AUTHENTICATED
U.S. GOVERNMENT
INFORMATION
GPO

FEDERAL REGISTER

Vol. 85 Tuesday,

No. 9 January 14, 2020

Pages 2003–2278

OFFICE OF THE FEDERAL REGISTER

The **FEDERAL REGISTER** (ISSN 0097–6326) is published daily, Monday through Friday, except official holidays, by the Office of the Federal Register, National Archives and Records Administration, under the Federal Register Act (44 U.S.C. Ch. 15) and the regulations of the Administrative Committee of the Federal Register (1 CFR Ch. I). The Superintendent of Documents, U.S. Government Publishing Office, is the exclusive distributor of the official edition. Periodicals postage is paid at Washington, DC.

The **FEDERAL REGISTER** provides a uniform system for making available to the public regulations and legal notices issued by Federal agencies. These include Presidential proclamations and Executive Orders, Federal agency documents having general applicability and legal effect, documents required to be published by act of Congress, and other Federal agency documents of public interest.

Documents are on file for public inspection in the Office of the Federal Register the day before they are published, unless the issuing agency requests earlier filing. For a list of documents currently on file for public inspection, see *www.federalregister.gov.*

The seal of the National Archives and Records Administration authenticates the Federal Register as the official serial publication established under the Federal Register Act. Under 44 U.S.C. 1507, the contents of the **Federal Register** shall be judicially noticed.

The **Federal Register** is published in paper and on 24x microfiche. It is also available online at no charge at *www.govinfo.gov*, a service of the U.S. Government Publishing Office.

The online edition of the **Federal Register** is issued under the authority of the Administrative Committee of the Federal Register as the official legal equivalent of the paper and microfiche editions (44 U.S.C. 4101 and 1 CFR 5.10). It is updated by 6:00 a.m. each day the **Federal Register** is published and includes both text and graphics from Volume 1, 1 (March 14, 1936) forward. For more information, contact the GPO Customer Contact Center, U.S. Government Publishing Office. Phone 202-512-1800 or 866-512-1800 (toll free). E-mail, *gpocusthelp.com.*

The annual subscription price for the **Federal Register** paper edition is $860 plus postage, or $929, for a combined **Federal Register, Federal Register** Index and List of CFR Sections Affected (LSA) subscription; the microfiche edition of the **Federal Register** including the **Federal Register** Index and LSA is $330, plus postage. Six month subscriptions are available for one-half the annual rate. The prevailing postal rates will be applied to orders according to the delivery method requested. The price of a single copy of the daily **Federal Register,** including postage, is based on the number of pages: $11 for an issue containing less than 200 pages; $22 for an issue containing 200 to 400 pages; and $33 for an issue containing more than 400 pages. Single issues of the microfiche edition may be purchased for $3 per copy, including postage. Remit check or money order, made payable to the Superintendent of Documents, or charge to your GPO Deposit Account, VISA, MasterCard, American Express, or Discover. Mail to: U.S. Government Publishing Office—New Orders, P.O. Box 979050, St. Louis, MO 63197-9000; or call toll free 1-866-512-1800, DC area 202-512-1800; or go to the U.S. Government Online Bookstore site, see *bookstore.gpo.gov.*

There are no restrictions on the republication of material appearing in the **Federal Register.**

How To Cite This Publication: Use the volume number and the page number. Example: 85 FR 12345.

Postmaster: Send address changes to the Superintendent of Documents, Federal Register, U.S. Government Publishing Office, Washington, DC 20402, along with the entire mailing label from the last issue received.

SUBSCRIPTIONS AND COPIES

PUBLIC

Subscriptions:

Paper or fiche	**202–512–1800**
Assistance with public subscriptions	**202–512–1806**

General online information **202–512–1530; 1–888–293–6498**

Single copies/back copies:

Paper or fiche	**202–512–1800**
Assistance with public single copies	**1–866–512–1800 (Toll-Free)**

FEDERAL AGENCIES

Subscriptions:

Assistance with Federal agency subscriptions:

Email	*FRSubscriptions@nara.gov*
Phone	**202–741–6000**

The Federal Register Printing Savings Act of 2017 (Pub. L. 115-120) placed restrictions on distribution of official printed copies of the daily **Federal Register** to members of Congress and Federal offices. Under this Act, the Director of the Government Publishing Office may not provide printed copies of the daily **Federal Register** unless a Member or other Federal office requests a specific issue or a subscription to the print edition. For more information on how to subscribe use the following website link: *https://www.gpo.gov/frsubs.*

Printed on recycled paper.

Contents

Federal Register

Vol. 85, No. 9

Tuesday, January 14, 2020

Agriculture Department
See Food Safety and Inspection Service
NOTICES
Agency Information Collection Activities; Proposals, Submissions, and Approvals, 2104–2105

Bureau of Consumer Financial Protection
RULES
Civil Penalty Inflation Adjustments, 2012–2014

Centers for Disease Control and Prevention
NOTICES
Meetings:
Disease, Disability, and Injury Prevention and Control Special Emphasis Panel, 2136

Centers for Medicare & Medicaid Services
NOTICES
Agency Information Collection Activities; Proposals, Submissions, and Approvals, 2136–2138

Civil Rights Commission
NOTICES
Meetings:
Delaware Advisory Committee, 2107–2108
District of Columbia Advisory Committee, 2106
New Jersey Advisory Committee, 2106–2107

Coast Guard
RULES
Safety Zones:
Waterway Training Areas, Captain of the Port Maryland—National Capital Region Zone, 2031–2033
Special Local Regulations:
Sector Upper Mississippi River Annual and Recurring Marine Events Update, 2027–2031
PROPOSED RULES
Special Local Regulations:
Recurring Marine Events, Sector St. Petersburg, 2069–2078
NOTICES
Request for Applications:
National Towing Safety Advisory Committee, 2139–2140

Commerce Department
See Foreign-Trade Zones Board
See International Trade Administration
See National Oceanic and Atmospheric Administration

Defense Acquisition Regulations System
PROPOSED RULES
Defense Federal Acquisition Regulation Supplement:
Noncommercial Computer Software, 2101–2103
NOTICES
Early Engagement Opportunity:
Implementation of National Defense Authorization Act for Fiscal Year 2020, 2112

Defense Department
See Defense Acquisition Regulations System
NOTICES
Meetings:
Defense Health Board, 2114–2115
Privacy Act; Systems of Records, 2112–2114

Education Department
RULES
Adjustment of Civil Monetary Penalties for Inflation, 2033–2036
NOTICES
Applications for New Awards:
Undergraduate International Studies and Foreign Language Program, 2115–2120

Energy Department
See Federal Energy Regulatory Commission
NOTICES
Renewals:
National Petroleum Council, 2120

Environmental Protection Agency
RULES
Authorization of State Hazardous Waste Management Program Revisions:
California, 2038
PROPOSED RULES
EPA Method 23—Determination of Polychlorinated Dibenzo-p-Dioxins and Polychlorinated Dibenzofurans from Stationary Sources, 2234–2277

Federal Aviation Administration
NOTICES
Agency Information Collection Activities; Proposals, Submissions, and Approvals:
Alternative Pilot Physical Examination and Education Requirements, 2228–2229

Federal Communications Commission
PROPOSED RULES
Modernizing Suspension and Debarment, 2078–2101
NOTICES
Agency Information Collection Activities; Proposals, Submissions, and Approvals, 2130–2132

Federal Deposit Insurance Corporation
NOTICES
Agency Information Collection Activities; Proposals, Submissions, and Approvals:
Information Collection for Innovation Pilot Programs, 2134–2135
Inflation Adjustments for Civil Money Penalties, 2132–2134

Federal Emergency Management Agency
RULES
Factors Considered when Evaluating a Governor's Request for Individual Assistance for a Major Disaster; Correction, 2038–2039

Federal Energy Regulatory Commission
RULES
Civil Monetary Penalty Inflation Adjustments, 2016–2018
NOTICES
Agency Information Collection Activities; Proposals, Submissions, and Approvals, 2126–2127
Application:
Bard College, NY, 2121

Dominion Energy Questar Pipeline, LLC, 2123–2124
JG Royal Mill, LLC and JJH Royal Mill, LLC, 2129–2130
Rivanna Water and Sewer Authority, 2125–2126
Southern California Edison Co., 2121–2122
Combined Filings, 2124, 2126–2128
Commission Half-Day Closing, 2130
Initial Market-Based Rate Filings Including Requests for Blanket Section 204 Authorizations:
Actual Energy, Inc., 2124–2125
Wilton Wind Energy I, LLC, 2123
Offer of Settlement:
Idaho Power Co., 2128–2129
Records Governing Off-the-Record Communications, 2129

Federal Motor Carrier Safety Administration
NOTICES
Marking of Commercial Motor Vehicles; Application for an Exemption Adirondak Trailways, Pine Hill Trailways, and New York Trailways, 2229–2230

Federal Reserve System
RULES
Rules of Practice for Hearings, 2007–2009

Federal Trade Commission
RULES
Adjustments to Civil Penalty Amounts, 2014–2016

Fish and Wildlife Service
NOTICES
Endangered and Threatened Species:
Initiation of 5-Year Status Review of Grizzly bear (Ursus arctos horribilis) in the conterminous United States, 2143–2144

Food and Drug Administration
RULES
Medical Devices:
Exemption From Premarket Notification; Class II Devices; Powered Wheeled Stretcher, 2018–2020

Food Safety and Inspection Service
NOTICES
Charter Renewal:
National Advisory Committee on Microbiological Criteria for Foods, 2105–2106

Foreign-Trade Zones Board
NOTICES
Application for Subzone:
Fisher Footwear, LLC, Foreign-Trade Zone 44, Mt. Olive, NJ, 2108–2109
Authorization of Production Activity:
DENSO Manufacturing Michigan, Inc., Battle Creek, MI, 2109
South Florida Lumber Co., Foreign-Trade Zone 281, Miami, FL, 2109
Proposed Production Activity:
Mitsubishi Caterpillar Forklift America, Inc., Foreign-Trade Zone 84, Houston, TX, 2108

General Services Administration
NOTICES
2020 Privately Owned Vehicle Mileage Reimbursement Rates; 2020 Standard Mileage Rate for Moving Purposes, 2135–2136

Health and Human Services Department
See Centers for Disease Control and Prevention
See Centers for Medicare & Medicaid Services
See Food and Drug Administration
See National Institutes of Health

Homeland Security Department
See Coast Guard
See Federal Emergency Management Agency
See U.S. Customs and Border Protection

Housing and Urban Development Department
PROPOSED RULES
Affirmatively Furthering Fair Housing, 2041–2061
NOTICES
Agency Information Collection Activities; Proposals, Submissions, and Approvals:
Ginnie Mae Multiclass Securities Program Documents, 2141–2143
White House Council on Eliminating Regulatory Barriers to Affordable Housing;, 2143

Interior Department
See Fish and Wildlife Service
See Land Management Bureau
See National Park Service
See Special Trustee for American Indians Office

Internal Revenue Service
PROPOSED RULES
Revised Applicability Dates for Regulations under Section 382(h) Related to Built-in Gain and Loss, 2061–2064

International Trade Administration
NOTICES
Antidumping or Countervailing Duty Investigations, Orders, or Reviews:
Certain Cold-Rolled Steel Flat Products from the People's Republic of China, 2109–2110
Meetings:
Renewable Energy and Energy Efficiency Advisory Committee, 2110

International Trade Commission
NOTICES
Complaint:
Certain Audio Players and Controllers, Components Thereof, and Products Containing the Same, 2147–2148
Investigations; Determinations, Modifications, and Rulings, etc.:
Steel Threaded Rod from China, 2147

Labor Department
See Mine Safety and Health Administration
See Workers Compensation Programs Office

Land Management Bureau
NOTICES
Meetings:
Bears Ears National Monument Advisory Committee, Utah, 2144–2145

Mine Safety and Health Administration
RULES
Electronic Detonators, 2022–2027
PROPOSED RULES
Electronic Detonators, 2064–2069

National Credit Union Administration
RULES
Civil Monetary Penalty Inflation Adjustment, 2009–2012
NOTICES
Agency Information Collection Activities; Proposals, Submissions, and Approvals, 2150

National Endowment for the Arts
NOTICES
Agency Information Collection Activities; Proposals, Submissions, and Approvals:
USArtists International Program Information Collection, 2150–2151

National Foundation on the Arts and the Humanities
See National Endowment for the Arts

National Institutes of Health
NOTICES
Meetings:
Center for Scientific Review, 2139
National Institute of Diabetes and Digestive and Kidney Diseases, 2139
National Institute on Aging, 2138–2139

National Oceanic and Atmospheric Administration
RULES
Fraser River Sockeye and Pink Salmon Fisheries; Inseason Orders, 2039–2040
NOTICES
Meetings:
Mid-Atlantic Fishery Management Council, 2111–2112
Public Hearings:
South Atlantic Fishery Management Council, 2111

National Park Service
NOTICES
National Register of Historic Places:
Pending Nominations and Related Actions, 2145–2146

Nuclear Regulatory Commission
NOTICES
Applications and Amendments to Facility Operating Licenses and Combined Licenses Involving No Significant Hazards Considerations:
Biweekly Notice, 2158–2163
Exemption; Issuance:
Holtec Pilgrim, LLC; Holtec Decommissioning International, LLC; Pilgrim Nuclear Power Station, 2153–2158
Meetings:
Advisory Committee on Reactor Safeguards, 2163–2164
Proposed Revision to Standard Review Plan:
Branch Technical Position 7–19; Guidance for Evaluation of Potential Common Cause Failure Due to Latent Software Defects in Digital Instrumentation and Control Systems, 2152–2153

Postal Service
RULES
Inspection Service Authority; Civil Monetary Penalty Inflation Adjustment, 2036–2037

Presidential Documents
EXECUTIVE ORDERS
Iran; Imposition of U.S. Sanctions Respecting Additional Sectors (EO 13902), 2003–2006

Securities and Exchange Commission
NOTICES
Order Making Fiscal Year 2020 Annual Adjustments to Transaction Fee Rates, 2218–2224
Order:
Exchanges and the Financial Industry Regulatory Authority to Submit New National Market System Plan Regarding Consolidated Equity Market Data, 2164–2187
Self-Regulatory Organizations; Proposed Rule Changes:
Consolidated Tape Association, 2193–2197, 2207–2212
Joint Industry Plan, 2202–2207, 2212–2218
National Securities Clearing Corp., 2187–2191, 2197–2202
New York Stock Exchange LLC, 2191–2192

Social Security Administration
NOTICES
Privacy Act; Systems of Records, 2224–2227

Special Trustee for American Indians Office
NOTICES
Agency Information Collection Activities; Proposals, Submissions, and Approvals:
Trust Funds for Tribes and Individual Indians, 2146–2147

State Department
RULES
2020 Civil Monetary Penalties Inflationary Adjustment, 2020–2022
NOTICES
Agency Information Collection Activities; Proposals, Submissions, and Approvals:
President's Emergency Plan for AIDS Relief Program Expenditures, 2227–2228
Culturally Significant Objects Imported for Exhibition:
Felix Feneon: The Anarchist and the Avant-Garde from Signac to Matisse and Beyond, 2227
Last Supper in Pompeii: Food and Wine from the Table to the Grave, 2227

Transportation Department
See Federal Aviation Administration
See Federal Motor Carrier Safety Administration
NOTICES
Agency Information Collection Activities; Proposals, Submissions, and Approvals:
Public Charters, 2230–2231

Treasury Department
See Internal Revenue Service

U.S. Customs and Border Protection
NOTICES
Commercial Gaugers and Laboratories; Approvals:
Saybolt LP (Mobile, AL), 2140–2141

Workers Compensation Programs Office
NOTICES
Agency Information Collection Activities; Proposals, Submissions, and Approvals, 2149–2150
Meetings:
Advisory Board on Toxic Substances and Worker Health, 2148–2149

Separate Parts In This Issue

Part II
Environmental Protection Agency, 2234–2277

Reader Aids

Consult the Reader Aids section at the end of this issue for phone numbers, online resources, finding aids, and notice of recently enacted public laws.

To subscribe to the Federal Register Table of Contents electronic mailing list, go to https://public.govdelivery.com/accounts/USGPOOFR/subscriber/new, enter your e-mail address, then follow the instructions to join, leave, or manage your subscription.

CFR PARTS AFFECTED IN THIS ISSUE

A cumulative list of the parts affected this month can be found in the Reader Aids section at the end of this issue.

3 CFR

Executive Orders:

13902 2003

12 CFR

263 2007
747 2009
1083 2012

16 CFR

1 2014

18 CFR

250 2016
385 2016

21 CFR

890 2018

22 CFR

35 2020
103 2020
127 2020
138 2020

24 CFR

Proposed Rules:

5 2041
91 2041
92 2041
570 2041
574 2041
576 2041
903 2041
905 2041

26 CFR

Proposed Rules:

1 2061

30 CFR

56 2022
57 2022

Proposed Rules:

56 2064
57 2064

33 CFR

100 2027
165 2031

Proposed Rules:

100 2069

34 CFR

36 2033
668 2033

39 CFR

233 2036

40 CFR

271 2038

Proposed Rules:

60 2234
63 2234
266 2234

44 CFR

206 2038

47 CFR

Proposed Rules:

16 2078

48 CFR

Proposed Rules:

227 2101
239 2101
252 2101

50 CFR

300 2039

Federal Register
Vol. 85, No. 9
Tuesday, January 14, 2020

Presidential Documents

Title 3—

The President

Executive Order 13902 of January 10, 2020

Imposing Sanctions With Respect to Additional Sectors of Iran

By the authority vested in me as President by the Constitution and the laws of the United States of America, including the International Emergency Economic Powers Act (50 U.S.C. 1701 *et seq.*) (IEEPA), the National Emergencies Act (50 U.S.C. 1601 *et seq.*) (NEA), section 212(f) of the Immigration and Nationality Act of 1952 (8 U.S.C. 1182(f)), and section 301 of title 3, United States Code,

I, DONALD J. TRUMP, President of the United States of America, find that Iran continues to be the world's leading sponsor of terrorism and that Iran has threatened United States military assets and civilians through the use of military force and support to Iranian-backed militia groups. It remains the policy of the United States to deny Iran all paths to a nuclear weapon and intercontinental ballistic missiles, and to counter the totality of Iran's malign influence in the region. In furtherance of these objectives, it is the policy of the United States to deny the Iranian government revenues, including revenues derived from the export of products from key sectors of Iran's economy, that may be used to fund and support its nuclear program, missile development, terrorism and terrorist proxy networks, and malign regional influence.

In light of these findings and in order to take further steps with respect to the national emergency declared in Executive Order 12957 of March 15, 1995, I hereby order:

Section 1. (a) All property and interests in property that are in the United States, that hereafter come within the United States, or that are or hereafter come within the possession or control of any United States person of the following persons are blocked and may not be transferred, paid, exported, withdrawn, or otherwise dealt in: any person determined by the Secretary of the Treasury, in consultation with the Secretary of State:

(i) to operate in the construction, mining, manufacturing, or textiles sectors of the Iranian economy, or any other sector of the Iranian economy as may be determined by the Secretary of the Treasury, in consultation with the Secretary of State;

(ii) to have knowingly engaged, on or after the date of this order, in a significant transaction for the sale, supply, or transfer to or from Iran of significant goods or services used in connection with a sector of the Iranian economy specified in, or determined by the Secretary of the Treasury, in consultation with the Secretary of State, pursuant to, subsection (a)(i) of this section;

(iii) to have materially assisted, sponsored, or provided financial, material, or technological support for, or goods or services to or in support of, any person whose property and interests in property are blocked pursuant to this order; or

(iv) to be owned or controlled by, or to have acted or purported to act for or on behalf of, directly or indirectly, any person whose property and interests in property are blocked pursuant to this order.

(b) The prohibitions in this section apply except to the extent provided by statutes, or in regulations, orders, directives, or licenses that may be

issued pursuant to this order, and notwithstanding any contract entered into or any license or permit granted before the date of this order.

Sec. 2. (a) The Secretary of the Treasury, in consultation with the Secretary of State, is hereby authorized to impose on a foreign financial institution the sanctions described in subsection (b) of this section upon determining that the foreign financial institution has, on or after the date of this order, knowingly conducted or facilitated any significant financial transaction:

(i) for the sale, supply, or transfer to or from Iran of significant goods or services used in connection with a sector of the Iranian economy specified in, or determined by the Secretary of the Treasury, in consultation with the Secretary of State, pursuant to, section 1(a)(i) of this order; or

(ii) for or on behalf of any person whose property and interests in property are blocked pursuant to section 1 of this order.

(b) With respect to any foreign financial institution determined by the Secretary of the Treasury, in consultation with the Secretary of State, in accordance with this section to meet the criteria set forth in subsection (a) of this section, the Secretary of the Treasury may prohibit the opening, and prohibit or impose strict conditions on the maintaining, in the United States of a correspondent account or a payable-through account by such foreign financial institution.

(c) The prohibitions in subsection (b) of this section apply except to the extent provided by statutes, or in regulations, orders, directives, or licenses that may be issued pursuant to this order, and notwithstanding any contract entered into or any license or permit granted before the date of this order.

Sec. 3. The unrestricted immigrant and nonimmigrant entry into the United States of aliens determined to meet one or more of the criteria in section 1(a) of this order would be detrimental to the interests of the United States, and the entry of such persons into the United States, as immigrants or nonimmigrants, is hereby suspended, except where the Secretary of State determines that the person's entry would not be contrary to the interests of the United States, including when the Secretary so determines, based on a recommendation of the Attorney General, that the person's entry would further important United States law enforcement objectives. In exercising this responsibility, the Secretary of State shall consult the Secretary of Homeland Security on matters related to admissibility or inadmissibility within the authority of the Secretary of Homeland Security. Such persons shall be treated in the same manner as persons covered by section 1 of Proclamation 8693 of July 24, 2011 (Suspension of Entry of Aliens Subject to United Nations Security Council Travel Bans and International Emergency Economic Powers Act Sanctions). The Secretary of State shall have the responsibility for implementing this section pursuant to such conditions and procedures as the Secretary has established or may establish pursuant to Proclamation 8693.

Sec. 4. I hereby determine that the making of donations of the types of articles specified in section 203(b)(2) of IEEPA (50 U.S.C. 1702(b)(2)) by, to, or for the benefit of any person whose property and interests in property are blocked pursuant to section 1 of this order would seriously impair the President's ability to deal with the national emergency declared in Executive Order 12957, and I hereby prohibit such donations as provided by section 1 of this order.

Sec. 5. The prohibitions in section 1 of this order include:

(a) the making of any contribution or provision of funds, goods, or services by, to, or for the benefit of any person whose property and interests in property are blocked pursuant to this order; and

(b) the receipt of any contribution or provision of funds, goods, or services from any such person.

Sec. 6. (a) Any transaction that evades or avoids, has the purpose of evading or avoiding, causes a violation of, or attempts to violate any of the prohibitions set forth in this order is prohibited.

(b) Any conspiracy formed to violate any of the prohibitions set forth in this order is prohibited.

Sec. 7. For the purposes of this order:

(a) The term ''entity'' means a partnership, association, trust, joint venture, corporation, group, subgroup, or other organization;

(b) the term ''foreign financial institution'' means any foreign entity that is engaged in the business of accepting deposits, making, granting, transferring, holding, or brokering loans or credits, or purchasing or selling foreign exchange, securities, commodity futures or options, or procuring purchasers and sellers thereof, as principal or agent. The term includes, but is not limited to, depository institutions, banks, savings banks, money service businesses, trust companies, securities brokers and dealers, commodity futures and options brokers and dealers, forward contract and foreign exchange merchants, securities and commodities exchanges, clearing corporations, investment companies, employee benefit plans, dealers in precious metals, stones, or jewels, and holding companies, affiliates, or subsidiaries of any of the foregoing. The term does not include the international financial institutions identified in 22 U.S.C. 262r(c)(2), the International Fund for Agricultural Development, the North American Development Bank, or any other international financial institution so notified by the Secretary of the Treasury;

(c) the term ''Government of Iran'' includes the Government of Iran, any political subdivision, agency, or instrumentality thereof, including the Central Bank of Iran, and any person owned or controlled by, or acting for or on behalf of, the Government of Iran;

(d) the term ''Iran'' means the Government of Iran and the territory of Iran and any other territory or marine area, including the exclusive economic zone and continental shelf, over which the Government of Iran claims sovereignty, sovereign rights, or jurisdiction, provided that the Government of Iran exercises partial or total de facto control over the area or derives a benefit from economic activity in the area pursuant to international arrangements;

(e) the term ''knowingly,'' with respect to conduct, a circumstance, or a result, means that a person has actual knowledge, or should have known, of the conduct, the circumstance, or the result;

(f) the term ''person'' means an individual or entity; and

(g) the term ''United States person'' means any United States citizen, permanent resident alien, entity organized under the laws of the United States or any jurisdiction within the United States (including foreign branches), or any person in the United States.

Sec. 8. For those persons whose property and interests in property are blocked pursuant to this order who might have a constitutional presence in the United States, I find that because of the ability to transfer funds or other assets instantaneously, prior notice to such persons of measures to be taken pursuant to this order would render those measures ineffectual. I therefore determine that for these measures to be effective in addressing the national emergency declared in Executive Order 12957, there need be no prior notice of a listing or determination made pursuant to this order.

Sec. 9. The Secretary of the Treasury, in consultation with the Secretary of State, is hereby authorized to take such actions, including the promulgation of rules and regulations, and to employ all powers granted to the President by IEEPA as may be necessary to carry out the purposes of this order. The Secretary of the Treasury may, consistent with applicable law, redelegate any of these functions within the Department of the Treasury. All departments and agencies of the United States shall take all appropriate measures within their authority to implement this order.

Sec. 10. (a) Nothing in this order shall be construed to impair or otherwise affect:

(i) the authority granted by law to an executive department or agency, or the head thereof; or

(ii) the functions of the Director of the Office of Management and Budget relating to budgetary, administrative, or legislative proposals.

(b) This order shall be implemented consistent with applicable law and subject to the availability of appropriations.

(c) This order is not intended to, and does not, create any right or benefit, substantive or procedural, enforceable at law or in equity by any party against the United States, its departments, agencies, or entities, its officers, employees, or agents, or any other person.

Sec. 11. This order shall not apply with respect to any person for conducting or facilitating a transaction for the provision (including any sale) of agricultural commodities, food, medicine, or medical devices to Iran.

Sec. 12. Nothing in this order shall prohibit transactions for the conduct of the official business of the United Nations (including its specialized agencies, programmes, funds, and related organizations) by employees, grantees, or contractors thereof.

Sec. 13. The measures taken pursuant to this order are in response to actions of the Government of Iran occurring after the conclusion of the 1981 Algiers Accords, and are intended solely as a response to those later actions.

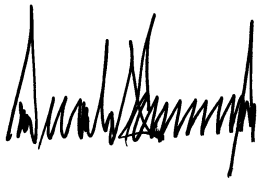

THE WHITE HOUSE,
January 10, 2020.

[FR Doc. 2020–00534
Filed 1–13–20; 8:45 am]
Billing code 3295–F0–P

Rules and Regulations

Federal Register
Vol. 85, No. 9
Tuesday, January 14, 2020

This section of the FEDERAL REGISTER contains regulatory documents having general applicability and legal effect, most of which are keyed to and codified in the Code of Federal Regulations, which is published under 50 titles pursuant to 44 U.S.C. 1510.

The Code of Federal Regulations is sold by the Superintendent of Documents.

FEDERAL RESERVE SYSTEM

12 CFR Part 263

[Docket No. R–1693]

RIN 7100AF–69

Rules of Practice for Hearings

AGENCY: Board of Governors of the Federal Reserve System.

ACTION: Final rule.

SUMMARY: The Board of Governors of the Federal Reserve System (the ''Board'') is issuing a final rule amending its rules of practice and procedure to adjust the amount of each civil money penalty (''CMP'') provided by law within its jurisdiction to account for inflation as required by the Federal Civil Penalties Inflation Adjustment Act Improvements Act of 2015.

DATES: This final rule is effective on January 14, 2020.

FOR FURTHER INFORMATION CONTACT: Thomas O. Kelly, Senior Counsel (202–974–7059), Legal Division, Board of Governors of the Federal Reserve System, 20th Street and Constitution Ave. NW, Washington, DC 20551. For users of Telecommunication Device for the Deaf (TDD) only, contact 202–263–4869.

SUPPLEMENTARY INFORMATION:

Federal Civil Penalties Inflation Adjustment Act

The Federal Civil Penalties Inflation Adjustment Act of 1990, 28 U.S.C. 2461 note (''FCPIA Act''), requires Federal agencies to adjust, by regulation, the CMPs within their jurisdiction to account for inflation. The Federal Civil Penalties Inflation Adjustment Act Improvements Act of 2015 (the ''2015 Act'') [1] amended the FCPIA Act to require Federal agencies to make annual adjustments not later than January 15 of every year.[2] The Board is now issuing a new final rule to set the CMP levels pursuant to the required annual adjustment for 2020. The Board will apply these adjusted maximum penalty levels to any penalties assessed on or after January 14, 2020, whose associated violations occurred on or after November 2, 2015. Penalties assessed for violations occurring prior to November 2, 2015 will be subject to the amounts set in the Board's 2012 adjustment pursuant to the FCPIA Act.[3]

Under the 2015 Act, the annual adjustment to be made for 2020 is the percentage by which the Consumer Price Index for the month of October 2019 exceeds the Consumer Price Index for the month of October 2018. On December 16, 2019, as directed by the 2015 Act, the Office of Management and Budget (OMB) issued guidance to affected agencies on implementing the required annual adjustment which included the relevant inflation multiplier.[4] Using OMB's multiplier, the Board calculated the adjusted penalties for its CMPs, rounding the penalties to the nearest dollar.[5]

Administrative Procedure Act

The 2015 Act states that agencies shall make the annual adjustment ''notwithstanding section 553 of title 5, United States Code.'' Therefore, this rule is not subject to the provisions of the Administrative Procedure Act (the ''APA''), 5 U.S.C. 553, requiring notice, public participation, and a deferred effective date.

Regulatory Flexibility Act

The Regulatory Flexibility Act, 5 U.S.C. 601 *et seq.,* requires a regulatory flexibility analysis only for rules for which an agency is required to publish a general notice of proposed rulemaking. Because the 2015 Act states that agencies' annual adjustments are to be made notwithstanding section 553 of title 5 of United States Code—the APA section requiring notice of proposed rulemaking—the Board is not publishing a notice of proposed rulemaking. Therefore, the Regulatory Flexibility Act does not apply.

Paperwork Reduction Act

There is no collection of information required by this final rule that would be subject to the Paperwork Reduction Act of 1995, 44 U.S.C. 3501 *et seq.*

List of Subjects in 12 CFR Part 263

Administrative practice and procedure, Claims, Crime, Equal access to justice, Lawyers, Penalties.

Authority and Issuance

For the reasons set forth in the preamble, the Board amends 12 CFR part 263 to read as follows:

PART 263—RULES OF PRACTICE FOR HEARINGS

■ 1. The authority citation for part 263 continues to read as follows:

Authority: 5 U.S.C. 504, 554–557; 12 U.S.C. 248, 324, 334, 347a, 504, 505, 1464, 1467, 1467a, 1817(j), 1818, 1820(k), 1829, 1831o, 1831p–1, 1832(c), 1847(b), 1847(d), 1884, 1972(2)(F), 3105, 3108, 3110, 3349, 3907, 3909(d), 4717; 15 U.S.C. 21, 78l(i), 78o–4, 78o–5, 78u–2; 1639e(k); 28 U.S.C. 2461 note; 31 U.S.C. 5321; and 42 U.S.C. 4012a.

■ 2. Section 263.65 is revised to read as follows:

§ 263.65 Civil money penalty inflation adjustments.

(a) *Inflation adjustments.* In accordance with the Federal Civil Penalties Inflation Adjustment Act Improvements Act of 2015, which further amended the Federal Civil Penalties Inflation Adjustment Act of 1990, the Board has set forth in paragraph (b) of this section the adjusted maximum amounts for each civil money penalty provided by law within the Board's jurisdiction. The authorizing statutes contain the complete provisions under which the Board may seek a civil money penalty. The adjusted civil money penalties apply only to penalties assessed on or after January 14, 2020, whose associated violations occurred on or after November 2, 2015.

(b) *Maximum civil money penalties.* The maximum (or, in the cases of 12 U.S.C. 334 and 1832(c), fixed) civil money penalties as set forth in the

[1] Public Law 114–74, 129 Stat. 599 (2015) (codified at 28 U.S.C. 2461 note).

[2] 28 U.S.C. 2461 note, sec. 4(b)(1).

[3] 77 FR 68680 (Nov. 16, 2012).

[4] OMB Memorandum M–20–05, *Implementation of Penalty Inflation Adjustments for 2020, Pursuant to the Federal Civil Penalties Inflation Adjustment Act Improvements Act of 2015* (Dec. 16, 2019).

[5] Under the 2015 Act and implementing OMB guidance, agencies are not required to make an adjustment to a CMP if, during the 12 months preceding the required adjustment, such penalty increased due to a law other than the 2015 Act by an amount greater than the amount of the required adjustment. No other laws have adjusted the CMPs within the Board's jurisdiction during the preceding 12 months.

referenced statutory sections are set forth in the table in this paragraph (b).

TABLE 1 TO PARAGRAPH (b)

Statute	Adjusted civil money penalty
12 U.S.C. 324:	
Inadvertently late or misleading reports, inter alia	$4,098
Other late or misleading reports, inter alia	40,979
Knowingly or reckless false or misleading reports, inter alia	2,048,915
12 U.S.C. 334	297
12 U.S.C. 374a	297
12 U.S.C. 504:	
First Tier	10,245
Second Tier	51,222
Third Tier	2,048,915
12 U.S.C. 505:	
First Tier	10,245
Second Tier	51,222
Third Tier	2,048,915
12 U.S.C. 1464(v)(4)	4,098
12 U.S.C. 1464(v)(5)	40,979
12 U.S.C. 1464(v)(6)	2,048,915
12 U.S.C. 1467a(i)(2)	51,222
12 U.S.C. 1467a(i)(3)	51,222
12 U.S.C. 1467a(r):	
First Tier	4,098
Second Tier	40,979
Third Tier	2,048,915
12 U.S.C. 1817(j)(16):	
First Tier	10,245
Second Tier	51,222
Third Tier	2,048,915
12 U.S.C. 1818(i)(2):	
First Tier	10,245
Second Tier	51,222
Third Tier	2,048,915
12 U.S.C. 1820(k)(6)(A)(ii)	337,016
12 U.S.C. 1832(c)	2,976
12 U.S.C. 1847(b)	51,222
12 U.S.C. 1847(d):	
First Tier	4,098
Second Tier	40,979
Third Tier	2,048,915
12 U.S.C. 1884	297
12 U.S.C. 1972(2)(F):	
First Tier	10,245
Second Tier	51,222
Third Tier	2,048,915
12 U.S.C. 3110(a)	46,825
12 U.S.C. 3110(c):	
First Tier	3,747
Second Tier	37,458
Third Tier	1,872,957
12 U.S.C. 3909(d)	2,549
15 U.S.C. 78u–2(b)(1):	
For a natural person	9,639
For any other person	96,384
15 U.S.C. 78u–2(b)(2):	
For a natural person	96,384
For any other person	481,920
15 U.S.C. 78u–2(b)(3):	
For a natural person	192,768
For any other person	963,837
15 U.S.C. 1639e(k)(1)	11,767
15 U.S.C. 1639e(k)(2)	23,533
42 U.S.C. 4012a(f)(5)	2,226

By order of the Board of Governors of the Federal Reserve System, under delegated authority, January 6, 2020.

Margaret McCloskey Shanks,

Deputy Secretary of the Board.

[FR Doc. 2020–00161 Filed 1–13–20; 8:45 am]

BILLING CODE 6210–01–P

NATIONAL CREDIT UNION ADMINISTRATION

12 CFR Part 747

RIN 3133–AF09

Civil Monetary Penalty Inflation Adjustment

AGENCY: National Credit Union Administration (NCUA).

ACTION: Final rule.

SUMMARY: The NCUA Board (Board) is amending its regulations to adjust the maximum amount of each civil monetary penalty (CMP) within its jurisdiction to account for inflation. This action, including the amount of the adjustments, is required under the Federal Civil Penalties Inflation Adjustment Act of 1990, as amended by the Debt Collection Improvement Act of 1996 and the Federal Civil Penalties Inflation Adjustment Act Improvements Act of 2015.

DATES: This final rule is effective January 14, 2020.

FOR FURTHER INFORMATION CONTACT: Gira Bose, Staff Attorney, at 1775 Duke Street, Alexandria, VA 22314, or telephone: (703) 518–6562.

SUPPLEMENTARY INFORMATION:

I. Legal Background
II. Calculation of Adjustments
III. Regulatory Procedures

I. Legal Background

A. Statutory Requirements

Every Federal agency, including the NCUA, is required by law to adjust its maximum CMP amounts each year to account for inflation. Prior to this being an annual requirement, agencies were required to adjust their CMPs at least once every four years.

The four-year requirement stemmed from the Debt Collection Improvement Act of 1996,[1] which amended the Federal Civil Penalties Inflation Adjustment Act of 1990.[2]

The annual requirement stems from the Bipartisan Budget Act of 2015,[3] which contains the Federal Civil Penalties Inflation Adjustment Act Improvements Act of 2015 (the 2015 amendments).[4] This legislation provided for an initial ''catch-up'' adjustment of CMPs in 2016, followed by annual adjustments. The catch-up adjustment reset CMP maximum amounts by setting aside the inflation adjustments that agencies made in prior years and instead calculated inflation with reference to the year when each CMP was enacted or last modified by Congress. Agencies were required to publish their catch-up adjustments in an interim final rule by July 1, 2016 and make them effective by August 1, 2016.[5] The NCUA complied with these requirements in a June 2016 interim final rule, followed by a November 2016 final rule to confirm the adjustments as final.[6]

The 2015 amendments also specified how agencies must conduct annual inflation adjustments after the 2016 catch-up adjustment. Following the catch-up adjustment, agencies must make the required adjustments and publish them in the **Federal Register** by January 15 each year.[7] For 2017, the NCUA issued an interim final rule on January 6, 2017,[8] followed by a final rule issued on June 23, 2017.[9] For 2018 and 2019, the NCUA issued a final rule in each year to satisfy the agency's requirement for the 2018 and 2019 annual adjustments.[10] This final rule satisfies the agency's requirement for the 2020 annual adjustment.

The law provides that the adjustments shall be made notwithstanding the section of the Administrative Procedure Act (APA) that requires prior notice and public comment for agency rulemaking.[11] The 2015 amendments also specify that each CMP maximum must be increased by the percentage by which the consumer price index for urban consumers (CPI–U)[12] for October of the year immediately preceding the year the adjustment is made exceeds the CPI–U for October of the prior year.[13] For example, for the adjustment to be made in 2020, an agency must compare the October 2018 and 2019 CPI–U figures.

An annual adjustment under the 2015 amendments is not required if a CMP has been amended in the preceding 12 months pursuant to other authority. Specifically, the statute provides that an agency is not required to make an annual adjustment to a CMP if in the preceding 12 months it has been increased by an amount greater than the annual adjustment required by the 2015 amendments.[14] The NCUA did not make any adjustments in the preceding 12 months pursuant to other authority, therefore, this rulemaking adjusts the NCUA's CMPs pursuant to the 2015 amendments.

B. Application to the 2020 Adjustments and Office of Management and Budget Guidance

This section applies the statutory requirements and the Office of Management and Budget's (OMB) guidance to the NCUA's CMPs, and sets forth the Board's calculation of the 2020 adjustments.

The 2015 amendments directed OMB to issue guidance to agencies on implementing the inflation adjustments.[15] OMB is required to issue its guidance each December and, with respect to the 2020 annual adjustment, did so on December 16, 2019.[16] For 2020, Federal agencies must adjust the maximum amounts of their CMPs by the percentage by which the October 2019 CPI–U (257.346) exceeds the October 2018 CPI–U (252.885). The resulting increase can be expressed as an inflation multiplier (1.01764) to apply to each current CMP maximum amount to determine the adjusted maximum. The OMB guidance also addresses rulemaking procedures and agency reporting and oversight requirements for CMPs.[17]

The table below presents the adjustment calculations. The current maximums are found at 12 CFR 747.1001, as adjusted by the final rule that the Board approved in January 2019. This amount is multiplied by the inflation multiplier to calculate the new maximum in the far right column. Only these adjusted maximum amounts, and not the calculations, will be codified at

[1] Public Law 104–134, Sec. 31001(s), 110 Stat. 1321–373 (Apr. 26, 1996). The law is codified at 28 U.S.C. 2461 note.

[2] Public Law 101–410, 104 Stat. 890 (Oct. 5, 1990), codified at 28 U.S.C. 2461 note.

[3] Public Law 114–74, 129 Stat. 584 (Nov. 2, 2015).

[4] 129 Stat. 599.

[5] Public Law 114–74, Sec. 701(b)(1), 129 Stat. 584, 599 (Nov. 2, 2015).

[6] 81 FR 40152 (June 21, 2016); 81 FR 78028 (Nov. 7, 2016).

[7] Public Law 114–74, Sec. 701(b)(1), 129 Stat. 584, 599 (Nov. 2, 2015).

[8] 82 FR 7640 (Jan. 23, 2017).

[9] 82 FR 29710 (June 30, 2017).

[10] 83 FR 2029 (Jan. 16, 2018); 84 FR 2055 (Feb. 6, 2019).

[11] Public Law 114–74, Sec. 701(b)(1), 129 Stat. 584, 599 (Nov. 2, 2015).

[12] This index is published by the Department of Labor, Bureau of Labor Statistics, and is available at its website: *http://www.bls.gov/cpi/.*

[13] Public Law 114–74, Sec. 701(b)(2)(B), 129 Stat. 584, 600 (Nov. 2, 2015).

[14] Public Law 114–74, Sec. 701(b)(1), 129 Stat. 584, 600 (Nov. 2, 2015).

[15] Public Law 114–74, Sec. 701(b)(4), 129 Stat. 584, 601 (Nov. 2, 2015).

[16] See OMB Memorandum M–20–05, Implementation of Penalty Inflation Adjustments for 2020, pursuant to the 2015 amendments (Dec. 16, 2019).

[17] Id.

12 CFR 747.1001 under this final rule. The adjusted amounts will be effective upon publication in the **Federal Register**, and can be applied to violations that occurred on or after November 2, 2015, the date the 2015 amendments were enacted.[18]

TABLE: CALCULATION OF MAXIMUM CMP ADJUSTMENTS

Citation	Description and tier[19]	Current maximum ($)	Multiplier	Adjusted maximum ($) (Current maximum × multiplier, rounded to nearest dollar)
12 U.S.C. 1782(a)(3)	Inadvertent failure to submit a report or the inadvertent submission of a false or misleading report.	4,027	1.01764	4,098.
12 U.S.C. 1782(a)(3)	Non-inadvertent failure to submit a report or the non-inadvertent submission of a false or misleading report.	40,269	1.01764	40,979.
12 U.S.C. 1782(a)(3)	Failure to submit a report or the submission of a false or misleading report done knowingly or with reckless disregard.	Lesser of 2,013,399 or 1% of total CU assets.	1.01764	Lesser of 2,048,915 or 1% of total CU assets.
12 U.S.C. 1782(d)(2)(A)	Tier 1 CMP for inadvertent failure to submit certified statement of insured shares and charges due to the National Credit Union Share Insurance Fund (NCUSIF), or inadvertent submission of false or misleading statement.	3,682	1.01764	3,747.
12 U.S.C. 1782(d)(2)(B)	Tier 2 CMP for non-inadvertent failure to submit certified statement or submission of false or misleading statement.	36,809	1.01764	37,458.
12 U.S.C. 1782(d)(2)(C)	Tier 3 CMP for failure to submit a certified statement or the submission of a false or misleading statement done knowingly or with reckless disregard.	Lesser of 1,840,491 or 1% of total CU assets.	1.01764	Lesser of 1,872,957 or 1% of total CU assets.
12 U.S.C. 1785(a)(3)	Non-compliance with insurance logo requirements.	125	1.01764	127.
12 U.S.C. 1785(e)(3)	Non-compliance with NCUA security requirements.	292	1.01764	297.
12 U.S.C. 1786(k)(2)(A)	Tier 1 CMP for violations of law, regulation, and other orders or agreements.	10,067	1.01764	10,245.
12 U.S.C. 1786(k)(2)(B)	Tier 2 CMP for violations of law, regulation, and other orders or agreements and for recklessly engaging in unsafe or unsound practices or breaches of fiduciary duty.	50,334	1.01764	51,222.
12 U.S.C. 1786(k)(2)(C)	Tier 3 CMP for knowingly committing the violations under Tier 1 or 2 (natural person).	2,013,399	1.01764	2,048,915.
12 U.S.C. 1786(k)(2)(C)	Tier 3 (same) (CU)	Lesser of 2,013,399 or 1% of total CU assets.	1.01764	Lesser of 2,048,915 or 1% of total CU assets.
12 U.S.C. 1786(w)(5)(A)(ii).	Non-compliance with senior examiner post-employment restrictions.	331,174	1.01764	337,016.
15 U.S.C. 1639e(k)	Non-compliance with appraisal independence standards (first violation).	11,563	1.01764	11,767.
15 U.S.C. 1639e(k)	Subsequent violations of the same	23,125	1.01764	23,533.
42 U.S.C. 4012a(f)(5)	Non-compliance with flood insurance requirements.	2,187	1.01764	2,226.

III. RegulatoryProcedures

A. Final Rule Under the APA

In the 2015 amendments, Congress provided that agencies shall make the required inflation adjustments in 2017 and subsequent years notwithstanding 5 U.S.C. 553,[20] which generally requires agencies to follow notice-and-comment procedures in rulemaking and to make rules effective no sooner than 30 days after publication in the **Federal Register**. The 2015 amendments provide a clear exception to these requirements.[21] In addition, the Board finds that notice-and-comment procedures would be impracticable and unnecessary under the APA because of the largely ministerial and technical nature of the rule, which affords agencies limited discretion in promulgating the rule, and the statutory deadline for making the adjustments.[22] In these circumstances, the Board finds good cause to issue a final rule without issuing a notice of proposed rulemaking or soliciting public comments. The Board also finds good cause to make the final rule effective upon publication because of the statutory deadline.

[18] Public Law 114–74, 129 Stat. 600 (Nov. 2, 2015).

[19] The table uses condensed descriptions of CMP tiers. Refer to the U.S. Code citations for complete descriptions.

[20] Public Law 114–74, Sec. 701(b)(1), 129 Stat. 584, 599 (Nov. 2, 2015).

[21] See 5 U.S.C. 559; Asiana Airlines v. Fed. Aviation Admin., 134 F.3d 393, 396–99 (DC Cir. 1998).

[22] 5 U.S.C. 553(b)(3)(B); see Mid-Tex Elec. Co-op., Inc. v. Fed. Energy Regulatory Comm'n, 822 F.2d 1123 (DC Cir. 1987).

Accordingly, this final rule is issued without prior notice and comment and will become effective immediately upon publication.

B. Regulatory Flexibility Act

The Regulatory Flexibility Act requires the Board to prepare an analysis to describe any significant economic impact a regulation may have on a substantial number of small entities.[23] For purposes of this analysis, the Board considers small credit unions to be those having under $100 million in assets.[24] This final rule will not have a significant economic impact on a substantial number of small credit unions because it affects only the maximum amounts of CMPs that may be assessed in individual cases, which are not numerous and generally do not involve assessments at the maximum level. In addition, several of the CMPs are limited to a percentage of a credit union's assets. Finally, in assessing CMPs, the Board generally must consider a party's financial resources.[25] Because this final rule will affect few, if any, small credit unions, the Board certifies that the final rule will not have a significant economic impact on a substantial number of small entities.

C. Paperwork Reduction Act

The Paperwork Reduction Act of 1995 (PRA) applies to rulemakings in which an agency creates a new paperwork burden on regulated entities or modifies an existing burden.[26] For purposes of the PRA, a paperwork burden may take the form of either a reporting or a recordkeeping requirement, both referred to as information collections. This final rule adjusts the maximum amounts of certain CMPs that the Board may assess against individuals, entities, or credit unions but does not require any reporting or recordkeeping. Therefore, this final rule will not create new paperwork burdens or modify any existing paperwork burdens.

D. Executive Order 13132

Executive Order 13132 encourages independent regulatory agencies to consider the impact of their actions on state and local interests. In adherence to fundamental federalism principles, the NCUA, an independent regulatory agency as defined in 44 U.S.C. 3502(5), voluntarily complies with the Executive order. This final rule adjusts the maximum amounts of certain CMPs that the Board may assess against individuals, entities, and federally insured credit unions, including state-chartered credit unions. However, the final rule does not create any new authority or alter the underlying statutory authorities that enable the Board to assess CMPs. Accordingly, this final rule will not have a substantial direct effect on the states, on the connection between the National Government and the states, or on the distribution of power and responsibilities among the various levels of government. The Board has determined that this final rule does not constitute a policy that has federalism implications for purposes of the Executive order.

E. Assessment of Federal Regulations and Policies on Families

The Board has determined that this final rule will not affect family well-being within the meaning of Section 654 of the Treasury and General Government Appropriations Act, 1999.[27]

F. Small Business Regulatory Enforcement Fairness Act

The Small Business Regulatory Enforcement Fairness Act of 1996[28] (SBREFA) provides generally for congressional review of agency rules. A reporting requirement is triggered in instances where the Board issues a final rule as defined by Section 551 of the APA.[29] The NCUA does not believe this rule is a ''major rule'' within the meaning of the relevant sections of SBREFA. As required by SBREFA, the NCUA submitted this final rule to OMB for it to determine if the final rule is a ''major rule'' for purposes of SBREFA. OMB determined the final rule was not a major rule. The NCUA also will file appropriate reports with Congress and the Government Accountability Office so this rule may be reviewed.

List of Subjects in 12 CFR Part 747

Credit unions, Civil monetary penalties.

By the National Credit Union Administration Board on January 7, 2020.

Gerard Poliquin,

Secretary of the Board.

For the reasons stated above, the NCUA Board amends 12 CFR part 747 as follows:

PART 747—ADMINISTRATIVE ACTIONS, ADJUDICATIVE HEARINGS, RULES OF PRACTICE AND PROCEDURE, AND INVESTIGATIONS

■ 1. The authority for part 747 continues to read as follows:

Authority: 12 U.S.C. 1766, 1782, 1784, 1785, 1786, 1787, 1790a, 1790d; 15 U.S.C. 1639e; 42 U.S.C. 4012a; Pub. L. 101–410; Pub. L. 104–134; Pub. L. 109–351; Pub. L. 114–74.

■ 2. Revise § 747.1001 to read as follows:

§ 747.1001 Adjustment of civil monetary penalties by the rate of inflation.

(a) The NCUA is required by the Federal Civil Penalties Inflation Adjustment Act of 1990 (Pub. L. 101–410, 104 Stat. 890, as amended (28 U.S.C. 2461 note)), to adjust the maximum amount of each civil monetary penalty (CMP) within its jurisdiction by the rate of inflation. The following chart displays those adjusted amounts, as calculated pursuant to the statute:

U.S. code citation	CMP description	New maximum amount
(1) 12 U.S.C. 1782(a)(3)	Inadvertent failure to submit a report or the inadvertent submission of a false or misleading report.	$4,098.
(2) 12 U.S.C. 1782(a)(3)	Non-inadvertent failure to submit a report or the non-inadvertent submission of a false or misleading report.	$40,979.
(3) 12 U.S.C. 1782(a)(3)	Failure to submit a report or the submission of a false or misleading report done knowingly or with reckless disregard.	$2,048,915 or 1 percent of the total assets of the credit union, whichever is less.
(4) 12 U.S.C. 1782(d)(2)(A)	Tier 1 CMP for inadvertent failure to submit certified statement of insured shares and charges due to the National Credit Union Share Insurance Fund (NCUSIF), or inadvertent submission of false or misleading statement.	$3,747.

[23] 5 U.S.C. 603(a).

[24] Interpretive Ruling and Policy Statement 15–1, 80 FR 57512 (Sept. 24, 2015).

[25] 12 U.S.C. 1786(k)(2)(G)(i).

[26] 44 U.S.C. 3507(d); 5 CFR part 1320.

[27] Public Law 105–277, 112 Stat. 2681 (Oct. 21, 1998).

[28] Public Law 104–121, 110 Stat. 857 (Mar. 29, 1996).

[29] 5 U.S.C. 551.

U.S. code citation	CMP description	New maximum amount
(5) 12 U.S.C. 1782(d)(2)(B)	Tier 2 CMP for non-inadvertent failure to submit certified statement or submission of false or misleading statement.	$37,458.
(6) 12 U.S.C. 1782(d)(2)(C)	Tier 3 CMP for failure to submit a certified statement or the submission of a false or misleading statement done knowingly or with reckless disregard.	$1,872,957 or 1 percent of the total assets of the credit union, whichever is less.
(7) 12 U.S.C. 1785(a)(3)	Non-compliance with insurance logo requirements	$127.
(8) 12 U.S.C. 1785(e) (3)	Non-compliance with NCUA security requirements	$297.
(9) 12 U.S.C. 1786(k)(2)(A)	Tier 1 CMP for violations of law, regulation, and other orders or agreements.	$10,245.
(10) 12 U.S.C. 1786(k)(2)(A)	Tier 2 CMP for violations of law, regulation, and other orders or agreements and for recklessly engaging in unsafe or unsound practices or breaches of fiduciary duty.	$51,222.
(11) 12 U.S.C. 1786(k)(2)(A)	Tier 3 CMP for knowingly committing the violations under Tier 1 or 2 (natural person).	$2,048,915.
(12) 12 U.S.C. 1786(k)(2)(A)	Tier 3 CMP for knowingly committing the violations under Tier 1 or 2 (insured credit union).	$2,048,915 or 1 percent of the total assets of the credit union, whichever is less.
(13) 12 U.S.C. 1786(w)(5)(ii)	Non-compliance with senior examiner post-employment restrictions	$337,016.
(14) 15 U.S.C. 1639e(k)	Non-compliance with appraisal independence requirements	First violation: $11,767. Subsequent violations: $23,533.
(15) 42 U.S.C. 4012a(f)(5)	Non-compliance with flood insurance requirements	$2,226.

(b) The adjusted amounts displayed in paragraph (a) of this section apply to civil monetary penalties that are assessed after the date the increase takes effect, including those whose associated violation or violations pre-dated the increase and occurred on or after November 2, 2015.

[FR Doc. 2020–00309 Filed 1–13–20; 8:45 am]

BILLING CODE 7535–01–P

BUREAU OF CONSUMER FINANCIAL PROTECTION

12 CFR Part 1083

Civil Penalty Inflation Adjustments

AGENCY: Bureau of Consumer Financial Protection.

ACTION: Final rule.

SUMMARY: The Bureau of Consumer Financial Protection (Bureau) is adjusting for inflation the maximum amount of each civil penalty within the Bureau's jurisdiction. These adjustments are required by the Federal Civil Penalties Inflation Adjustment Act of 1990, as amended by the Debt Collection Improvement Act of 1996 and further amended by the Federal Civil Penalties Inflation Adjustment Act Improvements Act of 2015 (Inflation Adjustment Act). The inflation adjustments mandated by the Inflation Adjustment Act serve to maintain the deterrent effect of civil penalties and to promote compliance with the law.

DATES: This final rule is effective January 15, 2020.

FOR FURTHER INFORMATION CONTACT: Rachel Ross, Attorney-Advisor; Kristen Phinnessee, Senior Counsel, Office of Regulations, at (202) 435–7700. If you require this document in an alternative electronic format, please contact *CFPB_Accessibility@cfpb.gov.*

SUPPLEMENTARY INFORMATION:

I. Background

The Federal Civil Penalties Inflation Adjustment Act of 1990,[1] as amended by the Debt Collection Improvement Act of 1996 [2] and further amended by the Federal Civil Penalties Inflation Adjustment Act Improvements Act of 2015 (Inflation Adjustment Act),[3] directs Federal agencies to adjust for inflation the civil penalty amounts within their jurisdiction not later than July 1, 2016, and then not later than January 15 every year thereafter.[4] Each agency was required to make the 2016 one-time catch-up adjustments through an interim final rule published in the **Federal Register**. On June 14, 2016, the Bureau published its interim final rule (IFR) to make the initial catch-up adjustments to civil penalties within the Bureau's jurisdiction.[5] The June 2016 IFR created a new part 1083 and in § 1083.1 established the inflation-adjusted maximum amounts for each civil penalty within the Bureau's jurisdiction.[6] The Bureau finalized the IFR on January 31, 2019.[7]

The Inflation Adjustment Act also requires subsequent adjustments to be made annually, not later than January 15, and notwithstanding section 553 of the Administrative Procedure Act (APA).[8] The Bureau annually adjusted its civil penalty amounts, as required by the Act, through rules issued in January 2017, January 2018, and January 2019.[9]

Specifically, the Act directs Federal agencies to adjust annually each civil penalty provided by law within the jurisdiction of the agency by the ''cost-of-living adjustment.'' [10] The ''cost-of-living adjustment'' is defined as the percentage (if any) by which the Consumer Price Index for all-urban consumers (CPI–U) for the month of October preceding the date of the adjustment, exceeds the CPI–U for October of the prior year.[11] The Director of the Office of Management and Budget (OMB) is required to issue guidance (OMB Guidance) every year by

[1] Public Law 101–410, 104 Stat. 890.

[2] Public Law 104–134, section 31001(s)(1), 110 Stat. 1321, 1321–373.

[3] Public Law 114–74, section 701, 129 Stat. 584, 599.

[4] Section 1301(a) of the Federal Reports Elimination Act of 1998, Public Law 105–362, 112 Stat. 3293, also amended the Inflation Adjustment Act by striking section 6, which contained annual reporting requirements, and redesignating section 7 as section 6, but did not alter the civil penalty adjustment requirements; 28 U.S.C. 2461 note.

[5] 81 FR 38569 (June 14, 2016). Although the Bureau was not obligated to solicit comments for the interim final rule, the Bureau invited public comment and received none.

[6] See 12 CFR 1083.1.

[7] 84 FR 517 (Jan. 31, 2019).

[8] Inflation Adjustment Act section 4, codified at 28 U.S.C. 2461 note. As discussed in guidance issued by the Director of the Office of Management and Budget (OMB), the APA generally requires notice, an opportunity for comment, and a delay in effective date for certain rulemakings, but the Inflation Adjustment Act provides that these procedures are not required for agencies to issue regulations implementing the annual adjustment. *See* Memorandum to the Exec. Dep'ts & Agencies from Russell T. Vought, Acting Director, Office of Mgmt. & Budget at 4 (Dec. 16, 2019), available at *https://www.whitehouse.gov/wp-content/uploads/2019/12/M-20-05.pdf.*

[9] 82 FR 3601 (Jan. 12, 2017); 83 FR 1525 (Jan. 12, 2018); 84 FR 517 (Jan. 31, 2019).

[10] Inflation Adjustment Act sections 4 and 5, codified at 28 U.S.C. 2461 note.

[11] Inflation Adjustment Act sections 3 and 5, codified at 28 U.S.C. 2461 note.

December 15 to agencies on implementing the annual civil penalty inflation adjustments. Pursuant to the Inflation Adjustment Act and OMB Guidance, agencies must apply the multiplier reflecting the ''cost-of-living adjustment'' to the current penalty amount and then round that amount to the nearest dollar to determine the annual adjustments.[12] The adjustments are designed to keep pace with inflation so that civil penalties retain their deterrent effect and promote compliance with the law.[13]

For the 2020 annual adjustment, the multiplier reflecting the ''cost-of-living adjustment'' is 1.01764.[14]

II. Adjustment

Pursuant to the Inflation Adjustment Act and OMB Guidance, the Bureau multiplied each of its civil penalty amounts by the ''cost-of-living adjustment'' multiplier and rounded to the nearest dollar.[15] The new penalty amounts that apply to civil penalties assessed after January 15, 2020, are as follows:

Law	Penalty description	Penalty amounts established under 2019 final rule	OMB ''cost-of-living adjustment'' multiplier	New penalty amount
Consumer Financial Protection Act, 12 U.S.C. 5565(c)(2)(A)	Tier 1 penalty	$5,781	1.01764	$5,883
Consumer Financial Protection Act, 12 U.S.C. 5565(c)(2)(B)	Tier 2 penalty	28,906	1.01764	29,416
Consumer Financial Protection Act, 12 U.S.C. 5565(c)(2)(C)	Tier 3 penalty	1,156,242	1.01764	1,176,638
Interstate Land Sales Full Disclosure Act, 15 U.S.C. 1717a(a)(2).	Per violation	2,014	1.01764	2,050
Interstate Land Sales Full Disclosure Act, 15 U.S.C. 1717a(a)(2).	Annual cap	2,013,399	1.01764	2,048,915
Real Estate Settlement Procedures Act, 12 U.S.C. 2609(d)(1).	Per failure	94	1.01764	96
Real Estate Settlement Procedures Act, 12 U.S.C. 2609(d)(1).	Annual cap	189,427	1.01764	192,768
Real Estate Settlement Procedures Act, 12 U.S.C. 2609(d)(2)(A).	Per failure, where intentional	190	1.01764	193
SAFE Act, 12 U.S.C. 5113(d)(2)	Per violation	29,192	1.01764	29,707
Truth in Lending Act, 15 U.S.C. 1639e(k)(1)	First violation	11,563	1.01764	11,767
Truth in Lending Act, 15 U.S.C. 1639e(k)(2)	Subsequent violations	23,125	1.01764	23,533

III. Procedural Requirements

A. Administrative Procedure Act

Under the Administrative Procedure Act, notice and opportunity for public comment are not required if the Bureau finds that notice and public comment are impracticable, unnecessary, or contrary to the public interest.[16] The adjustments to the civil penalty amounts are technical and non-discretionary, and they merely apply the statutory method for adjusting civil penalty amounts. These adjustments are required by the Inflation Adjustment Act. Moreover, the Inflation Adjustment Act directs agencies to adjust civil penalties annually notwithstanding section 553 of the APA,[17] and OMB Guidance reaffirms that agencies need not complete a notice-and-comment process before making the annual adjustments for inflation.[18] For these reasons, the Bureau has determined that publishing a notice of proposed rulemaking and providing opportunity for public comment are unnecessary. The amendments therefore are adopted in final form.

Section 553(d) of the APA generally requires publication of a final rule not less than 30 days before its effective date, except (1) a substantive rule which grants or recognizes an exemption or relieves a restriction; (2) interpretive rules and statements of policy; or (3) as otherwise provided by the agency for good cause found and published with the rule.[19] At minimum, the Bureau believes the annual adjustments to the civil penalty amounts in § 1083.1(a) fall under the third exception to section 553(d). The Bureau finds that there is good cause to make the amendments effective on January 15, 2020. The amendments to § 1083.1(a) in this final rule are technical and non-discretionary, and they merely apply the statutory method for adjusting civil penalty amounts and follow the statutory directive to make annual adjustments each year. Moreover, the Inflation Adjustment Act directs agencies to adjust the civil penalties annually notwithstanding section 553 of the APA,[20] and OMB Guidance reaffirms that agencies need not provide a delay in effective date for the annual adjustments for inflation.[21]

B. Regulatory Flexibility Act

Because no notice of proposed rulemaking is required, the Regulatory Flexibility Act does not require an initial or final regulatory flexibility analysis.[22]

C. Paperwork Reduction Act

The Bureau has determined that this final rule does not impose any new or revise any existing recordkeeping, reporting, or disclosure requirements on covered entities or members of the public that would be collections of information requiring approval by the

[12] Inflation Adjustment Act section 5, codified at 28 U.S.C. 2461 note; see also Memorandum to the Exec. Dep'ts & Agencies from Russell T. Vought, Acting Director, Office of Mgmt. & Budget (Dec. 16, 2019), available at *https://www.whitehouse.gov/wp-content/uploads/2019/12/M-20-05.pdf.*

[13] See Inflation Adjustment Act section 2, codified at 28 U.S.C. 2461 note.

[14] Memorandum to the Exec. Dep'ts & Agencies from Russell T. Vought, Acting Director, Office of Mgmt. & Budget (Dec. 16, 2019), available at *https://www.whitehouse.gov/wp-content/uploads/2019/12/M-20-05.pdf.*

[15] Inflation Adjustment Act section 4, codified at 28 U.S.C. 2461 note.

[16] 5 U.S.C. 553(b)(B).

[17] Inflation Adjustment Act section 4, codified at 28 U.S.C. 2461 note.

[18] Memorandum to the Exec. Dep'ts & Agencies from Russell T. Vought, Acting Director, Office of Mgmt. & Budget (Dec. 16, 2019), available at *https://www.whitehouse.gov/wp-content/uploads/2019/12/M-20-05.pdf.*

[19] 5 U.S.C. 553(d).

[20] Inflation Adjustment Act section 4, codified at 28 U.S.C. 2461 note.

[21] Memorandum to the Exec. Dep'ts & Agencies from Russell T. Vought, Acting Director, Office of Mgmt. & Budget (Dec. 16, 2019), available at *https://www.whitehouse.gov/wp-content/uploads/2019/12/M-20-05.pdf.*

[22] 5 U.S.C. 603(a), 604(a).

Office of Management and Budget under the Paperwork Reduction Act.[23]

D. Congressional Review Act

Pursuant to the Congressional Review Act (5 U.S.C. 801 *et seq.*), the Bureau will submit a report containing this rule and other required information to the United States Senate, the United States House of Representatives, and the Comptroller General of the United States prior to the rule taking effect. The Office of Information and Regulatory Affairs (OIRA) has designated this rule as not a ''major rule'' as defined by 5 U.S.C. 804(2).

List of Subjects in 12 CFR Part 1083

Administrative practice and procedure, Consumer protection, Penalties.

Authority and Issuance

For the reasons set forth in the preamble, the Bureau amends 12 CFR part 1083 as set forth below:

PART 1083—CIVIL PENALTY ADJUSTMENTS

■ 1. The authority citation for part 1083 continues to read as follows:

Authority: 12 U.S.C. 2609(d); 12 U.S.C. 5113(d)(2); 12 U.S.C. 5565(c); 15 U.S.C. 1639e(k); 15 U.S.C. 1717a(a); 28 U.S.C. 2461 note.

■ 2. Section 1083.1 is revised to read as follows:

§ 1083.1 Adjustment of civil penalty amounts.

(a) The maximum amount of each civil penalty within the jurisdiction of the Consumer Financial Protection Bureau to impose is adjusted in accordance with the Federal Civil Penalties Inflation Adjustment Act of 1990, as amended by the Debt Collection Improvement Act of 1996 and further amended by the Federal Civil Penalties Inflation Adjustment Act Improvements Act of 2015 (28 U.S.C. 2461 note), as follows:

Law	Penalty description	Adjusted maximum civil penalty amount
12 U.S.C. 5565(c)(2)(A)	Tier 1 penalty	$5,883
12 U.S.C. 5565(c)(2)(B)	Tier 2 penalty	29,416
12 U.S.C. 5565(c)(2)(C)	Tier 3 penalty	1,176,638
15 U.S.C. 1717a(a)(2)	Per violation	2,050
15 U.S.C. 1717a(a)(2)	Annual cap	2,048,915
12 U.S.C. 2609(d)(1)	Per failure	96
12 U.S.C. 2609(d)(1)	Annual cap	192,768
12 U.S.C. 2609(d)(2)(A)	Per failure, where intentional	193
12 U.S.C. 5113(d)(2)	Per violation	29,707
15 U.S.C. 1639e(k)(1)	First violation	11,767
15 U.S.C. 1639e(k)(2)	Subsequent violations	23,533

(b) The adjustments in paragraph (a) of this section shall apply to civil penalties assessed after January 15, 2020, whose associated violations occurred on or after November 2, 2015.

Dated: January 8, 2020.

Thomas Pahl,

Policy Associate Director, Bureau of Consumer Financial Protection.

[FR Doc. 2020–00364 Filed 1–13–20; 8:45 am]

BILLING CODE 4810–AM–P

[23] 44 U.S.C. 3501–3521.

FEDERAL TRADE COMMISSION

16 CFR Part 1

Adjustments to Civil Penalty Amounts

AGENCY: Federal Trade Commission.

ACTION: Final rule.

SUMMARY: The Federal Trade Commission (''FTC'' or ''Commission'') is implementing adjustments to the civil penalty amounts within its jurisdiction to account for inflation, as required by law.

DATES: Effective January 14, 2020.

FOR FURTHER INFORMATION CONTACT: Kenny A. Wright, Attorney, Office of the General Counsel, FTC, 600 Pennsylvania Avenue NW, Washington, DC 20580, (202–326–2907), *kwright@ftc.gov.*

SUPPLEMENTARY INFORMATION: The Federal Civil Penalties Inflation Adjustment Act Improvements Act of 2015 [1] directs agencies to adjust the civil penalty maximums under their jurisdiction for inflation every January. Accordingly, the Commission issues annual adjustments to the maximum civil penalty amounts under its jurisdiction.[2]

Commission Rule § 1.98 sets forth the applicable civil penalty amounts for violations of certain laws enforced by the Commission.[3] As directed by the FCPIAA, the Commission is issuing adjustments to increase these maximum civil penalty amounts to address inflation since its prior 2019 adjustment. The following adjusted amounts will take effect on January 14, 2020:

- Section 7A(g)(1) of the Clayton Act, 15 U.S.C. 18a(g)(1) (premerger filing notification violations under the Hart-Scott-Rodino Improvements Act)—Increase from $42,530 to $43,280;
- Section 11(*l*) of the Clayton Act, 15 U.S.C. 21(*l*) (violations of cease and desist orders issued under Clayton Act section 11(b))—Increase from $22,595 to $22,994;
- Section 5(*l*) of the FTC Act, 15 U.S.C. 45(*l*) (unfair or deceptive acts or practices)—Increase from $42,530 to $43,280;
- Section 5(m)(1)(A) of the FTC Act, 15 U.S.C. 45(m)(1)(A) (unfair or deceptive acts or practices)—Increase from $42,530 to $43,280;
- Section 5(m)(1)(B) of the FTC Act, 15 U.S.C. 45(m)(1)(B) (unfair or deceptive acts or practices)—Increase from $42,530 to $43,280;
- Section 10 of the FTC Act, 15 U.S.C. 50 (failure to file required reports)—Increase from $559 to $569;
- Section 5 of the Webb-Pomerene (Export Trade) Act, 15 U.S.C. 65 (failure by associations engaged solely in export

[1] Public Law 114–74, sec. 701, 129 Stat. 599 (2015). The Act amends the Federal Civil Penalties Inflation Adjustment Act (''FCPIAA''), Public Law 101–410, 104 Stat. 890 (codified at 28 U.S.C. 2461 note).

[2] 81 FR 42476 (June 30, 2016); 82 FR 8135 (2017); 83 FR 2902 (2018); 84 FR 3980 (2019).

[3] 16 CFR 1.98.

trade to file required statements)—Increase from $559 to $569;

- Section 6(b) of the Wool Products Labeling Act, 15 U.S.C. 68d(b) (failure by wool manufacturers to maintain required records)—Increase from $559 to $569;
- Section 3(e) of the Fur Products Labeling Act, 15 U.S.C. 69a(e) (failure to maintain required records regarding fur products)—Increase from $559 to $569;
- Section 8(d)(2) of the Fur Products Labeling Act, 15 U.S.C. 69f(d)(2) (failure to maintain required records regarding fur products)—Increase from $559 to $569;
- Section 333(a) of the Energy Policy and Conservation Act, 42 U.S.C. 6303(a) (knowing violations of EPCA sec. 332, including labeling violations)—Increase from $460 to $468;
- Section 525(a) of the Energy Policy and Conservation Act, 42 U.S.C. 6395(a) (recycled oil labeling violations)—Increase from $22,595 to $22,994;
- Section 525(b) of the Energy Policy and Conservation Act, 42 U.S.C. 6395(b) (willful violations of recycled oil labeling requirements)—Increase from $42,530 to $43,280;
- Section 621(a)(2) of the Fair Credit Reporting Act, 15 U.S.C. 1681s(a)(2) (knowing violations of the Fair Credit Reporting Act)—Increase from $3,993 to $4,063;
- Section 1115(a) of the Medicare Prescription Drug Improvement and Modernization Act of 2003, Pub. L. 108–173, as amended by Pub. L. 115–263, 21 U.S.C. 355 note (failure to comply with filing requirements)—Increase from $15,036 to $15,301; and
- Section 814(a) of the Energy Independence and Security Act of 2007, 42 U.S.C. 17304 (violations of prohibitions on market manipulation and provision of false information to federal agencies)—Increase from $1,210,340 to $1,231,690.

Calculation of Inflation Adjustments

The FCPIAA, as amended, directs federal agencies to adjust each civil monetary penalty under their jurisdiction for inflation in January of each year pursuant to a cost-of-living adjustment.[4] The cost-of-living adjustment is based on the percent change between the U.S. Department of Labor's Consumer Price Index for all-urban consumers (''CPI–U'') for the month of October preceding the date of the adjustment, and the CPI–U for October of the prior year.[5] Based on that formula, the cost-of-living adjustment multiplier for 2020 is 1.01764. The FCPIAA also directs that these penalty level adjustments should be rounded to the nearest dollar. Agencies do not have discretion over whether to adjust a maximum civil penalty, or the method used to determine the adjustment.

The following chart illustrates the application of these adjustments to the civil monetary penalties under the Commission's jurisdiction.

CALCULATION OF ADJUSTMENTS TO MAXIMUM CIVIL MONETARY PENALTIES

Citation	Description	2019 penalty level	Adjustment multiplier	2020 penalty level (rounded to the nearest dollar)
16 CFR 1.98(a): 15 U.S.C. 18a(g)(1)	Premerger filing notification violations	$42,530	1.01764	$43,280
16 CFR 1.98(b): 15 U.S.C. 21(*l*)	Violations of cease and desist orders	22,595	1.01764	22,994
16 CFR 1.98(c): 15 U.S.C. 45(*l*)	Unfair or deceptive acts or practices	42,530	1.01764	43,280
16 CFR 1.98(d): 15 U.S.C. 45(m)(1)(A)	Unfair or deceptive acts or practices	42,530	1.01764	43,280
16 CFR 1.98(e): 15 U.S.C. 45(m)(1)(B)	Unfair or deceptive acts or practices	42,530	1.01764	43,280
16 CFR 1.98(f): 15 U.S.C. 50	Failure to file required reports	559	1.01764	569
16 CFR 1.98(g): 15 U.S.C. 65	Failure to file required statements	559	1.01764	569
16 CFR 1.98(h): 15 U.S.C. 68d(b)	Failure to maintain required records	559	1.01764	569
16 CFR 1.98(i): 15 U.S.C. 69a(e)	Failure to maintain required records	559	1.01764	569
16 CFR 1.98(j): 15 U.S.C. 69f(d)(2)	Failure to maintain required records	559	1.01764	569
16 CFR 1.98(k): 42 U.S.C. 6303(a)	Knowing violations	460	1.01764	468
16 CFR 1.98(*l*): 42 U.S.C. 6395(a)	Recycled oil labeling violations	22,595	1.01764	22,994
16 CFR 1.98(*l*): 42 U.S.C. 6395(b)	Willful violations	42,530	1.01764	43,280
16 CFR 1.98(m): 15 U.S.C. 1681s(a)(2)	Knowing violations	3,993	1.01764	4,063
16 CFR 1.98(n): 21 U.S.C. 355 note	Non-compliance with filing requirements	15,036	1.01764	15,301
16 CFR 1.98(o): 42 U.S.C. 17304	Market manipulation or provision of false information to federal agencies.	1,210,340	1.01764	1,231,690

Effective Dates of New Penalties

These new penalty levels apply to civil penalties assessed after the effective date of the applicable adjustment, including civil penalties whose associated violation predated the effective date.[6] These adjustments do not retrospectively change previously assessed or enforced civil penalties that the FTC is actively collecting or has collected.

Procedural Requirements

The FCPIAA, as amended, directs agencies to adjust civil monetary penalties through rulemaking and to publish the required inflation adjustments in the **Federal Register**, notwithstanding section 553 of title 5, United States Code. Pursuant to this congressional mandate, prior public notice and comment under the APA and a delayed effective date are not required. For this reason, the requirements of the Regulatory Flexibility Act (''RFA'') also do not apply.[7] Further, this rule does not contain any collection of information requirements as defined by the Paperwork Reduction Act of 1995 as amended. 44 U.S.C. 3501 *et seq.*

Pursuant to the Congressional Review Act (5 U.S.C. 801 *et seq.*), the Office of Information and Regulatory Affairs

[4] 28 U.S.C. 2461 note (4).

[5] *Id.* (3), (5)(b); Office of Management and Budget, Memorandum M–20–05, *Implementation of Penalty Inflation Adjustments for 2020, Pursuant to the Federal Civil Penalties Inflation Adjustment Act Improvements Act of 2015* (December 16, 2019), available at: *https://www.whitehouse.gov/wp-content/uploads/2019/12/M-20-05.pdf.*

[6] 28 U.S.C. 2461 note (6).

[7] A regulatory flexibility analysis under the RFA is required only when an agency must publish a notice of proposed rulemaking for comment. *See* 5 U.S.C. 603.

designated this rule as not a ''major rule,'' as defined by 5 U.S.C. 804(2).

List of Subjects for 16 CFR Part 1

Administrative practice and procedure, Penalties, Trade practices.

Text of Amendments

For the reasons set forth in the preamble, the Federal Trade Commission amends title 16, chapter I, subchapter A, of the Code of Federal Regulations, as follows:

PART 1—GENERAL PROCEDURES

Subpart L—Civil Penalty Adjustments Under the Federal Civil Penalties Inflation Adjustment Act of 1990, as Amended

■ 1. The authority citation for part 1, subpart L, continues to read as follows:

Authority: 28 U.S.C. 2461 note.

■ 2. Revise § 1.98 to read as follows:

§ 1.98 Adjustment of civil monetary penalty amounts.

This section makes inflation adjustments in the dollar amounts of civil monetary penalties provided by law within the Commission's jurisdiction. The following maximum civil penalty amounts apply only to penalties assessed after January 14, 2020, including those penalties whose associated violation predated January 14, 2020.

(a) Section 7A(g)(1) of the Clayton Act, 15 U.S.C. 18a(g)(1)–$43,280;

(b) Section 11(*l*) of the Clayton Act, 15 U.S.C. 21(*l*)–$22,994;

(c) Section 5(*l*) of the FTC Act, 15 U.S.C. 45(*l*)–$43,280;

(d) Section 5(m)(1)(A) of the FTC Act, 15 U.S.C. 45(m)(1)(A)–$43,280;

(e) Section 5(m)(1)(B) of the FTC Act, 15 U.S.C. 45(m)(1)(B)–$43,280;

(f) Section 10 of the FTC Act, 15 U.S.C. 50–$569;

(g) Section 5 of the Webb-Pomerene (Export Trade) Act, 15 U.S.C. 65–$569;

(h) Section 6(b) of the Wool Products Labeling Act, 15 U.SC. 68d(b)–$569;

(i) Section 3(e) of the Fur Products Labeling Act, 15 U.S.C. 69a(e)–$569;

(j) Section 8(d)(2) of the Fur Products Labeling Act, 15 U.S.C. 69f(d)(2)–$569;

(k) Section 333(a) of the Energy Policy and Conservation Act, 42 U.S.C. 6303(a)–$468;

(l) Sections 525(a) and (b) of the Energy Policy and Conservation Act, 42 U.S.C. 6395(a) and (b), respectively–$22,994 and $43,280, respectively;

(m) Section 621(a)(2) of the Fair Credit Reporting Act, 15 U.S.C. 1681s(a)(2)–$4,063;

(n) Section 1115(a) of the Medicare Prescription Drug Improvement and Modernization Act of 2003, Public Law 108–173, as amended by Public Law 115–263, 21 U.S.C. 355 note–$15,301;

(o) Section 814(a) of the Energy Independence and Security Act of 2007, 42 U.S.C. 17304–$1,231,690; and

(p) Civil monetary penalties authorized by reference to the Federal Trade Commission Act under any other provision of law within the jurisdiction of the Commission—refer to the amounts set forth in paragraphs (c), (d), (e), and (f) of this section, as applicable.

By direction of the Commission.

April J. Tabor,

Acting Secretary.

[FR Doc. 2020–00314 Filed 1–13–20; 8:45 am]

BILLING CODE 6750–01–P

DEPARTMENT OF ENERGY

Federal Energy Regulatory Commission

18 CFR Parts 250 and 385

[Docket No. RM20–2–000; Order No. 865]

Civil Monetary Penalty Inflation Adjustments

AGENCY: Federal Energy Regulatory Commission, Department of Energy.

ACTION: Final rule.

SUMMARY: The Federal Energy Regulatory Commission (Commission) is issuing a final rule to amend its regulations governing the maximum civil monetary penalties assessable for violations of statutes, rules, and orders within the Commission's jurisdiction. The Federal Civil Penalties Inflation Adjustment Act of 1990, as amended most recently by the Federal Civil Penalties Inflation Adjustment Act Improvements Act of 2015, requires the Commission to issue this final rule.

DATES: This final rule is effective January 14, 2020.

FOR FURTHER INFORMATION CONTACT: Todd Hettenbach, Attorney, Office of Enforcement, Federal Energy Regulatory Commission, 888 First Street NE, Washington, DC 20426, (202) 502–8794, *Todd.Hettenbach@ferc.gov.*

SUPPLEMENTARY INFORMATION:

1. In this final rule, the Federal Energy Regulatory Commission (Commission) is complying with its statutory obligation to amend the civil monetary penalties provided by law for matters within the agency's jurisdiction.

I. Background

2. The Federal Civil Penalties Inflation Adjustment Act Improvements Act of 2015 (2015 Adjustment Act),[1] which further amended the Federal Civil Penalties Inflation Adjustment Act of 1990 (1990 Adjustment Act),[2] required the head of each Federal agency to issue a rule by July 2016 adjusting for inflation each ''civil monetary penalty''provided by law within the agency's jurisdiction and to make further inflation adjustments on an annual basis every January 15 thereafter.[3]

II. Discussion

3. The 2015 Adjustment Act defines a civil monetary penalty as any penalty, fine, or other sanction that: (A)(i) Is for a specific monetary amount as provided by Federal law; or (ii) has a maximum amount provided for by Federal law; (B) is assessed or enforced by an agency pursuant to Federal law; and (C) is assessed or enforced pursuant to an administrative proceeding or a civil action in the Federal courts.[4] This definition applies to the maximum civil penalties that may be imposed under the Federal Power Act (FPA),[5] the Natural Gas Act (NGA),[6] the Natural Gas Policy Act of 1978 (NGPA),[7] and the Interstate Commerce Act (ICA).[8]

4. Under the 2015 Adjustment Act, the first step for such adjustment of a civil monetary penalty for inflation requires determining the percentage by which the U.S. Department of Labor's Consumer Price Index for all-urban consumers (CPI–U) for October of the preceding year exceeds the CPI–U for October of the year before that.[9]

The CPI–U for October 2019 exceeded the CPI–U for October 2018 by 1.764 percent.[10]

5. The second step requires multiplying the CPI–U percentage increase by the applicable existing maximum civil monetary penalty.[11]

---

[1] Sec. 701, Public Law 114–74, 129 Stat. 584, 599.

[2] Public Law 101–410, 104 Stat. 890 (codified as amended at 28 U.S.C. 2461 note).

[3] 28 U.S.C. 2461 note, at (4). The Commission made its January 2019 adjustment on January 8, 2019, in Docket No. RM19–9–000. *See Civil Monetary Penalty Inflation Adjustments,* Order No. 853, 84 FR 966 (Feb. 1, 2019), FERC Stats. & Regs. ¶ 31,408 (2019).

[4] *Id.* (3).

[5] 16 U.S.C. 791a *et seq.*

[6] 15 U.S.C. 717 *et seq.*

[7] 15 U.S.C. 3301 *et seq.*

[8] 49 App. U.S.C. 1 *et seq.* (1988).

[9] 28 U.S.C. 2461 note, at (5)(b)(1).

[10] *See, e.g.,* Memorandum from Russell T. Vought, Office of Management and Budget, Implementation of the Penalty Inflation Adjustments for 2019, Pursuant to the Federal Civil Penalties Inflation Adjustment Act Improvements Act of 2015 (Dec. 16, 2019).

[11] *Id.* (5)(a).

This step results in a base penalty increase amount.

6. The third step requires rounding the base penalty increase amount to the nearest dollar and adding that amount to the base penalty to calculate the new adjusted maximum civil monetary penalty.[12]

7. Under the 2015 Adjustment Act, an agency is directed to use the maximum civil monetary penalty applicable at the time of assessment of a civil penalty, regardless of the date on which the violation occurred.[13]

8. The adjustments that the Commission is required to make pursuant to the 2015 Adjustment Act are reflected in the following table:

Source	Existing maximum civil monetary penalty	New adjusted maximum civil monetary penalty
16 U.S.C. 825o–1(b), Sec. 316A of the Federal Power Act	$1,269,500 per violation, per day	$1,291,894 per violation, per day.
16 U.S.C. 823b(c), Sec. 31(c) of the Federal Power Act	$22,927 per violation, per day	$23,331 per violation, per day.
16 U.S.C. 825n(a), Sec. 315(a) of the Federal Power Act	$2,994 per violation	$3,047 per violation.
15 U.S.C. 717t–1, Sec. 22 of the Natural Gas Act	$1,269,500 per violation, per day	$1,291,894 per violation, per day.
15 U.S.C. 3414(b)(6)(A)(i), Sec. 504(b)(6)(A)(i) of the Natural Gas Policy Act of 1978.	$1,269,500 per violation, per day	$1,291,894 per violation, per day.
49 App. U.S.C. 6(10) (1988), Sec. 6(10) of the Interstate Commerce Act.	$1,329 per offense and $67 per day after the first day.	$1,352 per offense and $68 per day after the first day.
49 App. U.S.C. 16(8) (1988), Sec. 16(8) of the Interstate Commerce Act.	$13,291 per violation, per day	$13,525 per violation, per day.
49 App. U.S.C. 19a(k) (1988), Sec. 19a(k) of the Interstate Commerce Act.	$1,329 per offense, per day	$1,352 per offense, per day.
49 App. U.S.C. 20(7)(a) (1988), Sec. 20(7)(a) of the Interstate Commerce Act.	$1,329 per offense, per day	$1,352 per offense, per day.

III. Administrative Findings

9. Congress directed that agencies issue final rules to adjust their maximum civil monetary penalties notwithstanding the requirements of the Administrative Procedure Act (APA).[14] Because the Commission is required by law to undertake these inflation adjustments notwithstanding the notice and comment requirements that otherwise would apply pursuant to the APA, and because the Commission lacks discretion with respect to the method and amount of the adjustments, prior notice and comment would be impractical, unnecessary, and contrary to the public interest.

IV. Regulatory Flexibility Statement

10. The Regulatory Flexibility Act, as amended, requires agencies to certify that rules promulgated under their authority will not have a significant economic impact on a substantial number of small businesses.[15] The requirements of the Regulatory Flexibility Act apply only to rules promulgated following notice and comment.[16] The requirements of the Regulatory Flexibility Act do not apply to this rulemaking because the Commission is issuing this final rule without notice and comment.

V. Paperwork Reduction Act

11. This rule does not require the collection of information. The Commission is therefore not required to submit this rule for review to the Office of Management and Budget pursuant to the Paperwork Reduction Act of 1995.[17]

VI. Document Availability

12. In addition to publishing the full text of this document in the **Federal Register**, the Commission provides all interested persons an opportunity to view and print the contents of this document via the internet through the Commission's Home Page (*http://www.ferc.gov*) and in the Commission's Public Reference Room during normal business hours (8:30 a.m. to 5:00 p.m. Eastern time) at 888 First Street NE, Room 2A, Washington DC 20426.

13. From the Commission's Home Page on the internet, this information is available on eLibrary. The full text of this document is available on eLibrary in PDF and Microsoft Word format for viewing, printing, and downloading. To access this document in eLibrary, type the docket number (excluding the last three digits) in the docket number field.

14. User assistance is available for eLibrary and the Commission's website during normal business hours from the Commission's Online Support at (202) 502–6652 (toll free at 1–866–208–3676) or email at *ferconlinesupport@ferc.gov,* or the Public Reference Room at (202) 502–8371, TTY (202) 502–8659, *public.referenceroom@ferc.gov.*

VII. Effective Date and Congressional Notification

15. For the same reasons the Commission has determined that public notice and comment are unnecessary, impractical, and contrary to the public interest, the Commission finds good cause to adopt an effective date that is less than 30 days after the date of publication in the **Federal Register** pursuant to the Administrative Procedure Act,[18] and therefore, the regulation is effective upon publication in the **Federal Register**.

16. The Commission has determined, with the concurrence of the Administrator of the Office of Information and Regulatory Affairs of the Office of Management and Budget, that this rule is not a ''major rule'' as defined in section 351 of the Small Business Regulatory Enforcement Fairness Act of 1996. This final rule is being submitted to the Senate, House, and Government Accountability Office.

List of Subjects

18 CFR Part 250

Natural gas, Reporting and recordkeeping requirements.

18 CFR Part 385

Administrative practice and procedure, Electric power, Penalties, Pipelines, Reporting and recordkeeping requirements.

By the Commission.

Issued: January 2, 2020.

Nathaniel J. Davis, Sr.,

Deputy Secretary.

In consideration of the foregoing, the Commission amends parts 250 and 385, chapter I, title 18, *Code of Federal Regulations* as follows:

[12] *Id.*

[13] *Id.* (6).

[14] *Id.* (3)(b)(2).

[15] 5 U.S.C. 601 *et seq.*

[16] 5 U.S.C. 603, 604.

[17] 44 U.S.C. 3507(d).

[18] 5 U.S.C. 553(d)(3).

PART 250—FORMS

■ 1. The authority citation for part 250 continues to read as follows:

Authority: 15 U.S.C. 717–717w, 3301–3432; 42 U.S.C. 7101–7352; 28 U.S.C. 2461 note.

■ 2. Amend § 250.16 by revising paragraph (e)(1) to read as follows:

§ 250.16 Format of compliance plan transportation services and affiliate transactions.

* * * * *

(e) *Penalty for failure to comply.* (1) Any person who transports gas for others pursuant to subpart B or G of part 284 of this chapter and who knowingly violates the requirements of §§ 358.4 and 358.5 of this chapter, this section, or § 284.13 of this chapter will be subject, pursuant to sections 311(c), 501, and 504(b)(6) of the Natural Gas Policy Act of 1978, to a civil penalty, which the Commission may assess, of not more than $1,291,894 for any one violation.

* * * * *

PART 385—RULES OF PRACTICE AND PROCEDURE

■ 3. The authority citation for part 385 is revised to read as follows:

Authority: 5 U.S.C. 551–557; 15 U.S.C. 717–717w, 3301–3432; 16 U.S.C. 791a–825v, 2601–2645; 28 U.S.C. 2461; 31 U.S.C 3701, 9701; 42 U.S.C. 7101–7352, 16441, 16451–16463; 49 U.S.C. 60502; 49 App. U.S.C. 1–85 (1988); 28 U.S.C. 2461 note (1990); 28 U.S.C. 2461 note (2015).

■ 4. Revise § 385.1504(a) to read as follows:

§ 385.1504 Maximum civil penalty (Rule 1504).

(a) Except as provided in paragraph (b) of this section, the Commission may assess a civil penalty of up to $23,331 for each day that the violation continues.

* * * * *

■ 5. Revise § 385.1602 to read as follows:

§ 385.1602 Civil penalties, as adjusted (Rule 1602).

The current inflation-adjusted civil monetary penalties provided by law within the jurisdiction of the Commission are:

(a) 15 U.S.C. 3414(b)(6)(A)(i), Natural Gas Policy Act of 1978: $1,291,894.

(b) 16 U.S.C. 823b(c), Federal Power Act: $23,331 per day.

(c) 16 U.S.C. 825n(a), Federal Power Act: $3,047.

(d) 16 U.S.C. 825o–1(b), Federal Power Act: $1,291,894 per day.

(e) 15 U.S.C. 717t–1, Natural Gas Act: $1,291,894 per day.

(f) 49 App. U.S.C. 6(10) (1988), Interstate Commerce Act: $1,352 per offense and $68 per day after the first day.

(g) 49 App. U.S.C. 16(8) (1988), Interstate Commerce Act: $13,525 per day.

(h) 49 App. U.S.C. 19a(k) (1988), Interstate Commerce Act: $1,352 per day.

(i) 49 App. U.S.C. 20(7)(a) (1988), Interstate Commerce Act: $1,352 per day.

[FR Doc. 2020–00239 Filed 1–13–20; 8:45 am]

BILLING CODE 6717–01–P

DEPARTMENT OF HEALTH AND HUMAN SERVICES

Food and Drug Administration

21 CFR Part 890

[Docket No. FDA–2019–P–3347]

Medical Devices; Exemption From Premarket Notification; Class II Devices; Powered Wheeled Stretcher

AGENCY: Food and Drug Administration, HHS.

ACTION: Final amendment; final order.

SUMMARY: The Food and Drug Administration (FDA or Agency) is publishing an order granting a petition requesting exemption from premarket notification (510(k)) requirements for powered wheeled stretchers (product code INK). These devices are battery-powered tables with wheels that are intended for medical purposes for use by patients who are unable to propel themselves independently and who must maintain a prone or supine position for prolonged periods because of skin ulcers or contractures (muscle contractions). This order exempts powered wheeled stretchers, class II devices, from 510(k) requirements, subject to certain conditions for exemption. This exemption from 510(k) requirements is immediately in effect for powered wheeled stretchers. FDA is publishing this order in accordance with the section of the Federal Food, Drug, and Cosmetic Act (FD&C Act) permitting the exemption of a device from the requirement to submit a 510(k).

DATES: This order is effective January 14, 2020.

FOR FURTHER INFORMATION CONTACT: Eric Franca, Center for Devices and Radiological Health, Food and Drug Administration, 10903 New Hampshire Ave., Bldg. 66, Rm. 1655, Silver Spring, MD 20993–0002, 301–796–4505, *eric.franca@fda.hhs.gov.*

SUPPLEMENTARY INFORMATION:

I. Statutory Background

Section 510(k) of the FD&C Act (21 U.S.C. 360(k)) and its implementing regulations in part 807, subpart E (21 CFR part 807, subpart E) require persons who propose to begin the introduction or delivery for introduction into interstate commerce for commercial distribution of a device intended for human use to submit a 510(k) to FDA. The device may not be marketed until FDA finds it ''substantially equivalent'' within the meaning of section 513(i) of the FD&C Act (21 U.S.C. 360c(i)) to a legally marketed device that does not require premarket approval.

On November 21, 1997, the President signed into law the Food and Drug Administration Modernization Act of 1997 (Pub. L. 105–115), section 206 of which added section 510(m) to the FD&C Act, which was amended on December 13, 2016, by the 21st Century Cures Act (Pub. L. 114–255). Section 510(m)(1) of the FD&C Act requires FDA to publish in the **Federal Register** a notice that contains a list of each type of class II device that does not require a report under section 510(k) of the FD&C Act to provide reasonable assurance of safety and effectiveness of the device. Section 510(m) of the FD&C Act further provides that a 510(k) will no longer be required for these devices upon the date of publication of the list in the **Federal Register**. FDA published that list in the **Federal Register** of January 21, 1998 (63 FR 3142).

Section 510(m)(2) of the FD&C Act provides that FDA may exempt a device from 510(k) requirements on its own initiative, or upon petition of an interested person, if FDA determines that a 510(k) is not necessary to assure the safety and effectiveness of the device. This section requires FDA to publish in the **Federal Register** a notice of intent to exempt a device, or of the petition, and to provide a 60-calendar-day period for public comment. Within 120 days after the issuance of the notice, FDA shall publish an order in the **Federal Register** setting forth the final determination regarding the exemption of the device that was the subject of the notice. If FDA fails to respond to a petition under this section within 180 days of receiving it, the petition shall be deemed granted.

II. Criteria for Exemption

There are a number of factors FDA may consider to determine whether a 510(k) is necessary to assure the safety and effectiveness of a class II device. These factors are discussed in the guidance that the Agency issued on

February 19, 1998, entitled ''Procedures for Class II Device Exemptions from Premarket Notification'' (Class II 510(k) Exemption Guidance). That guidance can be obtained through the internet at *https://www.fda.gov/downloads/MedicalDevices/DeviceRegulationandGuidance/GuidanceDocuments/UCM080199.pdf* or by sending an email request to *CDRH-Guidance@fda.hhs.gov* to receive a copy of the document. Please use the document number 159 to identify the guidance you are requesting.

III. Petition

On July 10, 2019, FDA received a petition requesting an exemption from premarket notification for powered wheeled stretchers (see Docket No. FDA–2019–P–3347). These devices are currently classified under 21 CFR 890.3690, powered wheeled stretchers.

In the **Federal Register** of September 16, 2019 (84 FR 48623), FDA published a notice announcing that this petition had been received and provided opportunity for interested persons to submit comments on the petition by November 15, 2019. FDA received no comments.

FDA has assessed the need for 510(k) clearance for this type of device against the criteria laid out in the Class II 510(k) Exemption Guidance. Based on this review, FDA believes that premarket notification is not necessary to assure the safety and effectiveness of the device, as long as certain conditions are met. FDA believes that the risks posed by the device and the characteristics of the device necessary for its safe and effective performance are well established. FDA believes that changes in the device that could affect safety and effectiveness will be readily detectable by visual examination. Therefore, after reviewing the petition, FDA has determined that premarket notification is not necessary to assure the safety and effectiveness of powered wheeled stretchers, as long as the conditions in section IV are met. FDA responded to the petition by letter dated December 31, 2019, to inform the petitioner of this decision within the 180-day timeframe under section 510(m)(2) of the FD&C Act.

IV. Conditions for Exemption

This final order provides conditions for exemption from premarket notification for the powered wheeled stretcher.[1] The conditions that must be met for the device to be 510(k)-exempt are as follows: Appropriate analysis and nonclinical testing must demonstrate that the safety controls are adequate to ensure safe use of the device and prevent user falls from the device in the event of a device failure; appropriate analysis and nonclinical testing must demonstrate the ability of the device to withstand the rated user weight load with an appropriate factor of safety; appropriate analysis and nonclinical testing must demonstrate the longevity of the device to withstand external forces applied to the device and provide the user with an expected service life of the device; appropriate analysis and nonclinical testing must demonstrate proper environments of use and storage of the device to maximize the longevity of the device; appropriate analysis and nonclinical testing (such as outlined in appropriate FDA-recognized consensus standards) must validate electromagnetic compatibility and electrical safety; appropriate analysis and nonclinical testing (such as outlined in appropriate FDA-recognized consensus standards) must validate that the skin-contacting components of the device are biocompatible; appropriate analysis and nonclinical testing (such as outlined in appropriate FDA-recognized consensus standards) must validate the software life cycle and that all processes, activities, and tasks are implemented and documented; appropriate analysis and nonclinical testing must validate that the device components are found to be nonflammable; appropriate analysis and nonclinical testing (such as outlined in appropriate FDA-recognized consensus standards) must validate that the battery in the device performs as intended over the anticipated service life of the device; adequate labeling is provided to the user to document proper use and maintenance of the device to ensure safe use of the device in the intended use environment; and appropriate risk assessment including, but not limited to, evaluating the dimensional limits of the gaps in hospital beds and mitigation strategy to reduce entrapment.

A number of these conditions involve ''appropriate analysis and nonclinical testing,'' the details of which are outlined in, among other places, certain FDA-recognized consensus standards. The following is a list of FDA recognized consensus standards that may be used to meet the listed conditions of exemption. Specifically, those standards include FDA-recognized editions of:

- *ANSI/AAMI ES60601–1:* Medical electrical equipment—Part 1: General requirements for basic safety and essential performance
- *ANSI/AAMI/IEC 60601–1–2:* Medical electrical equipment—Part 1–2: General requirements for basic safety and essential performance—Collateral Standard: Electromagnetic disturbances—Requirements and tests
- *ISO 7176–14:* Wheelchairs—Part 14: Power and control systems for electrically powered wheelchairs and scooters—Requirements and test methods
- *ISO 7176–21:* Wheelchairs—Part 21: Requirements and test methods for electromagnetic compatibility of electrically powered wheelchairs and scooters, and battery chargers
- *ANSI/AAMI/ISO 10993–1:* Biological evaluation of medical devices—Part 1: Evaluation and testing within a risk management process
- *ANSI/AAMI/ISO 10993–5:* Biological evaluation of medical devices—Part 5: Tests for in vitro cytotoxicity
- *AAMI/ANSI/ISO 10993–10:* Biological evaluation of medical devices—Part 10: Tests for irritation and skin sensitization
- *IEC 62304:* Medical device software—Software life cycle processes
- *ISO 7176–25:* Wheelchairs—Part 25: Batteries and chargers for powered wheelchairs

We also recommend you consider FDA's guidance entitled ''Hospital Bed System Dimensional and Assessment Guidance to Reduce Entrapment'' when considering the appropriate risk assessment referenced in the conditions set forth above.

Firms are now exempt from 510(k) requirements for powered wheeled stretchers as long as they meet these conditions, subject to the limitations on exemption in 21 CFR 890.9. Firms must comply with the particular conditions set forth in the conditions for exemption or submit and receive clearance for a 510(k) prior to marketing.

V. Analysis of Environmental Impact

The Agency has determined under 21 CFR 25.30(h) that this action is of a type that does not individually or cumulatively have a significant effect on the human environment. Therefore, neither an environmental assessment nor an environmental impact statement is required.

VI. Paperwork Reduction Act of 1995

This final order refers to previously approved FDA collections of

[1] FDA notes that the ''ACTION'' caption for this final order is styled as ''Final amendment; final order,'' rather than ''Final order.'' Beginning in December 2019, this editorial change was made to indicate that the document ''amends'' the Code of Federal Regulations. The change was made in accordance with the Office of Federal Register's (OFR) interpretations of the Federal Register Act (44 U.S.C. chapter 15), its implementing regulations (1 CFR 5.9 and parts 21 and 22), and the Document Drafting Handbook.

information. These collections of information are subject to review by the Office of Management and Budget (OMB) under the Paperwork Reduction Act of 1995 (44 U.S.C. 3501–3521). The collections of information in 21 CFR part 820, regarding quality system regulation, have been approved under OMB control number 0910–0073; the collections of information in part 807, subpart E, regarding premarket notification submissions, have been approved under OMB control number 0910–0120; and the collections of information in 21 CFR parts 801 and 809, regarding labeling, have been approved under OMB control number 0910–0485.

List of Subjects in 21 CFR Part 890

Medical devices.

Therefore, under the Federal Food, Drug, and Cosmetic Act and under authority delegated to the Commissioner of Food and Drugs, 21 CFR part 890 is amended as follows:

PART 890—PHYSICAL MEDICINE DEVICES

■ 1. The authority citation for part 890 continues to read as follows:

Authority: 21 U.S.C. 351, 360, 360c, 360e, 360j, 360*l*, 371.

■ 2. In § 890.3690, revise paragraph (b) to read as follows:

§ 890.3690 Powered wheeled stretcher.

* * * * *

(b) *Classification.* Class II (performance standards). The powered wheeled stretcher is exempt from premarket notification procedures in subpart E of part 807 of this chapter, subject to § 890.9, and the following conditions for exemption:

(1) Appropriate analysis and nonclinical testing must demonstrate that the safety controls are adequate to ensure safe use of the device and prevent user falls from the device in the event of a device failure;

(2) Appropriate analysis and nonclinical testing must demonstrate the ability of the device to withstand the rated user weight load with an appropriate factor of safety;

(3) Appropriate analysis and nonclinical testing must demonstrate the longevity of the device to withstand external forces applied to the device and provide the user with an expected service life of the device;

(4) Appropriate analysis and nonclinical testing must demonstrate proper environments of use and storage of the device to maximize the longevity of the device;

(5) Appropriate analysis and nonclinical testing (such as outlined in appropriate FDA-recognized consensus standards) must validate electromagnetic compatibility and electrical safety;

(6) Appropriate analysis and nonclinical testing (such as outlined in appropriate FDA-recognized consensus standards) must validate that the skin-contacting components of the device are biocompatible;

(7) Appropriate analysis and nonclinical testing (such as outlined in appropriate FDA-recognized consensus standards) must validate the software life cycle and that all processes, activities, and tasks are implemented and documented;

(8) Appropriate analysis and nonclinical testing must validate that the device components are found to be nonflammable;

(9) Appropriate analysis and nonclinical testing (such as outlined in appropriate FDA-recognized consensus standards) must validate that the battery in the device performs as intended over the anticipated service life of the device;

(10) Adequate labeling is provided to the user to document proper use and maintenance of the device to ensure safe use of the device in the intended use environment; and

(11) Appropriate risk assessment including, but not limited to, evaluating the dimensional limits of the gaps in hospital beds, and mitigation strategy to reduce entrapment.

Dated: January 7, 2020.

Lowell J. Schiller,

Principal Associate Commissioner for Policy.

[FR Doc. 2020–00295 Filed 1–13–20; 8:45 am]

BILLING CODE 4164–01–P

DEPARTMENT OF STATE

22 CFR Parts 35, 103, 127, and 138

[Public Notice: 10992]

RIN 1400–AF00

Department of State 2020 Civil Monetary Penalties Inflationary Adjustment

AGENCY: Department of State.

ACTION: Final rule.

SUMMARY: This final rule is issued to adjust the civil monetary penalties (CMP) for regulatory provisions maintained and enforced by the Department of State. The revised CMP adjusts the amount of civil monetary penalties assessed by the Department of State based on the December 2019 guidance from the Office of Management and Budget. The new amounts will apply only to those penalties assessed on or after the effective date of this rule, regardless of the date on which the underlying facts or violations occurred.

DATES: This final rule is effective on January 14, 2020.

FOR FURTHER INFORMATION CONTACT: Alice Kottmyer, Attorney-Adviser, Office of Management, *kottmyeram@state.gov*. ATTN: Regulatory Change, CMP Adjustments, (202) 647–2318.

SUPPLEMENTARY INFORMATION: The Federal Civil Penalties Inflation Adjustment Act of 1990, Public Law 101–410, as amended by the Debt Collection Improvement Act of 1996, Public Law 104–134, required the head of each agency to adjust its CMPs for inflation no later than October 23, 1996 and required agencies to make adjustments at least once every four years thereafter. The Federal Civil Penalties Inflation Adjustment Act Improvements Act of 2015, Section 701 of Public Law 114–74 (the 2015 Act) further amended the 1990 Act by requiring agencies to adjust CMPs, if necessary, pursuant to a ''catch-up'' adjustment methodology prescribed by the 2015 Act, which mandated that the catch-up adjustment take effect no later than August 1, 2016. Additionally, the 2015 Act required agencies to make annual adjustments to their respective CMPs in accordance with guidance issued by the Office of Management and Budget (OMB).

Based on these statutes, the Department of State (the Department) published a final rule in June 2016 to implement the ''catch-up'' provisions; and annual updates to its CMPs in January 2017, January 2018, and March 2019 (delayed due to the government shutdown).

On December 16, 2019, OMB notified agencies that the annual cost-of-living adjustment multiplier for 2020, based on the Consumer Price Index, is 1.01764. Additional information may be found in OMB Memorandum M–20–05, at: *https://www.whitehouse.gov/wp-content/uploads/2019/12/M-20-05.pdf*. This final rule amends Department CMPs for fiscal year 2019.

Overview of the Areas Affected by This Rule

Within the Department of State (title 22, Code of Federal Regulations), this rule affects four areas:

(1) Part 35, which implements the Program Fraud Civil Remedies Act of 1986 (PFCRA), codified at 31 U.S.C. 3801–3812;

(2) Part 103, which implements the Chemical Weapons Convention Implementation Act of 1998 (CWC Act);

(3) Part 127, which implements the penalty provisions of sections 38(e), 39A(c), and 40(k) of the Arms Export Control Act (AECA) (22 U.S.C. 2778(e), 2779a(c), 2780(k)); and

(4) Part 138, which implements Section 319 of Public Law 101–121, codified at 31 U.S.C. 1352, and prohibits recipients of federal contracts, grants, and loans from using appropriated funds for lobbying the Executive or Legislative Branches of the federal government in connection with a specific contract.

Specific Changes to 22 CFR Made by This Rule

I. Part 35

The PFRCA, enacted in 1986, authorizes agencies, with approval from the Department of Justice, to pursue individuals or firms for false claims. Applying the 2020 multiplier, the new maximum liabilities are as follows: $11,665 up to a maximum of $349,969.

II. Part 103

The CWC Act provided domestic implementation of the Convention on the Prohibition of the Development, Production, Stockpiling, and Use of Chemical Weapons and on Their Destruction. The penalty provisions of the CWC Act are codified at 22 U.S.C. 6761. Applying the 2020 multiplier, the new maximum amounts are as follows: *Prohibited acts related to inspections,* $39,229; for *Recordkeeping violations,* $7,846.

III. Part 127

The Assistant Secretary of State for Political-Military Affairs is responsible for the imposition of CMPs under the International Traffic in Arms Regulations (ITAR), which is administered by the Directorate of Defense Trade Controls (DDTC).

(1) AECA Section 38(e)

Applying the 2020 multiplier, the new maximum penalty under 22 U.S.C. 2778 (22 CFR 127.10(a)(1)(i)) is $1,183,736.

(2) AECA Section 39A(c)

Applying the 2020 multiplier, the new maximum penalty under 22 U.S.C. 2779a (22 CFR 127.10(a)(1)(ii)) is $860,683, or five times the amount of the prohibited payment, whichever is greater.

(3) AECA Section 40(k)

Applying the 2020 multiplier, the new maximum penalty under 22 U.S.C. 2780 (22 CFR 127.10(a)(1)(iii)) is $1,024,457.

IV. Part 138

Section 319 of Public Law 101–121, codified at 31 U.S.C. 1352, provides penalties for recipients of federal contracts, grants, and loans who use appropriated funds to lobby the Executive or Legislative Branches of the federal government in connection with a specific contract, grant, or loan. Any person who violates that prohibition is subject to a civil penalty. The statute also requires each person who requests or receives a federal contract, grant, cooperative agreement, loan, or a federal commitment to insure or guarantee a loan, to disclose any lobbying; there is a penalty for failure to disclose.

Applying the 2020 multiplier, the maximum penalties for both improper expenditures and failure to disclose, is: For first offenders, $20,158; for others, not less than $20,489, and not more than $204,892.

SUMMARY

Citation in 22 CFR	2019 Max penalties	New max penalties
§ 35.3	$11,463 *up to* $343,903	$11,665 up to $349,969.
§ 103.6, *Prohibited Acts*	$38,549	$39,229.
§ 103.6, *Recordkeeping Violations*	$7,710	$7,846.
§ 127.10(a)(1)(i)	$1,163,217	$1,183,736.
§ 127.10(a)(1)(ii)	$845,764 *or 5 times the amount of the prohibited payment, whichever is greater.*	$860,683 *or 5 times the amount of the prohibited payment, whichever is greater.*
§ 127.10(a)(1)(iii)	$1,006,699	$1,024,457.
§ 138.400, *First Offenders*	$19,809	$20,158.
§ 138.400	$20,134 *up to* $201,340	$20,489 *up to* $204,892.

2020 Multiplier: 1.01764.

Effective Date of Penalties

The revised CMP amounts will go into effect on the date this rule is published. All violations for which CMPs are assessed on or after the effective date of this rule, regardless of whether the violation occurred before the effective date, will be assessed at the adjusted penalty level.

Future Adjustments and Reporting

The 2015 Act directed agencies to undertake an annual review of CMPs using a formula prescribed by the statute. Annual adjustments to CMPs are made in accordance with the guidance issued by OMB. As in this rulemaking, the Department of State will publish notification of annual inflation adjustments to CMPs in the **Federal Register** no later than January 15 of each year, with the adjusted amount taking effect immediately upon publication.

Regulatory Analysis and Notices

Administrative Procedure Act

The Department of State is publishing this rule using the ''good cause'' exception to the Administrative Procedure Act (5 U.S.C. 553(b)), as the Department has determined that public comment on this rulemaking would be impractical, unnecessary, or contrary to the public interest. This rulemaking is mandatory and entirely without agency discretion; it implements Public Law 114–74. *See* 5 U.S.C. 553(d)(3).

Regulatory Flexibility Act

Because this rulemaking is exempt from 5 U.S.C. 553, a Regulatory Flexibility Analysis is not required.

Unfunded Mandates Reform Act of 1995

This rule does not involve a mandate that will result in the expenditure by State, local, and tribal governments, in the aggregate, or by the private sector, of $100 million or more in any year and it will not significantly or uniquely affect small governments. Therefore, no actions were deemed necessary under the provisions of the Unfunded Mandates Reform Act of 1995.

Small Business Regulatory Enforcement Fairness Act of 1996

This rule is not a major rule within the meaning of the Small Business Regulatory Enforcement Fairness Act of 1996.

Executive Orders 12372 and 13132

This amendment will not have substantial direct effects on the States, on the relationship between the National Government and the States, or on the distribution of power and responsibilities among the various levels of government. Therefore, in accordance with Executive Order 13132, it is determined that this amendment does not have sufficient federalism implications to require consultations or warrant the preparation of a federalism summary impact statement.

Executive Orders 12866, 13563, and 13771

The Department believes that benefits of the rulemaking outweigh any costs, and there are no feasible alternatives to this rulemaking. Pursuant to M–20–05, the Office of Information and Regulatory Affairs (OIRA) has determined that agency regulations that (1) exclusively implement the annual adjustment, (2) are consistent with this guidance, and (3) have an annual impact of less than $100 million, are generally not significant regulatory actions under E.O. 12866. Therefore, agencies are generally not required to submit regulations satisfying those criteria to OIRA for review. Further, since those regulations are not significant regulatory actions under E.O. 12866, they are not considered E.O. 13771 regulatory actions. This regulation satisfies all of those criteria.

Executive Order 12988

The Department of State has reviewed the amendment in light of Executive Order 12988 to eliminate ambiguity, minimize litigation, establish clear legal standards, and reduce burden.

Executive Order 13175

The Department of State has determined that this rulemaking will not have tribal implications, will not impose substantial direct compliance costs on Indian tribal governments, and will not preempt tribal law. Accordingly, Executive Order 13175 does not apply to this rulemaking.

Paperwork Reduction Act

This rulemaking does not impose or revise any information collections subject to 44 U.S.C. chapter 35.

List of Subjects

22 CFR Part 35

Administrative practice and procedure, Claims, Fraud, Penalties.

22 CFR Part 103

Administrative practice and procedure, Chemicals, Classified information, Foreign relations, Freedom of information, International organization, Investigations, Penalties, Reporting and recordkeeping requirements.

22 CFR Part 127

Arms and munitions, Exports.

22 CFR Part 138

Government contracts, Grant programs, Loan programs, Lobbying, Penalties, Reporting and recordkeeping requirements.

For the reasons set forth above, 22 CFR parts 35, 103, 127, and 138 are amended as follows:

PART 35—PROGRAM FRAUD CIVIL REMEDIES

■ 1. The authority citation for part 35 continues to read as follows:

Authority: 22 U.S.C. 2651a; 31 U.S.C. 3801 *et seq.;* Pub. L. 114–74, 129 Stat. 584.

§ 35.3 [Amended]

■ 2. In § 35.3:
■ a. Remove ''$11,463'' and add in its place ''$11,665'', wherever it occurs.
■ b. In paragraph (f), remove ''$343,903'' and add in its place ''$349,969''.

PART 103—REGULATIONS FOR IMPLEMENTATION OF THE CHEMICAL WEAPONS CONVENTION AND THE CHEMICAL WEAPONS CONVENTION IMPLEMENTATION ACT OF 1998 ON THE TAKING OF SAMPLES AND ON ENFORCEMENT OF REQUIREMENTS CONCERNING RECORDKEEPING AND INSPECTIONS

■ 3. The authority citation for part 103 continues to read as follows:

Authority: 22 U.S.C. 2651a; 22 U.S.C. 6701 *et seq.;* Pub. L. 114–74, 129 Stat. 584.

§ 103.6 [Amended]

■ 4. In§ 103.6:
■ a. Remove ''$38,549'' and add in its place ''$39,229'' in paragraph (a)(1); and
■ b. Remove ''$7,710'' and add in its place ''$7,846'' in paragraph (a)(2).

PART 127—VIOLATIONS AND PENALTIES

■ 5. The authority citation for part 127 continues to read as follows:

Authority: Sections 2, 38, and 42, Pub. L. 90–629, 90 Stat. 744 (22 U.S.C. 2752, 2778, 2791); 22 U.S.C. 401; 22 U.S.C. 2651a; 22 U.S.C. 2779a; 22 U.S.C. 2780; E.O. 13637, 78 FR 16129; Pub. L. 114–74, 129 Stat. 584.

§ 127.10 [Amended]

■ 6. In § 127.10:
■ a. In paragraph (a)(1)(i), remove ''$1,163,217'' and add in its place ''$1,183,736'';
■ b. In paragraph (a)(1)(ii), remove ''$845,764'' and add in its place ''$860,683''; and
■ c. In paragraph (a)(1)(iii), remove ''$1,006.699'' and add in its place ''$1,024,457''.

PART 138—RESTRICTIONS ON LOBBYING

■ 7. The authority citation for part 138 continues to read as follows:

Authority: 22 U.S.C. 2651a; 31 U.S.C. 1352; Pub. L. 114–74, 129 Stat. 584.

§ 138.400 [Amended]

■ 8. In § 138.400:
■ a. Remove ''$20,134'' and ''$201,340'' and add in their place ''$20,489'' and ''$204,892'', respectively, wherever they occur.
■ b. In paragraph (e), remove ''$19,809'' and add in its place ''$20,158''.

Dated: January 8, 2020.

Alicia Frechette,

Executive Director, Office of the Legal Adviser and Bureau of Legislative Affairs, Department of State.

[FR Doc. 2020–00443 Filed 1–13–20; 8:45 am]

BILLING CODE 4710–10–P

DEPARTMENT OF LABOR

Mine Safety and Health Administration

30 CFR Parts 56 and 57

[Docket No. MSHA–2019–0007]

RIN 1219–AB88

Electronic Detonators

AGENCY: Mine Safety and Health Administration, Labor.

ACTION: Direct final rule; request for comments.

SUMMARY: The Mine Safety and Health Administration (MSHA) is revising certain safety standards for explosives at metal and nonmetal (MNM) mines. This rule updates existing provisions consistent with technological advancements involving electronic detonators. MSHA is publishing a direct final rule because the Agency expects that there will be no significant adverse

comments on the rule. Elsewhere in this issue of the **Federal Register**, MSHA is publishing a companion proposed rule for notice and comment rulemaking to provide a procedural framework to finalize the rule in the event that the Agency receives significant adverse comment and withdraws this direct final rule. The companion proposed rule and the direct final rule are substantially identical.

DATES: This direct final rule is effective on March 16, 2020 unless substantive adverse comments are received or postmarked by midnight Eastern Standard Time on February 13, 2020. If adverse comment is received, MSHA will publish a timely withdrawal of the rule in the **Federal Register**.

ADDRESSES: Submit comments and informational materials, identified by RIN 1219–AB88 or Docket No. MSHA–2019–0007, by one of the following methods listed below:

- *Federal E-Rulemaking Portal: http://www.regulations.gov.* Follow the on-line instructions for submitting comments.
- *Email: zzMSHA-comments@dol.gov.*
- *Mail:* MSHA, Office of Standards, Regulations, and Variances, 201 12th Street South, Suite 4E401, Arlington, Virginia 22202–5452.
- *Hand Delivery or Courier:* 201 12th Street South, Suite 4E401, Arlington, Virginia, between 9:00 a.m. and 5:00 p.m. Monday through Friday, except Federal holidays. Sign in at the receptionist's desk on the 4th floor East, Suite 4E401.

Instructions: All submissions for the direct final rule must include RIN 1219–AB88 or Docket No. MSHA–2019–0007. MSHA posts all comments without change, including any personal information provided. Access comments electronically on *http://www.regulations.gov* and on MSHA's website at *https://www.msha.gov/regulations/rulemaking.*

Docket: For access to the docket to read comments received, go to *http://www.regulations.gov* or *http://www.msha.gov/currentcomments.asp.* To read background documents, go to *http://www.regulations.gov.* Review comments in person at the Office of Standards, Regulations, and Variances, 201 12th Street South, Suite 4E401, Arlington, Virginia 22202–5452. Sign in at the receptionist's desk on the 4th floor East, Suite 4E401.

Email Notification: To subscribe to receive email notification when MSHA publishes rulemaking documents in the **Federal Register**, go to *https://public.govdelivery.com/accounts/USDOL/subscriber/new.*

FOR FURTHER INFORMATION CONTACT: Sheila A. McConnell, Director, Office of Standards, Regulations, and Variances, MSHA, at *mcconnell.sheila.a@dol.gov* (email), 202–693–9440 (voice); or 202–693–9441 (facsimile). These are not toll-free numbers.

SUPPLEMENTARY INFORMATION:

I. Direct Final Rule

Concurrent with this direct final rule, MSHA is publishing a separate, substantially identical proposed rule in the Proposed Rules section of this **Federal Register** edition. The concurrent publication of these documents will speed notice and comment rulemaking under 30 U.S.C. 811 and the Administrative Procedure Act (see 5 U.S.C. 553) should the Agency decide to withdraw the direct final rule. All interested parties who wish to comment should comment at this time because MSHA does not anticipate initiating an additional comment period.

MSHA has determined that notice and public comment are unnecessary because the rule imposes no new requirements; it simply clarifies the application of MSHA's existing standards to technologies developed after the standards were promulgated. For this reason, MSHA believes good cause exists to dispense with notice and comment and proceed with a direct final rule.

If MSHA does not receive significant adverse comments on or before February 13, 2020, the Agency will publish a notification in the **Federal Register** no later than March 16, 2020, confirming the effective date of the direct final rule.

For purposes of this direct final rule, a significant adverse comment is one that explains why the rule would be inappropriate, including challenges to the rule's underlying premise or approach, or why it would be ineffective, less safe than other alternatives, or unacceptable without a change. In determining whether a significant adverse comment merits withdrawal of this direct final rule, MSHA will consider whether the comment raises an issue significant enough to warrant a substantive response in a notice-and-comment process. A comment recommending an addition to the rule should explain why this rule would be ineffective, less safe than other alternatives, or unacceptable without the addition.

If significant adverse comments are received, the Agency will publish a notfication in the **Federal Register** withdrawing this direct final rule no later than March 16, 2020. In the event the direct final rule is withdrawn, the Agency intends to proceed with the proposed rulemaking by addressing the comments received and publishing a final rule. The comment period for the proposed rule runs concurrently with that of the direct final rule. Any comments received under the proposed rule will be treated as comments regarding this direct final rule. Likewise, significant adverse comments submitted to this direct final rule will be considered as comments to the proposed rule. The Agency will consider such comments in developing a subsequent final rule.

II. Background

A. General Discussion

A detonator is a device containing a detonating charge that is used to initiate an explosion reliably, at a specified time, and, as applicable, in a prescribed sequence. There are three types of detonators primarily used in blasting operations in MNM mines. These are non-electric, electric, and electronic detonators. A non-electric detonator is designed to initiate explosions without the use of electric wires. A non-electric detonator includes devices that use detonating cords, shock-tube or safety fuse detonators, or a combination of these.

An electric detonator uses electrical currents to initiate detonation. Electrical currents from the detonator's lead wires or connectors ignite an electric match which in turn ignites a pyrotechnic delay element that initiates the base charge. The pyrotechnic delay element burns at an approximated rate. The length and composition of the pyrotechnic delay element control the approximate rate of burn and thus the timing. Since the approximate rate of burn is subject to variation, the timing accuracy of electric detonators is affected. Electric detonator systems typically include a blasting machine that delivers the electrical current to the detonator. Circuit testers, such as a blaster's galvanometer, are used to check the continuity and resistance of the individual detonator and the entire electric circuit.[1]

In contrast to electric detonators, electronic detonator systems do not have a pyrotechnic delay element. Electronic detonator systems are designed to use electronic components to transmit a firing signal with validated commands and secure communications to each detonator, and a detonator cannot be initiated by other means.

[1] MSHA considers detonators fired by a shock tube and incorporating a pre-programmed microchip delay rather than a pyrotechnic one to be electric detonators, not electronic detonators.

Typically, each detonator has a microchip to control sequence timing and an integrated circuit chip and a capacitor, internal to each detonator, to control the blast initiation timing. Electronic detonators enable exact time delays between blasts to ensure the blast energy is used to break rock, reducing fugitive energy loss in the form of vibrations.

Unlike non-electric and electric systems, electronic detonator systems are uniquely designed by each manufacturer, which requires that these devices be used according to manufacturers' instructions. Because these electronic detonator systems require password log-ins, operators must authorize persons to initiate the detonations, which minimizes the potential for accidental misuse.

Based on MSHA's experience with the electronic detonator systems it has reviewed,[2] the Agency has found that electronic detonator systems have a number of advantages compared to non-electric and electric systems, including greater operator control to limit their use to authorized personnel, more precise timing, reduced vibrations, and a reduced sensitivity to stray electrical currents and radio frequencies.

B. Rulemaking Background

MSHA's existing standards in 30 CFR parts 56 and 57, subpart E, focus on hazards associated with transporting, maintaining, using, or working near explosive materials, including detonators.

Since 1979, MSHA standards have defined detonators to mean any device containing a detonating charge that is used to initiate an explosive such as electric blasting caps and non-electrical instantaneous or delay blasting caps. At the time these standards were issued, MSHA believed that the definition provided for the automatic inclusion of new detonators as they developed. Metal and Nonmetal Mine Safety; New and Revised Definitions and Safety and Health Standards for Explosives, 44 FR 48535, 48538 (August 17, 1979).

On January 18, 1991, MSHA revised the definition of detonators in §§ 56.6000 and 57.6000 (56 FR 2072) to clarify that the definition does not include detonating cords and that the detonators may be either ''Class A'' (explosives that include devices that constitute a maximum shipping hazard) or ''Class C'' (explosive devices that may contain Class A explosives, but in restricted quantities) as classified by the Department of Transportation (DOT) in 49 CFR 173.53 and 173.100.[3]

Since MSHA published these rules, advancements in computer and micro-processing technology have led to electronic timing of detonations. On September 28, 2004, MSHA issued Program Information Bulletin (PIB) No. P04–20, Electronic Detonators and Requirements for Shunting and Circuit Testing, to respond to stakeholder inquiries concerning how to apply the MSHA requirements for shunting and circuit testing to electronic detonators. In PIB No. P04–20, MSHA reported results of the Agency's evaluation of two electronic detonator systems. MSHA found that the systems contained their own integral elements for shunting and circuit testing, which met the Agency's existing standards for shunting and circuit testing when used as recommended by the manufacturers. Since issuing PIB No. P04–20, MSHA has evaluated several other electronic detonator systems and determined that these systems also contain their own integral elements for shunting and circuit testing that meet the intended MSHA requirements when the systems are used according to the manufacturers' instructions. Existing MSHA standards require operators to adhere to manufacturers' instructions for all detonation systems, including new systems. See 30 CFR 56.6308 and 57.6308; 56 FR 2072, 2081.

C. Regulatory Review and Reform

On February 28, 2008, the Small Business Administration (SBA) selected MSHA's explosives standards for regulatory review pursuant to its Small Business Regulatory Review and Reform Initiative,[4] which was designed to identify existing federal rules that small business stakeholders believe should be reviewed and reformed. The MSHA reform nomination, discussed in the SBA's February 2008 report, stated that MSHA should update its existing explosive standards to be consistent with modern mining industry standards. The report further noted industry concerns that MSHA's existing standards do not address fundamental aspects of explosive safety, such as electronic detonation. On July 30, 2008, SBA also testified before the House Subcommittee on Regulations, Healthcare, and Trade that SBA's Office of Advocacy had met with nominated agencies to discuss the importance of reviewing and reforming the identified rules.[5]

In 2018, the Agency announced its intent to review existing regulations to assess compliance costs and reduce regulatory burden. As part of this review, MSHA sought stakeholders' assistance in identifying those regulations that could be repealed, replaced, or modified without reducing miners' safety or health. MSHA published on its website, *https://www.msha.gov/provide-or-view-comments-msha-regulations-repeal-replace-or-modify,* a notice that the Agency is seeking assistance in identifying regulations for review. All comments are posted on the Agency's website.

As a result of this solicitation, MSHA received comments from the Institute of Makers of Explosives (IME) requesting that MSHA modernize its standards to ''properly address'' electronic detonators. IME noted that electronic detonators have been used by the industry for over two decades and provide a ''sophisticated level of safety and security,'' and recommended several regulatory modifications to both coal and MNM standards. Specifically, IME proposed changes to §§ 56.6000 and 57.6000, the definition of ''Detonator;'' 56.6310, Misfire waiting period; 57.6407, Circuit testing; 57.6604, Precautions during storms; 75.1310, Explosives and blasting equipment; and 77.1303, Explosives, handling and use.

For this rulemaking, MSHA addresses the use of electronic detonators in MNM surface and underground mines and modifies §§ 56.6000 and 57.6000, the definition of ''Detonator;'' 56.6310 and 57.6310, Misfire waiting period; 56.6407 and 57.6407, Circuit testing; and 57.6604, Precautions during storms. MSHA is amending certain portions of the explosives standards to include electronic detonators. However, the

[2] *See https://arlweb.msha.gov/TECHSUPP/ACC/lists/00elecdet.pdf.*

[3] As MSHA was in the process of publishing this 1991 rule, DOT revised its classification requirements at 49 CFR 173.50 and 173.53 (55 FR 52619) consistent with the United Nations Recommendations on the Transport of Dangerous Goods, issued December 21, 1990. Under DOT's revisions, Class A explosives were reclassified as ''Division 1.1 and Division 1.2'' to mean explosives that have a mass explosion hazard (explosion would affect the entire load instantaneously) or projection hazard (explosion would result in projection of fragments). Class C explosives were reclassified as ''Division 1.4'' to mean explosives that have a minor explosion hazard (explosive effects are confined to the packaging). These revised definitions form the current classification system recognized for shipping and packaging explosives in the U.S.

[4] SBA, Office of Advocacy, Report on the Regulatory Flexibility Act, FY 2007; Annual Report of the Chief Counsel for Advocacy on Implementation of the Regulatory Flexibility Act and Executive Order 13272, February 2008.

[5] Testimony of the Honorable Thomas M. Sullivan, Chief Counsel for Advocacy, U.S. Small Business Administration, U.S. House of Representatives, Committee on Small Business, Subcommittee on Regulations, Health Care, and Trade, July 30, 2008.

other explosives standards in subparts E in 30 CFR parts 56 and 57 continue to apply to electronic detonators.

For those electronic detonators that the Agency has reviewed, MSHA agrees with IME that electronic detonators provide a working environment that is as safe or safer for miners compared to non-electric and electric detonators because they provide for greater control of a blast.[6] MSHA believes that recognizing electronic detonator systems as distinct from electric detonators will eliminate confusion over certain regulatory requirements. For example, §§ 56.6401 and 57.6401 and 56.6407 and 57.6407 require that electric detonators be shunted and tested to provide protection against premature detonation caused by extraneous current flowing through portions of the circuit as they are prepared. Operators use a galvanometer or other instrument to test electric circuits to determine whether an individual series circuit is continuous, to locate broken wires and connections, and to avoid introducing excessive current to the circuit. 56 FR 2082–83.

However, the electronic detonator systems that MSHA has reviewed contain their own integral elements for shunting and circuit testing that exceed the safety protections in MSHA's requirements when the systems are used according to the manufacturer's instructions. These systems, typically, are designed with an integrated circuit and a capacitor system internally wired to each electronic detonator, which isolates the base charge from the wires leading to the internal capacitors and microchip, making shunting unnecessary.

In addition, based on MSHA's experience, the Agency has found that electronic detonator systems inherently provide more protection than MSHA's shunting and circuit testing standards do for electric detonators because electronic detonator systems communicate digitally to each detonator and are designed to prevent interference from stray currents and other electromagnetic interference. Additionally, electronic detonators are less likely to be misused because they cannot be fired simply by a battery or by other routine electric sources.

[6] *See* Program Information Bulletin No. P04–20, Electronic Detonators and Requirements for Shunting and Circuit Testing. In addition, the U.S. Department of the Interior's Office of Surface Mining Reclamation and Enforcement (OSMRE) published a study in 2013 that concluded that electronic detonators are more accurate and precise than the non-electric systems. (Field Testing and Analysis of Blasts Utilizing Short Delays with Electronic Detonators (Lusk, Silva, and Eltschlager (September 2013)).

III. Section-by-Section Analysis

A. Sections 56.6000 and 57.6000—Definitions

In §§ 56.6000 and 57.6000, the definition for *Detonator* is modified by adding the words ''electronic detonators,'' before the word ''electric'' in the second sentence of the paragraph. Also, in § 56.6000 a comma is added after the word ''caps'' in the second sentence.

The addition of the term ''electronic detonators'' to §§ 56.6000 and 57.6000, *Detonator,* modernizes the definition by including electronic detonators. The addition of a comma in § 56.6000 is for clarity and to conform with the definition of *Detonator* in § 57.6000.

B. Sections 56.6310 and 57.6310—Misfire Waiting Period

Sections 56.6310 and 57.6310 require that in the event of a misfire while blasting, personnel must wait a specific time period based on the type of detonator being used before entering the blast area for safety. Under §§ 56.6310 and 57.6310, a new paragraph (c) is added that requires a 30 minute waiting period, or for the manufacturer-recommended time, whichever is longer, in the event of a misfire while blasting with an electronic detonator.

MSHA believes that waiting at least 30 minutes before entering a blast area if electronic detonators are involved in a misfire provides personnel an adequate amount of time to analyze the circumstances of the misfire and to develop a plan of action to safely enter the blast area. In MSHA's experience, this waiting period is consistent with industry-recommended standards.[7] In the event that an electronic detonator manufacturer recommends more than a 30-minute waiting period if a misfire occurs using its electronic detonators, persons must follow the manufacturer's recommended wait time before entering the blast area. This is consistent with §§ 56.6308 and 57.6308, requiring persons to follow manufacturer's instructions for using detonation systems.

C. Sections 56.6407 and 57.6407—Circuit Testing

Sections 56.6407 and 57.6407 require that electric blasting circuits be tested to ensure the circuits are properly wired. Under § 56.6407(a) and (c), the words ''or electronic'' are added.

Under § 57.6407(a)(3) and (b)(2), the words ''or electronic'' are added.

[7] Institute of Makers of Explosives, Safety Library Publication No. 4, Warnings and Instructions for Consumers in Transporting, Storing, Handling, and Using Explosive Materials (October 2016).

A blasting galvanometer is used to test electric detonator circuits to prevent misfires by determining whether an individual series circuit is continuous and by locating broken wires and connections. A blasting galvanometer or other appropriate type of testing equipment is used to avoid introducing excessive current into the circuit. This differs from the electronic detonator systems the Agency has reviewed because these systems have a means for circuit testing incorporated into their designs. The Agency anticipates that other electronic detonator systems MSHA has not reviewed also have integral circuit testing mechanisms. While revising the standard would clarify that the circuit-testing requirement applies to electronic detonator systems, the Agency believes that most or all electronic detonator systems already comply with this safety standard. This change does not require that electronic detonator systems with integral circuit testing be tested additionally with a galvanometer or other outside mechanism.

D. Section 57.6604(b)—Precautions During Storms

Under § 57.6604, underground electrical blasting operations must be suspended during the approach and progress of an electrical storm. Electromagnetic fields and stray currents can be generated from lightning. Higher energy levels of electromagnetic interference and stray current are generally disruptive or damaging to electronic equipment. Based on MSHA's experience with the electronic detonators it has examined, electronic detonator systems and technologies generally have the base charge isolated from the wires leading to the internal capacitors and microchip providing built-in protection from interference from electromagnetic fields and stray current. However, MSHA is aware that an electromagnetic pulse, such as lightning strikes traveling through underground mines by paths such as air lines, water lines, and conductive ore bodies, can damage all types of detonators and equipment and cause misfires. Therefore, for § 57.6604(b), the words ''electronic or'' are added after the word ''Underground''.

The Agency believes that most or all electronic detonator systems are designed to minimize or eliminate the possibility that lightning could initiate a blast; many systems may not be capable of being initiated by lightning. In addition, to the extent these systems are capable of being initiated by lightning, MSHA believes that operators already

have been applying these requirements to electronic detonator systems through manufacturers' directions and accepted industry practices. MSHA believes the revision will have little or no actual impact on operators' existing practices and simply eliminates ambiguity in the requirements under § 57.6604(b).

III. Regulatory Economic Analysis

Executive Orders (E.O.) 12866 and 13563

Executive Orders 12866 and 13563 direct agencies to assess all costs and benefits of available regulatory alternatives and, if regulation is necessary, to select regulatory approaches that maximize net benefits (including potential economic, environmental, public health and safety effects, distributive impacts, and equity). Executive Order 13563 emphasizes the importance of quantifying both costs and benefits, of reducing costs, of harmonizing rules, and of promoting flexibility.

Pursuant to the Congressional Review Act (5 U.S.C. 801 *et seq.*), the Office of lnformation and Regulatory Affairs designated this rule as not a 'major rule', as defined by 5 U.S.C. 804(2).

MSHA has assessed the costs and benefits of the changes and has determined that there are no costs associated with this direct final rule. Currently, electronic detonators have been used by the mining industry for more than 20 years and account for at least 15 percent of the blast initiation systems used in the U.S. in all industries.[8] As part of the Agency's regulatory reform efforts, MSHA received comments from industry representatives supporting the changes. This direct final rule codifies activity already undertaken by the mining industry regarding electronic detonators. This rulemaking is a deregulatory action under E.O. 13771 in its effects.

This direct final rule will not increase or decrease the costs or benefits associated with the use of electronic detonators; however, this action will eliminate ambiguity about detonator options in the application of existing requirements so that mine operators will be able to use their resources more efficiently when making business decisions.

Among other things, this direct final rule clarifies the nonapplicability of certain MSHA standards to electronic detonating systems. For example, while the new ''circuit testing'' standard now makes clear that the standard contemplates electronic detonating systems as well as electric detonators, the preamble clarifies that most or all of these electronic systems inherently comply and that, therefore, the specific actions operators must take when using electric detonators generally need not be taken for electronic detonating systems. Likewise, while this rulemaking does not directly address MSHA's shunting standards, the preamble clarifies that, while those standards require operators to take specific actions when using electric detonators, they are not applicable to inherently compliant electronic detonating systems. Through these clarifications, MSHA will ensure the safety advantages offered by the use of electronic detonators are available to mine operators, including greater operator control to limit use to authorized personnel, more precise timing, reduced vibrations, and a reduced sensitivity to stray electrical currents and radio frequencies. Furthermore, consistent with the directive in E.O. 13777, this direct final rule will update outdated regulations and accommodate technological advances.

Under E.O. 12866, a significant regulatory action is one meeting any of a number of specified conditions, including the following: Having an annual effect on the economy of $100 million or more, creating a serious inconsistency or interfering with an action of another agency, materially altering the budgetary impact of entitlements or the rights of entitlement recipients, or raising novel legal or policy issues. MSHA has determined that this is an ''other significant'' regulatory action under E.O. 12866.

IV. Feasibility

MSHA has concluded that the requirements of the direct final rule would be both technologically and economically feasible because the requirements are already generally accepted industry practices for the use of electronic detonators.

V. Regulatory Flexibility Act and Small Business Regulatory Enforcement Fairness Act

Pursuant to the Regulatory Flexibility Act (RFA) of 1980, as amended by the Small Business Regulatory Enforcement Fairness Act (SBREFA), MSHA has analyzed the compliance cost impact of the direct final rule on small entities. Based on that analysis, MSHA certifies that the rule would not have a significant economic impact on a substantial number of small entities because it does not impose any new costs. Therefore, the Agency is not required to develop an initial regulatory flexibility analysis.

VI. Paperwork Reduction Act of 1995

The Paperwork Reduction Act (PRA) provides for the Federal Government's collection, use, and dissemination of information. The goals of the PRA include minimizing paperwork and reporting burdens and ensuring the maximum possible utility from the information that is collected (44 U.S.C. 3501). There are no information collections associated with this direct final rule.

VII. Other Regulatory Considerations

A. The Unfunded Mandates Reform Act of 1995

MSHA has reviewed the direct final rule under the Unfunded Mandates Reform Act of 1995 (2 U.S.C. 1501 *et seq.*). MSHA has determined that this direct final rule does not include any federal mandate that may result in increased expenditures by State, local, or tribal governments; nor would it increase private sector expenditures by more than $100 million (adjusted for inflation) in any one year or significantly or uniquely affect small governments. Accordingly, the Unfunded Mandates Reform Act of 1995 requires no further Agency action or analysis. Since the direct final rule does not cost over $100 million in any one year, the rule is not a major rule under the Unfunded Mandates Reform Act of 1995.

B. Executive Order 13132: Federalism

The direct final rule does not have ''federalism implications'' because it would not ''have substantial direct effects on the States, on the relationship between the national government and the States, or on the distribution of power and responsibilities among the various levels of government.'' Accordingly, under E.O. 13132, no further Agency action or analysis is required.

C. Executive Order 12630: Government Actions and Interference With Constitutionally Protected Property Rights

The direct final rule does not implement a policy with takings implications. Accordingly, under E.O. 12630, no further Agency action or analysis is required.

D. Executive Order 12988: Civil Justice Reform

The direct final rule was written to provide a clear legal standard for affected conduct and was carefully reviewed to eliminate drafting errors

[8] U.S. Geological Survey, Minerals Yearbook, Explosive Consumption Report (2015–2016).

and ambiguities, so as to minimize litigation and undue burden on the Federal court system. Accordingly, the rule meets the applicable standards provided in section 3 of E.O. 12988, Civil Justice Reform.

E. Executive Order 13175: Consultation and Coordination With Indian Tribal Governments

This direct final rule does not have ''tribal implications'' because it would not ''have substantial direct effects on one or more Indian tribes, on the relationship between the Federal government and Indian tribes, or on the distribution of power and responsibilities between the Federal government and Indian tribes.'' Accordingly, under E.O. 13175, no further Agency action or analysis is required.

F. Executive Order 13211: Actions Concerning Regulations That Significantly Affect Energy Supply, Distribution, or Use

Executive Order 13211 requires agencies to publish a statement of energy effects when a rule has a significant energy action that adversely affects energy supply, distribution or use. MSHA has reviewed this direct final rule for its energy effects because the rule applies to the metal and nonmetal mining sector. MSHA has concluded that it is not a significant energy action because it is not likely to have a significant adverse effect on the supply, distribution, or use of energy. Accordingly, under this analysis, no further Agency action or analysis is required.

G. Executive Order 13272: Proper Consideration of Small Entities in Agency Rulemaking

MSHA has thoroughly reviewed the direct final rule to assess and take appropriate account of its potential impact on small businesses, small governmental jurisdictions, and small organizations. MSHA has determined and certified that the direct final rule does not have a significant economic impact on a substantial number of small entities.

List of Subjects

30 CFR Part 56

Chemicals, Electric power, Explosives, Fire prevention, Hazardous substances, Metals, Mine safety and health, Noise control, Reporting and recordkeeping requirements.

30 CFR Part 57

Chemicals, Electric power, Explosives, Fire prevention, Gases, Hazardous substances, Metals, Mine safety and health, Noise control, Radiation protection, Reporting and recordkeeping requirements.

For the reasons set out in the preamble, and under the authority of the Federal Mine Safety and Health Act of 1977, as amended by the Mine Improvement and New Emergency Response Act of 2006, MSHA is amending chapter I of title 30 of the Code of Federal Regulations as follows:

PART 56—SAFETY AND HEALTH STANDARDS—SURFACE METAL AND NONMETAL MINES

■ 1. The authority citation for part 56 continues to read as follows:

Authority: 30 U.S.C. 811.

■ 2. In § 56.6000, revise the definition for ''Detonator'' to read as follows:

§ 56.6000 Definitions.

* * * * *

Detonator. Any device containing a detonating charge used to initiate an explosive. These devices include electronic detonators, electric or nonelectric instantaneous or delay blasting caps, and delay connectors. The term ''detonator'' does not include detonating cord. Detonators may be either ''Class A'' detonators or ''Class C'' detonators, as classified by the Department of Transportation in 49 CFR 173.53 and 173.100, which is available at any MSHA Metal and Nonmetal Safety and Health district office.

* * * * *

■ 3. In § 56.6310, revise paragraphs (a) and (b) and add paragraph (c) to read as follows:

§ 56.6310 Misfire waiting period.

* * * * *

(a) For 30 minutes if safety fuse and blasting caps are used;

(b) For 15 minutes if any other type detonators are used; or

(c) For 30 minutes if electronic detonators are used, or for the manufacturer-recommended time, whichever is longer.

§ 56.6407 [Amended]

■ 4. In § 56.6407, amend paragraphs (a) and (c) by adding the words ''or electronic'' after the word ''electric''.

PART 57—SAFETY AND HEALTH STANDARDS—UNDERGROUND METAL AND NONMETAL MINES

■ 5. The authority citation for part 57 continues to read as follows:

Authority: 30 U.S.C. 811.

■ 6. In § 57.6000, revise the definition for ''Detonator'' to read as follows:

§ 57.6000 Definitions.

* * * * *

Detonator. Any device containing a detonating charge used to initiate an explosive. These devices include electronic detonators, electric or nonelectric instantaneous or delay blasting caps, and delay connectors. The term ''detonator'' does not include detonating cord. Detonators may be either ''Class A'' detonators or ''Class C'' detonators, as classified by the Department of Transportation in 49 CFR 173.53 and 173.100, which is available at any MSHA Metal and Nonmetal Safety and Health district office.

* * * * *

■ 7. In § 57.6310, revise paragraphs (a) and (b) and add paragraph (c) to read as follows:

§ 57.6310 Misfire waiting period.

* * * * *

(a) For 30 minutes if safety fuse and blasting caps are used;

(b) For 15 minutes if any other type detonators are used; or

(c) For 30 minutes if electronic detonators are used, or for the manufacturer-recommended time, whichever is longer.

§ 57.6407 [Amended]

■ 8. In § 57.6407, amend paragraphs (a)(3) and (b)(2) by adding the words ''or electronic'' after the word ''electric''.

§ 57.6604 [Amended]

■ 9. In § 57.6604, amend paragraph (b) by adding the words ''electronic or'' after the word ''Underground''.

David G. Zatezalo,

Assistant Secretary of Labor for Mine Safety and Health Administration.

[FR Doc. 2019–28446 Filed 1–13–20; 8:45 am]

BILLING CODE 4520–43–P

DEPARTMENT OF HOMELAND SECURITY

Coast Guard

33 CFR Part 100

[Docket Number USCG–2018–1008]

RIN 1625–AA08

Special Local Regulations; Sector Upper Mississippi River Annual and Recurring Marine Events Update

AGENCY: Coast Guard, DHS.

ACTION: Final rule.

SUMMARY: The Coast Guard is amending and updating the listing of annual and recurring marine events that take place within the Eighth Coast Guard District

in the Sector Upper Mississippi River area of responsibility, as well as making technical corrections.

DATES: This rule is effective February 13, 2020.

ADDRESSES: To view documents mentioned in this preamble as being available in the docket, go to *https://www.regulations.gov,* type USCG–2018–1008 in the ''SEARCH'' box and click ''SEARCH.'' Click on Open Docket Folder on the line associated with this rule.

FOR FURTHER INFORMATION CONTACT: If you have questions about this rulemaking, call or email Lieutenant Commander Christian Barger, Waterways Management Division, Sector Upper Mississippi River, U.S. Coast Guard; telephone 314–269–2560, email *Christian.j.barger@uscg.mil.*

SUPPLEMENTARY INFORMATION:

I. Table of Abbreviations

CFR Code of Federal Regulations
COTP Captain of the Port Sector Upper Mississippi River
DHS Department of Homeland Security
FR Federal Register
NPRM Notice of proposed rulemaking
§ Section
U.S.C. United States Code

II. Background Information and Regulatory History

In fall 2018, the Captain of the Port Sector Upper Mississippi River (COTP) conducted an annual review of the annual and recurring marine events that occur within the Sector Upper Mississippi River Captain of the Port Zone, to include Table 2 of 33 CFR 100.801 titled *Sector Upper Mississippi River Annual and Recurring Marine Events.* During this process, the Coast Guard identified changes that were needed to ensure the public is accurately informed of the events and that the table is easy to read. Additionally, during the review the Coast Guard found that technical corrections were needed to the text of 33 CFR 100.801 to ensure inclusivity for all tables of marine events within the section. On July 3, 2019, the Coast Guard published a notice of proposed rulemaking (NPRM) titled *Special Local Regulations; Sector Upper Mississippi River Annual and Recurring Marine Events Update* (84 FR 31810). There we stated why we issued the NPRM, and invited comments on our proposed regulatory action related to this annual update. During the comment period that ended August 2, 2019, we received no comments.

III. Legal Authority and Need for Rule

The Coast Guard is amending this rule under the authority in 46 U.S.C. 70041. The Captain of the Port Sector Upper Mississippi River (COTP) determined an amendment to the regulations contained in 33 CFR 100.801 is necessary to accurately reflect annual and recurring marine events taking place in the Eighth Coast Guard District. This rule ensures that the public is informed of annual and recurring events taking place within the Sector Upper Mississippi River Captain of the Port Zone, that the table of annual and recurring events is easy to read, and minimizes the administrative burden to both the Coast Guard and recurring marine event sponsors.

IV. Discussion of Comments, Changes, and the Rule

As noted above, we received no comments on our NPRM published on July 3, 2019. Although not identified in the NPRM, we are adding the Evansville, IL, Drag Boat Race into this final rule because the sponsor said the 2018 and 2019 races were successful and it will be taking place again on an annual basis.

This rule amends the regulations contained in 33 CFR 100.801 to accurately reflect annual and recurring marine events taking place in the Eighth Coast Guard District. Previously, the text of 33 CFR 100.801 only referred to Table 1, however, the section contains Tables 1 through 7. This rule amends 33 CFR 100.801 to replace six references to ''Table 1'' with the words ''Tables 1 through 7.'' Additionally, it updates 33 CFR 100.801 Table 2 titled *Sector Upper Mississippi River Annual and Recurring Marine Events* to accurately reflect marine events occurring on a regular basis in the Sector Upper Mississippi River Captain of the Port Zone. The rule removes events that no longer occur or do not meet the criteria of a marine event, and adds new events that do meet the criteria of a marine event. In addition, it amends Table 2 by updating the details of one marine event, and by rearranging the Table to display events first by the body of water on which they take place (alphabetically), second by the date(s) on which those events occur, and third by a mile marker (descending). The changes are as follows.

This rule removes the following nine marine events from Table 2 of 33 CFR 100.801:

Date	Event/sponsor	Upper Mississippi River location	Regulated area
1. 1 day—Third Saturday in May	Clear Lake Chapter of the ACBS/That was then, This is Now Boat Show & Exhibition.	Quad Cities, IL	Upper Mississippi River mile marker 454.0 to 456.0 (Iowa).
2. 1 day—Third Saturday in March	Lake West Chamber of Commerce/St. Patrick's Water Parade.	Lake of the Ozarks, MO.	Lake of the Ozarks mile marker 5.0 to 10.0 (Missouri).
4. 2 days—Third weekend in July	Champboat Series LLC/Aquatennial Power Boat Grand Prix.	Minneapolis, MN	Upper Mississippi River mile marker 854.8 to 855.8 (Minnesota).
5. 2 days—Third weekend in June	Lake City Chamber of Commerce/Water Ski Days.	Lake City, MN	Upper Mississippi River mile marker 772.4 to 772.8 (Minnesota).
6. 2 days—First week of August	River City Days Association/River City Days.	Red Wing, MN	Upper Mississippi River mile marker 791.4 to 791.8 (Minnesota).
7. 2 days—Second weekend of September.	St. Louis Drag Boat Association/New Athens Drag Boat Race.	New Athens, IL	Kaskaskia River mile marker 28.0 to 29.0 (Illinois).
8. 2 days—Third weekend in July	Havana Chamber of Commerce/Havana Boat Races.	Havana, IL	Illinois River mile marker 120.3 to 119.7 (Illinois).
9. 5 days—first two weeks of July	K.C. Aviation Expo & Air Show/K.C. Aviation Expo & Air Show.	Kansas City, MO	Missouri River mile marker 366.3 to 369.8 (Missouri).
10. 3 days a week from May 4th–September 30th.	Twin City River Rats Organization/Twin City River Rats.	Twin Cities, MN	Upper Mississippi River mile marker 855.4 to 855.8 (Minnesota).

Events 1, 4, 5, 6, 7, and 8 above have not had a marine event permit application submitted in past consecutive years and the Coast Guard believes the events no longer occur. Events 2, 9, and 10, are expected to continue, however, in their current format they no longer meet the criteria of a marine event and, correspondingly, the Coast Guard is changing how the events are regulated.

This rule adds six marine events to Table 2 of 33 CFR 100.801 and reorganizes the table as follows:

Date	Event	City, State	Regulated area
Kaskaskia River:			
1. 2 days—Second or Third Weekend of July.	Evansville, IL Drag Boat Races.	Evansville, IL	Mile markers 11.0–10.0.
Lake of the Ozarks:			
2. 2 days—The weekend before Labor Day weekend.	Lake of the Ozarks Shootout.	Sunrise Beach, MO	Mile markers 34.5–32.5.
4. 1 day—First Saturday of June	Lake Race	Lake Ozark, MO	Mile markers 4.0–0.0.
Upper Mississippi River:			
5. 4 days—Either the first or second week of July.	Riverfest	La Crosse, WI	Mile markers 698.5–697.5.
6. 2 days—Second weekend of August	Great River Tug	LeClaire, IA/Port Byron, IL	Mile markers 497.6–497.2.
7. 1 day—Third weekend of August	Floatzilla	Bettendorf, IA/Davenport, IA/East Moline, IL/Rock Island, IL.	Mile markers 491.0–479.0.

This rule will update the details of a marine event in Table 2 of 33 CFR 100.801 and reorganize the table as follows:

3. 1 day—Third Saturday of July	Aquapalooza	Osage Beach, MO	Mile markers 19.3–18.7.

V. Regulatory Analyses

We developed this rule after considering numerous statutes and Executive orders related to rulemaking. Below we summarize our analyses based on a number of these statutes and Executive orders, and we discuss First Amendment rights of protestors.

A. Regulatory Planning and Review

Executive Orders 12866 and 13563 direct agencies to assess the costs and benefits of available regulatory alternatives and, if regulation is necessary, to select regulatory approaches that maximize net benefits. Executive Order 13771 directs agencies to control regulatory costs through a budgeting process. This rule has not been designated a ''significant regulatory action,'' under Executive Order 12866. Accordingly, this rule has not been reviewed by the Office of Management and Budget (OMB), and pursuant to OMB guidance it is exempt from the requirements of Executive Order 13771.

This regulatory action determination is based on the location, size, and duration of the Special Local Regulations that will be in place during the listed marine events. These regulated areas are limited in size and duration, and positioned away from high vessel traffic areas. Additionally, this rule only modifies the existing tables of marine events by removing nine events that no longer take place or do not meet the criteria of a marine event, adding six events that have been occurring on a regular basis, updating the details of one marine event, and modifying the marine event tables for easier reading.

B. Impact on Small Entities

The Regulatory Flexibility Act of 1980, 5 U.S.C. 601–612, as amended, requires Federal agencies to consider the potential impact of regulations on small entities during rulemaking. The term ''small entities'' comprises small businesses, not-for-profit organizations that are independently owned and operated and are not dominant in their fields, and governmental jurisdictions with populations of less than 50,000. The Coast Guard received no comments from the Small Business Administration on this rulemaking. The Coast Guard certifies under 5 U.S.C. 605(b) that this rule will not have a significant economic impact on a substantial number of small entities.

While some owners or operators of vessels intending to transit the safety zone may be small entities, for the reasons stated in section V.A above, this rule will not have a significant economic impact on any vessel owner or operator.

Under section 213(a) of the Small Business Regulatory Enforcement Fairness Act of 1996 (Pub. L. 104–121), we want to assist small entities in understanding this rule. If the rule would affect your small business, organization, or governmental jurisdiction and you have questions concerning its provisions or options for compliance, please call or email the person listed in the **FOR FURTHER INFORMATION CONTACT** section.

Small businesses may send comments on the actions of Federal employees who enforce, or otherwise determine compliance with, Federal regulations to the Small Business and Agriculture Regulatory Enforcement Ombudsman and the Regional Small Business Regulatory Fairness Boards. The Ombudsman evaluates these actions annually and rates each agency's responsiveness to small business. If you wish to comment on actions by employees of the Coast Guard, call 1–888–REG–FAIR (1–888–734–3247). The Coast Guard will not retaliate against small entities that question or complain about this rule or any policy or action of the Coast Guard.

C. Collection of Information

This rule will not call for a new collection of information under the Paperwork Reduction Act of 1995 (44 U.S.C. 3501–3520).

D. Federalism and Indian Tribal Governments

A rule has implications for federalism under Executive Order 13132, Federalism, if it has a substantial direct effect on the States, on the relationship between the National Government and the States, or on the distribution of power and responsibilities among the various levels of government. We have analyzed this rule under that order and have determined that it is consistent with the fundamental federalism

principles and preemption requirements described in Executive Order 13132.

Also, this rule does not have tribal implications under Executive Order 13175, Consultation and Coordination with Indian Tribal Governments, because it does not have a substantial direct effect on one or more Indian tribes, on the relationship between the Federal Government and Indian tribes, or on the distribution of power and responsibilities between the Federal Government and Indian tribes. If you believe this rule has implications for federalism or Indian tribes, please call or email the person listed in the **FOR FURTHER INFORMATION CONTACT** section.

E. Unfunded Mandates Reform Act

The Unfunded Mandates Reform Act of 1995 (2 U.S.C. 1531–1538) requires Federal agencies to assess the effects of their discretionary regulatory actions. In particular, the Act addresses actions that may result in the expenditure by a State, local, or tribal government, in the aggregate, or by the private sector of $100,000,000 (adjusted for inflation) or more in any one year. Though this rule will not result in such an expenditure, we do discuss the effects of this rule elsewhere in this preamble.

F. Environment

We have analyzed this rule under Department of Homeland Security Directive 023–01 and Environmental Planning COMDTINST 5090.1 (series), which guide the Coast Guard in complying with the National Environmental Policy Act of 1969 (42 U.S.C. 4321–4370f), and have determined that this action is one of a category of actions that do not individually or cumulatively have a significant effect on the human environment. This rule involves the amendment of existing marine event tables found in 33 CFR 100.801 to accurately reflect recurring marine events taking place within the Eighth Coast Guard District. Normally such actions are categorically excluded from further review under paragraph L61 of Appendix A, Table 1 of DHS Instruction Manual 023–01–001–01, Rev. 01. A Record of Environmental Consideration supporting this determination is available in the docket where indicated under **ADDRESSES**.

G. Protest Activities

The Coast Guard respects the First Amendment rights of protesters. Protesters are asked to call or email the person listed in the **FOR FURTHER INFORMATION CONTACT** section to coordinate protest activities so that your message can be received without jeopardizing the safety or security of people, places or vessels.

List of Subjects in 33 CFR Part 100

Marine safety, Navigation (water), Reporting and recordkeeping requirements, Waterways.

For the reasons discussed in the preamble, the Coast Guard is amending 33 CFR part 100 as follows:

PART 100—SAFETY OF LIFE ON NAVIGABLE WATERS

■ 1. The authority citation for part 100 continues to read as follows:

Authority: 46 U.S.C. 70041; 33 CFR 1.05–1.

■ 2. Amend § 100.801 by revising the introductory text, paragraphs (f), (i), and (j), and Table 2 to § 100.801 to read as follows:

§ 100.801 Annual Events in the Eighth Coast Guard District.

The regulations in this section apply to the marine events listed in Tables 1 through 7 of this section. These regulations will be effective annually, for the duration of each event listed in Tables 1 through 7. Annual notice of the exact dates and times of the effective period of the regulation with respect to each event, the geographical area, and details concerning the nature of the event and the number of participants and type(s) of vessels involved will also be published in local notices to mariners. Sponsors of events listed in Tables 1 through 7 of this section must submit an application each year in accordance with § 100.15.

* * * * *

(f) Any spectator vessel may anchor outside the regulated area specified in Tables 1 through 7 of this section, but may not anchor in, block, or loiter in a navigable channel.

* * * * *

(i) In Tables 1 through 7 to this section, where a regulated area is described by reference to miles of a river, channel or lake, the regulated area includes all waters between the indicated miles as defined by lines drawn perpendicular to shore passing through the indicated points.

* * * * *

(j) In Tables 1 through 7 to this section, where alternative dates are described (''third or fourth Saturday''), the exact date and times will be advertised by the Coast Guard through Local Notices to Mariners and Broadcast Notices to Mariners.

* * * * *

TABLE 2 OF § 100.801—SECTOR UPPER MISSISSIPPI RIVER ANNUAL AND RECURRING MARINE EVENTS

Date	Event	City, State	Regulated area
Kaskaskia River:			
1. 2 days—Second or Third Weekend of July.	Evansville, IL Drag Boat Races.	Evansville, IL	Mile markers 11.0–10.0.
Lake of the Ozarks:			
2. 2 days—The weekend before Labor Day weekend.	Lake of the Ozarks Shootout.	Sunrise Beach, MO	Mile markers 34.5–32.5.
3. 1 day—Third Saturday of July	Aquapalooza	Osage Beach, MO	Mile markers 19.3–18.7.
4. 1 day—First Saturday of June	Lake Race	Lake Ozark, MO	Mile markers 4.0–0.0.
Upper Mississippi River:			
5. 4 days—Either the first or second week of July.	Riverfest	La Crosse, WI	Mile markers 698.5–697.5.
6. 2 days—Second weekend of August	Great River Tug	LeClaire, IA/Port Byron, IL	Mile markers 497.6–497.2.
7. 1 day—Third weekend of August	Floatzilla	Bettendorf, IA/Davenport, IA/East Moline, IL/Rock Island, IL.	Mile markers 491.0–479.0.

* * * * *

Dated: January 3, 2020.

J.P. Nadeau,

Rear Admiral, U.S. Coast Guard, Commander, Eighth Coast Guard District.

[FR Doc. 2020–00143 Filed 1–13–20; 8:45 am]

BILLING CODE 9110–04–P

DEPARTMENT OF HOMELAND SECURITY

Coast Guard

33 CFR Part 165

[Docket Number USCG–2019–0765]

RIN 1625–AA00

Safety Zones; Waterway Training Areas, Captain of the Port Maryland-National Capital Region Zone

AGENCY: Coast Guard, DHS.

ACTION: Final rule.

SUMMARY: The Coast Guard is establishing four safety zones for certain waters of the Patapsco River, Chesapeake Bay, and Potomac River. This action is necessary to provide for the safety of life on these navigable waters at Baltimore Harbor Anchorage No. 5, between Belvidere Shoal and Kent Island, MD, between Point Lookout, MD, and St. George Island, MD, and between Possum Point, VA, and Cockpit Point, VA, during non-lethal signaling and warning device training conducted from on board U.S. Coast Guard vessels. This regulation prohibits persons and vessels from being in the safety zone unless authorized by the Captain of the Port Maryland-National Capital Region or a designated representative.

DATES: This rule is effective February 13, 2020.

ADDRESSES: To view documents mentioned in this preamble as being available in the docket, go to *https://www.regulations.gov,* type USCG–2019–0765 in the ''SEARCH'' box and click ''SEARCH.'' Click on Open Docket Folder on the line associated with this rule.

FOR FURTHER INFORMATION CONTACT: If you have questions on this rule, call or email Mr. Ron Houck, Sector Maryland-National Capital Region Waterways Management Division, U.S. Coast Guard; telephone 410–576–2674, email *Ronald.L.Houck@uscg.mil.*

SUPPLEMENTARY INFORMATION:

I. Table of Abbreviations

CFR Code of Federal Regulations
COTP Captain of the Port
DHS Department of Homeland Security
FR Federal Register
NM Nautical mile
NPRM Notice of proposed rulemaking
§ Section
U.S.C. United States Code

II. Background Information and Regulatory History

To maintain ports, waterways and coastal security mission readiness, Coast Guard personnel within the Maryland-National Capital Region COTP Zone must conduct LA51 device training shoreward of the 12 nautical miles (NM) baseline. To better accommodate this training need, the COTP Maryland-National Capital Region determined it must establish four LA51 device waterway training areas in the Patapsco River, Chesapeake Bay, and Potomac River. In response, on November 29, 2019, the Coast Guard published a notice of proposed rulemaking (NPRM) titled ''Safety Zones; Waterway Training Areas, Captain of the Port Maryland-National Capital Region Zone'' (84 FR 65730). There we stated why we issued the NPRM, and invited comments on our proposed regulatory action related to the waterway training areas. During the comment period that ended December 30, 2019, we received no comments.

III. Legal Authority and Need for Rule

The Coast Guard is issuing this rule under authority in 46 U.S.C. 70034 (previously 33 U.S.C. 1231). The Captain of the Port Maryland-National Capital Region (COTP) has determined that potential hazards associated with the LA51 device training would be a safety concern for anyone within the waterway training areas. The purpose of this rule is to ensure safety of vessels and the navigable waters within the waterway training areas before, during, and after the training events.

IV. Discussion of Comments, Changes, and the Rule

As noted above, we received no comments on our NPRM published November 29, 2019. There are no changes in the regulatory text of this rule from the proposed rule in the NPRM.

This rule establishes four safety zones for use as waterway training areas.

Waterway training area Alpha includes all waters of the Patapsco River encompassed by a line connecting the following points beginning at 39°14′07.98″ N, 076°32′58.50″ W; thence to 39°13′34.98″ N, 076°32′24.00″ W; thence to 39°13′22.50″ N, 076°32′28.98″ W; thence to 39°13′21.00″ N, 076°33′12.00″ W; and back to the beginning point. Waterway training area Alpha is located at the entrance to Curtis Bay, in Baltimore Harbor Anchorage No. 5, at Baltimore, MD. The safety zone is a trapezoid in shape measuring approximately 1,500 yards in length and averaging 750 yards in width.

Waterway training area Bravo includes all waters of the Chesapeake Bay encompassed by a line connecting the following points beginning at 39°05′25.98″ N, 076°20′20.04″ W; thence to 39°04′40.02″ N, 076°19′28.98″ W; thence to 39°02′45.00″ N, 076°22′09.00″ W; thence to 39°03′30.00″ N, 076°23′00.00″ W; and back to the beginning point. Waterway training area Bravo is located in the approaches to Baltimore Harbor, between Belvidere Shoal and Kent Island, MD. The safety zone is a rectangle in shape situated along a northeast-southwest axis, measuring approximately 4,500 yards in length by 1,500 yards in width.

Waterway training area Charlie includes all waters of the Potomac River encompassed by a line connecting the following points beginning at 38°00′28.80″ N, 076°22′43.80″ W; thence to 38°01′18.00″ N, 076°21′54.00″ W; thence to 38°05′06.00″ N, 076°27′43.20″ W; thence to 38°04′40.20″ N, 076°28′34.20″ W; and back to the beginning point. Waterway training area Charlie is located between Point Lookout, MD, and St. George Island, MD. The safety zone is a rectangle in shape measuring approximately 12,500 yards in length by 1,500 yards in width.

Waterway training area Delta includes all waters of the Potomac River encompassed by a line connecting the following points beginning at 38°32′31.14″ N, 077°15′29.82″ W; thence to 38°32′48.18″ N, 077°15′54.24″ W; thence to 38°33′34.56″ N, 077°15′07.20″ W; thence to 38°33′15.06″ N, 077°14′39.54″ W; and back to the beginning point. Waterway training area Delta is located between Possum Point, VA, and Cockpit Point, VA. The safety zone is a trapezoid in shape measuring approximately 2,000 in length by 1,000 yards in width.

The duration and enforcement of the zones is intended to ensure the safety of vessels and these navigable waters before, during, and after these training events. Except for training participants, no vessel or person will be permitted to enter the safety zone without obtaining permission from the COTP Maryland-National Capital Region or a designated representative.

V. Regulatory Analyses

We developed this rule after considering numerous statutes and Executive orders related to rulemaking.

Below we summarize our analyses based on a number of these statutes and Executive orders, and we discuss First Amendment rights of protestors.

A. Regulatory Planning and Review

Executive Orders 12866 and 13563 direct agencies to assess the costs and benefits of available regulatory alternatives and, if regulation is necessary, to select regulatory approaches that maximize net benefits. Executive Order 13771 directs agencies to control regulatory costs through a budgeting process. This rule has not been designated a ''significant regulatory action,'' under Executive Order 12866. Accordingly, this rule has not been reviewed by the Office of Management and Budget (OMB), and pursuant to OMB guidance it is exempt from the requirements of Executive Order 13771.

This regulatory action determination is based on the size, duration, and location of the safety zones. It is anticipated that each of these four safety zones will be activated for six separate events annually. Although vessel traffic may not be able to safely transit around two of these safety zones while being enforced, both of which are on the Potomac River, the impact will be for 2 hours or less and such vessels will be able to seek permission to enter and transit these safety zones by contacting the COTP Maryland-National Capital Region or a designated representative by telephone or on VHF–FM channel 16. Moreover, the Coast Guard will issue a Broadcast Notice to Mariners via Marine Band Radio VHF–FM channel 16 about the zone.

B. Impact on Small Entities

The Regulatory Flexibility Act of 1980, 5 U.S.C. 601–612, as amended, requires Federal agencies to consider the potential impact of regulations on small entities during rulemaking. The term ''small entities'' comprises small businesses, not-for-profit organizations that are independently owned and operated and are not dominant in their fields, and governmental jurisdictions with populations of less than 50,000. The Coast Guard received no comments from the Small Business Administration on this rulemaking. The Coast Guard certifies under 5 U.S.C. 605(b) that this rule will not have a significant economic impact on a substantial number of small entities.

While some owners or operators of vessels intending to transit the safety zone may be small entities, for the reasons stated in section V.A above, this rule will not have a significant economic impact on any vessel owner or operator.

Under section 213(a) of the Small Business Regulatory Enforcement Fairness Act of 1996 (Pub. L. 104–121), we want to assist small entities in understanding this rule. If the rule would affect your small business, organization, or governmental jurisdiction and you have questions concerning its provisions or options for compliance, please call or email the person listed in the **FOR FURTHER INFORMATION CONTACT** section.

Small businesses may send comments on the actions of Federal employees who enforce, or otherwise determine compliance with, Federal regulations to the Small Business and Agriculture Regulatory Enforcement Ombudsman and the Regional Small Business Regulatory Fairness Boards. The Ombudsman evaluates these actions annually and rates each agency's responsiveness to small business. If you wish to comment on actions by employees of the Coast Guard, call 1–888–REG–FAIR (1–888–734–3247). The Coast Guard will not retaliate against small entities that question or complain about this rule or any policy or action of the Coast Guard.

C. Collection of Information

This rule will not call for a new collection of information under the Paperwork Reduction Act of 1995 (44 U.S.C. 3501–3520).

D. Federalism and Indian Tribal Governments

A rule has implications for federalism under Executive Order 13132, Federalism, if it has a substantial direct effect on the States, on the relationship between the National Government and the States, or on the distribution of power and responsibilities among the various levels of government. We have analyzed this rule under that Order and have determined that it is consistent with the fundamental federalism principles and preemption requirements described in Executive Order 13132.

Also, this rule does not have tribal implications under Executive Order 13175, Consultation and Coordination with Indian Tribal Governments, because it does not have a substantial direct effect on one or more Indian tribes, on the relationship between the Federal Government and Indian tribes, or on the distribution of power and responsibilities between the Federal Government and Indian tribes. If you believe this rule has implications for federalism or Indian tribes, please call or email the person listed in the **FOR FURTHER INFORMATION CONTACT** section.

E. Unfunded Mandates Reform Act

The Unfunded Mandates Reform Act of 1995 (2 U.S.C. 1531–1538) requires Federal agencies to assess the effects of their discretionary regulatory actions. In particular, the Act addresses actions that may result in the expenditure by a State, local, or tribal government, in the aggregate, or by the private sector of $100,000,000 (adjusted for inflation) or more in any one year. Though this rule will not result in such an expenditure, we do discuss the effects of this rule elsewhere in this preamble.

F. Environment

We have analyzed this rule under Department of Homeland Security Directive 023–01, Rev. 1, associated implementing instructions, and Environmental Planning COMDTINST 5090.1 (series), which guide the Coast Guard in complying with the National Environmental Policy Act of 1969 (42 U.S.C. 4321–4370f), and have determined that this action is one of a category of actions that do not individually or cumulatively have a significant effect on the human environment. This rule involves four safety zones that, when activated, will last 48 enforcement hours annually and prohibit entry within portions of the Patapsco River, Chesapeake Bay, and Potomac River. It is categorically excluded from further review under paragraph L60(a) of Appendix A, Table 1 of DHS Instruction Manual 023–01–001–01, Rev. 1. A Record of Environmental Consideration supporting this determination is available in the docket. For instructions on locating the docket, see the **ADDRESSES** section of this preamble.

G. Protest Activities

The Coast Guard respects the First Amendment rights of protesters. Protesters are asked to call or email the person listed in the **FOR FURTHER INFORMATION CONTACT** section to coordinate protest activities so that your message can be received without jeopardizing the safety or security of people, places or vessels.

List of Subjects in 33 CFR Part 165

Harbors, Marine safety, Navigation (water), Reporting and recordkeeping requirements, Security measures, Waterways.

For the reasons discussed in the preamble, the Coast Guard amends 33 CFR part 165 as follows:

PART 165—REGULATED NAVIGATION AREAS AND LIMITED ACCESS AREAS

■ 1. The authority citation for part 165 continues to read as follows:

Authority: 46 U.S.C. 70034, 70051; 33 CFR 1.05–1, 6.04–1, 6.04–6, and 160.5; Department of Homeland Security Delegation No. 0170.1.

■ 2. Add § 165.516 to read as follows:

§ 165.516 Safety Zones; Waterway Training Areas, Captain of the Port Maryland-National Capital Region Zone.

(a) *Regulated areas.* The following areas are established as safety zones (these coordinates are based on Datum NAD 83):

(1) *Waterway training area Alpha.* All waters of the Patapsco River, encompassed by a line connecting the following points beginning at 39°14′07.98″ N, 076°32′58.50″ W; thence to 39°13′34.98″ N, 076°32′24.00″ W; thence to 39°13′22.50″ N, 076°32′28.98″ W; thence to 39°13′21.00″ N, 076°33′12.00″ W; and back to the beginning point.

(2) *Waterway training area Bravo.* All waters of the Chesapeake Bay, encompassed by a line connecting the following points beginning at 39°05′25.98″ N, 076°20′20.04″ W; thence to 39°04′40.02″ N, 076°19′28.98″ W; thence to 39°02′45.00″ N, 076°22′09.00″ W; thence to 39°03′30.00″ N, 076°23′00.00″ W; and back to the beginning point.

(3) *Waterway training area Charlie.* All waters of the Potomac River, encompassed by a line connecting the following points beginning at 38°00′28.80″ N, 076°22′43.80″ W; thence to 38°01′18.00″ N, 076°21′54.00″ W; thence to 38°05′06.00″ N, 076°27′43.20″ W; thence to 38°04′40.20″ N, 076°28′34.20″ W; and back to the beginning point.

(4) *Waterway training area Delta.* All waters of the Potomac River, encompassed by a line connecting the following points beginning at 38°32′31.14″ N, 077°15′29.82″ W; thence to 38°32′48.18″ N, 077°15′54.24″ W; thence to 38°33′34.56″ N, 077°15′07.20″ W; thence to 38°33′15.06″ N, 077°14′39.54″ W; and back to the beginning point.

(b) *Definitions.* As used in this section—

Captain of the Port (COTP) means the Commander, U.S. Coast Guard Sector Maryland-National Capital Region.

Designated representative means a Coast Guard commissioned, warrant, or petty officer designated by or assisting the COTP in the enforcement of the safety zones.

Training participant means a person or vessel authorized by the COTP as participating in the training event or otherwise designated by the COTP or the COTP's designated representative as having a function tied to the training event.

(c) *Regulations.* (1) Under the general safety zone regulations in subpart C of this part, you may not enter the safety zones described in paragraph (a) of this section unless authorized by the COTP or the COTP's designated representative.

(2) Except for training participants, all vessels underway within this safety zone at the time it is activated are to depart the zone. To seek permission to enter, contact the COTP or the COTP's designated representative by telephone number 410–576–2693 or on Marine Band Radio VHF–FM channel 16 (156.8 MHz). The Coast Guard vessels enforcing this section can be contacted on Marine Band Radio VHF–FM channel 16 (156.8 MHz). Those in the safety zone must comply with all lawful orders or directions given to them by the COTP or the COTP's designated representative.

(3) The U.S. Coast Guard may be assisted in the patrol and enforcement of the safety zone by Federal, State, and local agencies.

(d) *Enforcement.* The safety zones created by this section will be enforced only upon issuance of a Broadcast Notice to Mariners (BNM) by the COTP or the COTP's representative, as well as on-scene notice or other appropriate means in accordance with § 165.7.

Dated: January 7, 2020.

Joseph B. Loring,

Captain, U.S. Coast Guard, Captain of the Port Maryland-National Capital Region.

[FR Doc. 2020–00280 Filed 1–13–20; 8:45 am]

BILLING CODE 9110–04–P

DEPARTMENT OF EDUCATION

34 CFR Parts 36 and 668

RIN 1801–AA20

Adjustment of Civil Monetary Penalties for Inflation

AGENCY: Department of Education.

ACTION: Final regulations.

SUMMARY: The Department of Education (Department) issues these final regulations to adjust the Department's civil monetary penalties (CMPs) for inflation. This adjustment is required by the Federal Civil Penalties Inflation Adjustment Act Improvements Act of 2015 (2015 Act), which amended the Federal Civil Penalties Inflation Adjustment Act of 1990 (Inflation Adjustment Act). These final regulations provide the 2020 annual inflation adjustments being made to the penalty amounts in the Department's final regulations published in the **Federal Register** on February 1, 2019 (2019 final rule). This rule was previously reported as RIN 1801–AA19.

DATES: These regulations are effective January 14, 2020. The adjusted CMPs established by these regulations are applicable only to civil penalties assessed after January 14, 2020 whose associated violations occurred after November 2, 2015.

FOR FURTHER INFORMATION CONTACT: Levon Schlichter, U.S. Department of Education, Office of the General Counsel, 400 Maryland Avenue SW, Room 6E235, Washington, DC 20202–2241. Telephone: (202) 453–6387. Email: *levon.schlichter@ed.gov.*

If you use a telecommunications device for the deaf (TDD) or a text telephone (TTY), call the Federal Relay Service, toll free, at 1–800–877–8339.

Individuals with disabilities can obtain this document in an accessible format (*e.g.,* braille, large print, audiotape, or compact disc) on request to the contact person listed in this section.

SUPPLEMENTARY INFORMATION:

Background: A CMP is defined in the Inflation Adjustment Act (28 U.S.C. 2461 note) as any penalty, fine, or other sanction that is (1) for a specific monetary amount as provided by Federal law, or has a maximum amount provided for by Federal law; (2) assessed or enforced by an agency pursuant to Federal law; and (3) assessed or enforced pursuant to an administrative proceeding or a civil action in the Federal courts.

The Inflation Adjustment Act provides for the regular evaluation of CMPs to ensure that they continue to maintain their deterrent value. The Inflation Adjustment Act required that each agency issue regulations to adjust its CMPs beginning in 1996 and at least every four years thereafter. The Department published its most recent cost adjustment to its CMPs in the **Federal Register** on February 1, 2019 (84 FR 971), and those adjustments became effective on the date of publication.

The 2015 Act (section 701 of Pub. L. 114–74) amended the Inflation Adjustment Act to improve the effectiveness of CMPs and to maintain their deterrent effect.

The 2015 Act requires agencies to: (1) Adjust the level of CMPs with an initial ''catch-up'' adjustment through an

interim final rule (IFR); and (2) make subsequent annual adjustments for inflation. Catch-up adjustments are based on the percentage change between the Consumer Price Index for all Urban Consumers (CPI–U) for the month of October in the year the penalty was last adjusted by a statute other than the Inflation Adjustment Act, and the October 2015 CPI–U. Annual inflation adjustments are based on the percentage change between the October CPI–U preceding the date of each statutory adjustment, and the prior year's October CPI–U.[1] The Department published an IFR with the initial ''catch-up'' penalty adjustment amounts on August 1, 2016 (81 FR 50321).

In these final regulations, based on the CPI–U for the month of October 2019, not seasonally adjusted, we are annually adjusting each CMP amount by a multiplier for 2020 of 1.01764, as directed by the Office of Management and Budget (OMB) Memorandum No. M–20–05 issued on December 16, 2019.

The Department's Civil Monetary Penalties: The following analysis calculates new CMPs for penalty statutes in the order in which they appear in 34 CFR 36.2. The penalty amounts are being adjusted up based on the multiplier of 1.01764 provided in OMB Memorandum No. M–20–05.

Statute: 20 U.S.C. 1015(c)(5).

Current Regulations: The CMP for 20 U.S.C. 1015(c)(5) (Section 131(c)(5) of the Higher Education Act of 1965, as amended (HEA)), as last set out in statute in 1998 (Pub. L. 105–244, title I, sec. 101(a), October 7, 1998, 112 Stat. 1602), is a fine of up to $25,000 for failure by an institution of higher education (IHE) to provide information on the cost of higher education to the Commissioner of Education Statistics. In the 2019 final rule, we increased this amount to $38,549.

New Regulations: The new penalty for this section is $39,229.

Reason: Using the multiplier of 1.01764 from OMB Memorandum No. M–20–05, the new penalty is calculated as follows: $38,549 × 1.01764 = $39,229.00, which makes the adjusted penalty $39,229, when rounded to the nearest dollar.

Statute: 20 U.S.C. 1022d(a)(3).

Current Regulations: The CMP for 20 U.S.C. 1022d(a)(3) (Section 205(a)(3) of the HEA), as last set out in statute in 2008 (Pub. L. 110–315, title II, sec. 201(2), August 14, 2008, 122 Stat. 3147), is a fine of up to $27,500 for failure by an IHE to provide information to the State and the public regarding its teacher-preparation programs. In the 2019 final rule, we increased this amount to $32,110.

New Regulations: The new penalty for this section is $32,676.

Reason: Using the multiplier of 1.01764 from OMB Memorandum No. M–20–05, the new penalty is calculated as follows: $32,110 × 1.01764 = $32,676.42, which makes the adjusted penalty $32,676, when rounded to the nearest dollar.

Statute: 20 U.S.C. 1082(g).

Current Regulations: The CMP for 20 U.S.C. 1082(g) (Section 432(g) of the HEA), as last set out in statute in 1986 (Pub. L. 99–498, title IV, sec. 402(a), October 17, 1986, 100 Stat. 1401), is a fine of up to $25,000 for violations by lenders and guaranty agencies of Title IV of the HEA, which authorizes the Federal Family Education Loan Program. In the 2019 final rule, we increased this amount to $57,317.

New Regulations: The new penalty for this section is $58,328.

Reason: Using the multiplier of 1.01764 from OMB Memorandum No. M–20–05, the new penalty is calculated as follows: $57,317 × 1.01764 = $58,328.07, which makes the adjusted penalty $58,328, when rounded to the nearest dollar.

Statute: 20 U.S.C. 1094(c)(3)(B).

Current Regulations: The CMP for 20 U.S.C. 1094(c)(3)(B) (Section 487(c)(3)(B) of the HEA), as set out in statute in 1986 (Pub. L. 99–498, title IV, sec. 407(a), October 17, 1986, 100 Stat. 1488), is a fine of up to $25,000 for an IHE's violation of Title IV of the HEA or its implementing regulations. Title IV authorizes various programs of student financial assistance. In the 2019 final rule, we increased this amount to $57,317.

New Regulations: The new penalty for this section is $58,328.

Reason: Using the multiplier of 1.01764 from OMB Memorandum No. M–20–05, the new penalty is calculated as follows: $57,317 × 1.01764 = $58,328.07, which makes the adjusted penalty $58,328, when rounded to the nearest dollar.

Statute: 20 U.S.C. 1228c(c)(2)(E).

Current Regulations: The CMP for 20 U.S.C. 1228c(c)(2)(E) (Section 429 of the General Education Provisions Act), as set out in statute in 1994 (Pub. L. 103–382, title II, sec. 238, October 20, 1994, 108 Stat. 3918), is a fine of up to $1,000 for an educational organization's failure to disclose certain information to minor students and their parents. In the 2019 final rule, we increased this amount to $1,692.

New Regulations: The new penalty for this section is $1,722.

Reason: Using the multiplier of 1.01764 from OMB Memorandum No. M–20–05, the new penalty is calculated as follows: $1,692 × 1.01764 = $1,721.85, which makes the adjusted penalty $1,722, when rounded to the nearest dollar.

Statute: 31 U.S.C. 1352(c)(1) and (c)(2)(A).

Current Regulations: The CMPs for 31 U.S.C. 1352(c)(1) and (c)(2)(A), as set out in statute in 1989 (Pub. L. 101–121, title III, sec. 319(a)(1), October 23, 1989, 103 Stat. 750), are a fine of $10,000 to $100,000 for recipients of Government grants, contracts, etc. that improperly lobby Congress or the Executive Branch with respect to the award of Government grants and contracts. In the 2019 final rule, we increased these amounts to $20,134 to $201,340.

New Regulations: The new penalties for these sections are $20,489 to $204,892.

Reason: Using the multiplier of 1.01764 from OMB Memorandum No. M–20–05, the new minimum penalty is calculated as follows: $20,134 × 1.01764 = $20,489.16, which makes the adjusted penalty $20,489, when rounded to the nearest dollar. The new maximum penalty is calculated as follows: $201,340 × 1.01764 = $204,891.64, which makes the adjusted penalty $204,892, when rounded to the nearest dollar.

Statute: 31 U.S.C. 3802(a)(1) and (a)(2).

Current Regulations: The CMPs for 31 U.S.C. 3802(a)(1) and (a)(2), as set out in statute in 1986 (Pub. L. 99–509, title VI, sec. 6103(a), Oct. 21, 1986, 100 Stat. 1937), are a fine of up to $5,000 for false claims and statements made to the Government. In the 2019 final rule, we increased this amount to $11,463.

New Regulations: The new penalty for this section is $11,665.

Reason: Using the multiplier of 1.01764 from OMB Memorandum No. M–20–05, the new penalty is calculated as follows: $11,463 × 1.01764 = $11,665.21, which makes the adjusted penalty $11,665, when rounded to the nearest dollar.

Executive Orders 12866, 13563, and 13771

Regulatory Impact Analysis

Under Executive Order 12866, it must be determined whether this regulatory action is ''significant'' and, therefore, subject to the requirements of the Executive order and subject to review by OMB. Section 3(f) of Executive Order 12866 defines a significant regulatory

[1] If a statute that created a penalty is amended to change the penalty amount, the Department does not adjust the penalty in the year following the adjustment.

action as an action likely to result in a rule that may—

(1) Have an annual effect on the economy of $100 million or more, or adversely affect a sector of the economy; productivity; competition; jobs; the environment; public health or safety; or State, local, or Tribal governments or communities in a material way (also referred to as ''economically significant'' regulations);

(2) Create serious inconsistency or otherwise interfere with an action taken or planned by another agency;

(3) Materially alter the budgetary impacts of entitlement grants, user fees, or loan programs or the rights and obligations of recipients thereof; or

(4) Raise novel legal or policy issues arising out of legal mandates, the President's priorities, or the principles stated in the Executive order.

We have determined that these final regulations: (1) Exclusively implement the annual adjustment; (2) are consistent with OMB Memorandum No. M–20–05; and (3) have an annual impact of less than $100 million. Therefore, based on OMB Memorandum No. M–20–05, this is not a significant regulatory action subject to review by OMB under section 3(f) of Executive Order 12866.

We have also reviewed these regulations under Executive Order 13563, which supplements and explicitly reaffirms the principles, structures, and definitions governing regulatory review established in Executive Order 12866. To the extent permitted by law, Executive Order 13563 requires that an agency—

(1) Propose or adopt regulations only upon a reasoned determination that their benefits justify their costs (recognizing that some benefits and costs are difficult to quantify);

(2) Tailor its regulations to impose the least burden on society, consistent with obtaining regulatory objectives and taking into account, among other things, and to the extent practicable, the costs of cumulative regulations;

(3) In choosing among alternative regulatory approaches, select those approaches that maximize net benefits (including potential economic, environmental, public health and safety, and other advantages; distributive impacts; and equity);

(4) To the extent feasible, specify performance objectives, rather than the behavior or manner of compliance a regulated entity must adopt; and

(5) Identify and assess available alternatives to direct regulation, including economic incentives—such as user fees or marketable permits—to encourage the desired behavior, or providing information that enables the public to make choices.

Executive Order 13563 also requires an agency ''to use the best available techniques to quantify anticipated present and future benefits and costs as accurately as possible.'' The Office of Information and Regulatory Affairs of OMB has emphasized that these techniques may include ''identifying changing future compliance costs that might result from technological innovation or anticipated behavioral changes.''

We are issuing these final regulations as required by statute and in accordance with OMB Memorandum No. M–20–05. The Secretary has no discretion to consider alternative approaches as delineated in the Executive order. Based on this analysis and the reasons stated in the preamble, the Department believes that these final regulations are consistent with the principles in Executive Order 13563.

Under Executive Order 13771, for each new regulation that the Department proposes for notice and comment or otherwise promulgates that is a significant regulatory action under Executive Order 12866 and that imposes total costs greater than zero, it must identify two deregulatory actions. For fiscal year 2020, any new incremental costs associated with a new regulation must be fully offset by the elimination of existing costs through deregulatory actions. These final regulations are not a significant regulatory action. Therefore, the requirements of Executive Order 13771 do not apply.

Waiver of Rulemaking and Delayed Effective Date

Under the Administrative Procedure Act (APA) (5 U.S.C. 553), the Department generally offers interested parties the opportunity to comment on proposed regulations. However, section 4(b)(2) of the 2015 Act (28 U.S.C. 2461 note) provides that the Secretary can adjust these 2020 penalty amounts notwithstanding the requirements of 5 U.S.C. 553. Therefore, the requirements of 5 U.S.C. 553 for notice and comment and delaying the effective date of a final rule do not apply here.

Regulatory Flexibility Act Certification

Pursuant to 5 U.S.C. 601(2), the Regulatory Flexibility Act applies only to rules for which an agency publishes a general notice of proposed rulemaking. The Regulatory Flexibility Act does not apply to this rulemaking because section 4(b)(2) of the 2015 Act (28 U.S.C. 2461 note) provides that the Secretary can adjust these 2020 penalty amounts without publishing a general notice of proposed rulemaking.

Paperwork Reduction Act of 1995

These regulations do not contain any information collection requirements.

Intergovernmental Review

This program is not subject to Executive Order 12372 and the regulations in 34 CFR part 79.

Assessment of Educational Impact

Based on our own review, we have determined that these regulations do not require transmission of information that any other agency or authority of the United States gathers or makes available.

Electronic Access to This Document: The official version of this document is the document published in the **Federal Register**. You may access the official edition of the **Federal Register** and the Code of Federal Regulations at *www.govinfo.gov*. At this site you can view this document, as well as all other documents of this Department published in the **Federal Register**, in text or Portable Document Format (PDF). To use PDF you must have Adobe Acrobat Reader, which is available free at the site.

You may also access documents of the Department published in the **Federal Register** by using the article search feature at: *www.federalregister.gov*. Specifically, through the advanced search feature at this site, you can limit your search to documents published by the Department.

List of Subjects

34 CFR Part 36

Claims, Fraud, Penalties.

34 CFR Part 668

Administrative practice and procedure, Colleges and universities, Consumer protection, Grant programs—education, Loan programs—education, Reporting and recordkeeping requirements, Selective Service System, Student aid, Vocational education.

Dated: January 9, 2020.

Betsy DeVos,

Secretary of Education.

For the reasons discussed in the preamble, the Secretary amends parts 36 and 668 of title 34 of the Code of Federal Regulations as follows:

PART 36—ADJUSTMENT OF CIVIL MONETARY PENALTIES FOR INFLATION

■ 1. The authority citation for part 36 continues to read as follows:

Authority: 20 U.S.C. 1221e–3 and 3474; 28 U.S.C. 2461 note, as amended by § 701 of Pub. L. 114–74, unless otherwise noted.

■ 2. Section 36.2 is amended by:

■ a. In the introductory text, removing ''Table I'' and adding ''Table 1 of this section'' in its place.

■ b. Redesignating Table I as Table 1 and revising newly redesignated Table 1.

■ c. Removing the parenthetical authority citation at the end of the section.

The revision reads as follows:

§ 36.2 Penalty adjustment.

* * * * *

TABLE 1 TO § 36.2—CIVIL MONETARY PENALTY INFLATION ADJUSTMENTS

Statute	Description	New maximum (and minimum, if applicable) penalty amount
20 U.S.C. 1015(c)(5) (Section 131(c)(5) of the Higher Education Act of 1965 (HEA)).	Provides for a fine, as set by Congress in 1998, of up to $25,000 for failure by an institution of higher education (IHE) to provide information on the cost of higher education to the Commissioner of Education Statistics.	$39,229
20 U.S.C. 1022d(a)(3) (Section 205(a)(3) of the HEA).	Provides for a fine, as set by Congress in 2008, of up to 27,500 for failure by an IHE to provide information to the State and the public regarding its teacher-preparation programs.	32,676
20 U.S.C. 1082(g) (Section 432(g) of the HEA).	Provides for a civil penalty, as set by Congress in 1986, of up to 25,000 for violations by lenders and guaranty agencies of Title IV of the HEA, which authorizes the Federal Family Education Loan Program.	58,328
20 U.S.C. 1094(c)(3)(B) (Section 487(c)(3)(B) of the HEA).	Provides for a civil penalty, as set by Congress in 1986, of up to 25,000 for an IHE's violation of Title IV of the HEA, which authorizes various programs of student financial assistance.	58,328
20 U.S.C. 1228c(c)(2)(E) (Section 429 of the General Education Provisions Act).	Provides for a civil penalty, as set by Congress in 1994, of up to 1,000 for an educational organization's failure to disclose certain information to minor students and their parents.	1,722
31 U.S.C. 1352(c)(1) and (c)(2)(A)	Provides for a civil penalty, as set by Congress in 1989, of 10,000 to 100,000 for recipients of Government grants, contracts, etc. that improperly lobby Congress or the Executive Branch with respect to the award of Government grants and contracts.	20,489 to 204,892
31 U.S.C. 3802(a)(1) and (a)(2)	Provides for a civil penalty, as set by Congress in 1986, of up to 5,000 for false claims and statements made to the Government.	11,665

PART 668—STUDENT ASSISTANCE GENERAL PROVISIONS

■ 3. The authority citation for part 668 continues to read as follows:

Authority: 20 U.S.C. 1001–1003, 1070a, 1070g, 1085, 1087b, 1087d, 1087e, 1088, 1091, 1092, 1094, 1099c, 1099c–1, 1221e–3, and 3474; Pub. L. 111–256, 124 Stat. 2643; unless otherwise noted.

§ 668.84 [Amended]

■ 4. Section 668.84(a)(1) introductory text is amended by removing the number ''$57,317'' and adding in its place the number ''$58,328''.

[FR Doc. 2020–00413 Filed 1–13–20; 8:45 am]

BILLING CODE 4000–01–P

POSTAL SERVICE

39 CFR Part 233

Inspection Service Authority; Civil Monetary Penalty Inflation Adjustment

AGENCY: Postal Service™.

ACTION: Interim final rule.

SUMMARY: This document updates postal regulations by implementing inflation adjustments to civil monetary penalties that may be imposed under consumer protection and mailability provisions enforced by the Postal Service pursuant to the Deceptive Mail Prevention and Enforcement Act and the Postal Accountability and Enhancement Act. These adjustments are required under the Federal Civil Penalties Inflation Adjustment Act of 1990, as amended by the Federal Civil Penalties Inflation Adjustment Act Improvements Act of 2015. This document includes the adjustments for 2020 for statutory civil monetary penalties subject to the 2015 Act.

DATES: *Effective date:* January 14, 2020.

FOR FURTHER INFORMATION CONTACT: Steven Sultan, (202) 268–7385, *SESultan@uspis.gov.*

SUPPLEMENTARY INFORMATION: The Federal Civil Penalties Inflation Adjustment Act Improvements Act of 2015 (2015 Act), Public Law 114–74, 129 Stat. 584, amended the Federal Civil Penalties Inflation Adjustment Act of 1990 (1990 Act), Public Law 101–410, 104 Stat. 890 (28 U.S.C. 2461 note), to improve the effectiveness of civil monetary penalties and to maintain their deterrent effect. Section 3 of the 1990 Act specifically includes the Postal Service in the definition of ''agency'' subject to its provisions.

Beginning in 2017, the 2015 Act requires the Postal Service to make an annual adjustment for inflation to civil penalties that meet the definition of ''civil monetary penalty'' under the 1990 Act. The Postal Service must make the annual adjustment for inflation and publish the adjustment in the **Federal Register** by January 15 of each year. Each penalty will be adjusted as instructed by the Office of Management and Budget (OMB) based on the Consumer Price Index (CPI–U) from the most recent October. OMB has furnished detailed instructions regarding the annual adjustment for 2020 in memorandum M–20–05, *Implementation of Penalty Inflation Adjustments for 2020, Pursuant to the Federal Civil Penalties Inflation Adjustment Act Improvements Act of 2015* (December 16, 2019), *https://www.whitehouse.gov/wp-content/uploads/2019/12/M-20-05.pdf.* This year, OMB has advised that an adjustment multiplier of 1.01764 will be used. The new penalty amount must be rounded to the nearest dollar.

The 2015 Act allows the interim final rule and annual inflation adjustments to be published without prior public

notice or opportunity for public comment.

Adjustments to Postal Service Civil Monetary Penalties

Civil monetary penalties may be assessed for postal offenses under sections 106 and 108 of the Deceptive Mail Prevention and Enforcement Act, Pub. L. 106–168, 113 Stat. 1811, 1814 (*see,* 39 U.S.C. 3012(a), (c)(1), (d), and 3017 (g)(2), (h)(1)(A)); and section 1008 of the Postal Accountability and Enhancement Act, Public Law 109–435, 120 Stat. 3259–3261 (*see,* 39 U.S.C. 3018 (c)(1)(A)). The statutory civil monetary penalties subject to the 2015 Act and the amount of each penalty after implementation of the annual adjustment for inflation are as follows:

39 U.S.C. 3012(a)—False representations and lottery orders.

Under 39 U.S.C. 3005(a)(1)–(3), the Postal Service may issue administrative orders prohibiting persons from using the mail to obtain money through false representations or lotteries. Persons who evade, attempt to evade, or fail to comply with an order to stop such prohibited practices may be liable to the United States for a civil penalty under 39 U.S.C. 3012(a). The regulations implemented pursuant to this section currently impose a $72,669 penalty for each mailing less than 50,000 pieces, $145,335 for each mailing of 50,000 to 100,000 pieces, and $14,535 for each additional 10,000 pieces above 100,000 not to exceed $2,906,718. The new penalties will be as follows: A $73,951 penalty for each mailing less than 50,000 pieces, $147,899 for each mailing of 50,000 to 100,000 pieces, and $14,791 for each additional 10,000 pieces above 100,000 not to exceed $2,957,993.

39 U.S.C. 3012(c)(1)—False representation and lottery penalties in lieu of or as part of an order.

In lieu of or as part of an order issued under 39 U.S.C. 3005(a)(1)–(3), the Postal Service may assess a civil penalty. Currently, the amount of this penalty, set in the implementing regulations to 39 U.S.C. 3012(c)(1), is $36,334 for each mailing that is less than 50,000 pieces, $72,669 for each mailing of 50,000 to 100,000 pieces, and an additional $7,267 for each additional 10,000 pieces above 100,000 not to exceed $1,453,359. The new penalties will be: $36,975 for each mailing that is less than 50,000 pieces, $73,951 for each mailing of 50,000 to 100,000 pieces, and an additional $7,395 for each additional 10,000 pieces above 100,000 not to exceed $1,478,996.

39 U.S.C. 3012(d)—Misleading references to the United States Government; Sweepstakes and deceptive mailings.

Persons sending certain deceptive mail matter described in 39 U.S.C. 3001((h)–(k), including:

- Solicitations making false claims of Federal Government connection or approval;
- Certain solicitations for the purchase of a product or service that may be obtained without cost from the Federal Government;
- Solicitations containing improperly prepared ''facsimile checks''; and
- Certain solicitations for ''skill contests'' and ''sweepstakes'' sent to individuals who, in accordance with 39 U.S.C. 3017(d), have requested that such materials not be mailed to them;

may be liable to the United States for a civil penalty under 39 U.S.C. 3012(d). Currently, under the implementing regulations, this penalty is not to exceed $14,535 for each mailing. The new penalty will be $14,791.

39 U.S.C. 3017(g)(2)—Commercial use of lists of persons electing not to receive skill contest or sweepstakes mailings.

Under 39 U.S.C. 3017(g)(2), the Postal Service may impose a civil penalty against a person who provides information for commercial use about individuals who, in accordance with 39 U.S.C. 3017(d), have elected not to receive certain sweepstakes and contest information. Currently, this civil penalty may not exceed $2,906,718 per violation, pursuant to the implementing regulations. The new penalty may not exceed $2,957,993 per violation.

39 U.S.C. 3017(h)(1)(A)—Reckless mailing of skill contest or sweepstakes matter.

Currently, under 39 U.S.C. 3017(h)(1)(A) and its implementing regulations, any promoter who recklessly mails nonmailable skill contest or sweepstakes matter may be liable to the United States in the amount of $14,535 per violation for each mailing to an individual. The new penalty is $14,791 per violation.

39 U.S.C. 3018(c)(1)(A)—Hazardous material.

Under 39 U.S.C. 3018(c)(1)(A), the Postal Service may impose a civil penalty payable into the Treasury of the United States on a person who knowingly mails nonmailable hazardous materials or fails to follow postal laws on mailing hazardous materials. Currently, this civil penalty is at least $314, but not more than $125,314 for each violation, pursuant to the implementing regulations. The new penalty is at least $320, but not more than $127,525 for each violation.

List of Subjects in 39 CFR Part 233

Administrative practice and procedure, Banks, Banking, Credit, Crime, Infants and children, Law enforcement, Penalties, Privacy, Seizures and forfeitures.

For the reasons set out in this document, the Postal Service amends 39 CFR part 233 as follows:

PART 233—INSPECTION SERVICE AUTHORITY

■ 1. The authority citation for 39 CFR part 233 is revised to read as follows:

Authority: 39 U.S.C. 101, 102, 202, 204, 401, 402, 403, 404, 406, 410, 411, 1003, 3005(e)(1), 3012, 3017, 3018; 12 U.S.C. 3401–3422; 18 U.S.C. 981, 983, 1956, 1957, 2254, 3061; 21 U.S.C. 881; Pub. L. 101–410, 104 Stat. 890 (28 U.S.C. 2461 note); Pub. L. 104–208, 110 Stat. 3009; Secs. 106 and 108, Pub. L. 106–168, 113 Stat. 1806 (39 U.S.C. 3012, 3017); Pub. L. 114–74, 129 Stat. 584.

§ 233.12 [Amended]

■ 2. In § 233.12:

■ a. In paragraph (a), remove ''$72,669'' and add in its place ''$73,951'', remove ''$145,335'' and add in its place ''$147,899'', remove ''$100,000 pieces'' and add in its place ''100,000 pieces'', remove ''$14,535'' and add in its place ''$14,791'', and remove ''$2,906,718'' and add in its place ''$2,957,993''.

■ b. In paragraph (b), remove ''$36,334'' and add in its place ''$36,975'', remove ''$72,669'' and add in its place ''$73,951'', remove ''$7,267'' and add in its place ''$7,395'', and remove ''$1,453,359'' and add in its place ''$1,478,996''.

■ c. In paragraph (c)(4), remove ''$14,535'' and add in its place ''$14,791''.

■ d. In paragraph (d), remove ''$2,906,718'' and add in its place ''$2,957,993''.

■ e. In paragraph (e), remove ''$14,535'' and add in its place ''$14,791''.

■ f. In § 233.12(f), remove ''$314'' and add in its place ''$320'' and remove ''$125,314'' and add in its place ''$127,525''.

Brittany M. Johnson,

Attorney, Federal Compliance.

[FR Doc. 2020–00028 Filed 1–13–20; 8:45 am]

BILLING CODE 7710–12–P

ENVIRONMENTAL PROTECTION AGENCY

40 CFR Part 271

[EPA–R09–RCRA–2019–0491; FRL–10003–98–Region 9]

California: Final Authorization of State Hazardous Waste Management Program Revisions

AGENCY: Environmental Protection Agency (EPA).

ACTION: Final authorization.

SUMMARY: The Environmental Protection Agency (EPA) is granting final authorization of the changes to the hazardous waste program submitted by California. As a result of EPA's authorization, California's revised program will become part of the authorized state hazardous waste program, and therefore will be federally enforceable. The single adverse comment received is outside the scope of the approval. As such, EPA concludes that no comments received on the subject of this action warrant any changes to the proposed authorization.

DATES: This final authorization is effective January 14, 2020.

FOR FURTHER INFORMATION CONTACT: Laurie Amaro, EPA Region 9, 75 Hawthorne St., San Francisco, CA 94105. By phone: (415) 972–3364 or by email at *Amaro.Laurie@epa.gov.*

SUPPLEMENTARY INFORMATION:

A. Authorization of Revisions to the California's Hazardous Waste Program

On July 10, 2019, California submitted a final complete program revision application seeking authorization of the State's changes relating to its ''universal waste'' program in accordance with 40 CFR 271.21. The Agency published a proposed rule on October 18, 2019 (84 FR 55871) and requested public comment. Most comments received were in support of the action; however, one comment was critical of the California Department of Toxic Substances Control's ''enforcement actions against universal waste recyclers accepting appliances that contain MRSH.'' We believe this comment refers to California requirements that materials that require special handling (MRSH) must be removed prior to processing major appliances for scrap metal (California Public Resources Code section 42175; Health and Safety Code section 25212) and related requirements for appliance recyclers to comply with California's Certified Appliance Recycler (CAR) Program (California Health and Safety Code section 25211, *et seq.*). These provisions are not included in this approval and may not be addressed by this action. Since the single adverse comment is outside of the scope of EPA's approval of the subject revisions to the State's hazardous waste program, we now make a final decision that California's hazardous waste program revisions satisfy all of the requirements necessary to qualify for final authorization. For a list of rules that are authorized with this final authorization, please see the proposed rule published in the October 18, 2019 **Federal Register** at 84 FR 55871.

B. What is codification and is EPA codifying California's hazardous waste program as authorized in this rule?

Codification is the process of placing the State's statutes and regulations that comprise the State's authorized hazardous waste program into the Code of Federal Regulations. EPA does this by referencing the authorized State rules in 40 CFR part 272. EPA is not codifying the authorization of California's revisions at this time. However, EPA reserves the amendment of 40 CFR part 272, subpart F, for the codification of California's program at a later date.

C. Statutory and Executive Order Reviews

This final authorization revises California's authorized hazardous waste management program pursuant to Section 3006 of RCRA and imposes no requirements other than those currently imposed by State law. For further information on how this authorization complies with applicable Executive orders and statutory provisions, please see the proposed rule published in the October 18, 2019 **Federal Register** at 84 FR 55871.

List of Subjects in 40 CFR Part 271

Environmental protection, Administrative practice and procedure, Confidential business information, Hazardous waste, Hazardous waste transportation, Indian lands, Intergovernmental relations, Penalties, Reporting and recordkeeping requirements.

Authority: This action is issued under the authority of sections 2002(a), 3006, and 7004(b) of the Solid Waste Disposal Act as amended, 42 U.S.C. 6912(a), 6926, and 6974(b).

Dated: December 18, 2019.

Deborah Jordan,

Acting Regional Administrator, Region 9.

[FR Doc. 2020–00180 Filed 1–13–20; 8:45 am]

BILLING CODE 6560–50–P

DEPARTMENT OF HOMELAND SECURITY

Federal Emergency Management Agency

44 CFR Part 206

[Docket ID FEMA–2014–0005]

RIN 1660–AA83

Factors Considered When Evaluating a Governor's Request for Individual Assistance for a Major Disaster; Correction

AGENCY: Federal Emergency Management Agency, DHS.

ACTION: Correcting amendment.

SUMMARY: On March 21, 2019, the Federal Emergency Management Agency (FEMA) published a final rule revising its regulations to update the factors it uses to determine whether to recommend provision of Individual Assistance during a major disaster. That final rule inadvertently failed to remove a table. This document corrects that error.

DATES: Effective on January 14, 2020.

FOR FURTHER INFORMATION CONTACT: Mark Millican, FEMA, Individual Assistance Division, 500 C Street SW, Washington, DC 20472–3100, (phone) 202–212–3221 or (email) *FEMA-IA-Regulations@fema.dhs.gov.*

SUPPLEMENTARY INFORMATION: On March 21, 2019, the Federal Emergency Management Agency (FEMA) published a final rule (84 FR 10632) revising 44 CFR part 206 to comply with section 1109 of the Sandy Recovery Improvement Act of 2013 (Pub. L. 113–2). As part of the revisions, FEMA adopted a fiscal capacity analysis that uses the total taxable resources of a State instead of the population numbers and size categories in the table at the end of 44 CFR 206.48(b). As FEMA discussed in the preamble to the final rule (84 FR 10632, at 10646), FEMA intended to remove the outdated table, but the amendatory instruction did not include this specific direction. This document corrects that error.

List of Subjects in 44 CFR Part 206

Administrative practice and procedure, Coastal zone, Community facilities, Disaster assistance, Fire prevention, Grant programs—housing and community development, Housing, Insurance, Intergovernmental relations, Loan programs—housing and community development, Natural resources, Penalties, and Reporting and recordkeeping requirements.

Accordingly, 44 CFR part 206 is corrected by making the following correcting amendment:

PART 206—FEDERAL DISASTER ASSISTANCE

■ 1. The authority citation for part 206 continues to read as follows:

Authority: Robert T. Stafford Disaster Relief and Emergency Assistance Act, 42 U.S.C. 5121 through 5207; Homeland Security Act of 2002, 6 U.S.C. 101 *et seq.;* Department of Homeland Security Delegation 9001.1.

§ 206.48 [AMENDED]

■ 2. In § 206.48, remove the table at the end of paragraph (b).

Pete Gaynor,

Acting Administrator, Federal Emergency Management Agency.

[FR Doc. 2020–00105 Filed 1–13–20; 8:45 am]

BILLING CODE 9111–23–P

DEPARTMENT OF COMMERCE

National Oceanic and Atmospheric Administration

50 CFR Part 300

[RTID 0648–XW014]

Fraser River Sockeye and Pink Salmon Fisheries; Inseason Orders

AGENCY: National Marine Fisheries Service (NMFS), National Oceanic and Atmospheric Administration (NOAA), Commerce.

ACTION: Temporary rule; inseason orders.

SUMMARY: NMFS publishes Fraser River salmon inseason orders to regulate treaty and non-treaty (all citizen) commercial salmon fisheries in U.S. waters. The orders were issued by the Fraser River Panel (Panel) of the Pacific Salmon Commission (Commission) and subsequently approved and issued by NMFS during 2019 for sockeye and pink salmon fisheries within the U.S. Fraser River Panel Area. These orders established fishing dates, times, and areas for the gear types of U.S. treaty Indian and all citizen commercial fisheries during the period the Panel exercised jurisdiction over these fisheries.

DATES: The effective dates for the inseason orders are set out in this document under the heading Inseason Orders.

FOR FURTHER INFORMATION CONTACT: Peggy Mundy at 206–526–4323.

SUPPLEMENTARY INFORMATION: The Treaty between the Government of the United States of America and the Government of Canada concerning Pacific salmon was signed at Ottawa on January 28, 1985, and subsequently was given effect in the United States by the Pacific Salmon Treaty Act (Act) at 16 U.S.C. 3631–3644.

Under authority of the Act, Federal regulations at 50 CFR part 300, subpart F, provide a framework for the implementation of certain regulations of the Commission and inseason orders of the Commission's Fraser River Panel for U.S. sockeye and pink salmon fisheries in the Fraser River Panel Area.

The regulations close the U.S. portion of the Fraser River Panel Area to U.S. sockeye and pink salmon tribal and non-tribal commercial fishing unless opened by Panel regulations that are given effect by inseason orders issued by NMFS (50 CFR 300.94(a)(1)). During the fishing season, NMFS may issue inseason orders that establish fishing times and areas consistent with the Commission agreements and regulations of the Panel. Such orders must be consistent with domestic legal obligations and are issued by the Regional Administrator, West Coast Region, NMFS. Official notification of these inseason actions is provided by two telephone hotline numbers described at 50 CFR 300.97(b)(1) and in 84 FR 19729 (May 6, 2019). The inseason orders are published in the **Federal Register** as soon as practicable after they are issued. Due to the frequency with which inseason orders are issued, publication of individual orders is impractical.

Inseason Orders

The Panel assumed regulatory control of Fraser River Panel Area waters on June 30, 2019. The following inseason orders were adopted by the Panel and issued for U.S. fisheries within Fraser Panel Area waters by NMFS during the 2019 fishing season. Each of the following inseason actions was effective upon announcement on telephone hotline numbers as specified at 50 CFR 300.97(b)(1) and in 84 FR 19729 (May 6, 2019); those dates and times are listed herein. The times listed are local times, and the areas designated are Puget Sound Management and Catch Reporting Areas as defined in the Washington State Administrative Code at Chapter 220–22, with the exception of the Apex, which is those waters north and west of the Area 7A ''East Point Line,'' defined as a line projected from the low water range marker in Boundary Bay on the International Boundary through the east tip of Point Roberts in the State of Washington to the East Point Light on Saturna Island in the Province of British Columbia.

Fraser River Panel Order Number 2019–01: Issued 1:25 p.m., August 20, 2019

Treaty Indian Fishery

Areas 4B, 5, and 6C: Open for drift gillnet fishing from 12 p.m. (noon), Wednesday, August 21, 2019, through 12 p.m. (noon), Friday, August 23, 2019. All efforts must be made to release sockeye alive.

Areas 6, 7, and 7A: Open for reef net, drift gillnet, and purse seine fishing from 5 a.m., Wednesday, August 21, 2019, through 9 a.m., Friday, August 23, 2019. All efforts must be made to release sockeye alive.

All Citizen Fishery

Areas 7 and 7A: Open for purse seine fishing, with non-retention of sockeye, from 5 a.m. to 9 p.m., Friday, August 23, 2019.

Areas 7 and 7A: Open for drift gillnet fishing, with non-retention of sockeye, from 8 a.m. to 11:59 p.m. (midnight), Friday, August 23, 2019.

Fraser River Panel Order Number 2019–02: Issued 1:23 p.m., August 23, 2019

All Citizen Fishery

Areas 7 and 7A: The purse seine fishery previously scheduled for 5 a.m. to 9 p.m., Friday, August 23, 2019, is rescinded.

Areas 7 and 7A: The drift gillnet fishery previously scheduled for 8 a.m. to 11:59 p.m., Friday, August 23, 2019, is rescinded.

Fraser River Panel Order Number 2019–03: Issued 1:23 p.m., August 23, 2019

Treaty Indian Fishery

Areas 4B, 5, and 6C: Open for drift gillnet fishing from 12 p.m. (noon), Saturday, August 24, 2019, through 12 p.m. (noon), Wednesday, August 28, 2019. Sockeye non-retention.

Area 7: Open for reef net fishing from 5 a.m. to 9 p.m., Sunday, August 25, 2019, and 5 a.m. to 9 p.m., Monday, August 26, 2019. Sockeye non-retention.

All Citizen Fishery

Areas 7: Open for reef net fishing from 5 a.m. to 9 p.m., Sunday, August 25, 2019, and from 5 a.m. to 9 p.m., Monday, August 26, 2019. Must release all sockeye, unmarked Chinook salmon, unmarked coho, and all chum salmon.

Areas 7 and 7A, excluding the Apex: Open for purse seine fishing from 5 a.m. to 9 p.m., Saturday, August 24, 2019, and from 5 a.m. to 9 p.m., Sunday, August 25, 2019. Pink salmon retention only.

Areas 7 and 7A, excluding the Apex: Open for drift gillnet fishing from 8 a.m. to 11:59 p.m. (midnight), Saturday, August 24, 2019, and Sunday, August 25, 2019. Non-retention of sockeye.

Fraser River Panel Order Number 2019–04: Issued 4:20 p.m., September 12, 2019

Treaty Indian Fisheries

Area 7: Open for reef net fishing from 5 a.m. through 9 p.m., Friday, September 13, 2019, and from 5 a.m. through 1 p.m., Saturday, September 14, 2019. Sockeye non-retention.

Areas 4B, 5, 6, 6C, 7, and 7A: Open for reef net, drift gillnet, and purse seine fishing from 5 a.m., Sunday, September 15, 2019, through 9 p.m., Monday, September 16, 2019. Sockeye non-retention.

All Citizen Fishery

Area 7: Open for reef net fishing from 5 a.m. through 9 p.m., Friday, September 13, 2019, and from 5 a.m. through 1 p.m., Saturday, September 14, 2019. Must release all sockeye, unmarked Chinook salmon, unmarked coho, and all chum salmon.

Area 7: Open for purse seine fishing from 5 a.m. through 9 p.m., Friday, September 13, 2019. Pink salmon retention only.

Area 7: Open for drift gillnet fishing from 8 a.m. through 11:59 p.m. (midnight), Friday, September 13, 2019. Non-retention of sockeye.

Area 7A: Open for purse seine fishing from 5 a.m. through 9 p.m., Friday, September 13, 2019, and from 5 a.m. through 1 p.m., Saturday, September 14, 2019. Pink salmon retention only.

Area 7A: Open for drift gillnet fishing from 8 a.m. through 11:59 p.m. (midnight), Friday, September 13, 2019, and from 8 a.m. through 4 p.m., Saturday, September 14, 2019. Non-retention of sockeye.

Fraser River Panel Order Number 2019–05: Issued 12:30 p.m., September 13, 2019

This order implements changes to fisheries authorized by Fraser River Panel Order Number 2019–04, above.

Treaty Indian Fisheries

Area 7: Open for reef net fishing from 12 p.m. (noon) to 8 p.m., Saturday, September 14, 2019. Sockeye non-retention. This supersedes the reef net fishery previously scheduled in this area for Saturday, September 14, 2019.

Areas 4B, 5, and 6C: Open for drift gillnet fishing from 5 a.m., Sunday, September 15, 2019, through 9 p.m., Monday, September 16, 2019. Sockeye non-retention. This supersedes the net fisheries previously scheduled in these areas for Sunday, September 15, 2019, and Monday, September 16, 2019.

Areas 6, 7, and 7A: Open for drift gillnet and purse seine fishing from 5 a.m., Sunday, September 15, 2019, through 9 p.m., Monday, September 16, 2019. Sockeye non-retention. This supersedes the fisheries previously scheduled for these areas on Sunday, September 15, 2019, and Monday, September 16, 2019.

All Citizen Fishery

Area 7: Open for reef net fishing from 12 p.m. (noon) to 8 p.m., Saturday, September 14, 2019. Must release all sockeye, unmarked Chinook salmon, unmarked coho, and all chum salmon. This supersedes the reef net fishery previously scheduled for this area on Saturday, September 14, 2019.

Fraser River Panel Order Number 2019–06: Issued 11:41 a.m., September 17, 2019

Treaty Indian and All Citizen Fisheries

Areas 4B, 5, 6, 6C, and 7: Relinquish regulatory control effective 11:59 p.m. (midnight), Tuesday, September 17, 2019.

Areas 7A, excluding the Apex: Relinquish regulatory control effective 11:59 p.m. (midnight), Saturday, September 21, 2019.

Apex: Relinquish regulatory control at 11:59 p.m., Saturday, October 5, 2019.

Classification

The Assistant Administrator for Fisheries NOAA (AA), finds that good cause exists for the inseason orders to be issued without affording the public prior notice and opportunity for comment under 5 U.S.C. 553(b)(B) as such prior notice and opportunity for comments is impracticable and contrary to the public interest. Prior notice and opportunity for public comment is impracticable because NMFS has insufficient time to allow for prior notice and opportunity for public comment between the time the stock abundance information is available to determine how much fishing can be allowed and the time the fishery must open and close in order to harvest the appropriate amount of fish while they are available.

The AA also finds good cause to waive the 30-day delay in the effective date, required under 5 U.S.C. 553(d)(3), of the inseason orders. A delay in the effective date of the inseason orders would not allow fishers appropriately controlled access to the available fish at that time they are available.

This action is authorized by 50 CFR 300.97, and is exempt from review under Executive Order 12866.

Authority: 16 U.S.C. 3636(b).

Dated: January 2, 2020.

Jennifer M. Wallace,

Acting Director, Office of Sustainable Fisheries, National Marine Fisheries Service.

[FR Doc. 2020–00021 Filed 1–13–20; 8:45 am]

BILLING CODE 3510–22–P

Proposed Rules

Federal Register
Vol. 85, No. 9
Tuesday, January 14, 2020

This section of the FEDERAL REGISTER contains notices to the public of the proposed issuance of rules and regulations. The purpose of these notices is to give interested persons an opportunity to participate in the rule making prior to the adoption of the final rules.

DEPARTMENT OF HOUSING AND URBAN DEVELOPMENT

24 CFR Parts 5, 91, 92, 570, 574, 576, 903, and 905

[Docket No. FR 6123–P–02]

RIN 2577–AA97

Affirmatively Furthering Fair Housing

AGENCY: Office of the Secretary, HUD.

ACTION: Proposed rule.

SUMMARY: HUD recognizes that its program participants have a duty to affirmatively further fair housing (AFFH), which HUD finds essential to the appropriate administration of its grant programs. Program participants must certify that they AFFH and maintain documentation to support that certification. This rule proposes changes to HUD's regulations regarding the reporting on program participants' actions to AFFH so that HUD can effectively evaluate participants' compliance with their AFFH obligations. This proposed rule would establish a uniform reporting process that respects the unique needs and difficulties faced by individual jurisdictions by assessing program participants on the concrete actions they take to AFFH and by leveraging objective metrics for fair housing choice to assist HUD's evaluation of such actions. The proposed regulation would revise the definition of AFFH, develop metrics to allow comparison of jurisdictions, and require jurisdictions to certify that they will AFFH by identifying concrete steps the jurisdiction will take over the next 5 years. Jurisdictions would need to report on their progress toward the commitments in their AFFH certification through the regular consolidated plan reporting and review processes. Public housing agencies would demonstrate their efforts to AFFH through their participation in the consolidated plan process.

DATES: *Comment Due Date:* March 16, 2020.

ADDRESSES: Interested persons are invited to submit comments regarding this proposed rule. Copies of all comments submitted are available for inspection and downloading at *www.regulations.gov.* To receive consideration as public comments, comments must be submitted through one of two methods, specified below. All submissions must refer to the above docket number and title.

1. *Electronic Submission of Comments.* Interested persons may submit comments electronically through the Federal eRulemaking Portal at *www.regulations.gov.* HUD strongly encourages commenters to submit comments electronically. Electronic submission of comments allows the commenter maximum time to prepare and submit a comment, ensures timely receipt by HUD, and enables HUD to make them immediately available to the public. Comments submitted electronically through the *www.regulations.gov* website can be viewed by other commenters and interested members of the public. Commenters should follow the instructions provided on that site to submit comments electronically.

2. *Submission of Comments by Mail.* Comments may be submitted by mail to the Regulations Division, Office of General Counsel, Department of Housing and Urban Development, 451 7th Street SW, Room 10276, Washington, DC 20410–0500.

FOR FURTHER INFORMATION CONTACT: David Enzel, Deputy Assistant Secretary for Enforcement Programs, Office of Fair Housing and Equal Opportunity, Department of Housing and Urban Development, 451 7th Street SW, Room 5204; telephone number 202–402–5557 (this is not a toll-free number). This number may be accessed via TTY by calling the toll-free Federal Relay Service during working hours at 1–800–877–8339.

SUPPLEMENTARY INFORMATION:

I. History

The Fair Housing Act prohibits discrimination in the provision of housing based on race, color, religion, sex, handicap, familial status, or national origin.[1] Section 808(e)(5) of the Fair Housing Act of 1968 (42 U.S.C. 3608(e)(5)) requires that the HUD Secretary ''administer the programs and activities relating to housing and urban development in a manner affirmatively to further the policies of [the Fair Housing Act].'' In addition, recipients of HUD funding are required by other statutes to certify they will AFFH:

- *Housing and Community Development Act.* Jurisdictions directly receiving Community Development Block Grants must certify that they will AFFH (§ 104(b)(2), 42 U.S.C. 5304(b)(2)). Local governments receiving grants from a state must also certify they will AFFH (§ 106(d)(7)(B), 42 U.S.C. 5306(d)(7)(B)).
- *Cranston-Gonzalez National Affordable Housing Act.* States and local governments receiving certain grants must certify they will AFFH as part of their 5-year comprehensive housing affordability strategy identifying needs for affordable and supportive housing for the following 5 years (§ 105(b)(15), 42 U.S.C. 12705(b)(15)).
- *United States Housing Act of 1937.* Public housing agencies must include a certification they will AFFH as part of their annual plan (§ 5A(d)(16), 42 U.S.C. 1437c–1(d)(16)).

Recipients of HUD funding, therefore, are required to affirmatively further the Fair Housing Act's goal of promoting fair housing and equal opportunity. The Fair Housing Act and subsequent acts requiring certifications do not specify how HUD, or recipients of funding, are to AFFH, granting the Secretary broad discretion to define the precise scope of the AFFH obligation for HUD's program participants, including the AFFH certification.[2] Further, in *Inclusive Communities,* the Supreme Court warned that the Fair Housing Act ''is not an instrument to force housing authorities to reorder their priorities'' [3] and is not meant to remedy mere

[1] *See* 42 U.S.C. 3604.

[2] *See, e.g., United States* v. *Winthrop Towers,* 628 F.2d 1028, 1036 (7th Cir. 1980) (''HUD has broad discretion 'to choose between alternative methods of achieving the national housing objectives set forth in the several applicable statutes.' '') (quoting *Shannon* v. *U.S. Dep't of Hous. & Urban Dev.,* 436 F.2d 809, 819 (3d Cir. 1970)); *see also Nat'l Fair Hous. Alliance,* 330 F. Supp. 3d at 62 (D.D.C. Aug. 2018) (''HUD has 'broad discretion to choose between alternative methods of achieving the national housing objectives set forth in the several applicable statutes,' . . . and the Court may not substitute its judgment for HUD's in determining the best way of doing so.'') (quoting *Shannon* 436 F.2d at 819).

[3] *Tex. Dep't of Hous. & Cmty. Affairs* v. *Inclusive Cmtys. Project, Inc.,* 135 S. Ct. 2507, 2522–23 (2015).

statistical imbalances in housing for protected class members.[4]

HUD satisfies its own AFFH obligations in various ways, including by imposing site and neighborhood standards for HUD-funded development,[5] requiring affirmative marketing of housing units to promote integrated neighborhoods,[6] and designing its programs to be consistent with its AFFH obligation. HUD also uses the disparate impact theory as a method of addressing violations of the Fair Housing Act where there is not clear evidence of intent to discriminate. HUD's grantee compliance monitoring advances the same goal—by requiring that grantees maintain records to support their AFFH certifications, HUD can use the information gathered to address violations of the Fair Housing Act that are not immediately apparent.

In 2015, HUD issued a final rule[7] revising the AFFH reporting regulations for program participants. That rule required program participants to use a computer assessment tool to complete an Assessment of Fair Housing (AFH) by answering 92 questions on fair housing issues, priorities, and goals. Topics included segregation, racially or ethnically concentrated areas of poverty, significant disparities in access to opportunities, and disproportionate housing needs. The rule contemplated separate assessment tools for public housing agencies (PHAs), States and Insular Areas, and local governments. HUD released a tool for local governments[8] but never released a tool for States and Insular Areas, and the tool for PHAs never became operational.

II. Justification for Change

While the statutory obligation to AFFH has not changed, HUD has, over time, required program participants to document their efforts and plans to AFFH in several different ways. Since the issuance of the 2015 final rule, HUD has determined that the current regulations are overly burdensome to both HUD and grantees and are ineffective in helping program participants meet their reporting obligations for multiple reasons. While some of the burdens are a result of the assessment tools themselves, the tools are closely tied to the regulatory language, which HUD believes is too prescriptive in outcomes for jurisdictions. Therefore, HUD believes it is necessary to revise the codified regulation, not just the assessment tools.

First, the AFH required significant resources from program participants, and its complexity and demands resulted in a high failure rate for jurisdictions to gain approval for their AFH in the first year of AFH submission. HUD became aware of significant deficiencies in the Local Government assessment tool that impeded completion and HUD acceptance of meaningful assessments by program participants. The number of questions, the open-ended nature of many questions, and the lack of prioritization between questions made the planning process both inflexible and difficult to complete.

On May 15, 2017, HUD issued a notice inviting public comments to assist HUD in identifying existing regulations that may be outdated, ineffective, or excessively burdensome.[9] Many commenters specifically indicated that, as program participants, they found the rule's requirements to be (or likely to be) extremely resource-intensive and complicated, placing a strain on limited budgets. A representative of PHAs wrote that compliance with the ''overly burdensome and impractical'' rule[10] would be expensive, with particular concern for PHAs with small housing portfolios, while other commenters stated that the rule did not provide enough consideration to the fact that jurisdictions are limited geographically in what they can do, even when a jurisdiction is in a regional partnership.

Of the 49 jurisdictions that were in the first group to submit an AFH between October 2016 and December 2017, 31 (63 percent) were either never accepted or were only accepted after HUD required revisions.[11] While regional AFHs allowed program participants to pool knowledge and resources, the joint AFHs had the same defects as individual AFHs.[12] Program participants attempted to prepare successful AFHs by hiring outside consultants, redirecting resources that could have been used to support affordable housing directly.[13]

The sheer volume of data and variety of expertise required under the 2015 rule placed an undue burden on jurisdictions. While the assessment tool for PHAs was not finally implemented, under a published draft, PHAs would have been responsible for reporting on factors such as segregation levels and patterns dating back to 1990, community attitudes leading to observed patterns, and the presence or lack of private or public investment for the jurisdiction's protected classes.[14] The tool would also require PHAs to analyze and consider data and policies beyond their jurisdictional control and typical subject-matter expertise. For example, the rule required identifying disparities in ''. . . access to public transportation, quality schools and jobs . . . [and] environmental health hazards'' and ''programs, policies, or funding mechanisms that affect disparities'' to such access.[15] A commenter on the advance notice of proposed rulemaking on AFFH regulations issued in 2018 noted that this jurisdictional analysis was simply too complex to be effectively completed by staff without specific statistical and mapping knowledge, as housing providers generally have staff with skills that lie in providing affordable housing services, but not in providing complex statistical data analysis.[16] The same is likely true for many smaller jurisdictions.

The 2015 rule also had public participation requirements that were similar to the consolidated plan citizen participation requirements, but it created a separate process for the AFH that duplicated the existing requirements for citizen participation and consultation with outside organizations that were already required for the consolidated plan. Jurisdictions were required to hold at least one public

[4] *See, e.g., id.* at 2522 (''But disparate-impact liability has always been properly limited in key respects that avoid the serious constitutional questions that might arise under the [Fair Housing Act], FHA, for instance, if such liability were imposed based solely on a showing of a statistical disparity.'')

[5] See, *e.g.,* 24 CFR 891.125; 983.57.

[6] 24 CFR part 200, subpart M.

[7] ''Affirmatively Furthering Fair Housing; Final Rule,'' published July 16, 2015, at 80 FR 42272.

[8] ''Affirmatively Furthering Fair Housing: Announcement of Renewal of Approval of the Assessment Tool for Local Governments,'' published January 13, 2017, at 82 FR 4391; ''Affirmatively Furthering Fair Housing Assessment Tool: Announcement of Final Approved Document,'' published December 31, 2015, at 80 FR 81840.

[9] ''Reducing Regulatory Burden; Enforcing the Regulatory Reform Agenda Under Executive Order 13777,'' published June 14, 2017, at 82 FR 22344.

[10] *See* Lisa Stevens, Idaho Chapter of NAHRO letter to HUD Notice FR–6030–N–01 Reducing Regulatory Burden; Enforcing the Regulatory Reform Agenda Under Executive Order 13777, June 14, 2017, available at *https://www.regulations.gov/document?D=HUD-2017-0029-0109.*

[11] ''Affirmatively Furthering Fair Housing: Withdrawal of the Assessment Tool for Local Governments,'' published May 23, 2018, at 83 FR 23922.

[12] *Id.*

[13] *Id.*

[14] PHA Assessment of Fair Housing Tool (*https://www.hudexchange.info/resources/documents/Assessment-of-Fair-Housing-Tool-For-Public-Housing-Agencies-2017-01.pdf*).

[15] AFFH Rule, 80 FR at 42282.

[16] Jim Hobbs, Housing Authority of Pikeville comment letter to FR–6123–A–01 Affirmatively Furthering Fair Housing: Streamlining and Enhancements, p. 1, October 12, 2018, *available at https://www.regulations.gov/document?D=HUD-2018-0060-0150.*

hearing specifically on their proposed AFFH strategies prior to publishing the AFH for comment. According to some commenters, these AFFH-specific hearings created high additional costs for jurisdictions.[17]

Second, the administration of the rule was burdensome to HUD. While implementing the 2015 rule, HUD spent over $3.5 million to provide technical assistance to the initial 49 jurisdictions. A workforce management plan, written by a contractor prior to the initial AFH submissions, estimated that HUD would need 538 full-time employees to conduct reviews of the AFHs submitted in 2019, given the increased number of jurisdictions originally scheduled to submit AFHs in 2019 (up to 682).[18]

Third, the 2015 rule's scope was particularly burdensome because HUD did not tailor the rule depending on the program participant, other than through creating broad categories. Every jurisdiction, regardless of their size, civil rights record, or current housing conditions, had to go through the same AFH process, without the flexibility to identify their locality's most relevant issues or to adapt their process to the unique conditions of the jurisdiction. Commenters expressed concerns that they lacked the capacity to analyze the several contributing factors prescribed by HUD and requested that HUD allow grantees flexibility in identifying issues and developing a course of action.[19]

Fourth, HUD determined that the 2015 rule focused too much on planning and process, and not enough on either the jurisdiction or HUD evaluating fair housing results. Jurisdictions were required to consider and provide extensive documentation for every question, regardless of whether the question or the expected answer advanced the jurisdiction's duty to AFFH or was relevant to the needs of the jurisdiction. This uniform, process-based approach discouraged innovation, allowed the process to substitute for actual results, and made it difficult to evaluate and compare jurisdictions over time. Jurisdictions can advance fair housing in ways that HUD officials cannot predict because HUD lacks the extensive localized knowledge of State or local officials. The inherent nature of fitting jurisdictions into pre-determined categories and methods rather than evaluating jurisdictions based on results and achievements could discourage innovation and inhibit HUD's ability to evaluate a jurisdiction's improvement.

Finally, the completion of the AFH required grantees to use specific data sets and HUD-provided tools, including extensive mapping data, locally available data, and data from various interest groups. The goal behind the assessment tools was to assist in compiling this information, but the scope of the task of providing quality tools proved difficult for HUD, given the wide variety of circumstances to which they applied from jurisdiction to jurisdiction, and the absence of a discrete statutory objective. For local jurisdictions, the tool was difficult to learn and operate and did not include all factors that jurisdictions deemed relevant, such as low-income housing tax credit supported projects. For PHAs and states, no tools were ever provided because of the challenge in developing appropriate data sets for both relatively large and small geographies, *i.e.,* states and particular housing developments.

While the 2015 rule was not fully implemented, HUD determined that the results from the limited roll-out (summarized above) were sufficient to cease further implementation. HUD therefore concluded that a new approach was required.[20] On August 16, 2018, HUD published an Advance Notice of Proposed Rulemaking at 83 FR 40713, asking for the public's input on changes that would: (1) Minimize regulatory burden while more effectively aiding program participants to meet their legal obligations; (2) create a process that is focused primarily on accomplishing positive results, rather than on performing analysis of community characteristics; (3) provide for greater local control and innovation; (4) seek to encourage actions that increase fair housing choice, including through greater housing supply; and (5) more efficiently utilize HUD resources.

HUD received over 700 public comments in response. Many expressed support for the 2015 final rule and urged HUD to continue to implement its requirements. These commenters cited the need for a way to enforce the AFFH requirement and cited the significant use of resources and public input that went into the creation of the 2015 rule. These commenters found the early results of the rule ''promising'' and believed that improving the tools would ease the burdens and improve the process.

However, a large number of commenters opposed the 2015 rule. Some objected to the idea entirely, citing concerns for local control of zoning. Others felt that the requirements of the rule were too onerous, specifically the level of public participation needed and the scope of data that program participants were required to address. Commenters asked that program participants and PHAs be given broader discretion in their planning. Multiple commenters suggested that instead of the 2015 rule's approach, HUD should find ways to use the AFFH process to provide incentives to increase housing supply and remove restrictive zoning regulations.

HUD has considered these comments and suggestions in the development of this proposed rule.

III. Goals of Proposed Rule

HUD seeks to further both the spirit and the letter of the Fair Housing Act. Housing discrimination still takes place, and many jurisdictions continue to allow known barriers to fair housing—such as burdensome governmental processes, the concentration of substandard housing stock in specific areas, or restrictions based on the source of a tenant's income—to exist.

HUD intends this regulation to promote and provide incentives for innovations in the areas of affordable housing supply, access to housing, and improved housing conditions. This is part of HUD's ongoing effort to improve regulations to allow and encourage innovative solutions to the housing problems facing America today. For example, there have been significant improvements in housing design and production products, as demonstrated in new designs for manufactured housing and reduced-size housing. Jurisdictions have also chosen to adopt changes in zoning laws that promote housing for the local workforce. Jurisdictions have amended historic preservation laws to permit redesign of buildings that are ill-suited for its community members with disabilities. Jurisdictions are promoting the provision of housing adjacent to transportation centers. As jurisdictions examine and discuss obstacles to fair housing, HUD anticipates such obstacles

[17] *See, e.g.,* Tiffany King, The Michigan State Housing Development Authority (MSHDA), comment letter to FR–6123–A–01 Affirmatively Furthering Fair Housing: Streamlining and Enhancements, p. 1, October 16, 2018, *available at https://www.regulations.gov/document?D=HUD-2018-0060-0369*; Jennifer Eby comment letter to HUD Notice FR–6030–N–01 Reducing Regulatory Burden; Enforcing the Regulatory Reform Agenda Under Executive Order 13777, p. 2, June 14, 2017, *available at https://www.regulations.gov/document?D=HUD-2017-0029-0222.*

[18] AFFH Workforce Management Plan, April 29, 2016.

[19] *See, e.g.,* The City of Winston-Salem, NC comment letter to FR–6123–A–01 Affirmatively Furthering Fair Housing: Streamlining and Enhancements, p. 2, October 16, 2018, *available at https://www.regulations.gov/document?D=HUD-2018-0060-0357.*

[20] Additional information was included in the Advance Notice of Proposed Rulemaking, ''Affirmatively Furthering Fair Housing: Streamlining and Enhancements,'' published October 15, 2018, at 83 FR 40713.

can, in part, be addressed through innovative approaches to design and building codes and the elimination of unnecessary fees and other regulatory barriers. HUD will spotlight jurisdictions achieving such new solutions, but will not mandate or prescribe specific actions.

Therefore, HUD is proposing a new process to evaluate each jurisdiction's efforts to AFFH that not only allows HUD to enforce civil rights requirements effectively but also empowers individual jurisdictions to develop new approaches to AFFH and share with their peer jurisdictions what has worked and what has not. This approach will allow HUD to target its resources where they are most needed while enabling jurisdictions to measure their progress, understand their successes or failures, and continue to improve their efforts, without a mandate from HUD on exactly what steps to take. This approach would allow HUD to highlight best practices and create a repository of ideas by drawing out the diffuse knowledge about fair housing held by local actors and encouraging policy experimentation. HUD hopes to leverage this knowledge by studying the best housing opportunity results across the country and encouraging jurisdictions to adopt best practices.

This approach allows and provides incentives to local actors who know best the fair housing needs of their communities to take steps to further their particularized goals. As the Supreme Court stated in *Inclusive Communities,* while discussing the purpose of the Fair Housing Act, HUD should not ''second-guess which of two reasonable approaches'' should be taken or ''force housing authorities to reorder their priorities'' unnecessarily.[21] The Fair Housing Act ''does not decree a particular vision of urban development.'' [22] HUD aims to take this into account and allow for the flexibility and innovation necessary to best further fair housing nationwide, recognizing that fair housing is an especially difficult and complex policy area because of the competing considerations that go into promoting fair housing and other valid governmental priorities.

By proposing to reward jurisdictions that are performing well in their AFFH efforts and improving in ways that will benefit entire communities, HUD will provide incentives to both jurisdictions and the general public to find ways to help local jurisdictions improve their AFFH efforts. By increasing the number of people who benefit from an expansion of fair and affordable housing, HUD expects that a larger share of the local community will be motivated to participate in local discussions on how to AFFH and what strategies are best suited for the locality. Such incentives may encourage citizens and local businesses to participate in important local housing debates when they otherwise may have sat on the sidelines. HUD believes that having buy-in from a broad range of citizens and businesses in a community will result in a stronger AFFH effort and help reduce housing discrimination.

HUD also recognizes that government policies, even when well-intentioned, can have negative results. This proposed policy of encouraging local experimentation is a recognition of the difficulties of crafting a top-down approach. HUD does not expect this proposed rule to be the final word on how recipients of HUD funding can AFFH. Rather, HUD anticipates that this will be the beginning of a flexible approach, consistent with constitutional mandates and statutory requirements, as HUD and jurisdictions gain additional evidence about what works and does not work to facilitate the advancement of fair housing.

IV. Summary of Proposed Rule

HUD believes that fair housing choice exists when a jurisdiction can foster the broad availability of affordable housing that is decent, safe, and sanitary and does so without housing discrimination. To that end, HUD is proposing to evaluate how program participants are carrying out their AFFH obligation as a threshold matter by using a series of data-based measures to determine whether a jurisdiction (1) is free of adjudicated fair housing claims; (2) has an adequate supply of affordable housing throughout the jurisdiction; and (3) has an adequate supply of quality affordable housing. Jurisdictions that score highly using these metrics (or through improvements over a 5-year cycle) would be eligible for various incentives in HUD programs. HUD would focus remedial resources and potential regulatory enforcement actions on the lowest performers.

All program participants included in the consolidated plan process would be required to examine their own circumstances to determine how best to address their AFFH performance. HUD is proposing to modify the regulatory requirements of jurisdictions' certifications that they will AFFH by requiring the jurisdictions to commit, in the certification, to taking specific steps to address obstacles to fair housing choice. As a result of HUD's proposal to include these commitments as part of the consolidated plan, jurisdictions would consult with all relevant stakeholders to develop AFFH commitments tailored to the needs and situations of the jurisdiction. HUD expects that jurisdictions would then be able to share with others, through HUD and otherwise, what worked and what did not work, allowing jurisdictions to learn from one another as they develop new approaches. PHAs would be required to participate in the development of this certification through their participation in the consolidated plan process; this participation and their own accompanying AFFH certification would be how PHAs fulfill their AFFH responsibilities.

The previous AFFH process—which required lengthy submissions that averaged 204 pages but stretched as long as 832 pages [23]—risked violating the organizational management maxim that if everything is a priority, nothing is a priority. In contrast, HUD believes that simplifying AFFH requirements would aid program participants in meeting their statutory civil rights obligations. It would also help HUD target its enforcement and technical assistance for jurisdictions receiving CDBG funds so that HUD's efforts are directed where they are needed most. This would allow jurisdictions to focus on their most important fair housing goals so that the jurisdiction could achieve more of their aims, instead of trying to execute too many goals to be successful. By having jurisdictions focus on fewer elements, it would be easier for the public to provide relevant information and feedback, better enabling jurisdictions to take those contributions from the public into consideration.

HUD welcomes comments on all aspects of the proposed rule and its potential impacts. However, there are areas where HUD is seeking very specific feedback on the proposal. These specific requests for comments are embedded in the preamble discussion.

A. Definition of Affirmatively Furthering Fair Housing

The current regulation defines AFFH as ''taking meaningful actions that, taken together, address significant disparities in housing needs and in access to opportunity, replacing segregated living patterns with truly integrated and balanced living patterns, transforming racially and ethnically

[21] *Inclusive Communities,* 135 S. Ct. at 2522.

[22] *Id.* at 2523.

[23] *See* December 23, 2016, AFH of the City of Philadelphia and the Philadelphia Housing Authority, *available at http://ohcdphila.org/wp-content/uploads/2017/01/afh-2016-for-web.pdf.*

concentrated areas of poverty into areas of opportunity, and fostering and maintaining compliance with civil rights and fair housing laws.'' [24]

HUD proposes changing the definition of AFFH to ''advancing fair housing choice within the program participant's control or influence.'' HUD is proposing a definition of ''fair housing choice'' to be allowing ''individuals and families [to] have the opportunity and options to live where they choose, within their means, without unlawful discrimination related to race, color, religion, sex, familial status, national origin, or disability.'' [25] Fair housing choice would consist of three components:

(1) Protected choice, meaning the absence of discrimination.

(2) Actual choice, meaning not only that affordable housing options exist (as defined by the jurisdiction based on the needs and resources of that jurisdiction), but that the information and resources are available to enable informed choices. This is intended to encourage jurisdictions to provide public education about fair housing, the protected classes, and the resources available to protected class members to protect their right to fair housing.

(3) Quality choice, meaning that the available and affordable housing is decent, safe, and sanitary, and, for persons with disabilities, accessible as required under civil rights laws.

This revised definition of AFFH would avoid a federal government directive for local action that does not align with the statutory directive or that goes go beyond the authority of subject jurisdictions. It would also alleviate the unintended consequences of discouraging the use of federal assistance in communities that need additional help instead of restrictions. It would provide a more tailored approach that would take into account local issues and concerns by allowing local jurisdictions to create custom approaches based on their unique circumstances.

In addition, the revised definition would make it clear that fair housing is based on fair housing choice. Fair housing involves combatting discrimination across all the classes protected by the Fair Housing Act: color, religion, sex, disability, familial status, and national origin. Finally, the revised AFFH definition would emphasize that a jurisdiction can AFFH in a variety of ways, according to the needs and means of the local community.

The revised definition does not affect the responsibility of jurisdictions to comply with other relevant federal requirements and civil rights law.

B. AFFH Certifications

Each jurisdiction that submits a consolidated plan must submit a certification that it will AFFH. Currently, the certification consists of a statement that the jurisdiction will AFFH, but it does not specify the exact way the jurisdiction intends to AFFH. HUD is proposing to expand the certification so that the jurisdiction would commit to addressing at least three fair housing choice obstacles or goals over the next five years. By including AFFH planning as part of the consolidated plan process, HUD proposes to incorporate the public participation requirements of the consolidated plan, without imposing an additional burden on jurisdictions. PHAs, already required to participate in the consolidated plan process, would be required to certify, in every applicable annual plan, that they have consulted with the jurisdiction on how to satisfy their obligations to AFFH. This participation and certification would fulfill their AFFH responsibilities.

Each jurisdiction would be required to submit at least three measurable, concrete goals it plans on reaching in the upcoming years or obstacles to fair housing choice it plans to address, within its scope of influence, to increase fair housing choice. HUD would expect these submissions to provide a brief and direct explanation of how pursuing each goal or alleviating each obstacle would further fair housing choice in their jurisdiction. HUD would review these goals or obstacles for completeness and verify they use concrete and measurable standards, but HUD would not require that the goals cover specific areas or reach certain thresholds. Jurisdictions may consider additional data other than what was used for the comparison metrics in deciding what steps to take, but they would be required to provide a narrative justification for the decisions and goals. The certification would not have to address all fair housing obstacles or identify every effort the jurisdiction would take, but it should identify crucial or material efforts that the jurisdiction would reasonably expect to undertake over the next five years.

Question for Comment 1: Is three the appropriate number of goals a jurisdiction should submit? If not, what would be a more suitable number? Would a higher number more appropriately hold jurisdictions accountable to AFFH without imposing an undue burden?

Question for Comment 2: How should HUD balance requiring overly prescriptive standards with ensuring integrity for data sources that support such goals?

The certification would be informed by the nature of the program participant, its geographic scope, its size, and its financial, technical and managerial resources. The goals or obstacles identified in the certification would not need to be based on any HUD-prescribed mode of analysis, such as examining a statistical analysis of housing patterns, using any specified data set, or reflecting original research or commissioned expert opinions, but they should reflect the practical experience and local insights of the program participant in conducting its ordinary housing-related operations, both with HUD funding and other programmatic efforts.

HUD recognizes that jurisdictions may find many ways to advance fair housing that HUD officials cannot predict. Developing approaches to AFFH is a particularly difficult policy area, because a jurisdiction must consider competing factors within the jurisdiction that affect how best to AFFH, and State or local officials have the localized knowledge to balance those considerations. Therefore, HUD is not proposing to require that jurisdictions carry out specific steps to AFFH. This approach would allow jurisdictions to act as they deem necessary to achieve their results while allowing HUD to avoid micromanaging localities, ''decree[ing] a particular vision of urban development,'' [26] or ''second-guess[ing] which of two reasonable approaches'' a jurisdiction should take.[27] It would preserve flexibility for jurisdictions to take action based on the needs, interests, and means of the local community, and respects the proper role and expertise of state and local authorities.

Question for Comment 3: What, if any, aspects of the proposed rule and other policies not in the proposed rule, would motivate jurisdictions to more meaningfully engage in the AFFH planning process and make progress on the goals of the local AFFH plan?

[24] 24 CFR 5.152.

[25] The Fair Housing Act uses the term ''handicap.'' *See* 42 U.S.C. 3604. However, the term ''disability'' is more commonly used and accepted today to refer to a physical or mental impairment that is protected under federal civil rights laws, the record of that impairment, or being perceived as having an impairment. Therefore, except when quoting from the Fair Housing Act, this preamble and proposed rule use the term ''disability.''

[26] *Inclusive Communities,* 135 S. Ct. at 2522–23.

[27] *Id.* at 2512.

However, HUD anticipates that jurisdictions may look to common ways to increase fair housing choice in their jurisdictions. HUD proposes including a non-exhaustive list in the regulation of conditions that HUD considers to be common barriers to fair housing choice. HUD would consider a goal to take concrete steps toward alleviating or improving one of these listed conditions as a justified method of affirmatively furthering fair housing, and therefore jurisdictions would not need to include an explanation of why the jurisdiction is pursuing solutions to these barriers. While the proposed list would serve as a resource for jurisdictions in identifying potential obstacles or goals, HUD is not requiring jurisdictions to choose from these barriers when developing their certifications. HUD seeks input on what specific barriers may be categorized as ''common'' and thus should be included in the list.

HUD recognizes the broad sweep of the AFFH obligation, its nature which defies easy quantification, and its susceptibility to widely diverging but reasonable interpretations. In analyzing the statutory direction within the context of the Fair Housing Act and other applicable laws as a whole, HUD does not expect that program participants would be able to immediately and completely address each impediment which they identify. Further, the purpose of these goals would not be to bind the jurisdiction to a certain course of action. Rather, these goals would be intended to provide HUD with an explanation of how the jurisdictions plans to AFFH so that HUD can review the jurisdiction's actions to determine whether, in HUD's assessment, the jurisdiction is making a sufficient effort to AFFH.

Although not expressly included on HUD's proposed examples of common barriers (because they are generally legitimate and widely vary), jurisdictions should feel free to examine their State or local zoning laws and may determine that modifying these provisions is how they can best AFFH. HUD anticipates that program participants may undertake these types of actions because commenters stated that, outside of market forces, there are a number of structural barriers that could reduce the availability of housing overall, keeping housing prices high. For instance, cities may have zoning laws that restrict the ability of owners to build higher-density housing, or they may have elaborate housing production processes that result in would-be developers not getting the best use out of their land. One commenter noted that parties who would like to build more housing might face multiple layers of bureaucracy, each with their own interests and levels of expertise, such as city planning departments, citizen zoning boards, historical commissions, public hearings, state environmental review boards, and city rental licensing departments.[28]

HUD considers changes to zoning laws to be a useful and appropriate tool to further fair housing choice. Jurisdictions are free to choose to undertake changes to zoning or land-use policies as one method of complying with the AFFH obligation; however, no jurisdiction may have their certification questioned because they do not choose to undertake zoning changes. HUD believes this is consistent with section 105(c)(1) of the Cranston-Gonzalez National Affordable Housing Act,[29] which prohibits HUD from disapproving consolidated plans because a jurisdiction adopts or continues zoning ordinances or land-use policies.

One commenter cited data that found that the ''overall cost of housing in the United States is at least $3.4 trillion higher than it would be absent zoning regulations'' and US GDP is about $2 trillion below its potential due to restrictive land-use regulations.[30] According to one study cited by a commenter, ''regulation imposed by all levels of government (whether local, state or federal) accounts for 32.1 percent of the cost of an average multifamily development.'' [31] Numerous research studies provide supporting evidence of the commenters' statements concerning the adverse impacts of restrictions on affordability and availability. A HUD report (2005) describes evidence from multiple studies indicating that regulating development increases the cost of housing. The estimated impact on prices varies by type of regulation studied and the context of the real estate market, and ranges from 10 to 50 percent.[32] A more extensive and critical review of published research (Quigley and Rosenthal, 2005) finds that ''a number of credible papers seem to bear out theoretical expectations'' that reducing the supply of developable land will raise housing prices.[33] Sophisticated empirical research in the last decade has produced more convincing evidence that there is a direct link between regulation and housing affordability (Gyourko and Molloy, 2015).[34] The impact of constraining development reaches beyond local housing and land markets. There is a macroeconomic cost of limiting housing production in the most productive cities. One study (Hsieh and Moretti, 2019) found that the misallocation of labor due to restrictive housing regulations lowered US economic growth by 36 percent from 1964 to 2009.[35] Jurisdictions may examine their State or local laws, regulations, and government structure and determine that modifying these structural barriers to affordable housing is how they can best AFFH.

Jurisdictions with high levels of deteriorated or low-quality housing may decide that they wish to focus on improving those measures. The jurisdiction could work to convince the local PHA to prioritize the rehabilitation of its units, or it could decide that the best way to spend flexible funds is to improve local housing conditions.

Question for Comment 4: Are there other factors, in addition to the ones listed in this proposed regulation, which are generally considered to be inherent barriers to fair housing?

Question for Comment 5: Should any of the factors listed as inherent barriers to fair housing be revised or removed? Should there be different inherent barriers for States than for other jurisdictions?

Question for Comment 6: What process should HUD undertake for updating the list in regulations, and how frequently should these updates occur?

[28] Salim Furth, Mercatus Center at George Mason University letter to ANPR FR–6123–A–01 Affirmatively Furthering Fair Housing: Streamlining and Enhancements, October 16, 2018, p. 4, *available at https://www.regulations.gov/document?D=HUD-2018-0060-0026.*

[29] 42 U.S.C. 12705(c)(1).

[30] *See* Joshua Gottlieb comment letter to to FR–6123–A–01 Affirmatively Furthering Fair Housing: Streamlining and Enhancements, October 16, 2018, available at *https://www.regulations.gov/document?D=HUD-2018-0060-0655.*

[31] National Association of Home Builders comment letter to ANPR FR–6123–A–01 Affirmatively Furthering Fair Housing: Streamlining and Enhancements, October 16, 2018, *available at https://www.regulations.gov/document?D=HUD-2018-0060-0489,* citing Emrath, P. & Walter, C. Multifamily Cost of Regulation (2018), *available at https://www.nahbclassic.org/fileUpload_details.aspx?contentTypeID=3&contentID=262391&subContentID=712894.*

[32] U.S. Department of Housing and Urban Development, 2005 ''Why Not In Our Community?, Removing Barriers to Affordable Housing, An Update to the Report of the Advisory Commission on Regulatory Barriers to Affordable Housing.''

[33] Quigley, John M., and Larry A. Rosenthal. 2005. ''The Effects of Land Use Regulation on the Price of Housing: What Do We Know? What Can We Learn?'' Cityscape: A Journal of Policy Development and Research 8 (1): 69–137.

[34] Gyourko, J. and Molloy, R., 2015. Regulation and housing supply. In *Handbook of regional and urban economics* (Vol. 5, pp. 1289–1337). Elsevier.

[35] Hsieh, Chang-Tai, and Enrico Moretti, 2019. ''Housing Constraints and Spatial Misallocation.''*American Economic Journal: Macroeconomics* 11 (2): 1–39.

Finally, under the proposed rule, documentation used in the preparation of the AFFH certification would not need to be provided to HUD. However, such information would have to be retained and available for inspection by HUD according to the record retention requirements of the consolidated plan.

C. Comparison Metrics

To provide a way for jurisdictions to measure their progress in affirmatively furthering fair housing over time, and to allow HUD to verify that jurisdictions are taking actions and not just making plans, HUD is proposing a system that would use publicly available metrics to score and rank the CDBG-receiving jurisdictions that submit a consolidated plan that year. By using public data, HUD intends to create a ''dashboard'' that would allow jurisdictions to anticipate where they would rank and therefore plan ahead accordingly. This dashboard will further encourage engagement by allowing a jurisdiction to know exactly where it stands. These rankings would allow HUD to objectively determine a jurisdiction's success in providing quality affordable housing without adjudicated adverse fair housing findings. This ranking system, while useful in helping HUD evaluating compliance with the jurisdiction's requirement to AFFH, would not reflect a determination that the jurisdiction has complied with the Fair Housing Act.

The proposed rule recognizes that jurisdictions face different challenges including tight or slack housing supply, job growth or decline, and shifts in population growth or decline. These different indicators would influence jurisdictions' choices in promoting fair housing choice. A jurisdiction with high job growth and a tight housing market would have different priorities and abilities than a jurisdiction with job declines and a very open housing market. Both would also be different from a jurisdiction with high job growth but a commensurate growth in the availability of housing that keeps housing prices more affordable.

HUD's proposed regulation would compare jurisdictions receiving CDBG funds and submitting a consolidated plan with other similarly situated jurisdictions, taking into account the factors discussed above, to be developed for the final rule. HUD is also considering using different data sets for different categories of jurisdictions.

The regulatory text is intended to be a broad outline of the specific data measures included in the comparison metric. HUD plans to publish a notice for public comment identifying the specific sources of data and the method for creating a jurisdiction's metric score when this rule is finalized.

Question for Comment 7: What are the appropriate economic and population size/growth/decline market conditions categories of local CDBG-receiving jurisdictions that submit consolidated plans? Should there be different categories of States, as well? How many categories should there be?

Question for Comment 8: Given the intentions of HUD for specific types of data discussed more fully below, are there specific data that HUD should use for certain categories and not for others?

Question for Comment 9: What process should HUD undertake for updating the metrics, scoring, weighting, and other components, and how frequently should these updates occur?

1. Scope

Under the proposed rule, HUD would only determine and compare metrics for jurisdictions that submit consolidated plans because they receive CDBG funds. This would allow HUD to rely on the geographic boundaries used by the CDBG program and to focus its resources on the jurisdictions that are likely receiving the most funding from HUD.

Question for Comment 10: Should HUD also rank non-CDBG jurisdictions that still submit consolidated plans? What are the potential obstacles or problems with those rankings?

2. Data

To determine each jurisdiction's success at furthering fair housing choice, HUD would develop a scoring system based on quantitative data generated by publicly available datasets, such as data from the United States Census Bureau, including the American Community Survey, the United States Post Office, and HUD-generated data. These data would seek to represent how well a jurisdiction is providing affordable, quality housing free of violations of the Fair Housing Act and related statutes. HUD would create the scoring system using data related to affordable housing availability, the jurisdiction's housing quality, and adjudicated complaints of violations of the Fair Housing Act or related statutes. HUD would re-evaluate the data set periodically and adjust them through further notice and comment.

a. Lack of Adjudicated Fair Housing Violations

One of the key ways HUD would confirm that program participants fulfill their AFFH responsibilities would be to reward only jurisdictions that are free of material civil rights violations. HUD recognizes that jurisdictions have multiple layers of civil rights enforcement, including state Attorneys General, Fair Housing Initiative Programs, the United States Department of Justice (''DOJ''), and HUD. HUD proposes to take all these methods of enforcement into account in determining a jurisdiction's civil rights record.

HUD proposes to include a yes or no indicator of whether the jurisdiction has an adversely adjudicated fair housing complaint brought by or on behalf of HUD or by the DOJ against the jurisdiction in the previous 5 years. By limiting this indicator to adverse determinations following adjudication, HUD would protect jurisdictions by only penalizing them on this indicator after they have had an opportunity for a hearing and full finding of facts. Jurisdictions with any such adjudicated violations within the previous 5 years would not be eligible for any benefits otherwise available to high-performing jurisdictions.

Question for Comment 11: Are there other methods (aside from a yes or no indicator) for incorporating the complaints into the dashboard? Are there other data points HUD should include in this measure?

Question for Comment 12: HUD is concerned that taking into account adversely adjudicated civil rights cases that were not brought by HUD or DOJ will encourage jurisdictions to settle civil rights claims rather than risk an adverse ruling that would affect the jurisdiction's standing with HUD. HUD seeks comment on whether, and if so how, it could take these cases into account without unduly influencing civil rights litigation.

Question for Comment 13: Are there circumstances in which a jurisdiction should not be held accountable for a negatively adjudicated complaint against a PHA? Are there ways to take adjudications against a PHA into account without penalizing the entire jurisdiction?

b. Affordable Housing

Fair housing choice requires not only the absence of discrimination but the existence of realistic housing options.[36] As stated by Senator Walter Mondale in support of the Fair Housing Act, protection against discrimination does not itself ''overcome the economic

[36] *See* AFFH Rule Guidebook at 4, *available at https://www.hudexchange.info/resources/documents/AFFH-Rule-Guidebook.pdf,* quoting 24 CFR 5.152.

problem of those who could not afford to purchase the house of their choice.'' [37] Ultimately, he continued, ''the laws of supply and demand will take care of who moves into what house in which neighborhood.'' [38] Members of protected classes often find their access to fair housing choice limited by economic factors brought on by a lack of affordable housing.

Affordable housing can advance the goal of providing members of protected classes with access to the neighborhoods of their choice. Some protected class members may want to stay in their neighborhood to maintain access to deep community support systems or proximity to their job. Others who want to leave their neighborhood would benefit from reduced housing costs that make it easier for them to move. Encouraging policies that increase overall access to affordable housing allows residents to gain from improvements to housing conditions in their own neighborhood while providing flexibility to jurisdictions on how to achieve that affordability.

Increasing the availability of affordable housing in a community would help low-income families. However, studies have demonstrated that single-parent households, elderly households, and households of color are more likely to be cost-burdened by housing.[39] Increasing overall affordability will, therefore, help members of protected classes maximize their ability to live where they choose. Having a supply of affordable housing that is sufficient to meet the needs of a jurisdiction's population is crucial to enabling families to live throughout the jurisdiction and promoting fair housing for all protected classes, so HUD is proposing to include data in the comparison metrics to evaluate a jurisdiction based on its availability of affordable housing. To do this, HUD is considering using metrics such as housing prices, fair market rents, the burden housing costs place on very-low- to moderate-income families, the ability of tenants with housing choice vouchers to access housing throughout the jurisdiction, and the existence of excess housing choice voucher reserves showing a failure to fully take advantage of voucher funding available to the jurisdiction.

Question for Comment 14: Are there other data points HUD should use to measure affordability as it relates to fair housing choice? If so, what considerations are needed in using this data to ensure an accurate measure?

Question for Comment 15: What data sources may enable HUD to measure the extent to which residents are living in neighborhoods of their choice, consistent with their means?

Question for Comment 16: With any of the data mentioned above, are there any factors, such as disparities in average income or job growth, for which HUD should control, to ensure that analysis of the data set is an accurate measure of access to fair and affordable housing?

Question for Comment 17: Another idea HUD is considering is ranking jurisdictions based on ''by right'' land use or the amount of additional burden local regulations place on the housing market by unduly increasing housing costs. Do such measures exist? How could HUD work to create one?

Question for Comment 18: Are there other measures that HUD could use or create to encourage the creation of additional housing that is affordable throughout a jurisdiction?

c. Housing Quality and Physical Conditions

Gains generated by widespread affordable housing are not meaningful unless that affordable housing is decent, safe, and sanitary. Without quality affordable housing, members of protected classes will face practical limitations in their housing choices.

Individuals living in poor quality housing experience an increase in chronic illness,[40] respiratory diseases,[41] and injuries.[42] Overcrowding can increase the transmissions of disease and psychological distress.[43] These negative effects can be particularly harmful and long-lasting to children.[44] Dilapidated or abandoned housing stock may also foster crime.[45]

Persistent health problems can also make it difficult for individuals to obtain and maintain employment, threatening their ability to maintain self-sufficiency. This can be particularly acute for individuals with physical disabilities and older adults, for whom deteriorating or inaccessible housing creates a much higher risk of injury.

HUD is considering using worst-case housing needs data, which documents lack of kitchen facilities and adequate plumbing and overcrowding, to determine how well a jurisdiction is encouraging a supply of housing that is of sufficient quality. HUD would also like to consider the prevalence of housing with lead-based paint hazards that cause health issues and the quality of housing in jurisdictions according to HUD REAC inspection scores.

Question for Comment 19: Are there other data points HUD should include to measure housing conditions as they relate to fair housing? If so, are there any additional considerations in using those data points necessary to ensure an accurate measure?

Question for Comment 20: With any of the data mentioned above, should there be additional considerations to ensure that the data set is an accurate measure?

3. Rewards and Other Compliance Incentives

HUD believes that the best way to further fair housing is to encourage collaboration and cooperation among all stakeholders within a jurisdiction, including government, PHAs, nonprofits, and private owners. This rule proposes to provide benefits to both jurisdictions and the entities within jurisdictions that, as demonstrated by comparison metrics, are successful with their AFFH efforts. In addition, this rule would empower HUD to concentrate its assistance and regulatory enforcement resources on the lowest AFFH performers.

a. Rewards

Within each category, HUD proposes to determine the jurisdictions that are outstanding AFFH performers, and grantees and applicants for funding located within those jurisdictions would be eligible for various benefits for the following 2 years. As more fully described below, HUD proposes that the benefits vary according to the program involved, but may include preference

[37] Speech by Senator Mondale on floor of the Senate, February 20, 1968, 114 Cong. Rec. 3421–22, 3421.

[38] *Id.* at 3422.

[39] The State of the Nation's Housing 2018, Joint Center for Housing Studies of Harvard University, 2018, 30–31.

[40] Evans, J., Hyndman, S., Stewart-Brown, S., Smith, D., & Petersen, S., An epidemiological study of the relative importance of damp housing in relation to adult heath, J Epidemiol Community Health, pp. 677–686 (2000), *available at https://jech.bmj.com/content/54/9/677.long.*

[41] Institute of Medicine. Clearing the Air: Asthma and Indoor Air Exposures. Washington, DC: National Academy Press; 2000.

[42] Tinetti ME, Speechley M, & Ginter SF., Risk factors for falls among elderly persons living in the community. N Engl J Med. 1988; 319:1701–1707.

[43] Solari, Claudia D, and Robert D Mare, ''Housing crowding effects on children's wellbeing.'' Social science research vol. 41,2 (2011): 464–76, *available at https://www.ncbi.nlm.nih.gov/pmc/articles/PMC3805127/.*

[44] Coley, R.L., Leventhal, T., Lynch, A.D., & Kull, M. (2013). Relations Between Housing Characteristics and the Well-Being of Low-Income Children and Adolescents. Developmental Psychology. Vol 49(9). Pages 1775–1789, *available at https://www.ncbi.nlm.nih.gov/pmc/articles/PMC3766502/.*

[45] *See, e.g.,* Freedman, Matthew, and Emily G. Owens. ''Low-income housing development and crime.'' *Journal of Urban Economics* 70.2–3 (2011): 115–131.

points on Notices of Funding Availability (NOFAs) or eligibility to receive additional program funds due to reallocations of recaptured appropriated funds and other forms of regulatory relief.

Beginning with the second consolidated plan cycle after the effective date of the rule, HUD also proposes to determine which jurisdictions had the greatest improvement in their metrics over the past five years. The most improved jurisdictions would also be eligible for benefits given to outstanding AFFH performers (if not otherwise already an outstanding AFFH performer).

Question for Comment 21: How should HUD determine ranking of high and low AFFH performers? Should a baseline percentage be used (for example, the top 20 percent and bottom 20 percent), or should some other ranking be used (for example, a ''natural break'' in the distribution where there is a material distinction between jurisdictions)? If a percentage, what is the appropriate percentage, and why? Would it be appropriate to set a percentage and then allow the Secretary to deviate from that baseline when the data warrants it? What would be the effects of using each type of approach?

Question for Comment 22: Should there be two tiers of rewards for high performing jurisdictions, such as ''outstanding'' and ''high pass,'' where ''outstanding'' performers received regulatory relief and extra funding, while ''high pass'' performers received just one category of relief, such as extra funding? What would be the effects of such an approach?

Question for Comment 23: Should HUD reward improvement in a jurisdiction before the first 5-year cycle is complete? If so, how should HUD determine progress between consolidated plan submissions, and what possible benefits should be available?

HUD is interested in determining which jurisdictions are the most effective at meeting their AFFH obligations. HUD believes that, by identifying top performers, other similarly situated jurisdictions can learn from these top performers and may be able to replicate successful practices. By identifying such top performers, HUD would be able to reward and provide incentives to jurisdictions that make significant efforts to address housing discrimination. This jurisdiction-driven approach would also allow the top performers to serve as a model for HUD in designing future programs and fair housing efforts.

HUD is proposing to reward outstanding AFFH performers through advantages in grant competitions. While many funding programs are based on a statutory formula, there are numerous grant programs, including Choice Neighborhood Planning and Implementation Grants, Jobs-Plus, lead-based paint reduction programs, ROSS and FSS programs, and the Fair Housing Initiative Program, where it may be appropriate to award points in the competition to applicants that are within outstanding AFFH jurisdictions. In the development of each competitive NOFA, HUD proposes to consider whether it is appropriate to use the grant funding to provide a benefit to potential recipients in an outstanding AFFH jurisdiction.

In addition to potential NOFA bonuses, HUD would, in the development of future demonstration programs, consider whether the demonstration should prioritize participants in outstanding AFFH jurisdictions. Programs that may fall into this category include new designations of PHAs as Moving to Work (MTW) agencies, priorities for conversions of assistance under the Rental Assistance Demonstration (RAD) program, or selection for participation in mobility demonstrations.

HUD is also considering whether outstanding AFFH jurisdictions should be eligible for various forms of regulatory relief, either from the AFFH process itself or as part of the larger programmatic regulatory requirements. HUD is also open to seeking additional statutory flexibility to reward outstanding AFFH jurisdictions.

Question for Comment 24: Are there other rewards that HUD should consider for outstanding AFFH performers? Are there statutory or regulatory changes that HUD should pursue to increase the availability of such rewards?

Question for Comment 25: Are there specific forms of regulatory relief that HUD should consider for outstanding AFFH performers?

b. Compliance Incentives

If a jurisdiction falls in the bottom ranking, HUD proposes to consider the accuracy of the jurisdiction's AFFH certification under 24 CFR 91.5. The jurisdiction would have the opportunity to respond in writing to provide additional information to demonstrate that they are affirmatively furthering fair housing to the best of their ability. This demonstration may include evidence that the jurisdiction has taken concrete and measurable steps for improvement, additional information about specific obstacles faced in achieving AFFH goals, structural and systematic reasons for lack of movement in the comparison metrics, or other information the jurisdiction believes relevant.

If HUD, following existing procedures, were to determine that the additional information provided by the jurisdiction is sufficient, HUD proposes to accept the certification. However, if the additional information was deemed insufficient, HUD proposes to reject the AFFH certification of the jurisdiction and to follow the procedures under 24 CFR 91.500 to provide the jurisdiction with the specific steps the jurisdiction must follow for HUD to accept the certification. Such steps may include additional public participation requirements for the development of the next AFFH certification or specific remedies for deficiencies HUD has discovered as part of the review process. If a jurisdiction continues to be unable to provide adequate assurances that it will AFFH, HUD proposes that the grant may be withheld.

Question for Comment 26: Are there other remedies HUD should consider requiring of jurisdictions who are not improving in their comparison metrics?

Just as with outstanding or improved AFFH performers, HUD is also very interested in identifying which jurisdictions may need further assistance in meeting their AFFH obligations. HUD believes that a jurisdiction that is struggling to improve on the neutral metrics, or falls significantly below its peers, may be a jurisdiction that needs help in other areas of compliance, as well. Therefore, HUD proposes to use the identification of the lowest performers in AFFH to target its resources in many areas, such as grant administration and regulatory oversight, not just in civil rights enforcement.

HUD's intent is not to punish pioneering jurisdictions for creative AFFH strategies that turn out not to be effective. HUD recognizes that sometimes unsuccessful efforts are just as important to learning as successful efforts. HUD would encourage jurisdictions to share lessons learned from unsuccessful efforts and successful efforts alike. HUD also expects that the annual report process would encourage jurisdictions to regularly consider whether their action plans are promoting change in the right direction and, if not, proposes to allow the jurisdictions a chance to recalibrate and change course. This would help create a cycle of accountability that allows jurisdictions to highlight successes, analyze failures, and course-correct, if necessary.

Question for Comment 27: HUD is seeking input on possible mechanisms for sharing information across jurisdictions regarding the success of efforts to AFFH, and the extent to which any such mechanisms should become requirements of the regulation.

4. Appeals

If a jurisdiction were to believe that an error, such as a failure to consider a relevant factor or a statistical anomaly, has resulted in the jurisdiction being improperly ranked, the jurisdiction would be able to respond to HUD by identifying the error and requesting a recalculation of the comparison metrics, or consideration of a factor which was not adequately accounted for in the comparison metrics. HUD would review the jurisdiction's response and, if HUD determines it necessary, recalculate the jurisdiction's ranking without impacting the rankings of others.

D. Annual Performance Reports and Amendments

HUD recognizes that AFFH efforts may take time to realize results, but jurisdictions are encouraged to still work to AFFH on a consistent basis throughout their consolidated plan cycles. In the years between 5-year plans, jurisdictions would need to submit, in their annual performance reports under 24 CFR 91.520, annual progress updates to the goals or obstacles they submitted in their most recent AFFH certification. HUD is also proposing to add an AFFH component to the annual performance review conducted by HUD. This review would not be intended to substitute HUD's judgment for the judgment of the jurisdiction. Instead, under HUD's rational basis review, HUD would accept performance reports under 24 CFR 92.520, where the steps taken are each rationally related to the goal and obstacles identified in the jurisdiction's AFFH certification. This language is intended to follow the judicial definition of rational basis review closely.[46]

HUD believes that this level of review would provide the proper level of oversight without undue interference. HUD recognizes that affirmatively furthering fair housing is a necessarily complicated area implicating various policy concerns. Unlike enforcement actions for discrimination, HUD is seeking only to confirm that jurisdictions are fulfilling their statutory duty and will trust, in the absence of evidence to the contrary, that a jurisdiction's preferred method of affirmatively furthering fair housing is a valid method of fulfilling its statutory duty. The Fair Housing Act does not mandate that jurisdictions be second-guessed for the reasonable choices they make. The Supreme Court in *Inclusive Communities* said that the Fair Housing Act is not a means of second-guessing the reasonable choices of jurisdictions.[47] A higher level of scrutiny would invite second-guessing. This level of scrutiny also encourages experimentation and prevents HUD from substituting its judgment for that of local jurisdictions. HUD recognizes that some jurisdictions will pioneer methods of advancing fair housing, which may not always succeed but nevertheless should not be punished for their ingenuity.

Jurisdictions would not be expected to address every goal or obstacle every year. However, under the proposed rule, HUD would expect that jurisdictions would, over the course of a 5-year period, follow through on all their commitments in their AFFH certification by taking some steps towards each of the goals in the AFFH certification.

Following the same procedures as amendments to the consolidated plan, jurisdictions would be able to amend or change their goals if they discover a material barrier to achieving the goal or a reason why that goal is no longer the best means to AFFH. HUD would review these reports for completion and to verify that jurisdictions used concrete and measurable standards. HUD would not make a qualitative assessment of such reports.

E. PHAs

This rule seeks to tailor AFFH requirements applicable to PHAs while still verifying that PHAs are fulfilling their AFFH obligations. PHAs are already required to participate in the development of the consolidated plan actively. This rule would emphasize this requirement and establish that a PHA is generally required to AFFH only in its programs and in the areas under its direct control, and to certify that it will AFFH. A PHA would not be required to submit a certification detailing AFFH goals and obstacles. However, a PHA would be required to certify that it has consulted with the local jurisdiction on AFFH and would AFFH in its programs and in areas under its direct control. If a PHA has been subject to a HUD letter of finding or an adjudicated negative finding in a complaint brought by HUD or DOJ, finding a violation of the Fair Housing Act in the last two years, then HUD proposes that the PHA must include with its certification an explanation of what steps the PHA has taken and is taking to resolve the violation.

Question for Comment 28: As discussed above concerning jurisdictions, HUD is concerned that taking into account adversely adjudicated civil rights cases which were not brought by HUD or DOJ will unduly encourage PHAs to settle civil rights claims rather than risk an adverse ruling affecting the PHA's standing with HUD. HUD seeks comment on whether, and if so how, it could take these cases into account without unduly influencing civil rights litigation.

Question for Comment 29: What should cooperation between PHAs and consolidated plan jurisdictions look like?

Question for Comment 30: How should this rule balance the need for PHA engagement and contribution to an area's AFFH requirements while not creating requirements that may be overly burdensome?

V. Findings and Certifications

Executive Orders 12866 and 13563, Regulatory Planning and Review

Pursuant to Executive Order 12866 (Regulatory Planning and Review), a determination must be made whether a regulatory action is significant and therefore, subject to review by the Office of Management and Budget (OMB) in accordance with the requirements of the Executive Order. Executive Order 13563 (Improving Regulations and Regulatory Review) directs executive agencies to analyze regulations that are ''outmoded, ineffective, insufficient, or excessively burdensome, and to modify, streamline, expand, or repeal them in accordance with what has been learned.'' Executive Order 13563 also directs that, where relevant, feasible, and consistent with regulatory objectives, and to the extent permitted by law, agencies are to identify and consider regulatory approaches that reduce burdens and

[46] *See, e.g., McGowan* v. *Maryland,* 366 U.S. 420, 425–26 (1961) (Under the rational basis standard, the constitutional safeguard of equal protection ''is offended only if the classification rests on grounds wholly irrelevant to the achievement of the State's objective. State legislatures are presumed to have acted within their constitutional power despite the fact that, in practice, their laws result in some inequality. A statutory determination will not be set aside if any statement of facts reasonably may be conceived to justify it.''); *see also James* v. *Strange,* 407 U.S. 128, 140–42 (1972) (holding that rational basis review under the Equal Protection Clause ''imposes a requirement of some rationality in the nature of the class singled out'' and that treating one class of debtors differently from another without reason did not meet rational basis scrutiny).

[47] *Inclusive Communities,* 135 S. Ct. at 2522.

maintain flexibility and freedom of choice for the public. HUD believes that this proposed rule would empower local jurisdictions to determine how to AFFH rather than mandating that jurisdictions act on specific policies, and thus create a regulatory process that empowers individual jurisdictions to act on local determinations of need and within local budgetary and resource constraints.

The proposed rule has been determined to be a ''significant regulatory action,'' as defined in section 3(f) of Executive Order 12866, but not economically significant. The docket file is available for public inspection online at *www.regulations.gov*.

Executive Order 13771, Regulatory Costs

Executive Order 13771, entitled ''Reducing Regulation and Controlling Regulatory Costs,'' was issued on January 30, 2017. This proposed rule is expected to be an E.O. 13771 deregulatory action. While the burden in creating a consolidated plan is expected to increase slightly as the jurisdiction prepares a Fair Housing Report, the overall burden on the jurisdiction is greatly lessened because the lengthy Assessment of Fair Housing (AFH), with its separate community engagement and reporting requirements, would be eliminated under this proposal. Jurisdictions would be able to determine their actions to AFFH based on their capacity and needs, allowing jurisdictions to avoid burdensome requirements beyond their abilities.

The previously approved information collections for the AFFH Local Government and PHA and Assessment Tools (2529–0054 and 2529–0055, respectively) had a total, combined 665,862 burden hours for all respondents. This was due to the extensive nature of the tools and the additional public meeting requirements to complete an AFH. HUD has already temporarily withdrawn the Local Government Assessment Tool, and this proposed rule would make that removal permanent. By fully incorporating the proposed AFFH process into the existing consolidated plan process, HUD expects that the AFFH process will result in only 10 hours per response, or a total of 12,660 total hours, a significant reduction from the previous process requirements.

The proposed rule significantly reduces the reporting burden for jurisdictions in the formulation of AFFH strategies, reducing costs by an estimated $23.7 million per year. Under the proposed rule, HUD would measure jurisdictions' progress toward their identified AFFH goals through publicly available data focused on the availability and quality of affordable housing, reward high performing jurisdictions with unspecified incentives, and provide technical assistance to low performing jurisdictions. Qualitatively, if the metrics and incentives are effective in influencing jurisdictions' behavior, availability, and quality of affordable housing options should increase as Federal and local resources are devoted to such activities.

Executive Order 12612, Federalism

Executive Order 13132 (entitled ''Federalism'') prohibits an agency from publishing any rule that has federalism implications if the rule either imposes substantial direct compliance costs on state and local governments and is not required by statute, or the rule preempts state law, unless the agency meets the consultation and funding requirements of Section 6 of the Executive Order. This rule would not have federalism implications and would not impose substantial direct compliance costs on state and local governments or preempt state law within the meaning of the Executive Order.

Environmental Impact

This proposed rule is a policy document that sets out fair housing and nondiscrimination standards. Accordingly, under 24 CFR 50.19(c)(3), this proposed rule is categorically excluded from environmental review under the National Environmental Policy Act of 1969 (42 U.S.C. 4321 *et seq.*).

Regulatory Flexibility Act

The Regulatory Flexibility Act (5 U.S.C. 601 *et seq.*) generally requires an agency to conduct a regulatory flexibility analysis of any rule subject to notice and comment rulemaking requirements, unless the agency certifies that the rule will not have a significant economic impact on a substantial number of small entities. The undersigned certifies that this rule would not have a significant economic impact on a substantial number of small entities.

This rule proposes to strengthen the way in which HUD and its program participants meet the requirement under the Fair Housing Act to take affirmative steps to further fair housing. The preamble identifies the statutes and executive orders that address this requirement and that place responsibility directly on certain HUD program participants, specifically, local governments, states, and PHAs, underscoring that the use of federal funds must promote housing choice and open communities. Although local governments, states, and PHAs must affirmatively further fair housing independent of any regulatory requirement imposed by HUD, HUD recognizes its responsibility to provide leadership and direction in this area, while preserving local determination of fair housing needs and strategies.

This rule primarily focuses on establishing a regulatory framework by which program participants may more effectively report how they meet their statutory obligation to affirmatively further fair housing. This rule builds on the statutory requirements to affirmatively further fair housing in conjunction with the development of consolidated plans for state and local governments and PHA Plans for PHAs and, in doing so, provides for all program participants to comply with their statutory requirements in a cost-efficient and effective manner.

Jurisdictions submitting consolidated plans do so usually because they receive State or Entitlement CDBG funds. In order to be an entitlement jurisdiction, the jurisdiction must be a principal city of a metropolitan statistical area, be a metropolitan city with a population of at least 50,000, or be a qualified urban county with a population of at least 200,000. This rule would change the certification requirements for PHAs in their annual plans to require that PHAs certify they will participate in the development of the consolidated plan. This participation will naturally be shaped by the needs and resources of the PHA.

As discussed more fully in the ''Executive Order 13771, Regulatory Costs'' section, above, and in the proposed regulatory impact analysis (RIA), the rule proposes to reduce the administrative burden on program participants in preparing and submitting an AFFH certification to HUD as compared to the current AFH process. The proposed rule would do this by fully incorporating the AFFH process into the consolidated plan process and allowing jurisdictions to determine how to AFFH based on their unique combination of resources, economic situations, and local needs.

Nevertheless, HUD is sensitive to the fact that the uniform application of requirements on entities of differing sizes may place a disproportionate burden on small entities. HUD, therefore, is soliciting alternatives for compliance from small entities as to how these small entities might comply in a way less burdensome to them.

Paperwork Reduction Act

In accordance with the Paperwork Reduction Act of 1995 (44 U.S.C. 3501–3520), an agency may not conduct or sponsor, and a person is not required to respond to, a collection of information, unless the collection displays a currently valid Office of Management and Budget (OMB) control number. The information collection requirements contained in this proposed rule have been approved by OMB under the Paperwork Reduction Act and assigned OMB control number 2506–0117 (Consolidated Plan, Annual Action Plan & Annual Performance Report). The collection requirement will be amended to reflect the altered burden contained in this proposed rule.

HUD anticipates that the impact of this rule on document preparation time is reduced from the burden that it may otherwise be because the rule integrates the AFFH requirements with the consolidated and PHA planning processes. Additionally, states, local governments, and PHAs are already required to prepare written AFFH plans, undertake activities to overcome identified barriers to fair housing choice, and maintain records of the activities and their impacts. The principal differences imposed by this proposed rule would be that the program participants are no longer required to create plans based on specified data but would instead be permitted to determine how to AFFH based on their local needs and available resources. In addition, because the AFFH process is wholly incorporated into the existing consolidated and PHA planning processes, local governments, states, and PHAs would not have to establish additional AFFH procedures.

HUD published a notice on May 23, 2018, temporarily withdrawing the information collection in OMB Control Number 2529–0054, the Assessment Tool for Local Governments. This proposed rule makes that removal permanent, along with the removal of the Assessment Tool for PHAs, OMB Control Number 2529–0055.

The burden of the information collections in this proposed rule is estimated as follows:

Information collection	Number of responses		Total annual burden hours		Hourly cost *	Total Annual Cost	
	Current	New	Current	New		Current	New
Consolidated Plan for Localities and States	** 1,266	1,266	393,338	405,998	$34	$13,373,492	$13,803,932
Assessment Tool for Local Governments ***	1,266	0	230,993	0	34	7,853,762	0
Assessment Tool for PHAs	3,942	0	247,302	0	34	8,408,268	0
Totals			871,633	405,998		29,635,522	13,803,932

* Estimates assume a blended hourly rate that is equivalent to a GS–12, Step 5, Federal Government Employee.

** Total localities of 1,266 includes 1,209 entitlements + 3 non-entitlements (Hawaii, Kauai, Maui), 4 Insular Areas (Guam, Mariana Islands, Samoa, Virgin Islands), and 50 states.

*** This tool was temporarily taken down on May 23, 2018, by notice published at 83 FR 23922.

In accordance with 5 CFR 1320.8(d)(1), HUD is soliciting comments from members of the public and affected agencies concerning the information collection requirements in the proposed rule regarding:

(1) Whether the proposed collection of information is necessary for the proper performance of the functions of the agency, including whether the information will have practical utility;

(2) The accuracy of the agency's estimate of the burden of the proposed collection of information;

(3) Whether the proposed collection of information enhances the quality, utility, and clarity of the information to be collected; and

(4) Whether the proposed information collection minimizes the burden of the collection of information on those who are to respond; including through the use of appropriate automated collection techniques or other forms of information technology (*e.g.,* permitting electronic submission of responses).

Interested persons are invited to submit comments regarding the information collection requirements in this rule. Under the provisions of 5 CFR part 1320, OMB is required to make a decision concerning this collection of information between 30 and 60 days after the publication date. Therefore, a comment on the information collection requirements is best assured of having its full effect if OMB receives the comment within 30 days of the publication. This time frame does not affect the deadline for comments to the agency on the proposed rule, however. Comments must refer to the proposed rule by name and docket number (FR–6123) and must be sent to:

HUD Desk Officer, Office of Management and Budget, New Executive Office Building, Washington, DC 20503, Fax number: 202–395–6947

and

Colette Pollard, HUD Reports Liaison Officer, Department of Housing and Urban Development, 451 7th Street SW, Room 2204, Washington, DC 20410

Interested persons may submit comments regarding the information collection requirements electronically through the Federal eRulemaking Portal at *http://www.regulations.gov.* HUD strongly encourages commenters to submit comments electronically. Electronic submission of comments allows the commenter maximum time to prepare and submit a comment, ensures timely receipt by HUD, and enables HUD to make them immediately available to the public. Comments submitted electronically through the *http://www.regulations.gov* website can be viewed by other commenters and interested members of the public. Commenters should follow the instructions provided on that site to submit comments electronically.

Unfunded Mandates Reform Act

Title II of the Unfunded Mandates Reform Act of 1995 (Pub. L. 104–4; approved March 22, 1995) (UMRA) establishes requirements for Federal agencies to assess the effects of their regulatory actions on state, local, and tribal governments, and on the private sector. This rule does not impose any Federal mandates on any state, local, or tribal government, or on the private sector, within the meaning of the UMRA.

List of Subjects

24 CFR Part 5

Administrative practice and procedure, Aged, Claims, Crime,

Government contracts, Grant programs-housing and community development, Individuals with disabilities, Intergovernmental relations, Loan programs-housing and community development, Low and moderate income housing, Mortgage insurance, Penalties, Pets, Public housing, Rent subsidies, Reporting and recordkeeping requirements, Social security, Unemployment compensation, Wages.

24 CFR Part 91

Aged; Grant programs-housing and community development; Homeless; Individuals with disabilities; Low and moderate income housing; Reporting and recordkeeping requirements.

24 CFR Part 92

Administrative practice and procedure; Low and moderate income housing; Manufactured homes; Rent subsidies; Reporting and recordkeeping requirements.

24 CFR Part 570

Administrative practice and procedure; American Samoa; Community development block grants; Grant programs-education; Grant programs-housing and community development; Guam; Indians; Loan programs-housing and community development; Low and moderate income housing; Northern Mariana Islands; Pacific Islands Trust Territory; Puerto Rico; Reporting and recordkeeping requirements; Student aid; Virgin Islands.

24 CFR Part 574

Community facilities; Grant programs-housing and community development; Grant programs-social programs; HIV/AIDS; Low and moderate income housing; Reporting and recordkeeping requirements.

24 CFR Part 576

Community facilities; Grant programs-housing and community development; Grant programs-social programs; Homeless; Reporting and recordkeeping requirements.

24 CFR Part 903

Administrative practice and procedure; Public housing; Reporting and recordkeeping requirements.

24 CFR Part 905

Grant programs-housing and community development; Public housing; Reporting and recordkeeping requirements.

Accordingly, for the reasons described in the preamble, HUD proposes to amend 24 CFR parts 5, 91, 92, 570, 574, 576, 903, 905 as follows:

PART 5—GENERAL HUD PROGRAM REQUIREMENTS; WAIVERS

■ 1. The authority citation for part 5, subpart A, continues to read as follows:

Authority: 29 U.S.C. 794, 42 U.S.C. 1437a, 1437c, 1437c–1(d), 1437d, 1437f, 1437n, 3535(d), and Sec. 327, Pub. L. 109–115, 119 Stat. 2936; 42 U.S.C. 3600–3620; 42 U.S.C. 5304(b); 42 U.S.C. 12101 *et seq.;* 42 U.S.C. 12704–12708; E.O. 11063, 27 FR 11527, 3 CFR, 1958–1963 Comp., p. 652; E.O. 12892, 59 FR 2939, 3 CFR, 1994 Comp., p. 849.

■ 2. Revise § 5.150 to read as follows:

§ 5.150 Obligation to Affirmatively Further Fair Housing.

(a)(1) Every recipient of HUD funding must affirmatively further fair housing by acting in a manner consistent with reducing obstacles within the participant's sphere of influence to providing fair housing choice. HUD may consider a failure to meet the duty to affirmatively fair housing a violation of program requirements.

(2) *Fair housing choice* means, within a HUD program participant's sphere of influence, that individuals and families have the opportunity and options to live where they choose, within their means, without unlawful discrimination related to race, color, religion, sex, familial status, national origin, or disability. Fair housing choice encompasses:

(i) Protected choice, which means access to housing without discrimination;

(ii) Actual choice, which means not only that affordable housing options exist, but that information and resources are available to enable informed choice; and

(iii) Quality choice, which means access to affordable housing options that are decent, safe, and sanitary, and, for persons with disabilities, access to accessible housing as required under civil rights laws.

(b) Affirmatively furthering fair housing requires an effort that is in addition to, and not a substitute for, compliance with the specific requirements of the Fair Housing Act.

(c) For the purposes of affirmatively furthering fair housing, HUD does not expect that recipients of funding will be able to immediately, completely, or to the satisfaction of all persons, address each impediment to fair housing choice, whether identified, known but not prioritized, or alleged by others. Nothing in this paragraph relieves jurisdictions of their obligations under other civil rights and fair housing statutes and regulations.

§ 5.151 through § 5.154 [Removed and Reserved]

■ 3. Remove § 5.151 through § 5.154.

■ 4. Add § 5.155 to read as follows:

§ 5.155 Jurisdictional risk analyses.

(a) *Purpose.* HUD will conduct an analysis and ranking of jurisdictions to determine which jurisdictions are especially succeeding at affirmatively furthering fair housing and which should be subject to an enhanced review and may need additional assistance to affirmatively further fair housing. This ranking is not a determination that the jurisdiction has complied with the Fair Housing Act.

(b) *Frequency.* HUD will conduct the analysis and ranking every year.

(c) *Method.* (1) HUD will, using publicly available data and databases, establish a base score for each jurisdiction regarding the extent to which there is an adequate supply of affordable and available quality housing for rent and for sale to support fair housing choice. The following are non-exclusive examples of the type of data for each jurisdiction:

(i) Median home value and contract rent.

(ii) Household cost burden.

(iii) Percentage of dwellings lacking complete plumbing or kitchen facilities.

(iv) Vacancy rates.

(v) Rates of lead-based paint poisoning.

(vi) Rates of subpar Public Housing conditions.

(vii) Availability of housing accepting housing choice vouchers throughout the jurisdiction.

(viii) The existence of excess housing choice voucher reserves.

(ix) Availability of housing accessible to persons with disabilities.

(2) HUD will initially establish and periodically evaluate the data used in paragraph (1) of this section through a **Federal Register** notice after opportunity for public comment.

(3) HUD will create a ranking score for each jurisdiction, using a method to be specified in a **Federal Register** notice after opportunity for public comment, ranking jurisdictions more favorably for high relative performance in the objective measures set forth in paragraph (c)(1) of this section. HUD will then rank the jurisdictions based on this score, divided into the following categories:

(i) Jurisdictions with population growth and tight housing markets.

(ii) Jurisdictions with population growth and loose housing markets.

(iii) Jurisdictions with population decline and tight housing markets.

(iv) Jurisdictions with population decline and loose housing markets.

(v) States with significant population growth.

(vi) States without significant population growth.

(d) *Results.* (1) After ranking the jurisdictions as described in paragraph (c)(3) of this section, HUD will designate the top ranking jurisdictions submitting a consolidated plan that year in each category as ''outstanding AFFH performers'' and the bottom ranking jurisdictions in each category as ''low-ranking jurisdictions.'' Outstanding jurisdictions will, for the 24-month period following the approval of the jurisdiction's consolidated plan, be eligible for potential benefits, including additional points in funding competitions and eligibility for additional program funds due to reallocations of recaptured funds as may be provided in NOFAs. Low-ranking jurisdictions may have their AFFH certifications questioned under 24 CFR part 91.

(2) Beginning with the second submission of AFFH certifications under 24 CFR part 91 after [EFFECTIVE DATE OF FINAL RULE], HUD will determine how much each jurisdiction has improved according to the factors in paragraph (c) of this section. HUD will also designate as ''outstanding AFFH performers'' jurisdictions that have shown the most improvement since their last strategic plan submission. These jurisdictions will be eligible for the benefits of that designation for the 24-month period following the approval of the jurisdiction's consolidated plan.

(3)(i) No jurisdiction may be considered an outstanding AFFH performer if the jurisdiction or, for a local government, any PHA operating within the jurisdiction, has in the past five years been found by a court or administrative law judge in a case brought by or on behalf of HUD or by the United States Department of Justice to be in violation of civil rights law unless, at the time of the submission of the AFFH certification, the finding has been successfully appealed or otherwise set aside.

(ii) No jurisdiction may be considered an outstanding AFFH performer if HUD has disapproved the previous certification to affirmatively further fair housing submitted for a consolidated plan or declared an annual performance report unsatisfactory under 24 CFR 91.520(i)(2) in the previous 5 years.

(e) *Appeals.* (1) If a jurisdiction believes that an error has resulted in the jurisdiction being improperly designated a low-performing jurisdiction or not designated an outstanding AFFH performer, the jurisdiction may send a written notification to HUD, identifying the error and requesting the recalculation of the comparison metrics or consideration of an additional factor.

(2) HUD will review the request within 45 business days and either recalculate the jurisdiction's ranking without affecting the rankings of other jurisdictions or send a written denial of the request to the jurisdiction explaining why the request was denied.

§ 5.156 through § 5.168 [Removed]

■ 5. Remove § 5.156 through § 5.168.

PART 91—CONSOLIDATED SUBMISSIONS FOR COMMUNITY PLANNING AND DEVELOPMENT PROGRAMS

■ 6. The authority citation for part 91 continues to read as follows:

Authority: 42 U.S.C. 3535(d), 3601–3619, 5301–5315, 11331–11388, 12701–12711, 12741–12756, and 12901–12912.

■ 7. In § 91.5 revise the undesignated introductory text to read as follows.

§ 91.5 Definitions.

The terms Affirmatively Furthering Fair Housing, elderly person, and HUD are defined in 24 CFR part 5.

* * * * *

■ 8. In § 91.100 revise paragraphs (a)(1), (c)(1), and (e) to read as follows:

§ 91.100 Consultation; local governments.

(a) * * *

(1) When preparing the consolidated plan, the jurisdiction shall consult with other public and private agencies that provide assisted housing, health services, and social services (including those focusing on services to children, elderly persons, persons with disabilities, persons with HIV/AIDS and their families, homeless persons), community-based and regionally-based organizations that represent protected class members, and organizations that enforce fair housing laws. When preparing the consolidated plan, the jurisdiction shall also consult with public and private organizations. Commencing with consolidated plans submitted on or after January 1, 2018, such consultations shall include broadband internet service providers, organizations engaged in narrowing the digital divide, agencies whose primary responsibilities include the management of flood prone areas, public land or water resources, and emergency management agencies.

* * * * *

(c) * * * (1) The jurisdiction shall consult with local PHAs operating in the jurisdiction regarding consideration of public housing needs, planned programs and activities, strategies for affirmatively furthering fair housing, and proposed actions to affirmatively further fair housing in the consolidated plan. This consultation will help provide a better basis for the certification by the authorized official that the PHA Plan is consistent with the consolidated plan and the local government's description of its strategy for affirmatively furthering fair housing and the manner in which it will address the needs of public housing and, where necessary, the manner in which it will provide financial or other assistance to a troubled PHA to improve the PHA's operations and remove the designation of troubled, as well as obtaining PHA input on addressing fair housing issues in the Public Housing and Housing Choice Voucher programs.

* * * * *

(e) * * *

(1) The jurisdiction shall consult with community-based and regionally based organizations that represent protected class members, and organizations that enforce fair housing laws, such as State or local fair housing enforcement agencies (including participants in the Fair Housing Assistance Program (FHAP)), fair housing organizations and other nonprofit organizations that receive funding under the Fair Housing Initiative Program (FHIP), and other public and private fair housing service agencies, to the extent that such entities operate within its jurisdiction. This consultation will help provide a better basis for the jurisdiction's certification to affirmatively further fair housing and other portions of the consolidated plan concerning affirmatively furthering fair housing. Consultation must specifically seek input on how the goals identified in the jurisdiction's certification to affirmatively further fair housing will inform the priorities and objectives of the consolidated plan.

(2) This consultation must occur with any organizations that have relevant knowledge or data to inform the certification to affirmatively further fair housing and that are sufficiently independent and representative to provide meaningful feedback to a jurisdiction on the consolidated plan and its implementation.

■ 9. In § 91.105 revise paragraph (e)(1) to read as follows:

§ 91.105 Citizen participation plan; local governments.

* * * * *

(e) * * *

(1)(i) *Consolidated plan.* The citizen participation plan must provide for at least two public hearings per year to obtain residents' views and to respond

to proposals and questions, to be conducted at a minimum of two different stages of the program year. Together, the hearings must address housing and community development needs, development of proposed activities, proposed strategies and actions for affirmatively furthering fair housing, and a review of program performance.

(ii) *Minimum number of hearings.* To obtain the views of residents of the community on housing and community development needs, including priority nonhousing community development needs and affirmatively furthering fair housing, the citizen participation plan must provide that at least one of these hearings is held before the proposed consolidated plan is published for comment.

* * * * *

■ 10. In § 91.110 revise paragraph (a) to read as follows:

§ 91.110 Consultation; States.

(a) When preparing the consolidated plan, the State shall consult with public and private agencies that provide assisted housing (including any State housing agency administering public housing), health services, social services (including those focusing on services to children, elderly persons, persons with disabilities, persons with HIV/AIDS and their families, and homeless persons), and State-based and regionally based organizations that represent protected class members and organizations that enforce fair housing laws during preparation of the consolidated plan.

(1) With respect to public housing or Housing Choice Voucher programs, the State shall consult with any housing agency administering public housing or the section 8 program on a Statewide basis, as well as all PHAs that certify consistency with the State's consolidated plan. State consultation with these entities may consider public housing needs, planned programs and activities, strategies for affirmatively furthering fair housing, and proposed actions to affirmatively further fair housing. This consultation helps provide a better basis for the certification by the authorized official that the PHA Plan is consistent with the consolidated plan and the State's description of its strategy for affirmatively furthering fair housing, and the manner in which the State will address the needs of public housing and, where applicable, the manner in which the State may provide financial or other assistance to a troubled PHA to improve its operations and remove such designation, as well as in obtaining PHA input on addressing fair housing issues in public housing and the Housing Choice Voucher programs. This consultation also helps ensure that activities with regard to affirmatively furthering fair housing, local drug elimination, neighborhood improvement programs, and resident programs and services, funded under a PHA's program and those funded under a program covered by the consolidated plan, are fully coordinated to achieve comprehensive community development goals and affirmatively further fair housing. If a PHA is required to implement remedies under a Voluntary Compliance Agreement, the State should consult with the PHA and identify actions the State may take, if any, to assist the PHA in implementing the required remedies.

(2) The State shall consult with State-based and regionally based organizations that represent protected class members, and organizations that enforce fair housing laws, such as State fair housing enforcement agencies (including participants in the Fair Housing Assistance Program (FHAP)), fair housing organizations and other nonprofit organizations that receive funding under the Fair Housing Initiative Program (FHIP), and other public and private fair housing service agencies, to the extent such entities operate within the State. This consultation will help provide a better basis for the State's certification to affirmatively further fair housing, and other portions of the consolidated plan concerning affirmatively furthering fair housing. This consultation should occur with organizations that have the capacity to engage with data informing the certification to affirmatively further fair housing and be sufficiently independent and representative to provide meaningful feedback on the consolidated plan and its implementation. Consultation on the consolidated plan shall specifically seek input into how the goals identified in the jurisdiction's certification to affirmatively further fair housing inform the priorities and objectives of the consolidated plan. When preparing the consolidated plan, the State shall also consult with public and private organizations. Commencing with consolidated plans submitted on or after January 1, 2018, such consultations shall include broadband internet service providers, organizations engaged in narrowing the digital divide, agencies whose primary responsibilities include the management of flood prone areas, public land or water resources, and emergency management agencies.

* * * * *

■ 11. In § 91.115, revise the heading and introductory text of paragraph (b) and paragraphs (b)(3), (c), and (f) through (h) to read as follows:

§ 91.115 Citizen participation plan; States.

* * * * *

(b) *Development of the consolidated plan.* The citizen participation plan must include the following minimum requirements for the development of the consolidated plan:

* * * * *

(3)(i) The citizen participation plan must state how and when adequate advance notice of the hearing will be given to residents, with sufficient information published about the subject of the hearing to permit informed comment. (Publishing small print notices in the newspaper a few days before the hearing does not constitute adequate notice. Although HUD is not specifying the length of notice required, HUD would consider 2 weeks adequate.)

(ii) The citizen participation plan must provide that the hearing be held at a time and accessible location convenient to potential and actual beneficiaries, and with accommodation for persons with disabilities. The citizen participation plan must specify how it will meet these requirements.

(iii) The citizen participation plan must identify how the needs of non-English speaking residents will be met in the case of a public hearing where a significant number of non-English speaking residents can be reasonably expected to participate.

* * * * *

(c) *Amendments*—(1) *Criteria for amendment to consolidated plan.* The citizen participation plan must specify the criteria the State will use for determining what changes in the State's planned or actual activities constitute a substantial amendment to the consolidated plan. (See § 91.505.) The citizen participation plan must include, among the criteria for a consolidated plan, substantial amendment changes in the method of distribution of such funds.

(2) The citizen participation plan must provide residents and units of general local government with reasonable notice and an opportunity to comment on consolidated plan substantial amendments. The citizen participation plan must state how reasonable notice and an opportunity to comment will be given. The citizen participation plan must provide a period, of not less than 30 calendar days, to receive comments on the consolidated plan substantial amendment before the consolidated

plan substantial amendment is implemented.

(3) The citizen participation plan shall require the State to consider any comments or views of its residents and units of general local government received in writing, or orally at public hearings, if any, in preparing the substantial amendment of the consolidated plan. A summary of these comments or views, and a summary of any comments or views not accepted and the reasons why, shall be attached to the substantial amendment of the consolidated plan.

* * * * *

(f) *Availability to the public.* The citizen participation plan must provide that the consolidated plan as adopted, consolidated plan substantial amendments, and the performance report will be available to the public, including the availability of materials in a form accessible to persons with disabilities, upon request. The citizen participation plan must state how these documents will be available to the public.

(g) *Access to records.* The citizen participation plan must require the State to provide its residents, public agencies, and other interested parties with reasonable and timely access to information and records relating to the State's consolidated plan and use of assistance under the programs covered by this part during the preceding 5 years.

(h) *Complaints.* The citizen participation plan shall describe the State's appropriate and practicable procedures to handle complaints from its residents related to the consolidated plan, consolidated plan amendments, and the performance report. At a minimum, the citizen participation plan shall require that the State must provide a timely, substantive written response to every written resident complaint, within an established period of time (within 15 working days, where practicable, if the State is a CDBG grant recipient).

* * * * *

■ 12. In § 91.205 revise paragraph (b) to read as follows:

§ 91.205 Housing and homeless needs assessment.

* * * * *

(b) *Categories of persons affected.* (1) The plan shall estimate the number and type of families in need of housing assistance for:

(i) Extremely low-income, low-income, moderate-income, and middle-income families;

(ii) Renters and owners;

(iii) Elderly persons;

(iv) Single persons;

(v) Large families;

(vi) Public housing residents;

(vii) Families on the public housing and Section 8 tenant-based waiting list;

(viii) Persons with HIV/AIDS and their families;

(ix) Victims of domestic violence, dating violence, sexual assault, and stalking;

(x) Persons with disabilities; and

(xi) Formerly homeless families and individuals who are receiving rapid re-housing assistance and are nearing the termination of that assistance.

(2) The description of housing needs shall include a concise summary of the cost burden and severe cost burden, overcrowding (especially for large families), and substandard housing conditions being experienced by extremely low-income, low-income, moderate-income, and middle-income renters and owners compared to the jurisdiction as a whole. (The jurisdiction must define in its consolidated plan the terms ''standard condition'' and ''substandard condition but suitable for rehabilitation.'')

* * * * *

§ 91.215 [Amended]

■ 13. Amend § 91.215 by removing paragraph (a)(5).

■ 14. In § 91.220 revise paragraph (k)(1) to read as follows:

§ 91.220 Action plan.

* * * * *

(k) * * *

(1) *Affirmatively furthering fair housing.* Actions it plans to take during the next year that further the commitments identified in the jurisdiction's certification to affirmatively further fair housing.

* * * * *

■ 15. In § 91.225 revise paragraph (a)(1) to read as follows:

§ 91.225 Certifications.

(a) * * *

(1) *Affirmatively furthering fair housing.* Each jurisdiction is required to submit a certification that it will affirmatively further fair housing by addressing at least three goals towards fair housing choice or obstacles to fair housing choice, identified by the jurisdiction, that the jurisdiction intends to achieve or ameliorate, respectively. The identified goals or obstacles must have concrete and measurable outcomes or changes.

(i) Jurisdictions must include with each goal or obstacle a brief description of how accomplishing the goal or ameliorating the obstacle affirmatively furthers fair housing in that jurisdiction, unless the obstacle is an obstacle to fair housing choice identified from the following non-exhaustive list of obstacles which HUD considers to be inherent barriers to fair housing choice:

(A) Lack of a sufficient supply of decent, safe, and sanitary housing that is affordable.

(B) Lack of a sufficient supply of decent, safe, and sanitary housing that is affordable and accessible to people with disabilities.

(C) Concentration of substandard housing stock in a particular area.

(D) Not in derogation of applicable federal law or regulations, inflexible or unduly rigorous design standards or other similar barriers which unreasonably increase the cost of the construction or rehabilitation of low-to-mid price housing or impede the development or implementation of innovative approaches to housing.

(E) Lack of effective, timely, and cost-effective means for clearing title issues, if such are prevalent in the community.

(F) Source of income restrictions on rental housing.

(G) administrative procedures which have the effect of restricting or otherwise materially impeding the approval of affordable housing development

(H) High rates of housing-related lead poisoning in housing.

(I) Artificial economic restrictions on the long-term creation of rental housing, such as certain types of rent control.

(J) Unduly prescriptive or burdensome building and rehabilitation codes.

(K) Arbitrary or excessive energy and water efficiency mandates.

(L) Unduly burdensome wetland or environmental regulations.

(M) Unnecessary manufactured-housing regulations and restrictions.

(N) Cumbersome or time-consuming construction or rehabilitation permitting and review procedures.

(O) Tax policies which discourage investment or reinvestment.

(P) Arbitrary or unnecessary labor requirements.

(ii) Jurisdictions should focus on goals or obstacles within their control or partial control. If, in addition to identifying obstacles within the jurisdiction's control or partial control, a jurisdiction identifies obstacles to fair housing choice not within its control or partial control, but which the jurisdiction determines deserve public or HUD scrutiny, the certification may also discuss those issues and include suggested solutions to address the obstacles.

(iii) The goals or obstacles included in the certification are to be determined by the jurisdiction, and the specific steps

for the jurisdiction to take are to be informed by the nature of the jurisdiction, its geographic scope, its size, and its financial, technical, and managerial resources, and taking into consideration relevant public comments. The contents of the certification need not be based on any HUD-prescribed specific analysis or data but should reflect the practical experience and local insights of the jurisdiction, including objective quantitative and qualitative data as the jurisdiction deems appropriate.

(iv) Following the procedures in § 91.500, HUD may question the accuracy of the certifications of low-ranking jurisdictions, as defined in 24 CFR 5.155(d)(1). Jurisdictions may be asked to amend their certifications to commit the jurisdiction to goals that have a rational basis toward favorably affecting the metrics in 24 CFR 5.155(c).

* * * * *

■ 16. Revise § 91.230 to read as follows:

§ 91.230 Monitoring.

The plan must describe the standards and procedures that the jurisdiction will use to monitor activities carried out in furtherance of the plan, including strategies and actions that address the fair housing issues and goals identified in the jurisdiction's certification to affirmatively further fair housing, and that the jurisdiction will use to ensure long-term compliance with requirements of the programs involved, including civil rights related program requirements, minority business outreach, and the comprehensive planning requirements.

■ 17. In § 91.235 revise paragraphs (c)(1) and (4) to read as follows:

§ 91.235 Special case; abbreviated consolidated plan.

* * * * *

(c) * * *

(1) *Assessment of needs, resources, and planned activities.* An abbreviated plan must contain sufficient information about needs, resources, and planned activities to address the needs to cover the type and amount of assistance anticipated to be funded by HUD. The plan must describe how the jurisdiction will affirmatively further fair housing in accordance with its certification to affirmatively further fair housing.

* * * * *

(4) *Submissions, certifications, amendments, and performance reports.* An Insular Area grantee that submits an abbreviated consolidated plan under this section must comply with the submission, certification, amendment, and performance report requirements of 24 CFR 570.440. This includes certification that the grantee will affirmatively further fair housing, which means that it will take meaningful actions to further the goals identified in the certification to affirmatively further fair housing.

* * * * *

■ 18. In § 91.305 revise paragraph (b) to read as follows:

§ 91.305 Housing and homeless needs assessment.

* * * * *

(b) *Categories of persons affected.* (1) The plan shall estimate the number and type of families in need of housing assistance for:

(i) Extremely low-income, low-income, moderate-income, and middle-income families;

(ii) Renters and owners;

(iii) Elderly persons;

(iv) Single persons;

(v) Large families;

(vi) Public housing residents;

(vii) Families on the public housing and Section 8 tenant-based waiting list;

(viii) Persons with HIV/AIDS and their families;

(ix) Victims of domestic violence, dating violence, sexual assault, and stalking;

(x) Persons with disabilities; and

(xi) Formerly homeless families and individuals who are receiving rapid re-housing assistance and are nearing the termination of that assistance.

(2) The description of housing needs shall include a concise summary of the cost burden and severe cost burden, overcrowding (especially for large families), and substandard housing conditions being experienced by extremely low-income, low-income, moderate-income, and middle-income renters and owners compared to the state as a whole. (The state must define in its consolidated plan the terms ''standard condition'' and ''substandard condition but suitable for rehabilitation.'')

* * * * *

§ 91.315 [Amended]

■ 19. Amend § 91.315 by removing paragraph (a)(5).

■ 20. In § 91.320 revise paragraph (j)(1) to read as follows:

§ 91.320 Action plan.

* * * * *

(j) * * *

(1) *Affirmatively furthering fair housing.* Actions it plans to take during the next year that further the commitments in its certification to affirmatively further fair housing.

* * * * *

■ 21. In § 91.325 revise paragraph (a)(1) to read as follows:

§ 91.325 Certifications.

(a) * * *

(1) *Affirmatively furthering fair housing.* Each State is required to submit a certification that it will affirmatively further fair housing by addressing at least three goals towards fair housing choice or obstacles to fair housing choice, identified by the jurisdiction, that the jurisdiction intends to achieve or ameliorate, respectively. The identified goals or obstacles must have concrete and measurable outcomes or changes.

(i) States must include with each goal or obstacle a brief description of how accomplishing the goal or ameliorating the obstacle affirmatively furthers fair housing in that State, unless the obstacle is an obstacle to fair housing choice identified from the following non-exhaustive list of obstacles which HUD considers to be inherent barriers to fair housing choice:

(A) Lack of a sufficient supply of decent, safe, and sanitary housing that is affordable.

(B) Lack of a sufficient supply of decent, safe, and sanitary housing that is affordable and accessible to people with disabilities.

(C) Concentration of substandard housing stock in a particular area.

(D) Not in derogation of applicable federal law or regulations, inflexible or unduly rigorous design standards or other similar barriers which unreasonably increase the cost of the construction or rehabilitation of low-to-mid price housing or impede the development or implementation of innovative approaches to housing.

(E) Lack of effective, timely, and cost-effective means for clearing title issues, if such are prevalent in the community.

(F) Source of income restrictions on rental housing.

(G) Regulatory provisions or other administrative practices that have the effect of restricting or otherwise materially impeding the approval of affordable housing development.

(H) High rates of housing-related lead poisoning in housing.

(I) Artificial economic restrictions on the long-term creation of rental housing, such as rent controls.

(J) Unduly prescriptive or burdensome building and rehabilitation codes.

(K) Arbitrary or excessive energy and water efficiency mandates.

(L) Unduly burdensome wetland or environmental regulations.

(M) Unnecessary manufactured-housing regulations and restrictions.

(N) Cumbersome or time-consuming construction or rehabilitation permitting and review procedures.

(O) Tax policies which discourage investment or reinvestment.

(P) Arbitrary or unnecessary labor requirements.

(ii) States should focus on goals or obstacles within their control or partial control. If, in addition to identifying obstacles within the State's control or partial control, a State identifies obstacles to fair housing choice not within its control or partial control, but which the State determines deserve public or HUD scrutiny, the certification may also discuss those issues and include suggested solutions to address the obstacles.

(iii) The goals or obstacles included in the certification are to be determined by the State, and the specific steps for the State to take are to be informed by the nature of the State, its geographic scope, its size, and its financial, technical, and managerial resources, taking into consideration relevant public comments. The contents of the certification need not be based on any HUD-prescribed specific mode of analysis or data but should reflect the practical experience and local insights of the State, including quantitative and qualitative data as the jurisdiction deems appropriate.

(iv) Following the procedures in § 91.500, HUD may question the accuracy of the certifications of low-ranking States, as defined in 24 CFR 5.155(d)(1). States may be asked to amend their certifications to commit the jurisdiction to goals that have a rational basis toward favorably affecting the metrics in 24 CFR 5.155(c).

* * * * *

■ 22. Revise § 91.415 to read as follows:

§ 91.415 Strategic plan.

Strategies and priority needs must be described in the consolidated plan, in accordance with the provisions of § 91.215, for the entire consortium. The consortium is not required to submit a nonhousing Community Development Plan; however, if the consortium includes CDBG entitlement communities, the consolidated plan must include the nonhousing Community Development Plans of the CDBG entitlement community members of the consortium. The consortium must set forth its priorities for allocating housing (including CDBG and ESG, where applicable) resources geographically within the consortium, describing how the consolidated plan will address the needs identified (in accordance with § 91.405), describing the reasons for the consortium's allocation priorities, and identifying any obstacles there are to addressing underserved needs.

■ 23. In § 91.420 revise paragraph (b) to read as follows:

§ 91.420 Action plan.

* * * * *

(b) *Description of resources and activities.* The action plan must describe the resources to be used and activities to be undertaken to pursue its strategic plan, including actions the consortium plans to take during the next year that further the commitments in the consortium's certification to affirmatively further fair housing. The consolidated plan must provide this description for all resources and activities within the entire consortium as a whole, as well as a description for each individual community that is a member of the consortium.

* * * * *

■ 24. In § 91.425 revise paragraph (a)(1) to read as follows:

§ 91.425 Certifications.

(a) * * *

(1) *General*—(i) *Affirmatively furthering fair housing.* Each consortium must certify that it will affirmatively further fair housing by addressing at least three goals towards fair housing choice or obstacles to fair housing choice, identified by the consortium, the consortium intends to achieve or ameliorate. The identified goals or obstacles must have concrete and measurable outcomes or changes.

(A) Consortia must include with each goal or obstacle a brief description of how accomplishing the goal or ameliorating the obstacle affirmatively furthers fair housing in the consortia's jurisdiction, unless the obstacle is an obstacle to fair housing choice identified from the following non-exhaustive list of obstacles which HUD considers to be inherent barriers to fair housing choice:

(*1*) Lack of a sufficient supply of decent, safe, and sanitary housing that is affordable.

(*2*) Lack of a sufficient supply of decent, safe, and sanitary housing that is affordable and accessible to people with disabilities.

(*3*) Concentration of substandard housing stock in a particular area.

(*4*) Not in derogation of applicable federal law or regulations, inflexible or unduly rigorous design standards or other similar barriers which unreasonably increase the cost of the construction or rehabilitation of low-to-mid price housing or impede the development or implementation of innovative approaches to housing.

(*5*) Lack of effective, timely, and cost-effective means for clearing title issues, if such are prevalent in the community.

(*6*) Source of income restrictions on rental housing.

(*7*) Administrative procedures that have the effect of restricting or otherwise materially impeding the approval of affordable housing development.

(*8*) High rates of housing-related lead poisoning in housing.

(*9*) Artificial economic restrictions on the long-term creation of rental housing, such as rent controls.

(*10*) Unduly prescriptive or burdensome building and rehabilitation codes.

(*11*) Arbitrary or excessive energy and water efficiency mandates.

(*12*) Unduly burdensome wetland or environmental regulations.

(*13*) Unnecessary manufactured-housing regulations and restrictions.

(*14*) Cumbersome or time-consuming construction or rehabilitation permitting and review procedures.

(*15*) Tax policies which discourage investment or reinvestment.

(*16*) Arbitrary or unnecessary labor requirements.

(B) Consortia should focus on goals or obstacles within their control or partial control. If, in addition to identifying obstacles within the consortium's control or partial control, a consortium identifies obstacles to fair housing choice not within its control or partial control, but which the consortium determines deserve public or HUD scrutiny, the certification may also discuss those issues and include suggested solutions to address the obstacles.

(C) The goals or obstacles included in the certification are to be determined by the consortium, and the specific steps for the consortium to take are to be informed by the nature of the consortium, its geographic scope, its size, and its financial, technical, and managerial resources, taking into consideration relevant public comments. The contents of the certification need not be based on any HUD-prescribed specific mode of analysis or data but should reflect the practical experience and local insights of the consortium, including quantitative and qualitative data as the jurisdiction deems appropriate.

(D) Following the procedures in § 91.500, HUD may question the accuracy of the certifications of low-ranking consortia, as defined in 24 CFR 5.155(d)(1). Consortia may be asked to amend their certifications to commit the consortium to goals that have a rational basis toward favorably affecting the metrics in 24 CFR 5.155(c).

* * * * *

■ 25. In § 91.520, revise the introductory text in paragraphs (a) and (i) to read as follows:

§ 91.520 Performance reports.

(a) *General.* Each jurisdiction that has an approved consolidated plan shall annually review and report, in a form prescribed by HUD, on the progress it has made in carrying out its strategic plan and its action plan. The performance report must include a description of the resources made available, the investment of available resources, the geographic distribution and location of investments, the families and persons assisted (including the racial and ethnic status of persons assisted), actions taken pursuant to the jurisdiction's certification to affirmatively further fair housing and any measurable results of those actions, and other actions indicated in the strategic plan and the action plan. This performance report shall be submitted to HUD within 90 days after the close of the jurisdiction's program year.

* * * * *

(i) *Evaluation by HUD.* (1) HUD shall review the performance report and determine whether it is satisfactory. If a satisfactory report is not submitted in a timely manner, HUD may suspend funding until a satisfactory report is submitted, or may withdraw and reallocate funding if HUD determines, after notice and opportunity for a hearing, that the jurisdiction will not submit a satisfactory report.

(2) With the steps the jurisdiction has taken to affirmatively further fair housing, HUD will deem that portion of the performance report ''satisfactory'' if the steps the jurisdiction has taken are rationally related to the goals or obstacles identified in the jurisdiction's certification to affirmatively further fair housing.

* * * * *

■ 26. Amend § 91.525 paragraph (a) by redesignating paragraph (5) as paragraph (6) and adding a new paragraph (5) to read as follows:

§ 91.525 Performance review by HUD.

(a) * * *

(5) Extent to which the jurisdiction made progress towards the goals or obstacles identified in the jurisdiction's certification to affirmatively further fair housing; and

* * * * *

PART 92—HOME INVESTMENT PARTNERSHIPS PROGRAM

■ 27. The authority citation for part 92 continues to read as follows:

Authority: 42 U.S.C. 3535(d), 12 U.S.C. 1701x and 4568.

■ 28. Revise § 92.104 to read as follows:

§ 92.104 Submission of a consolidated plan.

A jurisdiction that has not submitted a consolidated plan to HUD must submit to HUD, not later than 90 calendar days after providing notification under § 92.103, a consolidated plan in accordance with 24 CFR part 91.

■ 29. In § 92.508 revise paragraph (a)(7)(i)(C) to read as follows:

§ 92.508 Recordkeeping.

(a) * * *

(7) * * *

(i) * * *

(C) Documentation of the actions the participating jurisdiction has taken to affirmatively further fair housing, including documentation related to the participating jurisdiction's certification to affirmatively further fair housing as described in 24 CFR part 91.

* * * * *

PART 570—COMMUNITY DEVELOPMENT BLOCK GRANTS

■ 30. The authority citation for part 570 continues to read as follows:

Authority: 12 U.S.C. 1701x, 1701 x–1; 42 U.S.C. 3535(d) and 5301–5320.

■ 31. In § 570.3 revise the first sentence of the introductory text to read as follows:

§ 570.3 Definitions.

The terms Affirmatively Furthering Fair Housing, HUD, and Secretary are defined in 24 CFR part 5. * * *

* * * * *

§ 570.205 [Amended]

■ 32. Amend § 570.205 paragraph (a)(4) by removing paragraph (vii) and redesignating paragraph (viii) as (vii).

■ 33. In § 570.441 revise introductory text in paragraphs (b) and (3) to read as follows:

§ 570.441 Citizen participation—insular areas.

* * * * *

(b) *Citizen participation plan.* The insular area jurisdiction must develop and follow a detailed citizen participation plan and must make the plan public. The plan must be completed and available before the statement for assistance is submitted to HUD, and the jurisdiction must certify that it is following the plan. The plan must set forth the jurisdiction's policies and procedures for:

* * * * *

(3) Holding a minimum of two public hearings for the purpose of obtaining residents' views and formulating or responding to proposals and questions. Each public hearing must be conducted at a different stage of the CDBG program year. Together, the hearings must address affirmatively furthering fair housing, community development and housing needs, development of proposed activities, proposed strategies and actions furthering the commitments in the certification to affirmatively further fair housing, and a review of program performance. There must be reasonable notice of the hearings, and the hearings must be held at times and accessible locations convenient to potential or actual beneficiaries, with reasonable accommodations, including materials in accessible formats, for persons with disabilities. The jurisdiction must specify in its citizen participation plan how it will meet the requirement for hearings at times and accessible locations convenient to potential or actual beneficiaries;

* * * * *

■ 34. In § 570.487 revise paragraph (b) to read as follows:

§ 570.487 Other applicable laws and related program requirements.

* * * * *

(b) *Affirmatively furthering fair housing.* The Act requires the State to certify to the satisfaction of HUD that it will affirmatively further fair housing. The Act also requires each unit of general local government to certify that it will affirmatively further fair housing. The certification that the State will affirmatively further fair housing shall specifically require the State to assume the responsibility of fair housing planning by:

(1) Taking meaningful actions to further the goals identified in the jurisdiction's or State's Strategic plan under 24 CFR part 91; and

(2) Assuring that units of local government funded by the State comply with their certifications to affirmatively further fair housing.

* * * * *

■ 35. In § 570.490, revise paragraphs (a)(1) and (b) to read as follows:

§ 570.490 Recordkeeping requirements.

(a) * * * (1) The State shall establish and maintain such records as may be necessary to facilitate review and audit by HUD of the State's administration of CDBG funds under § 570.493. The content of records maintained by the State shall be as jointly agreed upon by HUD and the States and sufficient to enable HUD to make the determinations described at § 570.493. For fair housing

and equal opportunity purposes, and as applicable, such records shall include documentation related to the State's certification to affirmatively further fair housing, as described in 24 CFR part 91. The records shall also permit audit of the States in accordance with 24 CFR part 85.

* * * * *

(b) *Unit of general local government's record.* The State shall establish recordkeeping requirements for units of general local government receiving CDBG funds that are sufficient to facilitate reviews and audits of such units of general local government under §§ 570.492 and 570.493. For fair housing and equal opportunity purposes, and as applicable, such records shall include documentation related to the State's certification to affirmatively further fair housing under 24 CFR part 91.

* * * * *

■ 36. In § 570.506 revise paragraph (g)(1) to read as follows:

§ 570.506 Records to be maintained.

* * * * *

(g) * * *

(1) Documentation related to the recipient's certification to affirmatively further fair housing under 24 CFR part 91.

* * * * *

■ 37. In § 570.601 revise paragraph (a)(2) to read as follows:

§ 570.601 Public Law 88–352 and Public Law 90–284; affirmatively furthering fair housing; Executive Order 11063.

(a) * * *

(2) Public Law 90–284, which is the Fair Housing Act (42 U.S.C. 3601–3620). In accordance with the Fair Housing Act, the Secretary requires that grantees administer all programs and activities related to housing and urban development in a manner to affirmatively further the policies of the Fair Housing Act. Furthermore, in accordance with section 104(b)(2) of the Act, for each community receiving a grant under subpart D of this part, the certification that the grantee will affirmatively further fair housing shall specifically require the grantee to take meaningful actions to further the goals identified in the grantee's certification to affirmatively further fair housing under 24 CFR part 91.

* * * * *

PART 574—HOUSING OPPORTUNITIES FOR PERSONS WITH AIDS

■ 38. The authority citation for part 574 continues to read as follows:

Authority: 12 U.S.C. 1701x, 1701 x–1; 42 U.S.C. 3535(d) and 5301–5320.

■ 39. In § 574.530 revise paragraph (b) to read as follows:

§ 574.530 Recordkeeping.

* * * * *

(b) Documentation related to the formula grantee's certification to affirmatively further fair housing under 24 CFR part 91.

* * * * *

PART 576—EMERGENCY SOLUTIONS GRANTS PROGRAM

■ 40. The authority citation for part 576 continues to read as follows:

Authority: 12 U.S.C. 1701x, 1701 x–1; 42 U.S.C. 11371 *et seq.,* 42 U.S.C. 3535(d).

■ 41. In § 576.500 revise paragraph (s)(1)(ii) to read as follows:

§ 576.500 Recordkeeping and reporting requirements.

* * * * *

(s) * * *

(1) * * *

(ii) Documentation in regard to the recipient's certification that the recipient will affirmatively further fair housing.

* * * * *

PART 903—PUBLIC HOUSING AGENCY PLANS

■ 42. The authority citation for part 903 continues to read as follows:

Authority: 42 U.S.C. 1437c; 42 U.S.C. 1437c–1; Pub. L. 110–289; 42 U.S.C. 3535d.

■ 43. In § 903.7 revise paragraphs (o)(1) and (3) to read as follows:

§ 903.7 What information must a PHA provide in the Annual Plan?

* * * * *

(o) * * *

(1) The PHA must certify that it has consulted with the local jurisdiction on how to satisfy their obligations in common to affirmatively further fair housing, and that it will carry out its plan in conformity with title VI of the Civil Rights Act of 1964 (42 U.S.C. 2000d–2000d–4), the Fair Housing Act (42 U.S.C. 3601–19), section 504 of the Rehabilitation Act of 1973 (29 U.S.C. 794), title II of the Americans with Disabilities Act of 1990 (42 U.S.C. 12101 *et seq.*), and other applicable Federal civil right laws, and that it will affirmatively further fair housing in its programs and in areas under its direct control.

* * * * *

(3) If the PHA has been subject to an unresolved HUD letter of finding or a material finding of a civil rights violation by a court or administrative law judge in an action brought by or on behalf of HUD or by the United States Department of Justice in the last two years that has not been successfully appealed or otherwise set aside at the time of the submission of the certification, then the PHA must include with its certification an explanation of what steps the PHA has taken and is taking to resolve the violation.

* * * * *

■ 44. Revise § 903.15 to read as follows:

§ 903.15 What is the relationship of the public housing agency plans to the Consolidated Plan and a PHA's Fair Housing Requirements?

A PHA is obligated to affirmatively further fair housing, as contemplated in § 903.7(o). All admission and occupancy policies for public housing and Section 8 tenant-based housing programs must comply with Fair Housing Act requirements and other civil rights laws and regulations and with a PHA's plans to affirmatively further fair housing. The PHA may not impose any specific income or racial quotas for any development or developments.

(a) *Nondiscrimination.* A PHA must carry out its PHA Plan in conformity with the nondiscrimination requirements in Federal civil rights laws, including title VI of the Civil Rights Act of 1964, section 504 of the Rehabilitation Act of 1973, the Americans with Disabilities Act, and the Fair Housing Act. A PHA may not assign housing to persons in a particular section of a community or to a development or building based on race, color, religion, sex, disability, familial status, or national origin for purposes of segregating populations.

(b) *Affirmatively Furthering Fair Housing.* A PHA's policies should be designed in conformity with any applicable certification to affirmatively further fair housing as part of a consolidated plan under 24 CFR part 91 and the PHA's assessment of its fair housing needs.

(1) The Fair Housing Act provides that PHAs must certify that they will affirmatively further fair housing. PHAs must affirmatively further fair housing as detailed in § 903.7(o).

(2) Such affirmative steps may include, but are not limited to, marketing efforts, engagement with landlords to promote the acceptance of housing choice vouchers, use of nondiscriminatory tenant selection and assignment policies that lead to increased fair housing choice, additional applicant consultation and information, provision of additional supportive services and amenities to a

development (such as supportive services that enable an individual with a disability to transfer from an institutional setting into the community), and engagement in ongoing coordination with state and local aging and disability community and community-based organizations to provide additional community-based housing opportunities for individuals with disabilities and to connect such individuals with supportive services to enable an individual with a disability to transfer from an institutional setting into the community and facilitate the provision of such services at PHA properties.

(c) *Validity of certification.* (1) A PHA's certification under § 903.7(o) will be subject to challenge by HUD where it appears that a PHA fails to meet the requirements in 24 CFR 903.7(o).

(2) If HUD challenges the validity of a PHA's certification, HUD will do so in writing specifying the deficiencies, and will give the PHA an opportunity to respond to the particular challenge in writing. In responding to the specified deficiencies, a PHA must establish, as applicable, that it has complied with fair housing and civil rights laws and regulations, or has remedied violations of fair housing and civil rights laws and regulations, and has adopted policies and undertaken actions to affirmatively further fair housing, including, but not limited to, providing a full range of housing opportunities to applicants and tenants and taking affirmative steps as described in paragraph (d)(2) of this section in a nondiscriminatory manner. In responding to the PHA, HUD may accept the PHA's explanation and withdraw the challenge, undertake further investigation, or pursue other remedies available under law. HUD will seek to obtain voluntary corrective action consistent with the specified deficiencies. In determining whether a PHA has complied with its certification, HUD will review the PHA's circumstances relevant to the specified deficiencies, including characteristics of the population served by the PHA; characteristics of the PHA's existing housing stock; and decisions, plans, goals, priorities, strategies, and actions of the PHA, including those designed to affirmatively further fair housing.

■ 45. In § 903.23 revise paragraph (f) to read as follows;

§ 903.23 What is the process by which HUD reviews, approves, or disapproves an Annual Plan?

* * * * *

(f) *Recordkeeping.* PHAs must maintain records reflecting actions to affirmatively further fair housing, as described in § 903.7(o).

PART 905—THE PUBLIC HOUSING CAPITAL FUND PROGRAM

■ 46. The authority citation for part 905 continues to read as follows:

Authority: 42 U.S.C. 1437g, 42 U.S.C. 1437z–2, 42 U.S.C. 1437z–7, and 3535(d).

■ 47. In § 905.308 revise paragraph (b)(1) to read as follows:

§ 905.308 Federal requirements applicable to all Capital Fund activities.

* * * * *

(b) * * *

(1) *Nondiscrimination and equal opportunity.* The PHA shall comply with all applicable nondiscrimination and equal opportunity requirements, including, but not limited to, the Department's generally applicable nondiscrimination and equal opportunity requirements at 24 CFR 5.105(a) and the Architectural Barriers Act of 1968 (42 U.S.C. 4151 *et seq.*), and its implementing regulations at 24 CFR parts 40 and 41. The PHA shall affirmatively further fair housing in its use of funds under this part, following the requirements at 24 CFR 903.7(o).

* * * * *

Dated: January 6, 2020.

Benjamin S. Carson, Sr.,

Secretary.

[FR Doc. 2020–00234 Filed 1–13–20; 8:45 am]

BILLING CODE 4210–67–P

DEPARTMENT OF THE TREASURY

Internal Revenue Service

26 CFR Part 1

[REG–125710–18]

RIN 1545–BP07

Revised Applicability Dates for Regulations Under Section 382(h) Related to Built-in Gain and Loss

AGENCY: Internal Revenue Service (IRS), Treasury.

ACTION: Partial withdrawal of notice of proposed rulemaking; notice of proposed rulemaking.

SUMMARY: This document withdraws a portion of a notice of proposed rulemaking published in the Proposed Rules section of the **Federal Register** on September 10, 2019. That notice of proposed rulemaking contained proposed rules to provide guidance regarding the items of income and deduction that are included in the calculation of built-in gains and losses under section 382 of the Internal Revenue Code (Code). If adopted, those proposed rules would apply to any ownership change occurring after the date the Treasury decision adopting those proposed rules as a final regulation is published in the **Federal Register**. This notice of proposed rulemaking would delay the applicability of those proposed rules and provide transition relief for eligible taxpayers. The proposed regulations in this notice of proposed rulemaking would affect corporations that experience an ownership change for purposes of section 382.

DATES: Written or electronic comments must be received by *March 16, 2020.* Written or electronic requests for a public hearing and outlines of topics to be discussed at the public hearing must be received by *March 16, 2020.*

ADDRESSES: Submit electronic submissions via the Federal eRulemaking Portal at *www.regulations.gov* (indicate IRS and REG–125710–18) by following the online instructions for submitting comments. Once submitted to the Federal eRulemaking Portal, comments cannot be edited or withdrawn. The Department of the Treasury (Treasury Department) and the IRS will publish for public availability any comment received to its public docket, whether submitted electronically or in hard copy. Send hard copy submissions to: Internal Revenue Service, CC:PA:LPD:PR (REG–125710–18), Room 5203, Post Office Box 7604, Ben Franklin Station, Washington, DC 20044.

FOR FURTHER INFORMATION CONTACT: Concerning the proposed regulations, Jonathan R. Neuville at (202) 317–5363; concerning submissions of comments or requests for a public hearing, Regina L. Johnson at (202) 317–6901 (not toll-free numbers).

SUPPLEMENTARY INFORMATION:

Background

On September 10, 2019, the Treasury Department and the IRS published in the **Federal Register** (84 FR 47455) a notice of proposed rulemaking (REG–125710–18) proposing revisions to the rules in §§ 1.382–2 and 1.382–7 (September 2019 proposed regulations). These rules would affect the determination of net built-in gains and losses and recognized built-in gains and losses under section 382(h) that, in turn, affect the limitation under section 382 on net operating losses and disallowed business interest expense under section 163(j).

Proposed §§ 1.382–2(b)(4) and 1.382–7(g)(1), as set forth in the September 2019 proposed regulations, provided that the September 2019 proposed regulations would apply to ownership changes that occur after the date the Treasury decision adopting the September 2019 proposed regulations as final regulations is published in the **Federal Register**. As noted in part II of the Background in the September 2019 proposed regulations, section V of Notice 2003–65 (2003–2 C.B. 747) provides that taxpayers may rely on either of two safe harbor approaches for applying section 382(h) to an ownership change ''prior to the effective date of temporary or final regulations under section 382(h).''

Taxpayers and practitioners have expressed concern that the applicability date set forth in the September 2019 proposed regulations would impose a significant burden on taxpayers evaluating and negotiating business transactions, due to their uncertainty regarding when those transactions will close and when the September 2019 proposed regulations will be finalized. As a result, taxpayers and practitioners have requested transition relief with regard to ownership changes caused by pending transactions. In connection with this request, taxpayers and practitioners also have expressed concern that transition relief limited to transactions for which a binding agreement is in effect on or before the applicability date of final regulations would be inadequate, because pending transactions regularly are modified or delayed prior to closing.

As explained more fully in the Explanation of Provisions, this notice of proposed rulemaking modifies the applicability dates for the September 2019 proposed regulations by withdrawing the text of proposed §§ 1.382–2(b)(4) and 1.382–7(g), as set forth in the September 2019 proposed regulations, and proposing revised applicability dates.

Explanation of Provisions

I. Delay of Applicability Date and Applicability of Pre-Existing Guidance

To address the concerns raised by taxpayers and practitioners, the Treasury Department and the IRS are withdrawing the text of proposed §§ 1.382–2(b)(4) and 1.382–7(g) contained in the September 2019 proposed regulations. In its place, the Treasury Department and the IRS are proposing the revised applicability date text set forth in proposed §§ 1.382–2(b)(4) and 1.382–7(g) as contained in this notice of proposed rulemaking.

The Treasury Department and the IRS do not intend there to be any gap between the date on which taxpayers can no longer rely on Notice 2003–65 and the date on which the final regulations are applicable. Other than in the case of the two exceptions described in parts II and III of this Explanation of Provisions, the applicability date of the final regulations will be 30 days after the date the Treasury decision containing such regulations is published in the **Federal Register** (delayed applicability date). As provided in this proposed regulation, Notice 2003–65 will remain applicable to ownership changes to which the final regulations do not apply.

II. Limiting Duplicative Application of Section 382

The first exception to the delayed applicability date relates to the rule in proposed § 1.382–7(d)(5), which provides that certain carryforwards of business interest expense disallowed under section 163(j) would not be treated as recognized built-in losses under section 382(h)(6)(B) if such amounts were allowable as deductions during the five-year recognition period set forth in section 382(h)(7)(A). This rule eliminates the possible duplicative application of section 382 to certain disallowed business interest expense carryforwards. Due to the noncontroversial nature of this rule, the Treasury Department and the IRS have determined that proposed § 1.382–7(d)(5) should be finalized before the remainder of the rules in the September 2019 proposed regulations, and that taxpayers should be allowed to retroactively apply this rule. To that end, the Treasury Department and IRS expect that proposed § 1.382–7(d)(5) will be finalized as part of the Treasury decision that finalizes the proposed section 163(j) regulations (see 83 FR 67490) and taxpayers will be permitted to apply the rule to prior periods. The Treasury Department and the IRS continue to actively study the remainder of the rules in the September 2019 proposed regulations.

III. Transition Relief Provisions

Under the transition relief provisions proposed in this notice of proposed rulemaking, the final regulations would not apply to certain ownership changes that occur after the delayed applicability date. As discussed in part I of this Explanation of Provisions, the delayed applicability date will be 30 days after the date these regulations are published in the **Federal Register**. In order for an ownership change after the delayed applicability date to qualify for transition relief, the ownership change must occur immediately after an owner shift or equity structure shift that occurs:

(1) Pursuant to a binding agreement in effect on or before the delayed applicability date and at all times thereafter;

(2) Pursuant to a specific transaction described in a public announcement made on or before the delayed applicability date;

(3) Pursuant to a specific transaction described in a filing with the Securities and Exchange Commission submitted on or before the delayed applicability date;

(4) By order of a court (or pursuant to a plan confirmed, or a sale approved, by order of a court) in a title 11 or similar case (as defined in section 382(l)(5)(F)), provided that the taxpayer was a debtor in a case before such court on or before the delayed applicability date; or

(5) Pursuant to a transaction described in a private letter ruling request submitted to the IRS on or before the delayed applicability date.

The relevant owner shift or equity structure shift must be a specific, identifiable transaction. For example, a stock buyback pursuant to an announced, on-going program would not qualify.

Taxpayers may continue to rely on Notice 2003–65 with respect to any ownership change qualifying for transition relief, even though the Notice will be obsoleted on the delayed applicability date. However, a taxpayer may choose to apply the final regulations to such an ownership change.

Special Analyses

These proposed regulations are not subject to review under section 6(b) of Executive Order 12866 pursuant to the Memorandum of Agreement (April 11, 2018) between the Treasury Department and the Office of Management and Budget regarding review of tax regulations.

Pursuant to the Regulatory Flexibility Act (RFA), 5 U.S.C. chapter 6, the Treasury Department and the IRS hereby certify that these proposed regulations will not have a significant economic impact on a substantial number of small entities. This proposed rule is limited to revising the proposed applicability date of proposed regulations under section 382(h) of the Internal Revenue Code that were published in the **Federal Register** (84 FR 47455) on September 10, 2019. Based on the narrow scope of corporate transactions covered by the proposed regulations' delayed applicability rules,

the Treasury Department and the IRS have determined that these proposed regulations are unlikely to affect a substantial number of small entities and are unlikely to have a significant economic impact on any small entities affected.

The Treasury Department and the IRS invite comments on any impact that these regulations would have on small entities.

Pursuant to section 7805(f), this notice of proposed rulemaking has been submitted to the Chief Counsel for Advocacy of the Small Business Administration for comment on its impact on small business.

Comments and Requests for Public Hearing

The Treasury Department and the IRS appreciate the comments that taxpayers and practitioners already have provided regarding the September 2019 proposed regulations and encourage taxpayers and practitioners to provide comments on the proposed regulations contained in this notice of proposed rulemaking. In particular, the Treasury Department and the IRS request comments on whether taxpayers should be permitted to apply the final regulations to ownership changes occurring before the applicability date and what restrictions, if any, should be placed on such retroactive application.

Before these proposed regulations are adopted as final regulations, consideration will be given to any comments that are submitted timely to the Treasury Department and the IRS as prescribed in this preamble under the **ADDRESSES** heading. All comments will be available at *http://www.regulations.gov* or upon request. A public hearing will be scheduled if requested in writing by any person that timely submits written comments. If a public hearing is scheduled, notice of the date, time, and place of the public hearing will be published in the **Federal Register.**

Statement of Availability of IRS Documents

Notice 2003–65 is published in the Internal Revenue Bulletin (or Cumulative Bulletin) and is available from the Superintendent of Documents, U.S. Government Publishing Office, Washington, DC 20402, or by visiting the IRS website at *http://www.irs.gov.*

Drafting Information

The principal authors of this notice of proposed rulemaking are Jonathan R. Neuville of the Office of Associate Chief Counsel (Corporate) and Kevin M. Jacobs, formerly of the Office of Associate Chief Counsel (Corporate). However, other personnel from the Treasury Department and the IRS participated in their development.

List of Subjects in 26 CFR Part 1

Income taxes, Reporting and recordkeeping requirements.

Partial Withdrawal of Notice of Proposed Rulemaking

Accordingly, under the authority of 26 U.S.C. 382(h)(3)(B)(ii), 382(m), and 7805, §§ 1.382–2(b)(4) and 1.382–7(g) of the notice of proposed rulemaking (REG–125710–18) published in the **Federal Register** on September 10, 2019 (84 FR 47455) are withdrawn.

Proposed Amendments to the Regulations

Accordingly, 26 CFR part 1 is proposed to be amended as follows:

PART 1—INCOME TAXES

■ **Paragraph 1.** The authority citation for part 1 is amended by revising the entry for § 1.382–7 to read as follows:

Authority: 26 U.S.C. 7805 * * *

* * * * *

Section 1.382–7 also issued under 26 U.S.C. 382(h)(3)(B)(ii) and (m).

* * * * *

■ **Par. 2.** Section 1.382–1, as proposed to be revised by 84 FR 47455, September 10, 2019, is further amended by revising the entry for § 1.382–7(g) to read as follows:

§ 1.382–1 Table of Contents.

* * * * *

§ 1.382–7 Built-in gains and losses.

* * * * *

(g) Applicability dates.

(1) In general.

(2) Transition relief.

(3) Paragraph (d)(2)(vi) of this section.

* * * * *

■ **Par. 3.** Section 1.382–2, as proposed to be amended by 84 FR 47455, September 10, 2019, is further amended by revising paragraph (b)(4) to read as follows:

§ 1.382–2 General rules for ownership change.

* * * * *

(b) * * *

(4) *Rules provided in paragraphs (a)(9) through (13) of this section.* The rules of paragraphs (a)(9) through (13) of this section apply to any ownership change that occurs after the date that is 30 days after the date of publication in the **Federal Register** of a Treasury decision adopting these proposed regulations as final regulations, if § 1.382–7(g)(2) does not apply to that ownership change. Notwithstanding the preceding sentence, a taxpayer may apply the rules of paragraphs (a)(9) through (13) of this section to an ownership change to which § 1.382–7(g)(2) applies if the taxpayer applies the rules of § 1.382–7 to such ownership change.

■ **Par. 4.** Section 1.382–7, as proposed to be revised by 84 FR 47455, September 10, 2019, is further amended by revising paragraph (g) to read as follows:

§ 1.382–7 Built-in gains and losses.

* * * * *

(g) *Applicability dates*—(1) *In general.* Except as otherwise provided in this paragraph (g), this section applies to any ownership change that occurs after the date that is 30 days after the date of publication in the **Federal Register** of a Treasury decision adopting the rules of this section as final regulations (applicability date), if paragraph (g)(2) of this section does not apply to that ownership change. For ownership changes occurring on or before the applicability date and ownership changes to which paragraph (g)(2) of this section applies, see § 1.382–7 as contained in 26 CFR part 1, revised April 1, 2019, and other applicable guidance, including Notice 2003–65 (2003–2 CB 747) (see § 601.601(d)(2)(ii)(*b*) of this chapter). Notwithstanding the preceding sentences of this paragraph (g)(1), a taxpayer may apply this section to an ownership change to which paragraph (g)(2) of this section applies.

(2) *Certain ownership changes eligible for transition relief.* This paragraph (g)(2) applies to an ownership change after the applicability date that occurs immediately after an owner shift or equity structure shift, if the owner shift or equity structure shift occurs—

(i) Pursuant to a binding agreement in effect on or before the applicability date and at all times thereafter;

(ii) Pursuant to a specific transaction described in a public announcement made on or before the applicability date;

(iii) Pursuant to a specific transaction described in a filing with the Securities and Exchange Commission submitted on or before the applicability date;

(iv) By order of a court (or pursuant to a plan confirmed, or a sale approved, by order of a court) in a title 11 or similar case (as defined in section 382(l)(5)(F)), provided that the taxpayer was a debtor in a case before such court on or before the applicability date; or

(v) Pursuant to a transaction described in a ruling request submitted to the IRS on or before the applicability date.

(3) *Paragraph (d)(2)(vi) of this section.* Paragraph (d)(2)(vi) of this section applies to loss corporations that have undergone an ownership change on or after June 11, 2010. For loss corporations that have undergone an ownership change before June 11, 2010, see § 1.382–7T as contained in 26 CFR part 1, revised April 1, 2009.

Sunita Lough,

Deputy Commissioner for Services and Enforcement.

[FR Doc. 2020–00469 Filed 1–10–20; 4:15 pm]

BILLING CODE 4830–01–P

DEPARTMENT OF LABOR

Mine Safety and Health Administration

30 CFR Parts 56 and 57

[Docket No. MSHA–2019–0007]

RIN 1219–AB88

Electronic Detonators

AGENCY: Mine Safety and Health Administration, Labor.

ACTION: Proposed rule; request for comments.

SUMMARY: The Mine Safety and Health Administration (MSHA) is proposing to revise certain safety standards for explosives at metal and nonmetal (MNM) mines. This proposed rule updates existing provisions consistent with technological advancements involving electronic detonators. Elsewhere in this issue of the **Federal Register**, MSHA is also publishing a direct final rule because the Agency expects that there will be no significant adverse comments on the rule. If no significant adverse comments are received, the Agency will confirm the effective date of the final rule. If a significant adverse comment is received, MSHA will withdraw the direct final rule and proceed with this proposed rule. MSHA intends to publish a **Federal Register** notice announcing the Agency's action. This proposed rule and the companion direct final rule are substantially identical.

DATES: Comments must be received or postmarked by midnight Eastern Standard Time on March 16, 2020.

ADDRESSES: Submit comments and informational materials, identified by RIN 1219–AB88 or Docket No. MSHA–2019–0007, by one of the following methods listed below:

- *Federal E-Rulemaking Portal: http://www.regulations.gov.* Follow the on-line instructions for submitting comments.
- *Email: zzMSHA-comments@dol.gov.*
- *Mail:* MSHA, Office of Standards, Regulations, and Variances, 201 12th Street South, Suite 4E401, Arlington, Virginia 22202–5452.
- *Hand Delivery or Courier:* 201 12th Street South, Suite 4E401, Arlington, Virginia, between 9:00 a.m. and 5:00 p.m. Monday through Friday, except Federal holidays. Sign in at the receptionist's desk on the 4th Floor East, Suite 4E401.
- *Fax:* 202–693–9441.

Instructions: All submissions for the direct final rule must include RIN 1219–AB88 or Docket No. MSHA–2019–0007. MSHA posts all comments without change, including any personal information provided. Access comments electronically on *http://www.regulations.gov* and on MSHA's website at *https://www.msha.gov/regulations/rulemaking.*

Docket: For access to the docket to read comments received, go to *http://www.regulations.gov* or *http://www.msha.gov/currentcomments.asp.* To read background documents, go to *http://www.regulations.gov.* Review comments in person at the Office of Standards, Regulations, and Variances, 201 12th Street South, Suite 4E401, Arlington, Virginia 22202–5452. Sign in at the receptionist's desk on the 4th Floor East, Suite 4E401.

Email Notification: To subscribe to receive email notification when MSHA publishes rulemaking documents in the **Federal Register**, go to *https://public.govdelivery.com/accounts/USDOL/subscriber/new.*

FOR FURTHER INFORMATION CONTACT: Sheila A. McConnell, Director, Office of Standards, Regulations, and Variances, MSHA, at *mcconnell.sheila.a@dol.gov* (email), 202–693–9440 (voice); or 202–693–9441 (facsimile). These are not toll-free numbers.

SUPPLEMENTARY INFORMATION:

I. Direct Final Rule

Concurrent with this proposed rule, MSHA is publishing a separate, substantially identical direct final rule in the Final Rules section of this **Federal Register** edition. The concurrent publication of these documents will speed notice and comment rulemaking under 30 U.S.C. 811 and the Administrative Procedure Act (see 5 U.S.C. 553) should the Agency decide to withdraw the direct final rule. All interested parties who wish to comment should comment at this time because MSHA does not anticipate initiating an additional comment period.

MSHA has determined that notice and public comment are unnecessary because the rule imposes no new requirements; it simply clarifies the application of MSHA's existing standards to technologies developed after the standards were promulgated. If MSHA does not receive significant adverse comments on or before February 13, 2020, the Agency will publish notification in the **Federal Register** no later than March 16, 2020, confirming the effective date of the direct final rule.

In the event the direct final rule is withdrawn because of significant adverse comments, the Agency will proceed with this proposed rulemaking by addressing the comments received and publishing a final rule. The comment period for this proposed rule runs concurrently with that of the direct final rule. Any comments received under this proposed rule will be treated as comments regarding the direct final rule. Likewise, significant adverse comments submitted to the direct final rule will be considered as comments to this proposed rule. The Agency will consider such comments in developing a subsequent final rule.

II. Background

A. General Discussion

A detonator is a device containing a detonating charge that is used to initiate an explosion reliably, at a specified time, and, as applicable, in a prescribed sequence. There are three types of detonators primarily used in blasting operations in MNM mines. These are non-electric, electric, and electronic detonators. A non-electric detonator is designed to initiate explosions without the use of electric wires. A non-electric detonator includes devices that use detonating cords, shock-tube systems or safety fuse detonators, or a combination of these.

An electric detonator uses electrical currents to initiate detonation. Electrical currents from the detonator's lead wires or connectors ignite an electric match which in turn ignites a pyrotechnic delay element that initiates the base charge. The pyrotechnic delay element burns at an approximated rate. The length and composition of the pyrotechnic delay element control the approximate rate of burn and thus the timing. Since the approximate rate of burn is subject to variation, the timing accuracy of electric detonators is affected. Electric detonator systems typically include a blasting machine that delivers the electrical current to the detonator. Circuit testers, such as a blaster's galvanometer, are used to check the continuity and resistance of

the individual detonator and the entire electric circuit.[1]

In contrast to electric detonators, electronic detonator systems do not have a pyrotechnic delay element. Electronic detonator systems are designed to use electronic components to transmit a firing signal with validated commands and secure communications to each detonator, and a detonator cannot be initiated by other means.

Typically, each detonator has a microchip to control sequence timing and an integrated circuit chip and a capacitor, internal to each detonator, to control the initiation time. Electronic detonators enable exact time delays between blasts to ensure the blast energy is used to break rock, reducing fugitive energy loss in the form of vibrations.

Unlike non-electric and electric systems, electronic detonators are uniquely designed by each manufacturer, which requires that these devices be used according to manufacturers' instructions. Because these electronic detonator systems require password log-ins, operators must authorize persons to initiate the detonations, which minimizes the potential for accidental misuse.

Based on MSHA's experience with the electronic detonator systems it has reviewed,[2] the Agency has found that electronic detonator systems have a number of advantages compared to non-electric and electric systems, including greater operator control to limit their use to authorized personnel, more precise timing, reduced vibrations, and a reduced sensitivity to stray electrical currents and radio frequencies.

B. Rulemaking Background

MSHA's existing standards in 30 CFR parts 56 and 57, Subpart E, focus on hazards associated with transporting, maintaining, using, or working near explosive materials, including detonators.

Since 1979, MSHA standards have defined detonators to mean any device containing a detonating charge that is used to initiate an explosive such as electric blasting caps and non-electrical instantaneous or delay blasting caps. At the time these standards were issued, MSHA believed that the definition provided for the automatic inclusion of new detonators as they developed. *Metal and Nonmetal Mine Safety; New and Revised Definitions and Safety and Health Standards for Explosives,* 44 FR 48535, 48538 (August 17, 1979).

On January 18, 1991, MSHA revised the definition of detonators in §§ 56.6000 and 57.6000 (56 FR 2072) to clarify that the definition does not include detonating cords and that the detonators may be either ''Class A'' (explosives that include devices that constitute a maximum shipping hazard) or ''Class C'' (explosive devices that may contain Class A explosives, but in restricted quantities) as classified by the Department of Transportation (DOT) in 49 CFR 173.53 and 173.100.[3]

Since MSHA published these rules, advancements in computer and micro-processing technology have led to electronic timing of detonations. On September 28, 2004, MSHA issued Program Information Bulletin (PIB) No. P04–20, Electronic Detonators and Requirements for Shunting and Circuit Testing, to respond to stakeholder inquiries concerning how to apply the MSHA requirements for shunting and circuit testing to electronic detonators. In PIB No. P04–20, MSHA reported results of the Agency's evaluation of two electronic detonator systems. MSHA found that the systems contained their own integral elements for shunting and circuit testing, which met the Agency's existing standards for shunting and circuit testing when used as recommended by the manufacturers. Since issuing PIB No. P04–20, MSHA has evaluated several other electronic detonator systems and has determined that these systems also contain their own integral elements for shunting and circuit testing that meet the intended MSHA requirements when these systems are used according to the manufacturers' instructions. Existing MSHA standards require operators to adhere to manufacturers' instructions for all detonation systems, including new systems. See 30 CFR 56.6308 and 57.6308; 56 FR 2072, 2081.

C. Regulatory Review and Reform

On February 28, 2008, the Small Business Administration (SBA) selected MSHA's explosives standards for regulatory review pursuant to its Small Business Regulatory Review and Reform Initiative[4] which was designed to identify existing federal rules that small business stakeholders believe should be reviewed and reformed. The MSHA reform nomination, discussed in the SBA's February 2008 report, stated that MSHA should update its existing explosive standards to be consistent with modern mining industry standards. The report further noted industry concerns that MSHA's existing standards do not address fundamental aspects of explosive safety, such as electronic detonation. On July 30, 2008, SBA also testified before the House Subcommittee on Regulations, Healthcare, and Trade that SBA's Office of Advocacy had met with nominated agencies to discuss the importance of reviewing and reforming the identified rules.[5]

In 2018, the Agency announced its intent to review existing regulations to assess compliance costs and reduce regulatory burden. As part of this review, MSHA sought stakeholders' assistance in identifying those regulations that could be repealed, replaced, or modified without reducing miners' safety or health. MSHA published on its website, *https://www.msha.gov/provide-or-view-comments-msha-regulations-repeal-replace-or-modify*, a notice that the Agency is seeking assistance in identifying regulations for review. All comments are posted on the Agency's website.

As a result of this solicitation, MSHA received comments from the Institute of Makers of Explosives (IME) requesting that MSHA modernize its standards to ''properly address'' electronic detonators. IME noted that electronic detonators have been used by the industry for over two decades and provide a ''sophisticated level of safety and security,'' and recommended several regulatory modifications to both coal and MNM standards. Specifically, IME proposed changes to §§ 56.6000 and 57.6000, the definition of

[1] MSHA *considers detonators fired* by a shock tube and incorporating a pre-programmed microchip delay rather than a pyrotechnic one to be electric detonators, not electronic detonators.

[2] *See https://arlweb.msha.gov/TECHSUPP/ACC/lists/00elecdet.pdf.*

[3] As MSHA was in the process of publishing this 1991 rule, DOT revised its classification requirement at 49 CFR 173.50 and 173.53 (55 FR 52619) consistent with the United Nations Recommendations on the Transport of Dangerous Goods, issued December 21, 1990. Under DOT's revisions, Class A explosives were reclassified as ''Division 1.1 and Division 1.2'' to mean explosives that have a mass explosion hazard (explosion would affect the entire load instantaneously) or projection hazard (explosion would result in projection of fragments). Class C explosives were reclassified as ''Division 1.4'' to mean explosives that have a minor explosion hazard (explosive effects are confined to the packaging). These revised definitions form the current classification system recognized for shipping and packaging explosives in the U.S.

[4] SBA, Office of Advocacy, Report on the Regulatory Flexibility Act, FY 2007; Annual Report of the Chief Counsel for Advocacy on Implementation of the Regulatory Flexibility Act and Executive Order 13272, February 2008.

[5] Testimony of the Honorable Thomas M. Sullivan Chief, Counsel for Advocacy U.S. Small Business Administration, U.S. House of Representatives, Committee on Small Business, Subcommittee on Regulations, Health Care, and Trade, July 30, 2008.

''Detonator;'' 56.6310, Misfire waiting period; 57.6407, Circuit testing; 57.6604, Precautions during storms; 75.1310, Explosives and blasting equipment; and 77.1303, Explosives, handling and use.

For this proposed rulemaking, MSHA addresses the use of electronic detonators in MNM surface and underground mines and modifies §§ 56.6000 and 57.6000, the definition of ''Detonator;'' 56.6310 and 57.6310, Misfire waiting period; 56.6407 and 57.6407, Circuit testing; and 57.6604, Precautions during storms. MSHA is amending certain portions of the explosives standards to include electronic detonators. However, the other explosives standards in Subparts E in 30 CFR parts 56 and 57 continue to apply to electronic detonators.

For those electronic detonator systems that the Agency has reviewed, MSHA agrees with IME that electronic detonators provide a working environment that is as safe or safer for miners compared to non-electric and electric detonators because they provide for greater control of a blast.[6] MSHA believes that recognizing electronic detonator systems as distinct from electric detonators will eliminate confusion over certain regulatory requirements. For example, §§ 56.6401 and 57.6401 and §§ 56.6407 and 57.6407 require that electric detonators be shunted and tested to provide protection against premature detonation caused by extraneous current flowing through portions of the circuit as they are prepared. Operators use a galvanometer or other instrument to test electric circuits to determine whether an individual series circuit is continuous, to locate broken wires and connections, and to avoid introducing excessive current to the circuit. 56 FR 2082–83.

However, the elect electronic detonator systems that MSHA has reviewed contain their own integral elements for shunting and circuit testing that exceed the safety protections in MSHA's requirements when the systems are used according to the manufacturer's instructions. These systems, typically, are designed with an integrated circuit and a capacitor system internally wired to each electronic detonator, which isolates the base charge from the wires leading to the internal capacitors and microchip, making shunting unnecessary.

In addition, based on MSHA's experience, the Agency has found that electronic detonator systems inherently provide more protection than MSHA's shunting and circuit testing standards do for electric detonators because electronic detonator systems communicate digitally to each detonator and are designed to prevent interference from stray currents and other electromagnetic interference. Additionally, electronic detonators are less likely to be misused because they cannot be fired simply by a battery or by other routine electric sources.

III. Section-by-Section Analysis

A. Sections 56.6000 and 57.6000—Definitions

Under proposed §§ 56.6000 and 57.6000, the definition for *Detonator* would be modified by adding the words ''electronic detonators,'' before the word ''electric'' in the second sentence of the paragraph. Also, in proposed § 56.6000 a comma would be added after the word ''caps'' in the second sentence.

The proposed change to §§ 56.6000 and 57.6000, *Detonator,* would modernize the definition by including electronic detonators. The proposed addition of a comma in § 56.6000 is for clarity and would conform with the definition of *Detonator* in § 57.6000.

B. Sections 56.6310 and 57.6310—Misfire Waiting Period

Sections 56.6310 and 57.6310 require that in the event of a misfire while blasting, personnel should wait a specific time period based on the type of detonator being used before entering the blast area for safety.

Under proposed §§ 56.6310 and 57.6310, a new paragraph (c) would be added that would require a 30 minute waiting period, or for the manufacturer-recommended time, whichever is longer, in the event of a misfire while blasting with an electronic detonator.

MSHA believes that waiting at least 30 minutes before entering a blast area if electronic detonators are involved in a misfire provides personnel an adequate amount of time to analyze the circumstances of the misfire and to develop a plan of action to safely enter the blast area. In MSHA's experience, this waiting period is consistent with industry-recommended standards.[7] In the event that an electronic detonator manufacturer recommends more than a 30-minute waiting period if a misfire occurs using its electronic detonators, MSHA proposes to require that persons must follow the manufacturer's recommended wait time before entering the blast area. This is consistent with §§ 56.6308 and 57.6308, requiring persons to follow manufacturer's instructions for using detonation systems.

C. Sections 56.6407 and 57.6407—Circuit Testing

Sections 56.6407 and 57.6407 require that blasting circuits be tested to ensure the circuits are properly wired. Under proposed § 56.6407(a) and (c), the words ''or electronic'' would be added to paragraphs (a) and (c). In addition, under proposed § 57.6407(a)(3) and (b)(2), the words ''or electronic'' would be added to paragraphs (a)(3) and (b)(2).

A blasting galvanometer is used to test electric detonator circuits to prevent misfires by determining whether an individual series circuit is continuous and by locating broken wires and connections. A blasting galvanometer or other appropriate type of testing equipment is used to avoid introducing excessive current into the circuit. This differs from the electronic detonator systems the Agency has reviewed because these systems have a means for circuit testing incorporated into their designs. The Agency anticipates that other electronic detonator systems MSHA has not reviewed also have integral circuit testing mechanisms. While revising the standard would clarify that the circuit-testing requirement applies to electronic detonator systems, the Agency believes that most or all electronic detonator systems already comply with this safety standard. The proposed changes are not intended to require that electronic detonator systems with integral circuit testing be tested additionally with a galvanometer or other outside mechanism.

D. Section 57.6604(b)—Precautions During Storms

Under § 57.6604, underground electrical blasting operations must be suspended during the approach and progress of an electrical storm. Electromagnetic fields and stray currents can be generated from lightning. Higher energy levels of electromagnetic interference and stray current are generally disruptive or damaging to electronic equipment. Based on MSHA's experience with the electronic detonators it has examined, electronic detonator systems and technologies generally have the base charge isolated from the wires leading to

[6] *See* Program Information Bulletin No. P04–20, Electronic Detonators and Requirements for Shunting and Circuit Testing. In addition, the U.S. Department of the Interior's Office of Surface Mining Reclamation and Enforcement (OSMRE) published a study in 2013 that concluded that electronic detonators are more accurate and precise than the non-electric systems. (Field Testing and Analysis of Blasts Utilizing Short Delays with Electronic Detonators (Lusk, Silva, and Eltschlager (September 2013)).

[7] Institute of Makers of Explosives, Safety Library Publication No. 4, Warnings and Instructions for Consumers in Transporting, Storing, Handling, and Using Explosive Materials (October 2016).

the internal capacitors and microchip providing built-in protection from interference from electromagnetic fields and stray current. However, MSHA is aware that an electromagnetic pulse such as lightning strikes traveling through underground mines by paths such as air lines, water lines, and conductive ore bodies, can damage all types of detonators and equipment and cause misfires. Therefore, under proposed § 57.6604(b), the words ''electronic or'' would be added after the word ''Underground.''

The Agency believes that most or all electronic detonator systems are designed to minimize or eliminate the possibility that lightning could initiate a blast; many systems may not be capable of being initiated by lightning. In addition, to the extent these systems are capable of being initiated by lightning, MSHA believes that operators already have been applying these requirements to electronic detonator systems through manufacturers' directions and accepted industry practices. MSHA believes the proposed revision will have little or no actual impact on operators' existing practices and simply eliminates ambiguity in the requirements under § 57.6604(b).

III. Regulatory Economic Analysis

Executive Orders (E.O.) 12866 and 13563

Executive Orders 12866 and 13563 direct agencies to assess all costs and benefits of available regulatory alternatives and, if regulation is necessary, to select regulatory approaches that maximize net benefits (including potential economic, environmental, public health and safety effects, distributive impacts, and equity). Executive Order 13563 emphasizes the importance of quantifying both costs and benefits, of reducing costs, of harmonizing rules, and of promoting flexibility.

Pursuant to the Congressional Review Act (5 U.S.C. 801 *et seq.*), the Office of Information and Regulatory Affairs designated this proposed rule as not a 'major rule', as defined by 5 U.S.C. 804(2).

MSHA has assessed the costs and benefits of the changes and has determined that there are no costs associated with this proposed rule. Currently, electronic detonators have been used by the mining industry for more than 20 years and account for at least 15 percent of the blast initiation systems used in the U.S. in all industries.[8] As part of the Agency's regulatory reform efforts, MSHA received comments from industry representatives supporting the proposed changes. This proposed rule codifies activity already undertaken by the mining industry regarding electronic detonators. This proposed rulemaking is a deregulatory action under E.O. 13771 in its effects.

This proposed rule will not increase or decrease the costs or benefits associated with the use of electronic detonators; however, this action would eliminate ambiguity about detonator options in the application of existing requirements so that mine operators would be able to use their resources more efficiently when making business decisions.

Among other things, this proposed rule clarifies the nonapplicability of certain MSHA standards to electronic detonating systems. For example, while the new ''circuit testing'' standard now makes clear that the standard contemplates electronic detonating systems as well as electric detonators, the preamble clarifies that most or all of these electronic systems inherently comply and that, therefore, the specific actions operators must take when using electric detonators generally need not be taken for electronic detonating systems. Likewise, while this proposed rulemaking does not directly address MSHA's shunting standards, the preamble clarifies that, while those standards require operators to take specific actions when using electric detonators, they are not applicable to inherently compliant electronic detonating systems. Through these clarifications, MSHA would ensure the safety advantages offered by the use of electronic detonators are available to mine operators, including greater operator control to limit use to authorized personnel, more precise timing, reduced vibrations, and a reduced sensitivity to stray electrical currents and radio frequencies. Furthermore, consistent with the directive in E.O. 13777, this proposed rule would update outdated regulations and accommodate technological advances.

Under E.O. 12866, a significant regulatory action is one meeting any of a number of specified conditions, including the following: Having an annual effect on the economy of $100 million or more, creating a serious inconsistency or interfering with an action of another agency, materially altering the budgetary impact of entitlements or the rights of entitlement recipients, or raising novel legal or policy issues. MSHA has determined that the proposed rule is ''other significant'' under E.O. 12866.

IV. Feasibility

MSHA has concluded that the requirements of the proposed rule would be both technologically and economically feasible because the proposed requirements are already generally accepted industry practices for the use of electronic detonators.

V. Regulatory Flexibility Act and Small Business Regulatory Enforcement Fairness Act

Pursuant to the Regulatory Flexibility Act (RFA) of 1980, as amended by the Small Business Regulatory Enforcement Fairness Act (SBREFA), MSHA has analyzed the compliance cost impact of the proposed rule on small entities. Based on that analysis, MSHA certifies that the proposed rule would not have a significant economic impact on a substantial number of small entities because it does not impose any new costs. Therefore, the Agency is not required to develop an initial regulatory flexibility analysis.

VI. Paperwork Reduction Act of 1995

The Paperwork Reduction Act (PRA) provides for the Federal government's collection, use, and dissemination of information. The goals of the PRA include minimizing paperwork and reporting burdens and ensuring the maximum possible utility from the information that is collected (44 U.S.C. 3501). There are no information collections associated with this proposed rule.

VII. Other Regulatory Considerations

A. The Unfunded Mandates Reform Act Of 1995

MSHA has reviewed the proposed rule under the Unfunded Mandates Reform Act of 1995 (2 U.S.C. 1501 *et seq.*). MSHA has determined that this proposed rule does not include any federal mandate that may result in increased expenditures by State, local, or tribal governments; nor would it increase private sector expenditures by more than $100 million (adjusted for inflation) in any one year or significantly or uniquely affect small governments. Accordingly, the Unfunded Mandates Reform Act of 1995 requires no further Agency action or analysis. Since the proposed rule does not cost over $100 million in any one year, the proposed rule is not a major rule under the Unfunded Mandates Reform Act of 1995.

[8] U.S. Geological Survey, Minerals Yearbook, Explosive Consumption Report (2015–2016).

B. Executive Order 13132: Federalism

The proposed rule does not have ''federalism implications'' because it would not ''have substantial direct effects on the States, on the relationship between the national government and the States, or on the distribution of power and responsibilities among the various levels of government.'' Accordingly, under E.O. 13132, no further Agency action or analysis is required.

C. Executive Order 12630: Government Actions and Interference With Constitutionally Protected Property Rights

The proposed rule does not implement a policy with takings implications. Accordingly, under E.O. 12630, no further Agency action or analysis is required.

D. Executive Order 12988: Civil Justice Reform

The proposed rule was written to provide a clear legal standard for affected conduct and was carefully reviewed to eliminate drafting errors and ambiguities, so as to minimize litigation and undue burden on the Federal court system. Accordingly, the proposed rule meets the applicable standards provided in section 3 of E.O. 12988, Civil Justice Reform.

E. Executive Order 13175: Consultation and Coordination With Indian Tribal Governments

This proposed rule does not have ''tribal implications'' because it would not ''have substantial direct effects on one or more Indian tribes, on the relationship between the Federal government and Indian tribes, or on the distribution of power and responsibilities between the Federal government and Indian tribes.'' Accordingly, under E.O. 13175, no further Agency action or analysis is required.

F. Executive Order 13211: Actions Concerning Regulations That Significantly Affect Energy Supply, Distribution, or Use

Executive Order 13211 requires agencies to publish a statement of energy effects when a rule has a significant energy action that adversely affects energy supply, distribution or use. MSHA has reviewed this proposed rule for its energy effects because the proposed rule applies to the metal and nonmetal mining sector. MSHA has concluded that it is not a significant energy action because it is not likely to have a significant adverse effect on the supply, distribution, or use of energy. Accordingly, under this analysis, no further Agency action or analysis is required.

G. Executive Order 13272: Proper Consideration of Small Entities in Agency Rulemaking

MSHA has thoroughly reviewed the proposed rule to assess and take appropriate account of its potential impact on small businesses, small governmental jurisdictions, and small organizations. MSHA has determined and certified that the proposed rule does not have a significant economic impact on a substantial number of small entities.

List of Subjects

30 CFR Part 56

Chemicals, Electric power, Explosives, Fire prevention, Hazardous substances, Metals, Mine safety and health.

30 CFR Part 57

Chemicals, Electric power, Explosives, Fire prevention, Hazardous substances, Metals, Mine safety and health.

For the reasons set out in the preamble, and under the authority of the Federal Mine Safety and Health Act of 1977, as amended by the Mine Improvement and New Emergency Response Act of 2006, MSHA proposes to amend chapter I of title 30 of the Code of Federal Regulations as follows:

PART 56—SAFETY AND HEALTH STANDARDS SURFACE METAL AND NONMETAL MINES

■ 1. The authority citation for part 56 continues to read as follows:

Authority: 30 U.S.C. 811.

■ 2. In § 56.6000, revise the definition for ''Detonator'' to read as follows:

§ 56.6000 Definitions.

* * * * *

Detonator. Any device containing a detonating charge used to initiate an explosive. These devices include electronic detonators, electric or nonelectric instantaneous or delay blasting caps, and delay connectors. The term ''detonator'' does not include detonating cord. Detonators may be either ''Class A'' detonators or ''Class C'' detonators, as classified by the Department of Transportation in 49 CFR 173.53 and 173.100 which is available at any MSHA Metal and Nonmetal Safety and Health district office.

* * * * *

■ 3. Amend § 56.6310 by:

■ a. Revising paragraphs (a) and (b); and

■ b. Adding paragraph (c).

The revisions and addition read as follows:

§ 56.6310 Misfire waiting period.

* * * * *

(a) For 30 minutes if safety fuse and blasting caps are used;

(b) For 15 minutes if any other type detonators are used; or

(c) For 30 minutes if electronic detonators are used, or for the manufacturer-recommended time, whichever is longer.

§ 56.6407 [Amended]

■ 4. In § 56.6407 amend paragraphs (a) and (c) by adding the words ''or electronic'' after the word ''electric''.

PART 57—SAFETY AND HEALTH STANDARDS UNDERGROUND METAL AND NONMETAL MINES

■ 5. The authority citation for part 57 continues to read as follows:

Authority: 30 U.S.C. 811.

■ 6. In § 57.6000, revise the definition for ''Detonator'' to read as follows:

§ 57.6000 Definitions.

* * * * *

Detonator. Any device containing a detonating charge used to initiate an explosive. These devices include electronic detonators, electric or nonelectric instantaneous or delay blasting caps, and delay connectors. The term ''detonator'' does not include detonating cord. Detonators may be either ''Class A'' detonators or ''Class C'' detonators, as classified by the Department of Transportation in 49 CFR 173.53 and 173.100 which is available at any MSHA Metal and Nonmetal Safety and Health district office.

* * * * *

■ 7. Amend § 57.6310 by

■ a. Revising paragraphs (a) and (b); and

■ b. Adding paragraph (c).

The revisions and addition read as follows:

§ 57.6310 Misfire waiting period.

* * * * *

(a) For 30 minutes if safety fuse and blasting caps are used;

(b) For 15 minutes if any other type detonators are used; or

(c) For 30 minutes if electronic detonators are used, or for the manufacturer-recommended time, whichever is longer.

§ 57.6407 [Amended]

■ 8. In § 57.6407 amend paragraphs (a)(3) and (b)(2) by adding the words ''or electronic'' after the word ''electric''.

§ 57.6604 [Amended]

■ 9. Amend § 57.6604(b) by adding the words ''electronic or'' after the word ''Underground''.

David G. Zatezalo,

Assistant Secretary of Labor for Mine Safety and Health Administration.

[FR Doc. 2019–28447 Filed 1–13–20; 8:45 am]

BILLING CODE 4520–43–P

DEPARTMENT OF HOMELAND SECURITY

Coast Guard

33 CFR Part 100

[Docket Number USCG–2018–0949]

RIN 1625–AA08

Special Local Regulations; Recurring Marine Events, Sector St. Petersburg

AGENCY: Coast Guard, DHS.

ACTION: Notice of proposed rulemaking.

SUMMARY: The Coast Guard proposes to revise existing regulations and consolidate into one table special local regulations for recurring marine events at various locations within the geographic boundaries of the Seventh Coast Guard District Captain of the Port (COTP) St. Petersburg Zone. Consolidating marine events into one table simplifies Coast Guard oversight and public notification of special local regulations within COTP St. Petersburg Zone. The Coast Guard invites your comments on this proposed rulemaking.

DATES: Comments and related material must be received by the Coast Guard on or before February 13, 2020.

ADDRESSES: You may submit comments identified by docket number USCG–2018–0749 using the Federal eRulemaking Portal at *http://www.regulations.gov.* See the ''Public Participation and Request for Comments'' portion of the **SUPPLEMENTARY INFORMATION** section for further instructions on submitting comments.

FOR FURTHER INFORMATION CONTACT: If you have questions about this proposed rulemaking, call or email Marine Science Technician First Class Michael D. Shackleford, Sector St. Petersburg Prevention Department, Coast Guard; telephone (813) 228–2191, email *Michael.d.shackleford@uscg.mil.*

SUPPLEMENTARY INFORMATION:

I. Table of Abbreviations

CFR Code of Federal Regulations
COTP Captain of the Port
DHS Department of Homeland Security
FR Federal Register
NPRM Notice of proposed rulemaking
§ Section
U.S.C. United States Code

II. Background, Purpose, and Legal Basis

Recurring marine events within the Seventh Coast Guard District are currently listed in 33 CFR 100.701, Table to § 100.701. The process for amending the table (*e.g.* adding or removing marine events) is lengthy and inefficient since it includes recurring marine events for seven different COTP zones within the Seventh District. To expedite and simplify the rule-making process for new marine events/special local regulations, COTP's resorted to creating individual rules rather than amending the Table to § 100.701.

This rule serves two purposes: (1) Create a table of recurring marine events/special local regulations occurring solely within the COTP St. Petersburg Zone, and (2) consolidate into that table marine events/special local regulations previously established outside of Table to § 100.701. The proposed new table would facilitate management of and public access to information about marine events within the COTP St. Petersburg Zone.

The Coast Guard proposes this rulemaking under authority in 46 U.S.C. 70041.

III. Discussion of Proposed Rule

This rule proposes to make the following changes:

1. Establish 33 CFR 100.703 Special Local Regulations; Marine Events Within the Captain of the Port St. Petersburg Zone;
2. Remove the existing marine events/special local regulations listed in Table to § 100.701(c) under COTP Zone St. Petersburg; Special Local Regulations to proposed new § 100.703, Table to § 100.703;
3. Delete the existing special local regulation in § 100.717 for the ''Annual Fort Myers Beach Offshore Grand Prix; Fort Myers, FL'' because it is no longer held;
4. Delete the existing special local regulation in in § 100.718 for the ''Annual Suncoast Kilo Run; Sarasota Bay, Sarasota, FL'' because it is no longer held;
5. Move the existing special local regulation in § 100.720 for the event, ''Suncoast Super Boat Grand Prix, Gulf of Mexico; Sarasota, FL'' to proposed new § 100.703, Table to § 100.703, and delete existing § 100.720;
6. Move the existing special local regulation in § 100.721 for the event, ''Clearwater Super Boat National Championship, Gulf of Mexico; Clearwater Beach, FL'', to proposed new § 100.703, Table to § 100.703, and delete existing § 100.721;
7. Move the existing special local regulation in § 100.722 for the event, ''Bradenton Area Riverwalk Regatta, Manatee River; Bradenton, FL'' to proposed new § 100.703, Table to § 100.703, and delete existing § 100.722;
8. Delete the existing special local regulation in § 100.728 for the event, ''Hurricane Offshore Classic, St. Petersburg, FL'' because it is no longer held;
9. Move the existing special local regulation in § 100.734 for the event, ''Annual Gasparilla Marine Parade; Hillsborough bay, Tampa, FL'' to proposed new § 100.703, Table to § 100.703, and delete existing § 100.734;
10. Move the existing special local regulation in § 100.735 for the event, ''Annual OPA World Championships, Gulf of Mexico; Englewood Beach, FL'' to proposed new § 100.703, Table to § 100.703, and delete existing § 100.735;
11. Delete the existing special local regulation in § 100.736 for the event, ''Annual Fort Myers Beach air show'' because it is no longer held;
12. Delete the existing special local regulation in § 100.740 for the event, ''Annual Offshore Super Series Boat Race'' because it is no longer held;
13. Add new event, ''Gulfport Grand Prix, Gulfport, FL'' to proposed new § 100.703, Table to § 100.703, Line 3;
14. Add new event, ''St. Pete Beach Grand Prix of the Gulf, St. Pete Beach, FL'' to proposed new § 100.703, Table to § 100.703, Line 4;
15. Add new event, ''Battle of the Bridges, Venice, FL'' to proposed new § 100.703, Table to § 100.703, Line 6; and
16. Add new event, ''Roar Offshore, Fort Myers Beach, FL'' to proposed new § 100.703, Table to § 100.703, Line 8.

The marine events as listed in proposed new Table to proposed new § 100.703, Table to § 100.703 are scheduled to occur over a particular time during each month each year. Exact dates are intentionally omitted since calendar dates for a specific events change from year to year. Once dates for a marine event are known, the Coast Guard will notify the public of its intent to enforce the special local regulation through various means including a Notice of Enforcement published in the **Federal Register**, Local Notice to Mariners, and Broadcast Notice to Mariners.

IV. Regulatory Analyses

We developed this proposed rule after considering numerous statutes and

Executive orders related to rulemaking. Below we summarize our analyses based on a number of these statutes and Executive orders and we discuss First Amendment rights of protestors.

A. Regulatory Planning and Review

Executive Orders 12866 and 13563 direct agencies to assess the costs and benefits of available regulatory alternatives and, if regulation is necessary, to select regulatory approaches that maximize net benefits. Executive Order 13771 directs agencies to control regulatory costs through a budgeting process. This NPRM has not been designated a ''significant regulatory action,'' under Executive Order 12866. Accordingly, the NPRM has not been reviewed by the Office of Management and Budget (OMB), and pursuant to OMB guidance it is exempt from the requirements of Executive Order 13771.

This regulatory action determination is based on the size, location, and duration of the special local regulations. These areas are limited in size and duration, and usually do not affect high vessel traffic areas. Moreover, the Coast Guard would provide advance notice of the regulated areas to the local maritime community via Notice of Enforcement published in the **Federal Register**, by Local Notice to Mariners, Broadcast to Mariners via VHF–FM marine channel 16, and the rule would allow vessels to seek permission to enter the regulated area.

B. Impact on Small Entities

The Regulatory Flexibility Act of 1980, 5 U.S.C. 601–612, as amended, requires Federal agencies to consider the potential impact of regulations on small entities during rulemaking. The term ''small entities'' comprises small businesses, not-for-profit organizations that are independently owned and operated and are not dominant in their fields, and governmental jurisdictions with populations of less than 50,000. The Coast Guard certifies under 5 U.S.C. 605(b) that this proposed rule would not have a significant economic impact on a substantial number of small entities.

While some owners or operators of vessels intending to transit the safety zone may be small entities, for the reasons stated in section IV.A above, this proposed rule would not have a significant economic impact on any vessel owner or operator.

If you think that your business, organization, or governmental jurisdiction qualifies as a small entity and that this rule would have a significant economic impact on it, please submit a comment (see **ADDRESSES**) explaining why you think it qualifies and how and to what degree this rule would economically affect it.

Under section 213(a) of the Small Business Regulatory Enforcement Fairness Act of 1996 (Pub. L. 104–121), we want to assist small entities in understanding this proposed rule. If the rule would affect your small business, organization, or governmental jurisdiction and you have questions concerning its provisions or options for compliance, please contact the person listed in the **FOR FURTHER INFORMATION CONTACT** section. The Coast Guard will not retaliate against small entities that question or complain about this proposed rule or any policy or action of the Coast Guard.

C. Collection of Information

This proposed rule would not call for a new collection of information under the Paperwork Reduction Act of 1995 (44 U.S.C. 3501–3520).

D. Federalism and Indian Tribal Governments

A rule has implications for federalism under Executive Order 13132, Federalism, if it has a substantial direct effect on the States, on the relationship between the national government and the States, or on the distribution of power and responsibilities among the various levels of government. We have analyzed this proposed rule under that Order and have determined that it is consistent with the fundamental federalism principles and preemption requirements described in Executive Order 13132.

Also, this proposed rule does not have tribal implications under Executive Order 13175, Consultation and Coordination with Indian Tribal Governments, because it would not have a substantial direct effect on one or more Indian tribes, on the relationship between the Federal Government and Indian tribes, or on the distribution of power and responsibilities between the Federal Government and Indian tribes. If you believe this proposed rule has implications for federalism or Indian tribes, please contact the person listed in the **FOR FURTHER INFORMATION CONTACT** section.

E. Unfunded Mandates Reform Act

The Unfunded Mandates Reform Act of 1995 (2 U.S.C. 1531–1538) requires Federal agencies to assess the effects of their discretionary regulatory actions. In particular, the Act addresses actions that may result in the expenditure by a State, local, or tribal government, in the aggregate, or by the private sector of $100,000,000 (adjusted for inflation) or more in any one year. Though this proposed rule would not result in such an expenditure, we do discuss the effects of this rule elsewhere in this preamble.

F. Environment

We have analyzed this proposed rule under Department of Homeland Security Directive 023–01, Rev. 1, associated implementing instructions, and Environmental Planning COMDTINST 5090.1 (series), which guide the Coast Guard in complying with the National Environmental Policy Act of 1969 (42 U.S.C. 4321–4370f), and have made a preliminary determination that this action is one of a category of actions that do not individually or cumulatively have a significant effect on the human environment. This proposed rule involves the establishment of special local regulations for recurring marine events within the COTP St. Petersburg Zone. Normally such actions are categorically excluded from further review under paragraphs L61 of Appendix A, Table 1 of DHS Instruction Manual 023–01–001–01, Rev. 1. A preliminary Memorandum for Record supporting this determination is available in the docket where indicated in **ADDRESSES**. We seek any comments or information that may lead to the discovery of a significant environmental impact from this proposed rule.

G. Protest Activities

The Coast Guard respects the First Amendment rights of protesters. Protesters are asked to contact the person listed in the **FOR FURTHER INFORMATION CONTACT** section to coordinate protest activities so that your message can be received without jeopardizing the safety or security of people, places, or vessels.

V. Public Participation and Request for Comments

We view public participation as essential to effective rulemaking, and will consider all comments and material received during the comment period. Your comment can help shape the outcome of this rulemaking. If you submit a comment, please include the docket number for this rulemaking, indicate the specific section of this document to which each comment applies, and provide a reason for each suggestion or recommendation.

We encourage you to submit comments through the Federal eRulemaking Portal at *http://www.regulations.gov.* If your material cannot be submitted using *http://www.regulations.gov,* contact the person in the **FOR FURTHER INFORMATION**

CONTACT section of this document for alternate instructions.

We accept anonymous comments. All comments received will be posted without change to *http://www.regulations.gov* and will include any personal information you have provided. For more about privacy and the docket, see DHS's Correspondence System of Records notice (84 FR 48645, September 26, 2018).

Documents mentioned in this NPRM as being available in the docket, and all public comments, will be in our online docket at *http://www.regulations.gov* and can be viewed by following that website's instructions. Additionally, if you go to the online docket and sign up for email alerts, you will be notified when comments are posted or a final rule is published.

List of Subjects in 33 CFR Part 100

Harbors, Marine Safety, Navigation (water), Reporting and Record keeping requirements, Security measures, Waterways.

For the reasons discussed in the preamble, the Coast Guard proposes to amend 33 CFR parts 100 as follows:

PART 100—SAFETY OF LIFE ON NAVIGABLE WATERS

■ 1. The authority citation for Part 100 continues to read as follows:

Authority: 46 U.S.C. 70041; 33 CFR 1.05–1.

■ 2. In § 100.701 revise Table to § 100.701.

§ 100.701 Special Local Regulations; Marine Events in the Seventh Coast Guard District.

* * * * *

TABLE TO § 100.701

No./date	Event	Sponsor	Location
(a) COTP Zone San Juan; Special Local Regulations			
1. 1st Friday, Saturday, and Sunday of February.	CNSJ International Regatta	Club Nautico de San Juan	San Juan, Puerto Rico; (1) Outer Harbor Race Area. All waters of Bahia de San Juan within a line connecting the following points: Starting at Point 1 in position 18°28.4′ N, 66°07.6′ W; then south to Point 2 in position 18°28.1′ N, 66°07.8′ W; then southeast to Point 3 in position 18°27.8′ N, 66°07.4′ W; then southeast to point 4 in position 18°27.6′ N, 66°07.3′ W; then west to point 5 in position 18°27.6′ N, 66°07.8′ W; then north to point 6 in position 18°28.4′ N, 66°07.8′ W; then east to the origin. (2) Inner Harbor Race Area; All waters of Bahia de San Juan within a line connecting the following points: Starting at Point 1 in position 18°27.6′ N, 66°07.8′ W; then east to Point 2 in position 18°27.6′ N, 66°07.1′ W; then southeast to Point 3 in position 18°27.4′ N, 66°06.9′ W; then west to point 4 in position 18°27.4′ N, 66°07.7′ W; then northwest to the origin.
2. Last Full Weekend of March.	St. Thomas International Regatta.	St. Thomas Yacht Club	St. Thomas, U.S. Virgin Islands; All waters of St. Thomas Harbor encompassed within the following points: Starting at Point 1 in position 18°19.9′ N, 64°55.9′ W; thence east to Point 2 in position 18°19.97′ N, 64°55.8′ W; thence southeast to Point 3 in position 18°19.6′ N, 64°55.6′ W; thence south to point 4 in position 18°19.1′ N, 64°55.5′ W; thence west to point 5 in position 18°19.1′ N, 64°55.6′ W; thence north to point 6 in position 18°19.6′ N, 64°55.8′ W; thence northwest back to origin at Harbor, St. Thomas, San Juan.
3. Last week of April	St. Thomas Carnival	Virgin Islands Carnival Committee.	St. Thomas, U.S. Virgin Islands; (1) Race Area. All waters of the St. Thomas Harbor located around Hassel Island, St. Thomas, U.S. Virgin Island encompassed within the following points: Starting at Point 1 in position 18°20.2′ N, 64°56.1′ W; thence southeast to Point 2 in position 18°19.7′ N, 64°55.7′ W; thence south to Point 3 in position 18°19.4′ N, 64°55.7′ W; thence southwest to point 4 in position 18°19.3′ N, 64°56.0′ W; thence northwest to point 5 in position 18°19.9′ N, 64°56.5′ W; thence northeast to point 6 in position 18°20.2′ N, 064°56.3′ W; thence east back to origin. (2) Jet Ski Race Area. All waters encompassed the following points: Starting at Point 1 in position 18°20.1′ N, 64°55.9′ W; thence west to Point 2 in position 18°20.1′ N, 64°56.1′ W; thence north to Point 3 in position 18°20.3′ N, 64°56.1′ W; thence east to Point 4 in position 18°20.3′ N, 64°55.9′ W; thence south back to origin.

TABLE TO § 100.701—Continued

No./date	Event	Sponsor	Location
			(3) Buffer Zone. All waters of the St. Thomas Harbor located around Hassel Island, encompassed within the following points: Starting at Point 1 in position 18°20.3′ N, 64°55.9′ W; thence southeast to Point 2 in position 18°19.7′ N, 64°55.7′ W; thence south to Point 3 in position 18°19.3′ N, 64°55.72′ W; thence southwest to Point 4 in position 18°19.2′ N, 64°56′ W; thence northwest to Point 5 in position 18°19.9′ N, 64°56.5′ W; thence northeast to Point 6 in position 18°20.3′ N, 64°56.3′ W; thence east back to origin. (4) Spectator Area. All waters of the St. Thomas Harbor located east of Hassel Island, encompassed within the following points: Starting at Point 1 in position 18°20.3′ N, 64°55.8′ W; thence southeast to Point 2 in position 18°19.9′ N, 64°55.7′ W; thence northeast to Point 3 in position 18°20.2′ N, 64°55.5′ W; thence northwest back to origin.
4. 1st Sunday of May	Ironman 70.3 St. Croix	Project St. Croix, Inc	St. Croix (Christiansted Harbor), U.S. Virgin Islands; All waters encompassed within the following points: point 1 on the shoreline at Kings Wharf at position 17°44′51″ N, 064°42′16″ W, thence north to point 2 at the southwest corner of Protestant Cay in position 17°44′56″ N, 064°42′12″ W, then east along the shoreline to point 3 at the southeast corner of Protestant Cay in position 17°44′56″ N, 064°42′08″ W, thence northeast to point 4 at Christiansted Harbor Channel Round Reef Northeast Junction Lighted Buoy RR in position 17°45′24″ N, 064°41′45″ W, thence southeast to point 5 at Christiansted Schooner Channel Lighted Buoy 5 in position 17°45′18″ N, 064°41′43″ W, thence southwest to point 6 at Christiansted Harbor Channel Buoy 15 in position 17°44′56″ N, 064°41′56″ W, thence southwest to point 7 on the shoreline north of Fort Christiansted in position 17°44′51″ N, 064°42′05″ W, thence west along the shoreline to origin.
5. July 4th	Fireworks Display	St. John Festival & Cul., Org.	St. John (West of Cruz Bay/Northeast of Steven Cay), U.S. Virgin Islands; All waters from the surface to the bottom for a radius of 200 yards centered around position 18°19′55″ N, 064°48′06″ W.
6. 3rd Week of July, Sunday	San Juan Harbor Swim	Municipality of Cataño	San Juan Harbor, San Juan, Puerto Rico; All waters encompassed within the following points: point 1: La Puntilla Final, Coast Guard Base at position 18°27′33″ N, 066°07′00″ W, then south to point 2: Cataño Ferry Pier at position 18°26′36″ N, 066°07′00″ W, then northeast along the Cataño shoreline to point 3: Punta Cataño at position 18°26′40″ N, 066°06′48″ W, then northwest to point 4: Pier 1 San Juan at position 18°27′40″ N, 066°06′49″ W, then back along the shoreline to origin.
7. 1st Sunday of September	Cruce A Nado International	Cruce a Nado Inc	Ponce Harbor, Bahia de Ponce, San Juan; All waters of Bahia de Ponce encompassed within the following points: Starting at Point 1 in position 17°58.9′ N, 66°37.5′ W; thence southwest to Point 2 in position 17°57.5′ N, 66°38.2′ W; thence southeast to Point 3 in position 17°57.4′ N, 66°37.9′ W; thence northeast to point 4 in position 17°58.7′ N, 66°37.3′ W; thence northwest along the northeastern shoreline of Bahia de Ponce to the origin.
8. 2nd Sunday of October	St. Croix Coral Reef Swim	The Buccaneer Resort	St. Croix, U.S. Virgin Islands; All waters of Christiansted Harbor within the following points: Starting at Point 1 in position 18°45.7′ N, 64°40.6′ W; then northeast to Point 2 in position 18°47.3′ N, 64°37.5 W; then southeast to Point 3 in position 17°46.9′ N, 64°37.2′ W; then southwest to point 4 in position 17°45.51′ N, 64°39.7′ W; then northwest to the origin.

TABLE TO § 100.701—Continued

No./date	Event	Sponsor	Location
9. December 31st	Fireworks St. Thomas, Great Bay.	Mr. Victor Laurenza, Pyrotecnico, New Castle, PA.	St. Thomas (Great Bay area), U.S. Virgin Islands; All waters within a radius of 600 feet centered around position 18°19′14″ N, 064°50′18″ W.
10. December—1st week	Christmas Boat Parade	St. Croix Christmas Boat Committee.	St. Croix (Christiansted Harbor), U.S. Virgin Islands; 200 yards off-shore around Protestant Cay beginning in position 17°45′56″ N, 064°42′16″ W, around the cay and back to the beginning position.
11. December—2nd week	Christmas Boat Parade	Club Nautico de San Juan	San Juan, Puerto Rico; Parade route. All waters of San Juan Harbor within a moving zone that will begin at Club Nautico de San Juan, move towards El Morro and then return, to Club Nautico de San Juan; this zone will at all times extend 50 yards in front of the lead vessel, 50 yards behind the last vessel, and 50 yards out from all participating vessels.
(b) COTP Zone Key West; Special Local Regulations			
1. 3rd Saturday of January, Monday–Friday.	Yachting Key West Race Week.	Premiere Racing, Inc	Inside the reef on either side of main ship channel, Key West Harbor Entrance, Key West, Florida.
2. Last Friday of April	Conch Republic Navy Parade and Battle.	Conch Republic	All waters approximately 150 yards offshore from Ocean Key Sunset Pier, Mallory Square and the Hilton Pier within the Key West Harbor in Key West, Florida.
3. 1st Weekend of June	Swim around Key West	Florida Keys Community College.	Beginning at Smather's Beach in Key West, Florida. The regulated area will move, west to the area offshore of Fort Zach State Park, north through Key West Harbor, east through Flemming Cut, south on Cow Key Channel and west back to origin The center of the regulated area will at all times remain approximately 50 yards offshore of the island of Key West, Florida; extend 50 yards in front of the lead safety vessel preceding the first race participants; extend 50 yards behind the safety vessel trailing the last race participants; and at all times extend 100 yards on either side of the race participants and safety vessels.
4. 2nd Week of November, Wednesday–Sunday.	Key West World Championship.	Super Boat International Productions, Inc.	In the Atlantic Ocean, off the tip of Key West, Florida, on the waters of the Key West Main Ship Channel, Key West Turning Basin, and Key West Harbor Entrance.
(c) COTP Zone Jacksonville; Special Local Regulations			
1. Last Saturday of February	El Cheapo Sheepshead Tournament.	Jacksonville Offshore Fishing Club.	Mayport Boat Ramp, Jacksonville, Florida; 500 foot radius from the boat ramp.
2. 1st Saturday of March	Jacksonville Invitational	Stanton Rowing Foundation (May vary).	Ortega River Race Course, Jacksonville, Florida; South of Timuquana Bridge.
3. 1st Saturday of March	Stanton Invitational (Rowing Race).	Stanton Rowing Foundation.	Ortega River Race Course, Jacksonville, Florida; South of Timuquana Bridge.
4. 1st weekend of March	Hydro X Tour	H2X Racing Promotions	Lake Dora, Tavares, Florida; All waters encompassed within the following points: Starting at Point 1 in position 28°47′59″ N, 81°43′41″ W; thence south to Point 2 in position 28°47′53″ N, 81°43′41″ W; thence east to Point 3 in position 28°47′53″ N, 81°43′19″ W; thence north to Point 4 in position 28°47′59″ N, 81°43′19″ W; thence west back to origin.
5. 2nd Full Weekend of March.	TICO Warbird Air Show	Valiant Air Command	Titusville; Indian River, FL: All waters encompassed within the following points: Starting at the shoreline then due east to Point 1 at position 28°31′25.15″ N, 080°46′32.73″ W, then south to Point 2 located at position 28°30′55.42″ N, 080°46′32.75″ W, then due west to the shoreline.
6. 3rd Weekend of March	Tavares Spring Thunder Regatta.	Classic Race Boat Association.	Lake Dora, Florida, waters 500 yards seaward of Wooten Park.
7. Palm Sunday in March or April.	Blessing of the Fleet—Jacksonville.	City of Jacksonville Office of Special Events.	St. Johns River, Jacksonville, Florida in the vicinity of Jacksonville Landing between the Main Street Bridge and Acosta Bride.
8. Palm Sunday in March or April.	Blessing of the Fleet—St. Augustine.	City of St. Augustine	St. Augustine Municipal Marina (entire marina), St. Augustine Florida.

TABLE TO § 100.701—Continued

No./date	Event	Sponsor	Location
9. 1st Full Weekend of April (Saturday and Sunday).	Mount Dora Yacht Club Sailing Regatta.	Mount Dora Yacht Club	Lake Dora, Mount Dora, Florida—500 feet off Grantham Point.
10. 3rd Saturday of April	Jacksonville City Championships.	Stanton Rowing Foundation.	Ortega River Race Course, Jacksonville, Florida; South of Timuquana Bridge.
11. 3rd weekend of April	Florida Times Union Redfish Roundup.	The Florida Times-Union	Sister's Creek, Jacksonville, Florida; All waters within a 100 yard radius of Jim King Park and Boat Ramp at Sister's Creek Marina, Sister's Creek.
12. 2nd Weekend in May	Saltwater Classic—Port Canaveral.	Cox Events Group	All waters of the Port Canaveral Harbor located in the vicinity of Port Canaveral, Florida encompassed within the following points: Starting at Point 1 in position 28°24′32″ N, 080°37′22″ W, then north to Point 2 28°24′35″ N, 080°37′22″ W, then due east to Point 3 at 28°24′35″ N, 080°36′45″ W, then south to Point 4 at 28°24′32″ N, 080°36′45″, then west back to the original point.
13. 1st Friday of May	Isle of Eight Flags Shrimp Festival Pirate Landing and Fireworks.	City of Fernandina Beach	All waters within a 500 yard radius around approximate position 30°40′15″ N, 81°28′10″ W.
14. 1st Saturday of May	Mug Race	The Rudder Club of Jacksonville, Inc.	St. Johns River; Palatka to Buckman Bridge.
15. 3rd Friday—Sunday of May.	Space Coast Super Boat Grand Prix.	Super Boat International Productions, Inc.	Atlantic Ocean in the vicinity of Cocoa Beach, Florida includes all waters encompassed within the following points: Starting at Point 1 in position 28°22′16″ N, 80°36′04″ W; thence east to Point 2 in position 28°22′15″ N, 80°35′39″ W; thence south to Point 3 in position 28°19′47″ N, 80°35′55″ W; thence west to Point 4 in position 28°19′47″ N, 80°36′22″ W; thence north back to origin.
16. 4th weekend of May	Memorial Day RiverFest	City of Green Cove Springs.	St. Johns River, Green Cove Springs, Florida; All waters within a 500-yard radius around approximate position 29°59′39″ N, 081°40′33″ W.
17. Last full week of May (Monday–Friday).	Bluewater Invitational Tournament.	Northeast Florida Marlin Association.	There is a no-wake zone in affect from the St. Augustine City Marina out to the end of the St. Augustine Jetty's 6 a.m.–8 a.m. and 3 p.m.–5 p.m. during the above days.
18. 2nd weekend of June	Hydro X Tour	H2X Racing Promotions	Lake Dora, Tavares, Florida; All waters encompassed within the following points: Starting at Point 1 in position 28°47′59″ N, 81°43′41″ W; thence south to Point 2 in position 28°47′53″ N, 81°43′41″ W; thence east to Point 3 in position 28°47′53″ N, 81°43′19″ W; thence north to Point 4 in position 28°47′59″ N, 81°43′19″ W; thence west back to origin.
19. 1st Saturday of June	Florida Sport Fishing Association Offshore Fishing Tournament.	Florida Sport Fishing Association.	Port Canaveral, Florida from Sunrise Marina to the end of Port Canaveral Inlet.
20. 2nd weekend of June (Saturday and Sunday).	Kingfish Challenge	Ancient City Game Fish Association.	There is a no-wake zone in affect from the St. Augustine City Marina in St. Augustine, Florida out to the end of the St. Augustine Jetty's 6 a.m.–8 a.m. and 3 p.m.–5 p.m.
21. 3rd Friday–Sunday of June.	Daytona Beach Grand Prix of the Sea.	Powerboat P1–USA	All waters of the Atlantic Ocean East of Cocoa Beach, Florida encompassed within the following points: Starting at Point 1 in position 29°14′60″ N, 81°00′77″ W; thence east to Point 2 in position 29°14′78″ N, 80°59′802″ W; thence south to Point 3 in position 28°13′860″ N, 80°59′76″ W; thence west to Point 4 in position 29°13′68″ N, 81°00′28″ W; thence north back to origin.
22. 3rd Saturday of July	Halifax Rowing Association Summer Regatta.	Halifax Rowing Association	Halifax River, Daytona, Florida, south of Memorial Bridge—East Side.
23. 3rd week of July	Greater Jacksonville Kingfish Tournament.	Jacksonville Marine Charities, Inc.	Jacksonville, Florida; All waters of the St. Johns River, from lighted buoy 10 (LLNR 2190) in approximate position 30°24′22″ N, 081°24′59″ W to Lighted Buoy 25 (LLNR 7305).
24. Last weekend of September.	Jacksonville Dragon Boat Festival.	In the Pink Boutique, Inc	St. John's River, Jacksonville, Florida. In front of the Landing, between the Acosta & Main Street bridges from approximate position 30°19′26″ N, 081°39′47″ W to approximate position 30°19′26″ N, 81°39′32″ W.

TABLE TO § 100.701—Continued

No./date	Event	Sponsor	Location
25. 2nd week of October	First Coast Head Race	Stanton Rowing Foundation.	St. Johns River and Arlington River, Jacksonville, Florida, starting near the Arlington Marina and ending on the Arlington River near the Atlantic Blvd. Bridge.
26. 1st weekend of November.	Hydro X Tour	H2X Racing Promotions	Lake Dora, Tavares, Florida; All waters encompassed within the following points: Starting at Point 1 in position 28°47′59″ N, 81°43′41″ W; thence south to Point 2 in position 28°47′53″ N, 81°43′41″ W; thence east to Point 3 in position 28°47′53″ N, 81°43′19″ W; thence north to Point 4 in position 28°47′59″ N, 81°43′19″ W; thence west back to origin.
27. 3rd Weekend of November.	Tavares Fall Thunder Regatta.	Classic Race Boat Association.	Lake Dora, Florida, waters 500 yards seaward of Wooten Park.
28. 2nd Saturday of December.	St. Johns River Christmas Boat Parade.	St. Johns River Christmas Boat Parade, Inc.	St. Johns River, Deland, Florida; Whitehair Bridge, Deland to Lake Beresford.
29. 2nd Saturday of December.	Christmas Boat Parade (Daytona Beach/Halifax River).	Halifax River Yacht Club	Daytona Beach, Florida; Halifax River from Seabreeze Bridge to Halifax Harbor Marina.
(d) COTP Zone Savannah; Special Local Regulations			
1. May, 2nd weekend, Sunday.	Blessing of the Fleet—Brunswick.	Knights of Columbus—Brunswick.	Brunswick River from the start of the East branch of the Brunswick River (East Brunswick River) to the Golden Isles Parkway Bridge.
2. 3rd full weekend of July	Augusta Southern Nationals Drag Boat Races.	Augusta Southern Nationals.	Savannah River, Augusta, Georgia, from the US Highway 1 (Fifth Street) Bridge at mile 199.5 to Eliot's Fish Camp at mile 197.
3. Last weekend of September.	Ironman 70.3	Ironman	All waters of the Savannah River encompassed within the following points: Starting at Point 1 in position 33°28′44″ N, 81°57′53″ W; thence northeast to Point 2 in position 33°28′50″ N, 81°57′50″ W; thence southeast to Point 3 in position 33°27′51″ N, 81°55′36″ W; thence southwest to Point 4 in position 33°27′47″ N, 81°55′43″ W; thence northwest back to origin.
4. 1st Saturday after Thanksgiving Day in November.	Savannah Harbor Boat Parade of Lights and Fireworks.	Westin Resort, Savannah	Savannah River, Savannah Riverfront, Georgia, Talmadge bridge to a line drawn at 146 degrees true from Dayboard 62.
5. 2nd Saturday of November.	Head of the South Regatta	Augusta Rowing Club	Savannah River, Augusta, Georgia; All waters within a moving zone, beginning at Daniel Island Pier in approximate position 32°51′20″ N, 079°54′06″ W, South along the coast of Daniel Island, across the Wando River to Hobcaw Yacht Club, in approximate position 32°49′20″ N, 079°53′49″ W, South along the coast of Mt. Pleasant, S.C., to Charleston Harbor Resort Marina, in approximate position 32°47′20″ N, 079°54′39″ W. There will be a temporary Channel Closer from 0730 to 0815 on June 01, 2013 between Wando River Terminal Buoy 3 (LLNR 3305), and Wando River Terminal Buoy 5 (LLNR 3315). The zone will at all times extend 75 yards in front of the lead safety vessel preceding the first race participants; 75 yards behind the safety vessel trailing the last race participants; and at all times extending 100 yards on either side of the race participants and safety vessels.

■ 3. Add § 100.703 to read as follows:

§ 100.703 Special Local Regulations; Recurring Marine Events, Sector St. Petersburg.

The following regulations apply to the marine events listed in Table 1 of this section. These regulations will be effective annually, for the duration of each event listed in Table 1. Annual notice of the exact dates and times of the effective period of the regulation with respect to each event, the geographical area, and details concerning the nature of the event and the number of participants and type(s) of vessels involved will be provided to the local maritime community through the Local Notice to Mariners, Broadcast Notice to Mariners, or both, well in advance of the events. If the event does not have a date listed, then the exact dates and times of the enforcement will be announced through a Notice of Enforcement in the **Federal Register**.

(a) *Definitions.* The following definitions apply to this section:

(1) *Designated Representative.* The term ''designated representative'' means Coast Guard Patrol Commanders, including Coast Guard coxswains, petty officers, others operating Coast Guard vessels, and Federal, state, and local officers designated by or assisting the Captain of the Port (COTP) St.

Petersburg in the enforcement of the regulated areas.

(2) *Spectators.* All persons and vessels not registered with the event sponsor as participants.

(b) *Event Patrol.* The Coast Guard may assign an event patrol, as described in § 100.40 of this part, to each regulated event listed in the table. Additionally, a Patrol Commander may be assigned to oversee the patrol. The event patrol and Patrol Commander may be contacted on VHF Channel 16.

(c) *Special Local Regulations.* (1) The COTP St. Petersburg or designated representative may forbid and control the movement of all vessels in the regulated area. When hailed or signaled by an official patrol vessel, a vessel in these areas shall immediately comply with the directions given. Failure to do so may result in expulsion from the area, citation for failure to comply, or both.

(2) The COTP St. Petersburg or designated representative may terminate the event, or the operation of any vessel participating in the event, at any time it is deemed necessary for the protection of life or property.

(3) Only event sponsor designated participants and official patrol vessels are allowed to enter the regulated area, unless otherwise authorized by the COTP St. Petersburg or designated representative.

(4) Spectators are only allowed inside the regulated area if they remain within a designated spectator area. Spectators may contact the COTP St. Petersburg or designated representative to request permission to enter, transit through, remain within, or anchor in the regulated area. If permission is granted, spectators must abide by the directions of the COTP St. Petersburg or a designated representative.

(d) *Event Delays or Termination.* The COTP St. Petersburg or designated representative may delay or terminate any event in this subpart at any time to ensure safety of life or property. Such action may be justified as a result of weather, traffic density, spectator operation, or participant behavior.

TABLE TO § 100.703—SPECIAL LOCAL REGULATIONS; RECURRING MARINE EVENTS, SECTOR ST. PETERSBURG

[Datum NAD 1983]

Date/time	Event/sponsor	Location	Regulated area
1. One Saturday in January. Time (Approximate): 11:30 a.m. to 2 p.m.	Gasparilla Invasion and Parade/Ye Mystic Krewe of Gasparilla.	Tampa, Florida	*Location:* A regulated area is established consisting of the following waters of Hillsborough Bay and its tributaries north of 27°51′18″ N and south of the John F. Kennedy Bridge: Hillsborough Cut "D" Channel, Seddon Channel, Sparkman Channel and the Hillsborough River south of the John F. Kennedy Bridge. *Additional Regulation:* (1) Entrance into the regulated area is prohibited to all commercial marine traffic from 9 a.m. to 6 p.m. EST on the day of the event. (2) The regulated area will include a 100 yard Safety Zone around the vessel JOSE GASPAR while docked at the Tampa Yacht Club until 6 p.m. EST on the day of the event. (3) The regulated area is a "no wake" zone. (4) All vessels within the regulated area shall stay 50 feet away from and give way to all officially entered vessels in parade formation in the Gasparilla Marine Parade. (5) When within the marked channels of the parade route, vessels participating in the Gasparilla Marine Parade may not exceed the minimum speed necessary to maintain steerage. (6) Jet skis and vessels without mechanical propulsion are prohibited from the parade route. (7) Vessels less than 10 feet in length are prohibited from the parade route unless capable of safely participating. (8) Vessels found to be unsafe to participate at the discretion of a present Law Enforcement Officer are prohibited from the parade route. (9) Northbound vessels in excess of 65 feet in length without mooring arrangement made prior to the date of the event are prohibited from entering Seddon Channel unless the vessel is officially entered in the Gasparilla Marine Parade. (10) Vessels not officially entered in the Gasparilla Marine Parade may not enter the parade staging area box within the following coordinates: 27°53′53″ N, 082°27′47″ W; 27°53′22″ N, 082°27′10″ W; 27°52′36″ N, 082°27′55″ W; 27°53′02″ N, 082°28′31″ W.
2. One Saturday in February. Time (Approximate): 9:00 a.m. to 9:00 p.m.	Bradenton Area River Regatta/City of Bradenton.	Bradenton, FL	Location(s) *Enforcement Area #1.* All waters of the Manatee River between the Green Bridge and the CSX Train Trestle contained within the following points: 27°30′43″ N, 082°34′20″ W, thence to position 27°30′44″ N, 082°34′09″ W, thence to position 27°30′00″ N, 082°34′04″ W, thence to position 27°29′58″ N, 082°34′15″ W, thence back to the original position, 27°30′43″ N, 082°34′20″ W. *Enforcement Area #2.* All waters of the Manatee River contained within the following points: 27°30′35″ N, 082°34′37″ W, thence to position 27°30′35″ N, 082°34′26″ W, thence to position 27°30′26″ N, 082°34′26″ W, thence to position 27°30′26″ N, 082°34′37″ W, thence back to the original position, 27°30′35″ N, 082°34′37″ W.

TABLE TO § 100.703—SPECIAL LOCAL REGULATIONS; RECURRING MARINE EVENTS, SECTOR ST. PETERSBURG—Continued

[Datum NAD 1983]

Date/time	Event/sponsor	Location	Regulated area
3. One weekend (Friday, Saturday, and Sunday) in March. Time (Approximate): 8:00 a.m. to 5:00 p.m.	Gulfport Grand Prix/Gulfport Grand Prix LLC.	Gulfport, FL	Location(s): (1) *Race Area.* All waters of Boca de Ciego contained within the following points: 27°44′10″ N, 082°42′29″ W, thence to position 27°44′07″ N, 082°42′40″ W, thence to position 27°44′06″ N, 082°42′40″ W, thence to position 27°44′04″ N, 082°42′29″ W, thence to position 27°44′07″ N, 082°42′19″ W, thence to position 27°44′08″ N, 082°42′19″ W, thence back to the original position, 27°44′10″ N, 082°42′29″ W. (2) *Buffer Zone.* All waters of Boca de Ciego encompassed within the following points: 27°44′10″ N, 082°42′47″ W, thence to position 27°44′01″ N, 082°42′44″ W, thence to position 27°44′01″ N, 082°42′14″ W, thence to position 27°44′15″ N, 082°42′14″ W.
4. One weekend (Saturday and Sunday) in June. Time (Approximate): 8:00 a.m. to 4:00 p.m.	St. Pete Beach Grand Prix of the Gulf/Powerboat P–1 USA, LLC.	St. Pete Beach, FL	Location: All waters of the Gulf of Mexico encompassed within the following points: 27°43′41″ N, 082°46′15″ W, thence to position 27°44′14″ N, 082°45′16″ W, thence to position 27°43′41″ N, 082°44′43″ W, thence to position 27°42′57″ N, 082°45′59″ W, thence back to the original position 27°43′41″ N, 082°46′15″ W.
5. One weekend (Saturday and Sunday) in July. Time (Approximate): 8:00 a.m. to 5:00 p.m.	Sarasota Powerboat Grand Prix/Powerboat P–1 USA, LLC.	Sarasota, FL	Location: All waters of the Gulf of Mexico contained within the following points: 27°18′44″ N, 082°36′14″ W, thence to position 27°19′09″ N, 082°35′13″ W, thence to position 27°17′42″ N, 082°34′00″ W, thence to position 27°16′43″ N, 082°34′49″ W, thence back to the original position, 27°18′44″ N, 082°36′14″ W.
6. One Saturday in September. Time (Approximate): 6:00 a.m. to 6 p.m.	Battle of the Bridges/Sarasota Scullers Youth Rowing Program.	Venice, FL	Location: All waters of the Intracoastal Waterway south of a line made connecting the following points: 27°06′15″ N, 082°26′43″ W, to position 27°06′12″ N, 082°26′43″ W, and all waters of the Intracoastal Waterway north of a line made connecting the following points: 27°03′21″ N, 082°26′17″ W, to position 27°03′19″ N, 082°26′15″ W.
7. One Sunday in September. Time (Approximate): 11:30 a.m. to 4:00 p.m.	Clearwater Offshore Nationals/Race World Offshore.	Clearwater, FL	Locations: (1) *Race Area.* All waters of the Gulf of Mexico contained within the following points: 27°58′34″ N, 82°50′09″ W, thence to position 27°58′32″ N, 82°50′02″ W, thence to position 28°00′12″ N, 82°50′10″ W, thence to position 28°00′13″ N, 82°50′10″ W, thence back to the original position, 27°58′34″ N, 82°50′09″ W. (2) *Spectator Area.* All waters of Gulf of Mexico seaward no less than 150 yards from the race area and as agreed upon by the Coast Guard and race officials. (3) *Enforcement Area.* All waters of the Gulf of Mexico encompassed within the following points: 28°58′40″ N, 82°50′37″ W, thence to position 28°00′57″ N, 82°49′45″ W, thence to position 27°58′32″ N, 82°50′32″ W, thence to position 27°58′23″ N, 82°49′53″ W, thence back to position 28°58′40″ N, 82°50′37″ W.
8. One Thursday, Friday, and Saturday in October. Time (Approximate): 10:00 a.m. to 5:00 p.m.	Roar Offshore/OPA Racing LLC.	Fort Myers Beach, FL	Locations: All waters of the Gulf of Mexico west of Fort Myers Beach contained within the following points: 26°26′27″ N, 081°55′55″ W, thence to position 26°25′33″ N, longitude 081°56′34″ W, thence to position 26°26′38″ N, 081°58′40″ W, thence to position 26°27′25″ N, 081°58′8″ W, thence back to the original position 26°26′27″ N, 081°55′55″ W.
9. One weekend (Friday, Saturday, and Sunday) in November. Time (Approximate): 8:00 a.m. to 6:00 p.m.	OPA World Championships/Englewood Beach Waterfest.	Englewood Beach, FL	Locations: (1) *Race Area.* All waters of the Gulf of Mexico contained within the following points: 26°56′00″ N, 082°22′11″ W, thence to position 26°55′59″ N, 082°22′16″ W, thence to position 26°54′22″ N, 082°21′20″ W, thence to position 26°54′24″ N, 082°21′16″ W, thence to position 26°54′25″ N, 082°21′17″ W, thence back to the original position, 26°56′00″ N, 082°21′11″ W. (2) *Spectator Area.* All waters of the Gulf of Mexico contained with the following points: 26°55′33″ N, 082°22′21″ W, thence to position 26°54′14″ N, 082°21′35″ W, thence to position 26°54′11″ N, 082°21′40″ W, thence to position 26°55′31″ N, 082°22′26″ W, thence back to position 26°55′33″ N, 082°22′21″ W. (3) *Enforcement Area.* All waters of the Gulf of Mexico encompassed within the following points: 26°56′09″ N, 082°22′12″ W, thence to position 26°54′13″ N, 082°21′03″ W, thence to position 26°53′58″ N, 082°21′43″ W, thence to position 26°55′56″ N, 082°22′48″ W, thence back to position 26°56′09″ N, 082°22′12″ W.

§§ 100.717, 100.718, 100.720, 100.722, 100.728, 100.734, 100.735, 100.736 and 100.740 [Removed]

■ 4. Remove §§ 100.717, 100.718, 100.720, 100.722, 100.728, 100.734, 100.735, 100.736 and 100.740.

Dated: January 8, 2020.

Matthew A. Thompson,

Captain, U.S. Coast Guard, Captain of the Port Sector St. Petersburg.

[FR Doc. 2020–00330 Filed 1–13–20; 8:45 am]

BILLING CODE 9110–04–P

FEDERAL COMMUNICATIONS COMMISSION

47 CFR Part 16

[GN Docket No. 19–309; FCC 19–120]

Modernizing Suspension and Debarment

AGENCY: Federal Communications Commission.

ACTION: Proposed rule.

SUMMARY: In this document, the Federal Communications Commission (the FCC or Commission) proposes to adopt new rules consistent with Office of Management and Budget Guidelines to Agencies on Government Debarment and Suspension (Nonprocurement)(the Guidelines). The Commission proposes that such new rules be applied to transactions under the Universal Service Fund (USF) and Telecommunications Relay Services (TRS) programs and the National Deaf-Blind Equipment Distribution Program (NDBEDP). The Commission also proposes certain modifications to the Guidelines, including as appropriate transitional mechanisms for situations in which the suspended or debarred entity may be the sole source for the service involved. The Commission proposes that any new rules for suspension and debarment be put into a new Part 16 in title 47 of the Code of Federal Regulations.

DATES:

Comments Due: February 13, 2020.

Reply Comments Due: March 16, 2020.

ADDRESSES: Electronic Filers: Comments may be filed electronically using the internet by accessing the ECFS: *https://www.fcc.gov/ecfs/.* Paper Filers: All filings must be addressed to the Commission's Secretary, Office of the Secretary, Federal Communications Commission. All hand-delivered or messenger-delivered paper filings for the Commission's Secretary must be delivered to FCC Headquarters at 445 12th St. SW, Room TW–A325, Washington, DC 20554. The filing hours are 8:00 a.m. to 7:00 p.m. Commercial overnight mail (other than U.S. Postal Service Express Mail and Priority Mail) must be sent to 9050 Junction Drive, Annapolis Junction, MD 20701. U.S. Postal Service first-class, Express, and Priority mail must be addressed to 445 12th Street SW, Washington, DC 20554.

FOR FURTHER INFORMATION CONTACT: Paula Silberthau, Attorney-Advisor, Administrative Law Division, Office of General Counsel, (202) 418–1874 or *Paula.Silberthau@fcc.gov.*

SUPPLEMENTARY INFORMATION: This is a summary of the Commission's Notice of Proposed Rulemaking, FCC 19–102, adopted on November 22, 2019 and released on November 25, 2019. The complete text of this document is available for inspection and copying during normal business hours in the FCC Reference Information Center, Portals II, 445 12th Street SW, Room CY–A257, Washington, DC 20554. To request materials in accessible formats for people with disabilities (Braille, large print, electronic files, audio format), send an email to *FCC504@fcc.gov* or call the Consumer & Governmental Affairs Bureau at (202) 418–0530 (voice), (202) 418–0432 (TTY). The complete text of the order also is available on the Commission's website at *https://www.fcc.gov.*

Synopsis

I. Introduction

1. The Commission oversees a number of critical support programs, including the Universal Service Fund (USF) programs, the Telecommunications Relay Services (TRS) programs, and the National Deaf-Blind Equipment Distribution Program (NDBEDP). Part of the Commission's role in overseeing these programs is protecting them from fraud, waste, and abuse. One important way the Commission does this is by identifying and barring from participation those who have abused or are likely to abuse these programs. This is why the Commission has, for its USF programs, implemented rules that suspend or debar those convicted of or found civilly liable for certain misconduct related to these programs.

2. While these rules have positive effects, this proceeding explores whether there is more that the Commission can do. Specifically, we propose to adopt new rules consistent with the Office of Management and Budget Guidelines to Agencies on Government Debarment and Suspension (Nonprocurement) (the Guidelines). The Guidelines provide additional tools—adopted by a number of other federal agencies across the government—that could enhance the Commission's ability to root out bad actors from participation in its support programs. If adopted, these measures could not only help the Commission to fulfill its responsibility of ensuring that the USF and TRS funds are well managed, efficient, and fiscally responsible, but may also assist us in bridging the digital divide by ensuring that fund expenditures, including support for expanded broadband deployment, are directed in the first instance to good actors who will use them only for their intended purpose. For these reasons, this document proposes to adopt new rules consistent with the Guidelines in lieu of the Commission's current rules, and to apply these new rules to the four USF programs, as well as to the Commission's TRS programs [1] and to the NDBEDP.[2]

II. Background

3. Most federal agencies have implemented the Guidelines—either wholesale or with modifications. The Commission stands apart from these agencies with its own rules for reasons that are largely historical. In 2003, when the Commission adopted its own suspension and debarment rules for certain USF programs, independent regulatory agencies like the Commission were expressly excluded from coverage under the Guidelines for Nonprocurement Debarment and Suspension that preceded the current Guidelines.[3] But when OMB adopted in 2005 the interim final changes to what have become known as the Guidelines, OMB modified this long-standing definition to remove the exclusion for independent agencies. As a result, independent regulatory agencies such as the Commission may participate in the

[1] For purposes of this document, the term ''TRS programs'' means all programs described in Chapter 64, subpt. F, of the Commission's rules, including without limitation telecommunications relay services, speech-to-speech relay services, and video relay services. TRS enables an individual who is deaf, hard of hearing, deaf-blind, or who has a speech disability to communicate by telephone or other device through the telephone system. TRS is provided in a variety of ways. Currently, interstate TRS calls and all internet Protocol (IP) based TRS calls, both intrastate and intrastate, are supported by the Fund.

[2] The NDBEDP provides equipment needed to make telecommunications, advanced communications, and the internet accessible to low-income individuals who are deaf-blind. For purposes of this document, we refer to the TRS program and the NDBEDP separately because they are certified and operated in different ways.

[3] These earlier guidelines, typically referred to as the ''Common Rules,'' were implemented through rules promulgated by executive agencies other than independent agencies. The Commission's exclusion was echoed in the subsequent OMB Notice of Proposed Rulemaking proposing revisions to those earlier guidelines.

government-wide suspension and debarment system by adopting the Guidelines. With that history in mind, we here briefly summarize these two debarment mechanisms and explain some of the key differences between them.

A. The Commission's Current Suspension and Debarment Rules

4. The Commission's current rules addressing suspension and debarment apply only to the USF programs.[4] In general, these rules cover a relatively narrow range of conduct and are clear-cut, mandatory, and virtually self-executing. The rules are non-discretionary and *require* the Commission to suspend or disbar any ''person'' [5] convicted (by plea or judgment) of, or found civilly liable for, the ''attempt or commission of criminal fraud, theft, embezzlement, forgery, bribery, falsification or destruction of records, making false statements, receiving stolen property, making false claims, obstruction of justice and other fraud or criminal offense arising out of activities associated with or related to the schools and libraries support mechanism, the high-cost support mechanism, the rural health care support mechanism, and the low-income support mechanism.'' A suspension or debarment of an entity applies to all organizational units of the entity unless the order specifies otherwise. A suspension immediately excludes a person from activities related to the USF programs, but only for a temporary period pending completion of the debarment proceedings. The debarment runs for the period specified by Commission order, generally three years.

5. Proceedings begin with a notice of suspension and proposed debarment issued by the Commission. The person subject to the suspension and proposed debarment has 30 days from the earlier of receipt of notice or publication in the **Federal Register** to challenge the Commission's action. The Commission must make a final ruling, overturning the original decision only in light of ''extraordinary circumstances,'' no later than 90 days after receipt of a petitioner's arguments. While a suspension or debarment is in effect, the Commission may, on motion by the affected party or *sua sponte,* reverse such a finding or limit its effect in light of extraordinary evidence. The default period for debarment is three years, though the Commission may, if it serves the public interest, set a longer period at the beginning or extend the period during which it is in effect.

B. The OMB Guidelines

6. The Guidelines establish the framework for a government-wide debarment and suspension system for nonprocurement programs.[6] The Guidelines generally provide for suspension or debarment based on a range of misconduct. This range includes not only convictions of or civil judgments for fraud or certain criminal offenses, but also violations of the requirements of public transactions ''so serious as to affect the integrity of an agency program'' (including willful or repeated violations).[7] In addition, the Guidelines provide that suspension or debarment could be warranted for ''[f]ailure to pay a single substantial debt, or a number of outstanding debts . . . owed to any Federal agency. . . .'' Finally, the Guidelines provide the discretion to suspend or debar for ''[a]ny other cause of so serious or compelling a nature that it affects [the party's] present responsibility.''

7. Suspensions under the Guidelines have prospective but immediate effect, and debarments are effective following a 30-day opportunity for a party to respond to a debarment notice. Once effective, an action to suspend or debar serves to automatically exclude the suspended or debarred party from new covered transactions government-wide, whether in procurement or nonprocurement programs or activities. For ongoing activities, ''a participant may continue to use the services of an excluded person as a principal'' if the participant was ''using the services of that person in the transaction before the person was excluded.'' The participant also has the option of discontinuing the excluded person's services and finding an alternative provider.

C. Differences Between the Guidelines and the Commission's Rules

8. The Commission's rules differ from the Guidelines in several key respects. The Commission's rules are clear-cut and mandatory, with little room for discretion and a targeted focus on a narrow set of misconduct; the Guidelines, by contrast, address a broader range of misconduct and provide federal agencies with substantial discretion to suspend and debar entities based on consideration of numerous factors. Here, we briefly review some of the key differences between these two debarment mechanisms.

9. *First,* the rules differ in scope and reach. While the Commission's rules apply only to its four USF programs, the Guidelines broadly cover all nonprocurement transactions (unless otherwise modified by agency-specific rules) including subsidies, grants, loans, or other ''payments for specified uses.'' The Guidelines also reach further down the supply chain, requiring that, before a primary tier participant enters into a covered transaction with another person at the next lower tier—for example, a subcontractor—the participant must verify that the person with whom it intends to do business is not excluded or disqualified.[8]

10. *Second,* the Guidelines provide greater discretion to agencies in determining which entity to debar and for what misconduct. As described above, the Guidelines consider a broader range of misconduct than the Commission's rules. They also do not require a prior court judgment or conviction. Thus, in contrast to the FCC's current rules, suspension or

[4] We note that a few Commission rules also mention ''disqualification'' from program participation as a possible remedy for unlawful conduct. The TRS program and NDBEDP provide for ''suspension'' or ''revocation'' of certification under sections 64.606(e) and 64.6207(h) of the Commission's rules. However, section 54.8 of the Commission's rules is the only provision that expressly provides for ''suspension'' and ''debarment.''

[5] Under section 54.8, a ''person'' is ''[a]ny individual, group of individuals, corporation, partnership, association, unit of government or legal entity, however organized.''

[6] Section 180.970 of the Guidelines defines ''nonprocurement transaction'' as ''any transaction, regardless of type (except procurement contracts),'' including but not limited to grants, cooperative agreements, scholarships, fellowships, contracts of assistance, loans, loan guarantees, subsidies, insurances, payments for specified uses, and donation agreements.'' Suspension and debarment rules for federal procurement contracts are contained in part 9 of the Federal Acquisition Regulation (FAR).

[7] The Guidelines also provide that the suspending officer may impose suspension only when immediate action is necessary to protect the public interest, and that official determines either that (1) the participant has been indicted for, or there is adequate evidence to suspect, an offense listed in section 180.800(a) of the Guidelines; or (2) there is adequate evidence to suspect the existence of any other cause for debarment listed in sections 180.800(b)–(d)) of the Guidelines.

[8] ''Exclusion'' generally refers to being suspended or debarred, as discussed in this Notice. ''Disqualification'' means that a person is prohibited from participating in specified Federal procurement or nonprocurement transactions as required under a statute, Executive order (other than Executive Orders 12549 and 12689) or other authority. The Guidelines allow for the inclusion of disqualified persons in the System for Award Management Exclusions and state the responsibilities of federal agencies and participants to check for disqualified persons before entering into covered transactions. The Guidelines do not, however, specify the transactions for which a disqualified person is ineligible, the entities to which a disqualification applies, or the process that a federal agency uses to disqualify a person, as those factors are dependent on the underlying statute, Executive order or regulation that caused the disqualification.

debarment actions under the Guidelines do not have to await completion of criminal or civil proceedings.[9] The Guidelines also allow an agency to impute conduct from an individual to an organization; from an organization to an individual or between individuals; or from one organization to another. Thus, action could be taken against an organization, not just a principal, or the reverse, in appropriate circumstances.

11. *Third,* the Guidelines provide greater flexibility in fashioning the terms of a suspension or debarment. The Guidelines afford a federal agency substantial discretion to suspend, based on adequate evidence, or debar, based on a preponderance of evidence, as determined in the discretion of the designated suspending or debarring official. The Guidelines also give a suspending official ''wide discretion'' to determine whether *immediate action* is necessary to protect the public interest.'' As a result, an agency may immediately prevent the suspended party from entering into *additional* transactions under its programs. The Guidelines also allow an agency head to grant an ''exception'' to allow an excluded person to participate in a particular transaction.

12. *Fourth,* the Guidelines establish a government-wide debarment system. While determinations under the Commission's rules apply only to the Commission, the Guidelines provide for a government-wide system with reciprocity among federal agencies that adopt rules consistent with the Guidelines. This means that a party that has been suspended or debarred by *another* agency and placed on the government-wide System for Award Management Exclusions (commonly known as the ''SAM Exclusions'') maintained by the General Services Administration (GSA)[10] would be barred from participation in covered transactions unless an exception were granted for good cause by the agency head.[11] To effect this reciprocity, the Guidelines impose affirmative disclosure requirements on ''participants'' in government programs or other covered transactions.[12] Before entering into a covered transaction, participants must notify the agency if they are presently excluded or disqualified. Those who are excluded from government programs will be listed on the System for Award Management Exclusions. In addition, primary tier participants (*i.e.,* generally those participants who transact business directly with a federal agency) must advise the agency whether they have been convicted of certain offenses within three years, indicted, or terminated from public transactions. Further, under the Guidelines, a federal agency must check to see whether a person is excluded or disqualified before entering directly into a covered transaction or approving a principal in that transaction, and before approving any lower tier participant or principal thereof (if agency approval is required).

13. This is not an exhaustive list of the differences between the Guidelines and the Commission's rules. We strongly encourage interested parties to review the OMB Guidelines, which can be found at 2 CFR part 180, in addition to this document.

III. Discussion

14. We propose to adopt new rules consistent with the Guidelines. Doing so would impose the following new mechanisms and obligations, among others: (1) New procedural requirements that would allow the agency to respond quickly to evidence of misconduct through a suspension mechanism prior to any debarment, while providing for a later evidentiary proceeding that will permit the Commission to consider a broader range of wrongful conduct than is now considered; (2) requirements that program participants confirm that those with whom they do business are not already excluded or disqualified from government activities; and (3) reciprocity within the Government-wide system preventing a party that is suspended or debarred by *another* agency from participation in covered Commission transactions unless the Commission grants an exception for good cause. We seek comment on this proposal.

15. We propose to adopt new debarment and suspension rules for several reasons. *First,* adopting the Guidelines would allow the Commission to take remedial action before the issuance of a judgment or conviction, based on a broader range of factors. As explained above, under our current rules suspension and debarment are triggered only by a final conviction or civil judgment showing malfeasance arising from or related to USF programs. The Commission's current rules allow an entity to be subject to a Notice of Apparent Liability (NAL) supported by substantial evidence, or to enter into an executed Consent Decree with an admission of liability. However, even undisputed evidence supporting an NAL or Consent Decree, no matter how egregious, would not constitute sufficient grounds for a suspension or debarment under our rules, which require a judgment or conviction related to USF programs. In addition, many False Claims Act lawsuits arising from alleged wrongdoing in USF programs settle before final judgment, removing those cases from the reach of the Commission's suspension and debarment rules. Even if a conviction or civil judgment is pursued for malfeasance in a USF program, the litigation typically takes many years, and our current rules preclude a suspension or debarment while litigation is pending. Thus, while the Commission anticipated that the mandatory nature of the current debarment rules would be a strong tool to prevent fraud in the USF programs, the narrow trigger for suspension and debarment appears to be a significant constraint on the Commission's authority to protect the USF through those rules, in contrast to the more flexible approach under the Guidelines.[13] Finally, as noted above,

[9] Under the Guidelines the suspending official must (1) have adequate evidence that there may be a cause for debarment of a person and (2) conclude that immediate action is necessary to protect the federal interest. The Guidelines also provide that ''[i]n deciding whether immediate action is needed to protect the public interest, the suspending official has wide discretion.'' If legal or debarment proceedings are initiated at the time of, or during suspension, the suspension may continue until the conclusion of those proceedings. Otherwise, a suspension may not exceed 12 months. The Guidelines define ''legal proceedings'' to mean ''any criminal proceeding or any civil judicial proceeding, including a proceeding under the Program Fraud Civil Remedies Act, to which the Federal Government or a State or local government or quasigovernmental authority is a party. The term also includes appeals from those proceedings.'' In addition, if the legal standard is satisfied, the agency may suspend a party during an investigation.

[10] The System for Award Management records for an entity, including its exclusion status, can be searched at *https://www.sam.gov/SAM/pages/public/searchRecords/search.jsf.*

[11] As proposed in this Notice, covered transactions would be those under the USF or TRS programs or the NDBEDP.

[12] A participant is broadly defined as ''any person who submits a proposal for or who enters into a covered transaction, including an agent or representative of a participant.'' The Guidelines refer to two categories of ''covered transactions''—those which are in the ''primary tier, between a Federal agency and a person'' and those in a ''lower tier, between a participant in a covered transaction and another person.'' Obligations under the Guidelines may vary depending upon whether a party is a primary tier participant or lower tier participant. Therefore, we propose below clarifications for several Commission programs to identify which persons would be considered ''primary tier'' participants within the meaning of any new rules.

[13] After the adoption of our current suspension and debarment rules in 2003, the Commission to date has debarred 49 persons or entities, with only one remaining currently debarred. Of those debarred, 46 have been debarred for activities pertaining to the E-rate program and 3 for activities under the Lifeline program. Despite numerous active investigations of wrongdoing in Commission

malfeasance in other government programs or even criminal convictions outside the realm of the USF are not factors that the Commission may consider under the current rules. These and other limitations on our suspension and debarment procedures would be eliminated by adopting new rules consistent with the Guidelines.

16. *Second,* the Guidelines require that persons make advance disclosures regarding their exclusion or disqualification status prior to entering into covered transactions with federal agencies and participants in federal programs. More specifically, a person who enters into a covered transaction with a federal agency must disclose: Whether they are presently excluded or disqualified; recent convictions, civil judgments, indictments, or civil charges; and recent defaults on public transactions. Lower tier transactions (*e.g.,* between a program participant and a consultant) require only a disclosure of exclusion or disqualification status. These disclosures afford participants in transactions more information by which to evaluate whether it is appropriate or prudent to do business with the person making the unfavorable disclosures.

17. *Third,* under the Guidelines, the Commission would have authority, like other government agencies, to evaluate the wrongful or fraudulent conduct of companies or individuals in *other* dealings with the government, and to use the possibility of government-wide, rather than program-specific, suspension or debarment as a deterrent to bad actors. In contrast, under the Commission's current rules, even a company or individual debarred *government-wide* for criminal or other unlawful conduct currently could not be barred from participation in the Commission's USF programs without a prior judgment or conviction related to a USF program. Furthermore, a party suspended or debarred from the USF programs under our current rules could still participate in other Commission programs such as TRS or NDBEDP; bid for procurement contracts with the Commission; and participate in both procurement and nonprocurement programs with other government agencies.

18. We seek comment on the analysis above. Would adopting suspension and debarment rules consistent with the Guidelines offer the benefits described? Are there costs associated with adopting such rules—for example, that broader rules allowing for more agency greater discretion might be create regulatory uncertainty or be more difficult to administer—that might outweigh these benefits? Would adopting these rules result in unintended consequences not discussed here? We seek comment on these questions, as well as our proposal to adopt suspension and debarment rules consistent with the Guidelines.

19. Following the practice of other agencies, we propose to adopt rules consistent with the Guidelines by reference to the codified Guidelines, and to supplement the Guidelines through FCC-specific regulations, including rules addressing those matters for which the Guidelines give each agency discretion. We note that other federal agencies have adopted the bulk of the Guidelines with limited changes, and we propose to do the same here. In the remainder of this document, we propose supplemental rules and seek comment on how to implement the Guidelines in a manner that accommodates concerns that may be unique to the Commission's programs.

A. Overview of Supplemental Rules

20. Our supplemental proposals fall into three areas. *First,* we propose to apply the suspension and debarment rules to a broader category of entities than are now covered, by defining ''covered transactions'' as including conduct taken by participants in the USF and TRS programs and the NDBEDP, and by including as covered transactions additional tiers of contracts involving contractors, subcontractors, suppliers, consultants, or their agents or representatives that are participating in these programs. For the reasons discussed below, we propose that all other agency programs or transactions be exempted from the rules at this time.

21. *Second,* we propose to adopt requirements that program participants confirm that those with whom they do business are not already excluded or disqualified from government activities. We note that such confirmation is consistent with the Guidelines and many entities who participate in federal grant programs or seek federal contracts should already be familiar with the process. We also seek comment on possible exceptions and how to implement the principle of reciprocity, which would prevent a party that is suspended or debarred by *another* agency from participation in covered Commission transactions.

22. *Third,* again consistent with the Guidelines, we propose new procedural requirements that would allow the agency to respond quickly to evidence of misconduct through a suspension mechanism, while providing for an evidentiary proceeding, evaluating a broader range of wrongful conduct than is now considered,[14] prior to any disbarment.

23. We seek comment on these supplemental proposals. We also seek comment generally on any policies or procedures that we should adopt if we were to implement the Guidelines, and in particular what procedures would be ''consistent with the [OMB] guidance.'' We seek comments about any other changes to our rules that might be appropriate should we choose to adopt rules consistent with the Guidelines, including our proposed supplemental rules, particularly any conforming changes that may be necessary, including modifications of forms for Commission programs, inclusion of additional certifications, and such other changes that may be necessary or helpful in implementing any new suspension and debarment rules. In particular, we seek comment on any changes required with respect to our rules for the contents of applications to participate in competitive bidding to receive auctioned support through covered transactions.

24. We also invite comment on the experiences of other agencies responsible for overseeing large programs that have applied the Guidelines. Have other agencies adopted the Guidelines largely intact, or are modifications commonly adopted so that suspension and debarment processes reflect the unique nature of the programs and missions the agencies oversee? Are there lessons learned by other agencies that could inform the Commission's adoption of expanded suspension and debarment rules consistent with the Guidelines?

25. While this document focuses on areas where we propose to supplement or deviate from the Guidelines, interested parties who believe the Commission should consider other changes to the Guidelines in its supplemental regulations should set forth their proposals, and the rationales supporting the proposed change, with specificity.

programs, including several cases implicating the False Claims Act, there have been no debarments since 2015, in large measure due to the constraints imposed by our current rules requiring a judgment or conviction as a prerequisite to a Commission suspension or debarment.

[14] The Guidelines provide federal agencies with substantial discretion to suspend and debar participants based on consideration of numerous factors. Moreover, through imputation rules, action could be taken against an organization, not just a principal, or the reverse, in appropriate circumstances. The imputation rules too would plug a gap in the Commission's current suspension and debarment mechanism.

B. Covered Transactions and Disclosure Requirements

26. *Generally.* The Guidelines define ''non-procurement transactions'' as ''any transaction, regardless of type (except procurement contracts),'' including but not limited to grants, cooperative agreements, scholarships, fellowships, contracts of assistance, loans, loan guarantees, subsidies, insurances, payments for specified uses, and donation agreements. Notwithstanding this definition, the Guidelines provide flexibility to agencies to determine which non-procurement transactions should be covered by their suspension and debarment rules. For example, the Guidelines specifically exclude from their scope any non-procurement transaction that is exempted by a federal agency's regulation. The Guidelines also exclude by default any ''permit, license, certificate, or similar instrument issued as a means to regulate public health, safety, or the environment,'' unless a federal agency specifically designates it to be a covered transaction.

27. If the Commission implements the Guidelines, should all transactions covered by the OMB definitions be included within the suspension and debarment regime? Are there additional types of transactions that should be included in addition to the examples provided in the Guidelines? Are there additional program-specific clarifications that should be made—for example, should the Commission clarify that Lifeline enrollment representatives who enroll individuals in the Lifeline program are executing covered transactions because enrollment is required before the service provider can claim a subsidy, or is that sufficiently clear from the Guidelines? Conversely, are there specific Commission nonprocurement transactions or programs that should be exempted from coverage? [15] For example, are there some programs or activities that should be exempted because remedies other than suspension or debarment (*e.g.,* license revocation) may be more appropriate? Commenters should identify specific transactions that should be included as covered transactions or exempted from the proposed suspension and debarment rules and provide the rationale for that recommendation.

28. *USF, TRS, and NBDEDP as covered transactions.* The Commission's primary permanent nonprocurement programs are the USF and TRS programs. In 2018, disbursements totaled $8.33 billion for USF programs and $1.4 billion [16] for TRS. We propose that all transactions under the USF and TRS programs be considered covered transactions under any new rules, as well as transactions under the NDBEDP, and that all other Commission transactions be exempt from those rules.[17] We tentatively conclude that application of the suspension and debarment rules to these programs will improve the sustainability of their funding for the benefit of those whom the programs serve. We seek comment on this proposal, as well as this tentative conclusion. More specifically, under the TRS programs and NDBEDP, the Commission grants TRS and NDBEDP participants authorization to provide services and equipment pursuant to certifications and reimburses TRS providers and NDBEDP certified programs for services and equipment provided to beneficiaries. We invite comment on the benefits of applying the suspension and debarment rules to the TRS programs and to the NDBEDP.

29. *General exemption for all other transactions, including authorizations and licenses.* The Guidelines primarily, but not exclusively, focus on transactions that involve a transfer of Federal funds to a non-Federal entity.[18] The Guidelines also exclude by default from the definition of ''covered transaction'' any ''permit, license, certificate, or similar instrument issued as a means to regulate public health, safety, or the environment,'' unless a federal agency specifically designates it to be a covered transaction. Consistent with the framework in the Guidelines, we propose to exclude all transactions other than those involving the USF, TRS, and NDBEDP from the scope of our proposed rules, such as applications for section 214 authorizations, equipment authorizations, and broadcast and spectrum licenses issued by the Commission. The Communications Act of 1934, as amended (Communications Act) and the Commission's implementing regulations govern the qualifications of applicants for such licenses and authorizations and the standards for revocation of the same. Similarly, we propose to exclude all transactions to or from licensees and those with spectrum usage rights (excluding, of course, those USF, TRS, and NDBEDP transactions where such an entity happens to be a participant), such as incentive auction payments or repacking payments.[19] Such payments should not be ''covered transactions'' that might be stopped by suspension or debarment rules as the public interest is best served by facilitating spectrum usage right relinquishments or repacking in such circumstances—and the statutes and rules regarding the collection of any outstanding debts still apply and provide more appropriate remedies to protect these payments.[20] We seek comment on this proposal.

30. The Guidelines, unless otherwise expanded by agency rule, apply to two categories of transactions: A ''primary tier between a federal agency and a person''; and a ''lower tier, between a participant in a covered transaction and another person.'' Both primary tier and lower tier participants must disclose whether they, or any of their principals, are excluded or disqualified. Primary tier participants, however, must also disclose to the federal agency certain convictions, civil judgments, indictments, other criminal or civil charges, or defaults on public transactions of the participant or any of their principals.

31. Agencies have some discretion within the parameters of the Guidelines to designate primary versus lower tier participants, and to expand the tiers that would be considered to be ''lower tier.'' [21] In this section, we propose to

[15] We note that procurement contracts awarded directly by a federal agency would not be considered ''covered transactions'' under the nonprocurement government-wide guidance for suspension and debarment. However, where non-federal participants in nonprocurement transactions award contracts for goods or services, such contracts would be deemed to be covered transactions if the amount of the contract equals or exceeds $25,000.

[16] Total disbursements for the NDBEDP, which come from the interstate TRS Fund, are limited to $10 million annually.

[17] In its most recent audit of the Commission's compliance with the Improper Payments Elimination and Recovery Improvement Act, the FCC's Inspector General listed nine programs that make disbursements under the direction of the Commission and its administrators: The four USF programs; the administrative costs of the Universal Service Administrative Company (USAC), the USF administrator; TRS; the North American Numbering Plan; payments related to the broadcast incentive auction (the TV Broadcaster Relocation Fund); and FCC operating expenses generally. In the report, OIG noted that the Commission had identified three of the USF programs and the TRS program as being susceptible to the risk of significant improper payments.

[18] The guidelines define ''nonprocurement transaction'' to include, among other things, grants, loans, loan guarantees, and subsidies. However, it is not necessary that a nonprocurement transaction include a transfer of Federal funds.

[19] As noted, this exclusion, of course, would not apply to those USF, TRS, and NDBEDP transactions where such an entity is a participant.

[20] Thus, other provisions protect against payments to parties with existing debts to the Commission and other federal government entities.

[21] More specifically, the Guidelines also include as ''covered transactions'' any contract for goods and services awarded by a participant in a nonprocurement transaction covered under § 180.210 that is expected to equal or exceed

designate certain actors in the USF and TRS programs and the NDBEDP as primary tier participants, and others as lower tier participants. We also propose, consistent with the Guidelines, to designate certain entities who do not directly contract with the primary tier participant (for example, subcontractors) as lower tier participants if they meet certain criteria.[22] Before we do so, however, we set forth our proposals on what would constitute a ''principal.''

32. *Definition of* ''principal.'' The Guidelines define ''principal'' to mean (a) an ''officer, director, owner, partner, principal, investigator, or other person . . . with management or supervisory responsibilities'' or (b) a ''consultant or other person, whether or not employed by the participant or paid with Federal funds, who (1) [i]s in a position to handle Federal funds; (2) [i]s in a position to influence or control the use of those funds; or (3) [o]ccupies a technical or professional position capable of substantially influence the development or outcome of an activity [in a transaction].'' The Guidelines further state that an agency may ''[i]dentify specific examples of types of individuals who would be 'principals' under the Federal agency's nonprocurement programs and transactions, in addition to the types of individuals specifically identified above.''

33. We propose that in addition to those persons defined as principals under the Guidelines, the term ''principal'' shall also mean ''any person who has a critical influence on, or substantive control over, a covered transaction, whether or not employed by the participant.'' Persons who may have a critical influence on, or substantive control over, a covered transaction could include without limitation: management and marketing agents, accountants, consultants, investment bankers, engineers, attorneys, and other professionals who are in a business relationship with participants in connection with a covered transaction under an FCC program.[23] We propose this expansion of the definition to ensure that all persons who have substantial influence on or control over a covered transaction may be considered ''principals'' even if they do not satisfy any of the three prongs in the Guidelines. For example, a person that causes violations of rules applicable to a party's competitive bidding evaluation might not be ''influenc[ing] the development or outcome of *an activity* required to *perform* the covered transaction'', yet that person could merit a debarment. This broadened definition of ''principal'' would afford the Commission the authority to consider such conduct. Commenters should identify any other categories of persons who should be considered ''principals'' in addition to those discussed above.

34. *Primary and lower tier participants for the USF and TRS programs and the NDBEDP—summary.* Our proposed designations for the programs are summarized in the chart below.

	Primary tier participants	Lower tier participants
High-Cost	Carriers	Contractors, subcontractors,[24] suppliers, consultants or their agents or representatives for High-Cost-supported transactions, if: (1) such person has a material role relating to, or significantly affecting, claims for disbursements related to the program; (2) such party is considered a ''principal''; or (3) the amount of the transaction is expected to be at least $25,000.
Lifeline	Carriers	Any participant in the Lifeline program (except for the primary tier carrier), regardless of tier or dollar value, that is reimbursed based on the number of Lifeline subscribers enrolled, commissions, or any combination thereof. Contractors, subcontractors, suppliers, consultants, or their agents or representatives and third-party marketing organizations for Lifeline-supported transactions, if (1) such person has a material role relating to, or significantly affecting, claims for disbursements related to the program; (2) such party is considered a ''principal''; or (3) the amount of the transaction is expected to be at least $25,000.
E-Rate	Schools and Libraries Form 471 Service Providers.	Contractors, subcontractors, suppliers, consultants, or their agents or representatives for E-Rate-supported transactions, if (1) such person has a material role relating to, or significantly affecting, claims for disbursements related to the program; (2) such person is considered a ''principal''; or (3) the amount of the transaction is expected to be at least $25,000.
RHC	Health Care Providers Form 462/466 Service Providers.	Contractors, subcontractors, suppliers, consultants, or their agents or representatives for RHC-supported transactions, if (1) such person has a material role relating to, or significantly affecting, claims for disbursements related to the program; (2) if such party is considered a ''principal''; or (3) the amount of the transaction is expected to be at least $25,000.
TRS NDBEDP	Service Providers	Contractors, subcontractors, suppliers, consultants, or their agents or representatives for TRS- or NDBEDP-supported transactions, if: (1) such person has a material role relating to, or significantly affecting, claims for disbursements related to the program; (2) such person is considered a ''principal''; or (3) the amount of the transaction is expected to be at least $25,000.

$25,000, or any contract requiring the consent of an official of a federal agency.

[22] Sections 180.25(b)(2) and 180.220(c) of the Guidelines provide agencies with the option to include as ''covered transactions an additional tier of contracts awarded under covered nonprocurement transactions.'' The Guidelines also contain an Appendix-Covered Transactions, with diagrams illustrating tiers of covered transactions.

[23] This expanded definition of the term ''Principal'' draws upon a supplement to the government-wide definition adopted by the Department of Housing and Urban Development (HUD).

[24] Under the Guidelines, subcontractors include suppliers of goods and services.

35. *Primary and lower tiers—High-Cost Programs.* For the High-Cost programs, we propose that the primary tier participant will be the carrier receiving support. We propose that lower tier participants include contractors, subcontractors, suppliers, consultants, or their agents or representatives for High-Cost-supported transactions, regardless of the dollar value of the contract or agreement, if (1) such person has a material role relating to, or significantly affecting, claims for disbursements related to the High-Cost program, or (2) such person is considered a ''principal.'' [25] We also propose that contractors, subcontractors, suppliers, consultants, or their agents or representatives be treated as lower tier participants for all USF-supported transactions, including High-Cost-supported transactions, if the amount of the transaction is expected to be at least $25,000.

36. *Primary* and *lower tiers—Lifeline Program.* Under the Lifeline program, carriers can submit consumer Lifeline applications to the National Verifier and are in the best position to have up-to-date information on customer activation and use of their Lifeline service. In addition, the carrier submits requests for payment to the USF Administrator and is in the best position to carry out the obligations of primary tier participants under the Guidelines. In contrast, the direct interaction of low-income consumers with the Commission or the USF Administrator is incidental. We propose that these beneficiaries not be considered primary or lower tier participants. Therefore, in the Lifeline program, we propose that the primary tier participant will be the carrier receiving support.

37. We propose three categories of lower tier participants in the Lifeline program. First, we propose to include parties (except for the primary tier Lifeline carrier) to any contract or award in which a person is reimbursed based on the number of Lifeline subscribers enrolled, by commission, or any combination thereof, regardless of tier or dollar value. Second, we propose that lower tier participants would include contractors, subcontractors, suppliers, consultants, or their agents or representatives and third-party marketing organizations for Lifeline-supported transactions, regardless of the dollar value of the contract or agreement, if (1) such person has a material role relating to, or significantly affecting, claims for disbursements related to the Lifeline program, or (2) such person is considered a ''principal.'' Finally, we propose that contractors, subcontractors, suppliers, consultants, or their agents or representatives and third-party marketing organizations be treated as lower tier participants for Lifeline-supported transactions, if the amount of the transaction is expected to be at least $25,000.

38. *Primary and lower tiers—E-Rate Program.* In the E-Rate program, after a school, library, or consortium enters into a signed contract or other legally binding agreement for services eligible for E-Rate discounts, the school, library, or consortium will identify the selected service provider using FCC Form 471. For the E-Rate program, we propose that both the program applicant (the school, library, or consortium) and the service provider(s) selected by the applicant (as indicated on FCC Form 471) be designated as primary tier participants. Extending the primary tier designation to applicants will allow us to obtain the more extensive primary tier disclosures from the applicants themselves, while also ensuring that the applicants will verify during their selection process that a service provider is not excluded or disqualified. We also propose that the service providers selected by the applicant schools, libraries, and consortia also be considered primary tier participants, regardless of whether they submit invoices directly to USAC. The experience of the Commission is that service providers may often be responsible for waste, fraud, and abuse, and therefore the imposition of the more substantial primary tier obligations (particularly disclosure requirements) on these entities would best achieve the Commission's goals of protecting federal funds. We seek comment on this proposal.

39. Under the E-Rate programs, schools and libraries may create ''consortia'' that can seek competitive bids or E-rate funding on behalf of all their members. When schools and libraries act through consortia, we propose that the consortium itself, acting through its lead member, would be a primary tier participant, along with the member schools or libraries. However, in considering any proposed suspension or debarment action, we anticipate that the suspension and debarring officer should evaluate which particular school or library consortium member was responsible for the bad conduct (in many cases, this may be the lead member) and direct the suspension and debarment orders to those responsible for the bad acts, rather than to all consortium members. We seek comment on this proposal and how best to implement the Guidelines in this context.

40. Finally, we propose that lower tier participants for the E-Rate program include contractors, subcontractors, suppliers, consultants, or their agents or representatives (with the exception of the service provider(s) designated on FCC Form 471, which would be treated as a primary tier participant) for USF-supported E-Rate transactions. We propose that all such persons be treated as lower tier participants, regardless of the dollar value of their contract or agreement, if (1) they have a material role relating to, or significantly affecting, claims for disbursements related to the E-Rate program, or (2) they are considered a ''principal.'' We also propose that such persons be treated as lower tier participants for all other E-Rate-supported transactions if the amount of the transaction is expected to be at least $25,000.

41. *Primary and lower tiers—Rural Health Care Program.* We propose a structure for the RHC program that is substantially similar to the E-Rate program. After an individual health care provider (HCP) or a consortium enters into a signed contract or other legally binding agreement for services eligible for RHC support, the HCP or consortium will identify the selected service provider using FCC Form 462 or 466. As with the E-Rate program, we propose that both the program applicant and the service provider(s) selected by the applicant (as indicated on FCC Form 462 or 466) be designated as primary tier participants, for the reasons discussed above.

42. Similarly, we propose that a consortium applicant, acting through its lead entity, would be the primary tier participant, along with its member HCPs, but that the suspension and debarring officer should evaluate which particular consortium member (for example, the lead entity) was responsible for the bad conduct and direct the suspension and debarment orders to those responsible for the bad acts, rather than to all consortium members.

43. Finally, as with the E-Rate program, we propose that lower tier participants for the RHC program include contractors, subcontractors, suppliers, consultants, or their agents or

[25] Our proposed new rules would provide: ''The term 'Principal' means, in addition to those individuals described at 2 CFR 180.995, any person who has a critical influence on, or substantive control over, a covered transaction, whether or not employed by the participant or paid with federal funds. Persons who have a critical influence on, or substantive control over, a covered transaction may include, but are not limited to: Management and marketing agents, accountants, consultants, investment bankers, engineers, attorneys, and other professionals who are in a business relationship with participants in connection with a covered transaction under an FCC program'').

representatives (with the exception of the service provider(s) designated on FCC Forms 462 or 466, which would be treated as a primary tier participant) for USF-supported RHC program transactions. We propose that all such persons be treated as lower tier participants, regardless of the dollar value of their contract or agreement, if (1) they have a material role relating to, or significantly affecting, claims for disbursements related to the RHC program, or (2) they are considered a ''principal.'' We also propose that contractors (except for the service provider designated on FCC Forms 462 or 466), subcontractors, suppliers, consultants, or their agents or representatives be treated as lower tier participants for all other RHC-supported transactions if the amount of the transaction is expected to be at least $25,000. We seek comment on this proposal and how best to implement the Guidelines in this context.

44. *Primary and lower tiers—TRS programs and NDBEDP.* We propose that in the TRS programs and the NDBEDP, the service and equipment providers receiving payments shall be deemed the primary tier participants. In these programs, the service and equipment providers evaluate the qualifications of customers to participate in the programs. In addition, the service (or equipment) providers submit requests for payment to the program administrators and are in the best position to carry out the obligations of primary tier participants under the Guidelines. For the TRS programs (other than TRS that is provided through state programs) and the NDBEDP, the primary tier participants would be the certificated entities that are reimbursed by the Commission and the TRS Fund administrator for providing services and equipment under the covered transactions. For TRS that is provided through state TRS programs, the primary tier participants would be the TRS providers that are authorized by each state to provide intrastate TRS under the state program and that, accordingly, are compensated by the TRS Fund for the provision of interstate TRS. For these programs, are there certain types of participants that the rules should treat differently? We note that, for the NDBEDP, some participants are state or local governments, and others are non-profits. Are there reasons why participants that are state or local governments or non-profit entities would require different treatment under the Guidelines and the rules we propose in this document? In contrast to the service providers, the direct interaction of TRS and NDBEDP beneficiaries (*i.e.,* individuals with disabilities) with the FCC or the administrators is incidental. Moreover, because beneficiaries (*i.e.,* individuals with disabilities) in the TRS program and NDBEDP do not directly submit applications to the program administrators, we propose that these beneficiaries not be considered either primary or lower tier participants, and not be subject to the debarment rules. We also note that the burden of imposing lower tier obligations on these individual beneficiaries would be substantial and their obligations under the rules, if they were considered participants, could well be beyond their ability or resources to carry out.

45. Consistent with the USF programs, we propose that lower tier participants for the TRS programs and the NDBEDP include contractors, subcontractors, suppliers, consultants, or their agents or representatives for TRS- or NDBEDP-supported transactions. We propose that all such persons be treated as lower tier participants, regardless of the dollar value of their contract or agreement with the service provider, if (1) they have a material role relating to, or significantly affecting, claims for disbursements related to the TRS or NDBEDP programs, or (2) they are considered a ''principal.'' We also propose that contractors, subcontractors, suppliers, consultants, or their agents or representatives be treated as lower tier participants for all other TRS- or NDBEDP-supported transactions if the amount of the transaction is expected to be at least $25,000. We seek comment on this proposal.

46. *Transactions with the USF, TRS Fund, and NDBEDP Administrators.* We also propose adoption of a clarification to section 180.200 of the Guidelines explaining that covered transactions include not only transactions between a person and the Commission, but also any transactions between a person and the administrators of the USF and TRS programs and the NDBEDP, when those entities are acting as agents of the Commission for purposes of administering the programs. We seek comment on this proposal.

47. As noted, the Guidelines impose important disclosure requirements on both primary and lower tier participants. In addition to the discussion in this section, we refer interested parties to the Guidelines in 2 CFR part 180, subpart C (Responsibilities of Participants Regarding Transactions Doing Business with Other Persons). We note that entities who participate in federal grant programs (*e.g.,* schools, libraries, or rural health care providers) or seek federal contracts (*e.g.,* service providers) should already be familiar with similar requirements. As noted above, we propose to exclude individual beneficiaries in the Lifeline and TRS programs and the NDBEDP (*i.e.,* low-income individuals and individuals with disabilities) from these requirements.

48. *Primary tier participants.* Disclosures required of *primary tier participants* (*i.e.,* those who deal directly with the agency or its agents by submitting a proposal for, or entering into, a covered transaction) are extensive. They must not only advise the agency if they are presently excluded or disqualified, but must also state whether the participant or any of its principals for the transaction ''have been convicted within the preceding three years of any of the offenses listed in § 180.800(a) or had a civil judgment rendered against [them] for one of those offenses within that time period,'' ''are presently indicted for or otherwise criminally or civilly charged by a governmental entity (Federal, State or local) with commission of any of the offenses listed in § 180.800(a),'' or ''[h]ave had one or more public transactions . . . terminated within the preceding three years for cause or default.''

49. We anticipate that disclosure requirements could be implemented through changes to existing program forms and certification rules and seek comment on how to implement such requirements in a manner that minimizes burdens on primary tier participants. We also seek comment on what changes to our rules and form instructions may be required to further communicate disclosure requirements to primary tier participants. Finally, we propose clarifying the disclosure rules to require that such disclosures by primary tier participants be made not only to the USF, TRS, and NDBEDP administrators, as the Commission's agents for the covered transactions, but also to the Commission (with disclosures to be submitted to the attention of the applicable bureaus). We seek comment on these proposals.

50. *Lower tier participants.* The Guidelines disclosure requirements for lower tier participants are less extensive; these parties need only disclose whether they are excluded or disqualified from participating in covered transactions. As a further protection for agency transactions, should any implementing rules adopted by the Commission require that participants at all or some of the lower tiers also disclose the information

applicable to primary tier participants to both the Commission and to the higher tier participant with which they seek to conduct business? For example, in the E-Rate program, a service provider would be required to disclose the primary tier information to the Commission, but the program beneficiaries (the schools and libraries) might also find that information useful in evaluating the services offered by their potential service providers.

51. We note that under the Guidelines, a disclosure of unfavorable information by a primary tier participant would not necessarily cause the federal agency to deny participation (except for instances of exclusion or disqualification), and our proposal would extend this protection to disclosures by lower tier participants. However, it would allow the agency and the higher tier participant to whom the disclosure was made the opportunity to consider this information to better determine whether participation seems appropriate under the circumstances presented. The requirement to notify lower tier participants of such additional disclosure obligations could be an additional duty for both primary and lower tier program participants under any new rules. We seek comment on this proposal and any alternatives.

52. Subpart C of the Guidelines describes the responsibilities of participants in lower tier transactions, and specifically requires such participants to pass down the requirements to persons at lower tiers with whom they intend to do business. We propose that primary and lower tier participants include a term or condition in their transactions with the next lower tier participants requiring compliance with 2 CFR part 180, subpart C, as supplemented by any Commission rules.

53. Lifeline *and other participant disclosures.* As proposed in this document, under the Lifeline program, eligible telecommunications carriers (ETCs), their agents, and subagents would be subject to disclosure obligations. We seek comment on how those disclosure obligations should be accomplished. Should the disclosure rules require all primary and lower tier participants in the Lifeline program to file disclosure statements, upon penalty of perjury, reporting all required disclosures or certifying that they have no reportable disclosures to make? For eligible telecommunications carriers, are there existing forms or submissions to which this disclosure should be added? [26] How often should such disclosure statements be required to be filed? For individuals who have registered with USAC for access to the Lifeline National Verifier or National Lifeline Accountability Database systems, should we require such disclosure statements to be filed upon registration and every subsequent recertification? Should ETCs be required to maintain such disclosure statements as part of their record retention requirements? What remedies should be available if participants fail to disclose the required information? We seek comment on these matters and on similar issues related to the implementation of disclosures for the other programs that may be made subject to the suspension and debarment rules, as proposed in this document.

54. *USF competitive bidding short forms.* In some instances, the Commission conducts competitive bidding to determine recipients of universal service support, as in the Connect America Fund auctions. We consider here the Commission's own processes for auctioning support, rather than the competitive bidding that schools, libraries, and health care providers must conduct prior to selecting a service provider in the E-Rate and RHC programs. In the Commission's competitive bidding process, an applicant for support first files a ''short-form'' application to participate in bidding. Having a simpler standard for ''short-form'' applications as opposed to ''long-form'' applications streamlines the competitive bidding process and encourages participation by keeping participation as simple as possible. Thus, at the short-form stage an applicant to participate in bidding for universal service support is only required to certify ''that the applicant is in compliance with all statutory and regulatory requirements for receiving the universal service support that the applicant seeks, or, if expressly allowed by the rules specific to a high-cost support mechanism, . . . that the applicant . . . must be in compliance with such requirements before being authorized to seek support,'' and is not required to demonstrate fully its qualifications and compliance. Only after becoming a winning bidder must an applicant file a ''long-form'' application demonstrating in detail the applicant's qualification to receive the support. For example, auction participants need not demonstrate eligible telecommunications carrier (ETC) qualifications until the long-form stage.

55. Primary tier participants would at a minimum provide all required disclosures with their long-form applications. As discussed above, the Guidelines require primary tier participants not only to disclose whether they are presently excluded or disqualified, but to make several additional disclosures that could assist the agency in evaluating whether to enter into the transaction with that person. The Guidelines give the agency discretion to consider the disclosed information before determining whether or not to enter into the covered transaction. We recognize that requiring all of the disclosures and evaluations at the short-form stage could slow the auction process. On the other hand, a problem would be created in situations where an entity participates in an auction, wins, and then is disqualified from receiving support. This problem may weigh in favor of more requiring more disclosure in the short-form application. Accordingly, we seek comment on the appropriate balance at the short-form stage between requiring helpful disclosures while preserving the simplicity and speed of applying to participate in the competitive bidding process, and more specifically on the three options discussed below or any other alternatives that commenters want to propose.

56. At the short-form application stage, the Commission could limit the application of the Guidelines to a review of the status of the applicant and wait until a winning bidder files a long-form application to have the applicant disclose additional parties and conduct further review. As noted, in a short-form application in connection with universal service support, an applicant must certify that it is ''in compliance with all . . . regulatory requirements for receiving the universal service support.'' Therefore, a presently excluded applicant could not make the required certification and could not successfully submit a complete short-form application. This approach permits the Commission to process applications to participate in competitive bidding more quickly and minimizes the disclosures required of potential participants. The applicant would bear the risk that required disclosures in its long-form application could result in its disqualification from support and a default on its application.

57. Alternatively, a second approach would be to require at the short-form stage that applicants disclose just

[26] For example, in the case of Lifeline, this could be effected through Form 555, reimbursement claims, or registration in the Representative Accountability Database.

whether the applicant or any of its principals are presently excluded or disqualified.[27] As under the first approach, a presently excluded or disqualified applicant could not make the required certification and would be unable to submit successfully a complete short-form application. In addition, under this second approach, an applicant with a principal that is presently excluded or disqualified would have to address those circumstances and come into compliance in the event it should become a winning bidder. If it failed to do so adequately, it could not successfully submit a complete short-form application. This approach seeks to balance requiring the most critical disclosures at this stage and maintaining an expeditious competitive bidding process.

58. Finally, a third approach would be to require applicants to make all disclosures required of a primary tier participant at the short-form stage, as well as the long-form stage. This would allow the Commission to review the disclosures and resolve any issues prior to the bidding. However, it also would significantly delay the competitive bidding process and the ultimate award of support. Furthermore, it would not eliminate the need for considering additional disclosures and assessments at the long-form stage, as an applicant might have additional disclosures to make due to developments during the course of competitive bidding. We seek comment on all these options and any other alternatives commenters may feel are appropriate at the short-form stage.

59. *Primary tier participants.* If a primary tier participant discloses unfavorable information (other than an exclusion or disqualification) to the Commission (or the Administrators) before it enters into a transaction (such as an E-Rate funding commitment), one possible way for the Commission to prevent the transaction is to institute and complete a suspension and/or debarment proceeding before the transaction is approved or concluded.

60. We seek comment on whether our rules should include less drastic remedies. For example, should the Commission adopt specific rules to afford itself (in consultation with the Administrators) the discretion to merely preclude the participant from entering into the transaction at hand, prior to or in lieu of suspending or debarring the participant? Or should rules permit the agency to choose to not enter into covered transactions with that party (for example, a service provider who is a primary tier participant) for some specified period, akin to the ''limited denial of participation'' process described further below? Should our rules be modified to permit the Commission to consider this unfavorable information in TRS or NDBEDP certification proceedings and, if so what modification to our certification rules would be appropriate to ensure that the Commission could take appropriate action to reflect such information?[28] If the agency should be afforded discretion not to enter into the covered transaction based on the unfavorable information without using a suspension or debarment mechanism, what procedures should be provided to ensure due process for the party or parties affected by that decision?

61. *Lower tier participants.* If the Commission adopts rules requiring lower tier participants, such as an E-Rate or Rural Health Care consultant or a TRS subcontractor, to disclose unfavorable information currently only required to be disclosed by primary tier participants (*i.e.,* convictions, etc.), the current Guidelines would not provide a mechanism for the Commission or the Administrators to reject a related primary tier participant's application solely because of that lower tier participant's disclosure. For example, if a school is utilizing an E-Rate consultant who has been convicted of fraud in another government program but has not yet been debarred, the Guidelines do not provide a mechanism for the rejection of the school's E-Rate application. However, requiring disclosure of additional information (in this example, the conviction) would give the Commission the opportunity to advise the program administrators to closely monitor the lower tier participant and, if appropriate, would enable the agency to initiate a suspension/debarment proceeding against the lower tier participant (if the disclosures are so significant that suspension or debarment is warranted).

62. We seek comment on whether the Commission should adopt rules that would allow the Commission, or the Administrators, to reject a nonprocurement transaction (*e.g.,* an application for USF funding, or a request for TRS compensation) where the Commission or the Administrators consider the disclosure of unfavorable information relating to the lower tier participant so significant that the transaction should be denied, even without initiation of a suspension or debarment proceeding. What factors should be considered in such a determination? For example, should the primary tier participant first be given the opportunity to terminate its relationship with the lower tier participant? We believe that providing the Commission, or the Administrators as its agents, the discretion to reject such primary participant transactions based on unfavorable information disclosed by lower tier participants would provide the Commission with maximum flexibility to protect the USF and TRS funds, and seek comment on this proposal.

63. Under the Guidelines, an agency head may grant an ''exception'' to allow an excluded person to participate in a transaction.[29] Should any Commission rules implementing the Guidelines spell out factors for invoking such an ''exception'' or should that determination be left solely to the discretion of the full Commission or the Chairman? If any factors are enumerated, we tentatively propose that one consideration be whether the provider of services—whether primary tier or lower tier—may be the sole source of services in the area, such that its exclusion could place consumers and-or beneficiaries at risk of losing service and more broadly the extent to which the exclusion would substantially impair delivery of services to customers and beneficiaries. Are there additional factors that should be identified as relevant to this determination? In addition, should the agency head alone be given authority to grant exceptions, or should the Commission consider a delegation of authority to the bureaus overseeing the programs (or perhaps to those bureaus in combination with the Enforcement Bureau) to grant such exceptions where the sole provider question is raised?

64. At least one other federal agency, the Department of Housing and Urban Development (HUD), specifically provides for a ''limited denial of participation'' for up to twelve months under its rules as a parallel mechanism to debarment. Many of the procedures under this mechanism resemble those under the Guidelines, including due process protections. However, HUD's limited denial of participation process does not trigger inter-agency reciprocity

[27] Thus, the applicant to participate in competitive bidding would be required to disclose the same information required of lower tier participants under the Guidelines.

[28] The TRS certification rules are quite specific on what constitutes grounds for granting certification.

[29] Section 180.135 provides that an agency head ''may grant an exception permitting an excluded person to participate in a particular covered transaction.'' Such an exception ''must be in writing and state the reason(s) for deviating from the government-wide policy in Executive Order 12549.''

because that process is deemed to be outside the government-wide suspension and debarment system. Therefore, invoking a limited denial of participation would prevent a bad actor from continuing to participate in the particular agency program that triggered the limited debarment, but would not result in the party's exclusion on the System for Award Management exclusion list so as to trigger reciprocal exclusions government-wide.

65. Under the HUD rules, if at any time after invoking the limited debarment process the agency determines that a suspension and debarment is the more appropriate mechanism, the agency may initiate either suspension or debarment proceedings. Adopting such a mechanism as part of the Commission's rules would allow the agency to protect its programs from conduct of bad actors for a shorter period than a suspension or debarment, while affording the party the opportunity to come into compliance expeditiously, without causing the wrongdoer to be automatically excluded across all agency programs or government-wide. We seek comment on whether adopting this mechanism could be a useful tool for the Commission to employ and, if so, what standards might be appropriate for triggering this remedy. Should such a mechanism be employed primarily to ensure that a program participant responds to information requests and other Commission directives, but not be employed where there is evidence of fraud or other substantial wrongdoing that would warrant debarment? Or would a limited denial of participation be appropriate where a bureau or the Commission wanted to recommend exclusion of a party from one agency program due to malfeasance, but not from all covered agency transactions? In what other circumstances might such a mechanism be appropriate or inappropriate?

C. Suspension and Debarment Process

66. The default procedural requirements applicable to suspension and debarment actions are set forth in subparts F, G, and H of the Guidelines. We seek comment on Commission-specific modifications to those procedures. We also invite comment on any other changes that parties believe should be made to the default procedures. Commenters should set forth their proposals, and the rationales supporting the proposed change, with specificity.

67. Under the Guidelines, agencies look to individual circumstances and factors in rendering suspension and debarment determinations. Some of the grounds for suspension or debarment are described in the Guidelines, but each agency can modify that list.[30] If the Commission adopts rules consistent with the Guidelines, are there specific additional suspension and/or debarment factors that should be expressly taken into consideration? We tentatively propose that additional factors that would militate in favor of suspension or debarment should include: Repeat offenders of Commission rules; habitual non-payment or under-payment of Commission regulatory fees and/or contributions to the USF and TRS programs and NDBEDP; willful violation of USF, TRS, and NDBEDP rules; the willful submission of FCC forms or statements made to the FCC or to the Administrators that result in or could result in overpayments of federal funds to the recipients, including the willful submission of false documentation to obtain USF or TRS funds; and the failure to respond to requests made by the FCC or the Administrators for additional information to justify payment or continued operation under their certifications.

68. We also tentatively propose as an additional factor the willful violation of a statutory or regulatory provision applicable or related to any submission made to obtain USF or TRS funds, or such a violation caused by gross negligence. For example, within the High-Cost program, we seek comment on whether the following should constitute grounds for debarment: Willful (or grossly negligent) violation: Improper cost accounting, including putting expenses not supported by the universal service fund in the carrier's revenue requirement; using high-cost support for non-supported expenses; and allocating non-regulated expenses to the regulated entity. Further, we tentatively propose to define the term ''public agreement or transaction,'' as used in section 180.800(b) of the Guidelines relating to causes for debarment, as encompassing contracts between USF applicants and their selected service providers and/or consultants.

69. The Guidelines also list numerous mitigating and aggravating factors that may influence the debarring official's decision.[31] We have sought comment on whether the Commission should consider granting an exception to an excluded service provider if that provider is the sole source of services in an area. More generally, during a debarment proceeding, should the Commission consider the impact that debarment would have on the provision of services to customers under agency programs, whether the TRS program, the NDBEDP, or the various USF programs? How would the Commission determine whether the person subject to suspension and/or debarment proceedings would be the sole provider of services, and to what extent should that influence the outcome of a suspension and debarment proceeding? Should debarment of an entity that appears to be the sole provider of services in an area be subject to a more extended transition period to permit customers or the agency to search for alternative sources of services? Where an entity is the sole source provider, should the Commission's rules provide for a remedy other than debarment, perhaps in the form of either a settlement agreement or a ''consent decree'' permitting continued service but subject to an appropriate compliance plan and strict oversight? What other vehicles or regulations might best accomplish the goal of protecting the USF and TRS programs and the NDBEDP from fraud or abuse without disrupting service to customers?

70. Finally, we note that a program participant may choose to continue with an excluded entity ''if the transactions were in existence when the agency excluded the person.'' [32] To what extent should continuation be permitted under those programs in which beneficiaries are receiving services on a month to month (or similarly short term) basis? For example, if a school or library receives E-Rate services by tariff on a month-to-month basis, should the school or library be required to transition to a different provider if the initial service provider is suspended or

[30] Grounds for suspension or debarment are set forth in section 180.800 of the Guidelines, and include not only convictions of or civil judgments for fraud or certain criminal offenses, including any ''offense indicating a lack of business integrity,'' but also violations of the requirements of public transactions ''so serious as to affect the integrity of an agency program'' (including willful or repeated violations). In addition, the Guidelines provide that suspension or debarment could be warranted for ''[f]ailure to pay a single substantial debt, or a number of outstanding debts . . . owed to any Federal agency.'' Finally, the Guidelines provide the discretion to suspend or debar for ''[a]ny other cause of so serious or compelling a nature that it affects [the party's] present responsibility.''

[31] The list of factors is extensive and includes, by way of example, the actual or potential harm or impact that results or may result from the wrongdoing, and the frequency of incidents and/or duration of the wrongdoing.

[32] We recognize that adoption of this provision would constitute a change of course from policies currently in effect for the E-Rate program that now preclude the distribution of any USF funds to debarred entities and would require appropriate changes to our rules.

debarred since the school or library is not under a binding long-term contract with that carrier? Or should we construe the term ''transactions . . . in existence'' to cover these monthly purchases? Should those beneficiaries receiving services for an indefinite term be required to seek a different service provider and, if so, what length of transition period would be appropriate? We seek comment on all these considerations and proposals, in addition to the other factors set forth in the Guidelines.

71. The Guidelines for suspension require ''adequate evidence,'' defined as ''information sufficient to support the reasonable belief that a particular act or omission has occurred.'' Under the Guidelines the suspending official first imposes the suspension, and then promptly notifies the suspended person, who is then afforded an opportunity to contest the suspension. Debarment in contrast requires a ''preponderance of the evidence'' and an opportunity for the target entity to respond before it goes into effect.

72. We seek comment on whether the Commission should adopt these evidentiary standards. Should the Commission adopt any suspension and debarment rules that include additional factors relating to the evidentiary standards (with particular attention as to what constitutes ''adequate evidence'')?

73. The typical debarment period is not more than three years, but that period may be adjusted based on the ''seriousness of the causes'' for debarment and evaluation of the factors listed in the Guidelines. Further, a debarred person may ask the debarring official to reconsider the decision or to reduce the time period or scope of the debarment. Are there additional mitigating factors beyond those set forth in the Guidelines that may warrant a reduction in the debarment period in response to a request for reconsideration?

74. Should the absence of an alternative service provider be a mitigating factor? Should the Commission adopt a mechanism that would permit a debarred person that is the sole provider of services to request, after the first year of debarment, a reduction in the debarment period? Should other participants have an opportunity to petition for a reduction of their debarment period by demonstrating that they have instituted compliance measures with training and oversight that will facilitate program compliance? In the context of the E-Rate and Rural Health Care programs, should the Commission treat applicant schools, libraries, and health care providers differently than other parties (either for determining the period of debarment, or in the review of applicable factors) and, if so, under what circumstances? Should the Commission provide for an additional requirement that supplements the Guidelines to require debarred parties to petition for readmission into FCC programs after the debarment period? If so, should the burden be on the petitioner to demonstrate that it has taken remedial actions to avoid future violations? Should any such petition be resolved by the bureau responsible for program oversight, by the debarring official, or by the Chairman or full Commission?

75. Should the debarring official have authority to tailor debarments for particular circumstances or propose remedies in lieu of suspension and debarment? [33] Should any such determinations be made only after input from appropriate bureau staff who are likely to have the best knowledge of how entities are certified (in the case of TRS or NDBEDP) or how alternative remedies might impact delivery of services to beneficiaries? What types of alternative remedies might be appropriate for the USF and TRS programs and the NDBEDP? Should alternative remedies be fashioned in a different way from consent decrees in Enforcement Bureau enforcement actions? For example, should the official be afforded authority to negotiate a settlement under which the respondent would agree to the repayment of funds or a reduction in program support, rather than suspension or debarment? Under what circumstances would such a resolution be appropriate? Are there other alternative remedies that the agency should consider?

76. We seek comment on several significant process questions to ensure that implementation of any new rules be efficient and fair.

77. One issue is who should present the evidence supporting suspension or debarment to the suspending or debarring official. If the Office of the Inspector General (OIG) has conducted the underlying investigation supporting the suspension and debarment, we would propose that the OIG have primary responsibility for presenting the evidence to the suspending or debarring official because it would be the entity most familiar with the underlying facts. In other situations, however, it may be appropriate for the presentation to be made by the other units within the Commission that may have conducted the investigation, such as the Enforcement Bureau. In addition, the Commission may want to develop coordination procedures to permit the bureaus most responsible for the implementation of its USF and TRS programs and the NDBEDP to make presentations in the proceedings because they are likely to have insights on ways to implement suspension or debarment without adversely impacting the persons or entities the programs are designed to assist. We seek comment on these options.

78. A second consideration is the mechanisms for appeal and review of any suspending or debarring action. We propose that a determination by the suspending or debarring official would be an action on which reconsideration could be sought under section 405 of the Communications Act or an application for review filed under section 155(c)(4) of the Communications Act. Would it be appropriate or necessary to adopt any supplemental rules applicable to applications for review or petitions for reconsideration of such actions, or are existing rules and procedures sufficient and appropriate to handle such petitions? If reconsideration could be sought or an application for review filed, as proposed, would it be appropriate for the Commission to adopt rules providing that the suspending or debarring official or Commission, as the case may be, would make every effort to act on such motions or applications within 180 days? Would some other time frame be more reasonable? Should we consider supplemental rules providing guidance for what constitutes ''good cause'' under section 1.106(n) of our rules for granting a stay of any suspension or debarment action taken by the Commission en banc, pending a decision on a petition for reconsideration? If a stay of a suspension or debarment is granted, we propose that any such stay not exceed 120 days to ensure that expedited review of the suspending or debarring action is provided. We also seek comment on whether the initial suspending or debarring actions, taken pursuant to delegated authority, should be subject to the procedures under section 1.102(a) or section 1.102(b) of our rules. If such actions would otherwise subject to section 1.102(a), which provides for automatic stays of hearing orders pending an application for review, we propose that suspension or debarment orders be exempt from such stays. We seek comment on all these proposals and on any other procedures governing the appeal and

[33] One possibility is to allow the debarring official to issue a limited denial of participation similar to that utilized by HUD.

review of determinations by the suspending or debarring official. If an interested party proposes such procedures, it should set forth that proposal and any supporting rationales with specificity.

79. A third procedural consideration is the designation of the ''suspending official'' and the ''debarring official'' who shall conduct fact finding for FCC suspensions and debarments. Currently, the Enforcement Bureau has authority to resolve universal service suspension and debarment proceedings.[34] We seek comment on whether we should revisit that determination given our proposal to significantly expand the scope of the Commission's suspension and debarment rules beyond the current non-discretionary USF suspensions and debarments.

80. We recognize that officials who conduct suspension and debarment proceedings should be neutral. Although suspension and debarment proceedings are not formal adjudications subject to APA formal hearing provisions that prohibit agency staff from performing both prosecutorial and decisional activities, we believe that the agency's appointment of suspending and debarring officials should reflect the ''separation of functions'' principle that shields agency decisionmakers from off-record presentations by staff who have presented evidence or argument on behalf of or against a party to a proceeding and prohibits such staff from participating in the decision. The separation of functions requirement in section 409(c)(1) of the Communications Act, which applies to both formal and informal adjudications that have been designated for hearing, prevents a person who has participated in the presentation of a case at a hearing or upon review from making any additional presentation respecting such case to the presiding officer or to any authority within the Commission performing a review function, absent notice and opportunity for all parties to participate.[35]

81. Consistent with these principles, if the Commission found that the Chief, Enforcement Bureau (or his or her designee) would be the most appropriate person to serve as the suspending official and debarring official, would it be appropriate for that person to conduct proceedings in which staff of the Enforcement Bureau identified the alleged misconduct that forms the basis for the proceeding, participated in the investigation or prosecution of the case, or are expected to be involved in any capacity in any appeal or review of the suspending or debarring official's determination? If not, should the Commission designate more than one suspending or debarring official to ensure that cases involving the Enforcement Bureau are resolved by a person not associated with that Bureau? Or would it be sufficient that any suspending or debarring official within the Enforcement Bureau not be involved in any way with the case presented by the Enforcement Bureau to the official? We seek comments on these questions. Should persons other than Enforcement Bureau personnel be considered for appointment as the suspending or debarring official, and, if so, what should be their qualifications? Would, for example, the Managing Director be a more appropriate person for this authority, since the Office of Managing Director is responsible for oversight of the USF and TRS funds and for the agency's financial management? Should the suspending and debarring official be subject to appointment for a specific term, or may that person be subject to removal by the Commission at will? What is the relevance to these questions, if any, of the Appointments Clause to the U.S. Constitution and the Supreme Court's decision in *Lucia* v. *SEC*? We seek comment on these and all other issues related to the designation of such officials.

82. We seek comment on whether any persons or entities that currently participate in the Commission's programs would be debarred through the application of reciprocity and, if so, seek comment on whether they seek any modifications to the Guidelines to allow them to continue to participate in Commission programs.[36] Should Commission rules further provide that when an entity or person is excluded by another agency, that entity or person should immediately advise the Commission's debarring officer whenever it believes it is the sole provider of services for particular consumers under covered transactions? This would afford the agency head (or other official with delegated authority) an opportunity to grant a temporary exception for good cause while the agency evaluates the effect of the exclusion on program beneficiaries. If we adopt such a provision, should the Commission be required to act within a certain period, such as 90 days? Should the rules further specify that in appropriate cases, the agency head, full Commission, or other official with delegated authority could ''except'' the excluded party from reciprocity affecting participation in one or more FCC covered transactions subject, if appropriate, through a negotiated agreement that would include provisions such as mandatory independent audits, additional reporting requirements, or similar forms of oversight? We seek comment on these options, as well as other mechanism that might afford flexibility in protecting program funds while also ensuring that consumers are not without program services.

83. We note that suspension and debarment could present a particularly difficult situation if a TRS provider were excluded based on the action of another agency, through reciprocity, causing potential immediate adverse consequences to consumers who rely on TRS to meet their communications needs. Because TRS providers do not have contracts with their TRS customers, each service provided to customers could be viewed as a new ''covered transaction.'' Without an exception, an excluded TRS provider could be barred from receiving payments for any services provided after the date it was suspended or debarred. We propose that any excluded TRS provider would be required to immediately notify the TRS Fund administrator when it is placed on the System for Award Management exclusion list, and that it could request and obtain a temporary exception for the 30-day period following its suspension or debarment to allow for a smooth transition for consumers. We propose further that the excluded TRS provider may file with the Commission a request for a longer exception within 30 days after the date of its suspension or debarment by another government agency. Such a request, if timely filed, would serve as a stay of the government-wide suspension and debarment for purposes of the TRS program for not more than 6 months or until issuance of a decision on the exception request, whichever occurs first. Such a grace period would permit the Commission to determine whether a longer exception would be appropriate and would afford customers (as well as agencies running the certified state programs) the opportunity to transition to a new provider. We seek comment on this proposal. We also seek comment about

[34] Section 54.8 was originally adopted as 54.521 and redesignated in 2007.

[35] Consistent with this, the Administrative Conference recommends that agencies require internal separation of decisional and adversarial personnel in adjudications that are not subject to formal APA hearing requirements.

[36] Under the Guidelines, a program participant may continue receiving services from an excluded person under an existing contract, but may not renew or extend the contract (other than no-cost time extensions) without an exception from the agency.

whether for the NDBEDP special exceptions to any suspension and debarment might be fashioned to address similar service disruption concerns.

84. Finally, we seek comment on what steps we would need to take to provide information regarding entities suspended or debarred by the Commission to the government-wide System for Award Management. While the Commission already uses this system for purposes of its agency procurements, and many participants in the USF and TRS programs and the NDBEDP are registered in the System for Award Management for other purposes, the Commission does not currently require persons to register before participating in its USF and other programs. Should the Commission require a party that is not already registered to do so when it initiates a suspension or debarment proceeding, or when it makes a final decision to suspend or debar the entity? How can we best implement our goal of reflecting future suspensions or debarments in the System for Award Management?

85. The rules under several USF-related programs, Mobility Fund I and II, and Rural Broadband Experiments under the Connect America Fund, already provide for the remedy of disqualification for recipients of support who fail to meet their obligations.[37] The Guidelines allow agencies to consider whether persons ''disqualified'' from specified nonprocurement transactions pursuant to a specific statute, executive order or legal authority other than the suspension and debarment process should be listed as excluded in the System for Award Management Exclusions (effectively debarring the disqualified person government-wide). Under our USF rules, disqualification only applies to participation in the USF program. Therefore, we propose that a disqualified person should be referred to the suspending and debarring official for a full suspension and/or debarment proceeding and would be listed by the Commission as excluded in the government-wide system only after an adverse determination in that proceeding. Alternatively, should we provide for automatic suspension or debarment of any entity disqualified under our USF rules?

86. In the case of the TRS program, a certification can be suspended or revoked for failure to meet any number of mandatory minimum standards, only some of which relate to fraudulent practices. In the case of the NDBEDP, many of the qualifications for certification of a state program relate to factors unrelated to fraudulent practices, and such certification can be suspended or revoked for failure to meet such qualifications. In other words, for both of these programs, it appears that causes for suspension and revocation under the existing procedures overlap with, but are not the same as, the proposed new suspension and debarment rules. We therefore propose that the procedures proposed in this document, if adopted, would be in addition to the existing program procedures, and seek comment on these proposals.

D. Application of Revised Rules To Conduct Occurring Prior to Their Effective Date

87. We propose, in appropriate cases, to authorize the suspending or debarring officer to apply any revised suspension and debarment rules to conduct in Commission programs that occurred before the effective date of such rules where expeditious suspension or debarment would be in the public interest to prevent or deter further harm to Commission programs. However, where that conduct has already resulted in settlements with the Commission by a party responsible for the alleged misconduct, no suspension or debarment of that party based on such antecedent conduct would be authorized if such party has and continues to comply with the settlement terms. We seek comment on this proposal.

88. We further seek comment on whether the ineligibility to participate in Commission programs based on inclusion on the System for Award Management exclusion list should be applicable to those exclusions made by another federal agency (whether for nonprocurement transactions or procurement transactions) only on or after the effective date of any revised Commission rules. If such a rule were adopted, would program participants who are required to check the System for Award Management exclusion list before entering into contracts be able to determine the date an exclusion was made and, if that information were not readily ascertainable, what alternative mechanisms would afford participants (or the Commission) the ability to distinguish whether an exclusion by another agency would trigger reciprocity or not by the Commission, based on when it went into effect?

89. Alternatively, if such exclusions were made by another federal agency before the effective date of revised Commission rules, should the Commission provide for ineligibility for Commission programs as a default, subject to review? For example, the Commission could provide for a transitional mechanism for three years or less [38] that would allow persons debarred by other federal agencies before the effective date of the Commission's revised rules to seek expeditious review to determine whether an exception to the exclusion is warranted. We seek comment on this approach. Under this approach, if the Commission authorized exceptions to suspension and debarment, should it attach (where appropriate) conditions such as a compliance plan or audit mechanisms, at the discretion of the suspending or debarring officer? What special standards, if any, should be applied during such any transitional period to evaluate whether an exception to reciprocal suspension or debarment would be warranted?

90. Conversely, after any revised suspension and debarment rules become effective, would it be appropriate for the Commission to refer any entities suspended or debarred under current section 54.8 to GSA for inclusion on the government-wide System for Award Management exclusion list? We seek comment on this question. If the Commission determines that such referrals would be inappropriate, in whole or in part, then we propose that the Commission maintain its current separate listing of suspensions and debarments that predate any new rules (at least until such time as the applicable suspension and debarment periods have terminated), and propose that the term ''excluded or exclusion'' in the Guidelines shall include those individuals and entities previously suspended or debarred by the Commission, in addition to those included on the System for Award Management exclusion list. We would also propose to modify the obligations of participants to ensure that before entering into a covered transaction with persons at the next lower tier, the participant check both the Commission's listings of suspensions and debarments and the System for Award Management exclusions. We seek comment on this proposal. We also seek comments on any additional modifications that would be required to

[37] In addition, under section 54.320(c) of our rules, eligible telecommunication carriers in the High-Cost program that fail to comply with public interest obligations or any other terms and conditions may be subject to reductions in support amounts, potential revocation of ETC designation, and suspension or debarment pursuant to current section 54.8 of our rules.

[38] The standard debarment period under the Guidelines is three years.

ensure that persons debarred or suspended by the Commission before the effective date of any new rules be deemed to be excluded persons.

E. Preclusion of Excluded Persons From Serving on Commission Advisory Committees

91. The appointment of members to federal advisory committees rests within the discretion of the Commission as the appointing authority. We propose that any persons or entities that are debarred or suspended be barred (during their period of debarment or suspension, as shown by inclusion on the government-wide exclusion list) from serving on the Commission's advisory committees or comparable Commission groups or task forces established by the Commission. If a person or entity that is already a member of such an advisory group is suspended or debarred after an initial appointment to a Commission advisory group, we propose that such person or entity be removed from that position. We seek comment on these proposals.

IV. Procedural Matters

92. *Ex Parte Rules—Permit-but-Disclose.* This proceeding shall be treated as a ''permit-but-disclose'' proceeding in accordance with the Commission's *ex parte* rules. Persons making *ex parte* presentations must file a copy of any written presentation or a memorandum summarizing any oral presentation within two business days after the presentation (unless a different deadline applicable to the Sunshine period applies). Persons making oral *ex parte* presentations are reminded that memoranda summarizing the presentation must (1) list all persons attending or otherwise participating in the meeting at which the *ex parte* presentation was made, and (2) summarize all data presented and arguments made during the presentation. If the presentation consisted in whole or in part of the presentation of data or arguments already reflected in the presenter's written comments, memoranda or other filings in the proceeding, the presenter may provide citations to such data or arguments in his or her prior comments, memoranda, or other filings (specifying the relevant page and/or paragraph numbers where such data or arguments can be found) in lieu of summarizing them in the memorandum. Documents shown or given to Commission staff during *ex parte* meetings are deemed to be written *ex parte* presentations and must be filed consistent with rule 1.1206(b). In proceedings governed by rule 1.49(f) or for which the Commission has made available a method of electronic filing, written *ex parte* presentations and memoranda summarizing oral *ex parte* presentations, and all attachments thereto, must be filed through the electronic comment filing system available for that proceeding, and must be filed in their native format (*e.g.,* .doc, .xml, .ppt, searchable .pdf). Participants in this proceeding should familiarize themselves with the Commission's *ex parte* rules.

93. *Comment Period and Filing Procedures.* Pursuant to sections 1.415 and 1.419 of the Commission's rules, 47 CFR §§ 1.415, 1.419, interested parties may file comments and reply comments on or before the dates indicated on the first page of this document. Comments may be filed using the Commission's Electronic Comment Filing System (ECFS). *See Electronic Filing of Documents in Rulemaking Proceedings,* 63 FR 24121 (1998).

- *Electronic Filers:* Comments may be filed electronically using the internet by accessing the ECFS: *https://www.fcc.gov/ecfs/.*
- *Paper Filers:* Parties who choose to file by paper must file an original and one copy of each filing. If more than one active docket or rulemaking number appears in the caption of this proceeding, filers must submit two additional copies for each additional docket or rulemaking number.

94. Filings can be sent by hand or messenger delivery, by commercial overnight courier, or by first-class or overnight U.S. Postal Service mail. All filings must be addressed to the Commission's Secretary, Office of the Secretary, Federal Communications Commission.

- All hand-delivered or messenger-delivered paper filings for the Commission's Secretary must be delivered to FCC Headquarters at 445 12th St. SW, Room TW–A325, Washington, DC 20554. The filing hours are 8:00 a.m. to 7:00 p.m. All hand deliveries must be held together with rubber bands or fasteners. Any envelopes and boxes must be disposed of *before* entering the building.
- Commercial overnight mail (other than U.S. Postal Service Express Mail and Priority Mail) must be sent to 9050 Junction Drive, Annapolis Junction, MD 20701.
- U.S. Postal Service first-class, Express, and Priority mail must be addressed to 445 12th Street SW, Washington, DC 20554.

People with Disabilities: To request materials in accessible formats for people with disabilities (Braille, large print, electronic files, audio format), send an email to *fcc504@fcc.gov* or call the Consumer & Governmental Affairs Bureau at 202–418–0530 (voice), 202–418–0432 (tty).

95. *Availability of Documents.* Comments, reply comments, and *ex parte* submissions will be available for public inspection during regular business hours in the FCC Reference Center, Federal Communications Commission, 445 12th Street SW, Room CY–A257, Washington, DC These documents will also be available via ECFS. Documents will be available electronically in ASCII, Microsoft Word, and/or Adobe Acrobat.

96. *Initial Regulatory Flexibility Analysis.* As required by the Regulatory Flexibility Act of 1980, as amended (RFA), the Commission has prepared an Initial Regulatory Flexibility Analysis (IRFA) of the possible significant economic impact on small entities of the policies and rules addressed in this document. The IRFA is set forth in Appendix B of the NPRM and is summarized in Part V below. Written public comments are requested on the IRFA. These comments must be filed in accordance with the same filing deadlines for comments on the NPRM, and should have a separate and distinct heading designating them as responses to the IRFA. The Commission will send a copy of the Notice of Proposed Rulemaking, including the IRFA, to the Chief Counsel for Advocacy of the Small Business Administration (SBA).

97. *Paperwork Reduction Act Analysis.* This document contains proposed new or modified information collection requirements. The Commission, as part of its continuing effort to reduce paperwork burdens, invites the general public and the Office of Management and Budget (OMB) to comment on the information collection requirements contained in this document, as required by the Paperwork Reduction Act of 1995, Public Law 104–13. In addition, pursuant to the Small Business Paperwork Relief Act of 2002, Public Law 107–198, *see* 44 U.S.C. 3506(c)(4), we seek specific comment on how we might further reduce the information collection burden for small business concerns with fewer than 25 employees.

98. *Further Information.* For additional information on this proceeding, contact Paula Silberthau of the Office of General Counsel at *paula.silberthau@fcc.gov* or (202) 418–1874.

99. *Statement of Authority:* This NPRM is authorized by sections 4(i), 4(j), 225, 254, and 719 of the Communications Act of 1934, as amended, 47 U.S.C. 154(i), 154(j), 225, 254, 620.

V. Initial Regulatory Flexibility Analysis

100. As required by the Regulatory Flexibility Act of 1980, as amended (RFA), the Commission has prepared an Initial Regulatory Flexibility Analysis (IRFA) of the possible significant economic impact on a substantial number of small entities by the policies and rules proposed in the Notice of Proposed Rulemaking (Notice). Written comments are requested on this IRFA. Comments must be identified as responses to the IRFA.

A. Need for, and Objectives of, the Proposed Rules

101. The Commission oversees a number of critical support programs such as the Universal Service Fund (USF) programs, the Telecommunications Relay Services (TRS) programs, and the National Deaf-Blind Equipment Distribution Program (NDBEDP). As part of its oversight role, the Commission seeks to protect these programs from waste, fraud, and abuse to ensure that government funds are efficiently used for their intended purposes. To date, in the USF context, the Commission's rules allows it to suspend and debar those against whom there has been a conviction or civil judgment arising from or related to USF programs.

102. In the Notice, the Commission has proposed to expand its arsenal of tools to root out bad actors more effectively and expeditiously by adopting new rules consistent with the Office of Management and Budget Guidelines to Agencies on Government Debarment and Suspension (Nonprocurement), 2 CFR part 180 (OMB Guidelines). The Commission proposes to apply any new suspension and debarment rules to transactions under the USF and TRS programs, which are its primary permanent nonprocurement programs, as well as to transactions under the NDBEDP. Other Commission nonprocurement programs would be exempt. Significantly, under the OMB Guidelines, the Commission would have authority, like other government agencies, to evaluate the wrongful or fraudulent conduct of companies or individuals in other dealings with the government and to take remedial action before the issuance of a judgment or conviction. The Commission believes that adopting rules consistent with the OMB Guidelines will provide a more advantageous mechanism for deterring and stopping wrongdoing affecting agency programs.

103. The Commission's proposals in the Notice fall into three areas. First, the Commission proposes to apply the suspension and debarment rules to a broader category of entities than are now covered, by defining ''covered transactions'' as including conduct taken by participants in the USF, TRS, and NDBEDP programs, and by defining covered ''tiers'' of transactions, including those involving contractors of service providers in these programs. Second, the Commission proposes to adopt requirements that program participants confirm that those with whom they do business are not already excluded or disqualified from government activities. Such confirmation is consistent with the OMB Guidelines and many entities who participate in federal grant programs or seek federal contracts should already be familiar with the process. We seek comment on possible exceptions and how to implement the principle of reciprocity, which would prevent a party that is suspended or debarred by another agency from participation in covered Commission transactions. Third, again consistent with the OMB Guidelines, the Commission proposes new procedural requirements that would allow the agency to respond quickly to evidence of misconduct through a suspension mechanism, while providing for an evidentiary proceeding, evaluating a broader range of wrongful conduct than is now considered,[39] prior to any disbarment.

B. Description of the Small Entities to Which Proposed Rules Would Apply

104. The RFA directs agencies to provide a description of, and where feasible, an estimate of the number of small entities that may be affected by the rule changes. The RFA generally defines the term ''small entity'' as having the same meaning as the terms ''small business,'' ''small organization,'' and ''small governmental jurisdiction.'' In addition, the term ''small business'' has the same meaning as the term ''small business concern'' under the Small Business Act. A ''small business concern'' is one that: (1) Is independently owned and operated; (2) is not dominant in its field of operation; and (3) satisfies any additional criteria established by the SBA.

105. *Small Businesses, Small Organizations, Small Governmental Jurisdictions.* The Commission's actions, over time, may affect small entities that are not easily categorized at present. We therefore describe here, at the outset, three broad groups of small entities that could be directly affected herein. First, while there are industry specific size standards for small businesses that are used in the regulatory flexibility analysis, according to data from the SBA's Office of Advocacy, in general a small business is an independent business having fewer than 500 employees. These types of small businesses represent 99.9% of all businesses in the United States which translates to 28.8 million businesses.

106. Next, the type of small entity described as a ''small organization'' is generally ''any not-for-profit enterprise which is independently owned and operated and is not dominant in its field.'' Nationwide, as of August 2016, there were approximately 356,494 small organizations based on registration and tax data filed by nonprofits with the Internal Revenue Service (IRS).

107. Finally, the small entity described as a ''small governmental jurisdiction'' is defined generally as ''governments of cities, counties, towns, townships, villages, school districts, or special districts, with a population of less than fifty thousand.''[40] U.S. Census Bureau data from the 2012 Census of Governments[41] indicates that there were 90,056 local governmental jurisdictions consisting of general purpose governments and special purpose governments in the United States. Of this number there were 37,132 general purpose governments (county, municipal, and town, or township) with populations of less than 50,000 and 12,184 special purpose governments (independent school districts and special districts) with populations of less than 50,000. The 2012 U.S. Census Bureau data for most types of governments in the local government category show that the majority of these governments have populations of less than 50,000. Based on this data we estimate that at least 49,316 local government jurisdictions fall in the category of ''small governmental jurisdictions.''

108. Small entities potentially affected by the proposals herein include eligible schools and libraries, eligible rural non-profit and public health care

[39] The OMB Guidelines provide federal agencies with substantial discretion to suspend and debar participants based on consideration of numerous factors. Moreover, through imputation rules, action could be taken against an organization, not just a principal, or the reverse, in appropriate circumstances. The imputation rules too would plug a gap in the Commission's current suspension and debarment mechanism.

[40] 5 U.S.C. 601(5).

[41] *See* 13 U.S.C. 161. The Census of Government is conducted every five (5) years compiling data for years ending with ''2'' and ''7''. *See also* Program Description, Census of Governments, *https://factfinder.census.gov/faces/affhelp/jsf/pages/metadata.xhtml?lang=en&type=program&id=program.en.COG#.*

providers, and the eligible service providers offering them services, including telecommunications service providers, internet Service Providers (ISPs), and vendors of the services and equipment used for telecommunications and broadband networks.

1. Schools and Libraries

109. As noted, ''small entity'' includes non-profit and small government entities. Under the schools and libraries universal service support mechanism, which provides support for elementary and secondary schools and libraries, an elementary school is generally ''a non-profit institutional day or residential school, that provides elementary education, as determined under state law.'' A secondary school is generally defined as ''a non-profit institutional day or residential school, that provides secondary education, as determined under state law,'' and not offering education beyond grade 12. A library includes ''(1) a public library, (2) a public elementary school or secondary school library, (3) an academic library, (4) a research library . . . , and (5) a private library, but only if the state in which such private library is located determines that the library should be considered a library for the purposes of this definition.'' For-profit schools and libraries, and schools and libraries with endowments in excess of $50,000,000, are not eligible to receive discounts under the program, nor are libraries whose budgets are not completely separate from any schools. Certain other statutory definitions apply as well. The SBA has defined for-profit, elementary and secondary schools and libraries having $6 million or less in annual receipts as small entities. In funding year 2007, approximately 105,500 schools and 10,950 libraries received funding under the schools and libraries universal service mechanism. Although we are unable to estimate with precision the number of these entities that would qualify as small entities under SBA's size standard, we estimate that fewer than 105,500 schools and 10,950 libraries might be affected annually by our action, under current operation of the program.

2. Healthcare Providers

110. The healthcare providers that could be affected by the proposed rules in the NPRM include the following: Office of Physicians (except Mental Health Specialists); Offices of Physicians, Mental Health specialists; Offices of Dentists; Offices of Chiropractors; Offices of Optometrists; Offices of Mental Health Practitioners (except physicians); Offices of Physical, Occupational and Speech Therapists and Audiologists; Offices of Podiatrists; Office of all Other Miscellaneous Health Practitioners; Family Planning Centers; Outpatient Mental Health and Substance Abuse Centers; HMO Medical Centers; Freestanding Ambulatory Surgical and Emergency Centers; All other Outpatient Care Centers; Blood and Organ Banks; All Other Miscellaneous Ambulatory Health Care Services; Medical Laboratories; Diagnostic Imaging Centers; Home Health Care Services; Ambulance Services; Kidney Dialysis Centers; General Medical and Surgical Hospitals; Psychiatric and Substances Abuse Hospitals; Specialty (Except Psychiatric and Substances Abuse) Hospitals; and Emergency and Other Relief Services.

3. Providers of Telecommunications and Other Services

111. The telecommunications service providers that could be affected by the proposed rules include the following categories: Incumbent Local Exchange Carriers (LECs); Interexchange Carriers (IXCs); Competitive Access Providers; Operator Service Providers (OSPs);Local Resellers; Toll Resellers; Telecommunications Resellers; Wired Telecommunications Carriers; Wireless Telecommunications Carriers (except Satellite); Common Carrier Paging; Wireless Telephony (for which the closest applicable SBA category is Wireless Telecommunications Carriers (except Satellite); Satellite Telecommunications; All Other Telecommunications.

112. The internet Service Providers that could be affected by the proposed rules including the following categories: Internet Service Providers (Broadband); and internet Service Providers (Non-Broadband).

113. The Vendors and Equipment Manufacturers that could be affected by the proposed rules include the following categories: Vendors of Infrastructure Development or ''Network Buildout''; Telephone Apparatus Manufacturing; Radio and Television Broadcasting and Wireless Communications Equipment Manufacturing; Other Communications Equipment Manufacturing; Administrative Management and General Management Consulting Services; Marketing Consulting Services; and Other Management Consulting Services.

C. Description of Projected Reporting, Recordkeeping, and Other Compliance Requirements for Small Entities

114. The Notice proposes to adopt new rules consistent with the OMB Guidelines in 2 CFR part 180 in order to obtain additional tools to prevent fraud, waste, and abuse. The Commission proposes to apply any new suspension and debarment rules to transactions under the USF and TRS programs, its primary permanent nonprocurement programs, as well as transactions under the NDBEDP. Adopting such rules would impose certain new obligations on program participants, including: (1) Requirements that program participants confirm that those with whom they do business are not already excluded or disqualified from government activities (which can be accomplished by checking the Government wide System for Award Management Exclusions (SAM exclusion list), by a certification, or by addition of terms to the applicable transaction); and (2) mandatory disclosures for participants that may include (i) notification to the Commission and its program agents of whether any of the participants' principals have been either convicted, indicted or civilly charged by any government entity for certain offenses during the past three years, and (ii) notification of whether the participants are excluded or disqualified from participating in covered transactions. Any person suspended or debarred by a Commission order would be excluded from participation in any Commission programs (not just the program in which the bad actions occurred) and would be placed on the Government wide System for Award Management Exclusions, triggering reciprocity barring that person from participating in other government programs (including procurement transactions) unless the person were granted an exemption by another agency.

115. At this time, the Commission is not in a position to determine whether, if adopted, the potential rule changes raised in the Notice will require small entities to hire attorneys, engineers, consultants, or other professionals and cannot quantify the cost of compliance with the potential rule changes raised herein. The Notice seeks comment on these proposals, including the benefits and any adverse effects from joining the government-wide nonprocurement suspension and debarment system, as well as on alternative approaches and any other steps we should consider taking. The Notice also seeks comment on how broadly this proposed rule should apply in terms of program transactions and persons covered, and how it should be implemented. We expect the information we receive in comments on our proposals to help the

Commission identify and evaluate relevant matters for small entities, including compliance costs and other burdens that may result from the matters raised in the Notice.

D. Steps Taken To Minimize the Significant Economic Impact on Small Entities, and Significant Alternatives Considered

116. The RFA requires an agency to describe any significant, specifically small business, alternatives that it has considered in reaching its proposed approach, which may include the following four alternatives (among others): ''(1) the establishment of differing compliance or reporting requirements or timetables that take into account the resources available to small entities; (2) the clarification, consolidation, or simplification of compliance and reporting requirements under the rule for such small entities; (3) the use of performance rather than design standards; and (4) an exemption from coverage of the rule, or any part thereof, for such small entities.''

117. The Commission has taken several steps that may minimize the economic impact for small entities if the proposals in the Notice are adopted. We ask whether short-form applications to participate in competitive bidding for USF support should be excluded from the scope of covered transactions for purposes of suspension and debarment rules or possibly be subject to different participant disclosure rules. We also propose to exempt incentive auction payments associated with the auction of new spectrum licenses from the scope of ''covered transactions'' subject to suspension and debarment rules. Similarly, the Commission proposes to exempt payments related to the broadcast incentive auctions, including reimbursement payments from any suspension and debarment rules that are adopted. With regard to the disclosure requirements that would be applicable if the OMB Guidelines are adopted, we anticipate that these requirements can be implemented with modifications to existing program forms and certification rules rather than fashioning new and additional forms which could increase the administrative burden for small entities.

118. The economic impact for small entities may also be minimized as a result of the Commission's proposal to adopt a minimum dollar value threshold for certain transactions in order for suspension and debarment rules to apply. More specifically, the *NPRM* proposes that the suspension and debarment rules should apply to all contractors, subcontractors, suppliers, consultants or any agent or representative thereof for USF, TRS, or NDBEDP transactions only where those transactions are expected to equal or exceed $25,000, subject to certain exceptions. Therefore, small entities that do not meet the transaction threshold amount may be able to avoid application of any adopted suspension and debarment requirements provided they do not fall into one of the threshold exceptions. The Notice proposes that the $25,000 threshold not be applicable where a party to the transaction would have a material role affecting claims for reimbursement under the Commission programs or if the party is a ''principal'' to the transaction. An exception to the threshold amount is also proposed for contracts or awards under the Lifeline program for those transactions in which a person is reimbursed based on commission or by Lifeline subscribers enrolled. The Notice seeks comment on these proposals.

119. To assist in the Commission's evaluation of the economic impact on small entities, and to better explore options and alternatives, the Commission has sought comment from the parties on the above proposals and other matters discussed in the Notice. We expect to more fully consider the economic impact on small entities following our review of comments filed in response to the Notice in reaching our final conclusions and promulgating rules in this proceeding.

E. Federal Rules That May Duplicate, Overlap, or Conflict With the Proposed Rules

120. If the Commission adopts rules consistent with the OMB Guidelines, such rules would replace those Commission rules that currently provide for different suspension and debarment procedures. At present, the Commission rules addressing suspension and debarment are codified in 47 CFR 54.8 and apply only to USF programs. If the Commission adopts new rules as proposed in the Notice, we anticipate that the Commission would repeal the existing suspension and debarment rules in section 54.8. If commenters suggest that any other rules now in effect duplicate, overlap, or conflict with the rules proposed in the Notice, the Commission will closely review and consider those situations.

List of Subjects in 47 CFR Part 16

Administrative practice and procedure, Common carriers, Communications, Communications common carriers, Communications equipment, Subsidies, Telecommunications, Telephone.

For the reasons discussed in the preamble, the Federal Communications Commission proposes to add a new part 16 to chapter I, subchapter A of title 47 of the Code of Federal Regulations:

PART 16—NONPROCUREMENT DEBARMENT AND SUSPENSION

■ 1. Add part 16 to read as follows:

Subpart A—General

Sec.

16.1 Supplemental definitions.
16.105 What does this part do?
16.110 Does this part apply to me?
16.115 What policies and procedures must I follow?
16.120 Who in the Commission may grant an exception to let an excluded person participate in a covered transaction? And what considerations should be relevant?
16.125 What are exempted Commission transactions?

Subpart B—Covered Transactions

16.200 What additional transactions are covered transactions?
16.220 What contracts and subcontracts, in addition to those listed in 2 CFR 180.220, are covered transactions?

Subpart C—Responsibilities of Participants Regarding Transactions Doing Business With Other Persons

16.300 What must I do before I enter into a covered transaction with another person at the next lower tier? (FCC supplement to 2 CFR 180.300)
16.330 What methods must I use to pass requirements down to participants at lower tiers with whom I intend to do business?
16.335 Additional information disclosures for lower tier participants
16.340 Clarification of tiers related to Commission programs

Subpart D—Responsibilities of Federal Agency Officials Regarding Transactions

16.435 What method should the Commission or participants use to implement the requirements described in the Guidelines at 2 CFR 180.435?
16.440 Who conducts fact finding for FCC suspensions?
16.445 Who conducts fact finding for FCC debarments?
16.450 What additional factors should the Commission consider for suspension or debarment determinations?
16.455 What Commission alternatives to suspension or debarment may be appropriate?
16.460 What must I do to be reinstated after my period of debarment is over?

Subpart E—Limited Denial of Participation

16.501 What is a limited denial of participation?
16.503 Who may issue a limited denial of participation?
16.505 When may a Commission official issue a limited denial of participation?
16.507 When does a limited denial of participation take effect?

16.509 How long may a limited denial of participation last?
16.511 How does a limited denial of participation start?
16.513 How may I contest my limited denial of participation?
16.515 Do Federal agencies coordinate limited denial of participation actions?
16.517 What is the scope of a limited denial of participation?
16.519 May the FCC impute the conduct of one person to another in a limited denial of participation?
16.521 What is the effect of a suspension or debarment on a limited denial of participation?
16.523 What is the effect of a limited denial of participation on a suspension or a debarment?
16.525 May a limited denial of participation be terminated before the term of the limited denial of participation expires?
16.527 How is a limited denial of participation reported?

Authority: 47 U.S.C. 154, 225, 254, 620; Sec. 2455, Pub. L. 103–355, 108 Stat. 3327 (31 U.S.C. 6101 note); E.O. 11738 (3 CFR, 1973 Comp., p. 799); E.O. 12549 (3 CFR, 1986 Comp., p. 189); E.O. 12689 (3 CFR, 1989 Comp., p. 235)

Subpart A—General

§ 16.100 Supplemental definitions.

In addition to the definitions set forth in subpart I of 2 CFR part 180, for purposes of this part,

(a) The term ''E-Rate Program'' means the program providing universal service support for schools and libraries, as set forth in part 54, subparts A and F of the Commission's rules.

(b) The term ''Eligible Telecommunications Carrier'' means an Eligible Telecommunications Carrier as defined in section 54.5 of the Commission's rules.

(c) The term ''Guidelines'' means the OMB Guidelines to Agencies on Governmentwide Debarment and Suspension (Nonprocurement), as set forth in 2 CFR part 180.

(d) The term ''High-Cost Program'' means the programs providing universal service support for rural, insular, and high cost areas, as set forth in part 54, subparts A, B, C, D, J, K, L, M, and O of the Commission's rules.

(e) The term ''Lifeline Program'' means the program providing universal service support for low-income consumers set forth in part 54, subparts A, B, C and E of the Commission's rules.

(f) The term ''NDBEDP'' means the National Deaf-Blind Equipment Distribution Program, under which payments from the TRS Fund are made to support programs distributing communications equipment to low-income individuals who are deaf-blind, pursuant to Chapter 64, subpart GG of the Commission's rules, 47 CFR 64.6201 *et seq.*

(g) The term ''NDBEDP Administrator'' means the administrator of the NDBEDP.

(h) The term ''Principal'' means, in addition to those individuals described at 2 CFR 180.995, any person who has a critical influence on, or substantive control over, a covered transaction, whether or not employed by the participant or paid with federal funds. Persons who have a critical influence on, or substantive control over, a covered transaction may include, but are not limited to: Management and marketing agents, accountants, consultants, investment bankers, engineers, attorneys, and other professionals who are in a business relationship with participants in connection with a covered transaction under an FCC program.

(i) The term ''Rural Health Care Program'' means the program providing universal service support for health care providers set forth in part 54, subparts A and G of the Commission's rules.

(j) The term ''SAM Exclusions'' means the System for Award Management Exclusions, which is a widely available source of the most current information about persons who are excluded or disqualified from covered transactions, as further described in subpart E of 2 CFR part 180.

(k) The term ''TRS Programs'' means all programs described in Chapter 64, subpart F of the Commission's rules.

(l) The term ''TRS Fund Administrator'' means the entity selected as the administrator of the Telecommunications Relay Services Fund pursuant to 47 CFR 64.604(c)(5)(iii).

(m) The term ''USF Programs'' means the programs implementing the Universal Service Fund pursuant to section 254 of the Communications Act of 1934, as amended, 47 U.S.C. 254.

(n) The term ''USF Administrator'' means the administrator of the universal service mechanisms appointed pursuant to section 54.701 of the Commission's rules, 47 CFR 54.701.

§ 16.105 What does this part do?

In this part, the Federal Communications Commission (''FCC'' or ''Commission'') adopts, as Commission policies, procedures, and requirements for nonprocurement debarment and suspension, the Guidelines in subparts A through I of 2 CFR part 180, as supplemented by this part. This adoption thereby gives regulatory effect for the FCC to the Guidelines, as supplemented by this part. All persons affected by these rules should consult the Guidelines in subparts A through I of 2 CFR part 180 in order to be informed of all the provisions of the suspension and debarment rules (as supplemented by this part).

§ 16.110 Does this part apply to me?

This part and, through this part, pertinent portions of subparts A through I of 2 CFR part 180 (see table at 2 CFR 180.100(b)), apply to you if you are a—

(a) ''Participant'' or ''principal'' in a ''covered transaction'' under subpart B of 2 CFR part 180, as supplemented by this part;

(b) Respondent in a Commission suspension or debarment action;

(c) Commission debarment or suspension official; or

(d) Commission official, or agent, authorized to enter into any type of nonprocurement transaction that is a covered transaction.

§ 16.115 What policies and procedures must I follow?

The Commission policies and procedures that you must follow are the policies and procedures specified in each applicable section of the Guidelines in subparts A through I of 2 CFR part 180, as that section is supplemented by this part. The transactions that are covered transactions, for example, are specified by section 220 of the Guidelines (*i.e.,* 2 CFR 180.220), as supplemented by section 16.220 in this part. For any section of Guidelines in subparts A through I of 2 CFR 180.5 that has no corresponding section in this part, Commission policies and procedures are those in the Guidelines.

§ 16.120 Who in the Commission may grant an exception to let an excluded person participate in a covered transaction? And what considerations should be relevant?

(a) The Chairman of the Commission or designee may grant an exception permitting an excluded person to participate in a particular covered transaction. If the Chairman or a designee grants an exception, the exception must be in writing and state the reason(s) for deviating from the governmentwide policy in Executive Order 12549.

(b) In evaluating whether to grant an exception, the Chairman or designee shall consider whether the excluded person, if a provider of services under any Commission program, may be the sole source of services in any affected areas and whether, as a result, the exclusion of that person could put consumers and/or program beneficiaries at risk of losing services. The Chairman

or designee may exercise their discretion in considering any other factors that may be relevant to the exception determination, and if an exception is granted, shall explain those considerations in any exception decision.

(c) When a person is excluded by another agency, the Chairman or designee may also grant an exception for a limited time period to afford the Commission an opportunity to evaluate the effect of the exclusion on program beneficiaries.

(d) Any exception granted under this section may also be subject to appropriate conditions, such as the agreement by the excepted person to mandatory audits, additional reporting requirements, compliance plans or monitoring, or similar forms of oversight in addition to those otherwise provided by the FCC programs.

§ 16.125 What are exempted Commission transactions?

Any transactions involving the Commission that are not related to or do not arise in connection with the USF Programs, the TRS Programs, or the NDBEDP shall be exempted transactions under this part.

Subpart B—Covered Transactions

§ 16.200 What additional transactions are covered transactions?

For purposes of determining what is a covered transaction under 2 CFR 180.200 of the Guidelines, this part applies to any transaction at the primary tier between a person and the Commission or any agents of the Commission, including the USF Administrator, which administers the USF programs as agent for the Commission, the TRS Fund Administrator, which administers the TRS programs as agent for the Commission, and the NDBEDP Administrator, which administers the NDBEDP, as agent for the Commission. For purposes of 2 CFR 180.200, any transactions between two primary tier participants (as clarified by section 16.340 in this part), other than the Commission, shall be considered to be a transaction at a lower tier within the meaning of subsection (b) of 2 CFR 180.200.

§ 16.220 What contracts and subcontracts, in addition to those listed in 2 CFR 180.220, are covered transactions?

In addition to the contracts covered under 2 CFR 180.220 of the Guidelines, this part applies to additional lower tiers of transactions supported by the Commission's programs involving the participants described below. This rule extends the coverage of the Commission nonprocurement suspension and debarment requirements to all lower tiers of contracts or subcontracts (regardless of tier) awarded under covered nonprocurement transactions, as permitted under the Guidelines at 2 CFR 180.220(c) (see optional lower tier coverage in the figure in the appendix to 2 CFR part 180).

(a) For the High-Cost Program, contractors, subcontractors, suppliers, consultants, or their agents or representatives for High-Cost supported transactions, if:

(1) Such person has a material role relating to, or significantly affecting, claims for disbursements related to the program;

(2) Such person is considered a ''principal''; or

(3) The amount of the transaction is expected to be at least $25,000.

(b) For the Lifeline Program:

(1) Any participant in the Lifeline program (except for the primary tier carrier), regardless of tier or dollar value, that is reimbursed based on the number of Lifeline subscribers enrolled, commissions, or any combination thereof; and

(2) Contractors, subcontractors, suppliers, consultants, or their agents or representatives and third-party marketing organizations for Lifeline-supported transactions, if

(i) Such person has a material role relating to, or significantly affecting, claims for disbursements related to the program;

(ii) Such person is considered a ''principal''; or

(iii) The amount of the transaction is expected to be at least $25,000.

(c) For the E-Rate Program, contractors, subcontractors, suppliers, consultants, or their agents or representatives for E-Rate-supported transactions if:

(1) Such person has a material role relating to, or significantly affecting, claims for disbursements related to the program;

(2) Such person is considered a ''principal''; or

(3) The amount of the transaction is expected to be at least $25,000.

(d) For the RHC Program, contractors, subcontractors, suppliers, consultants, or their agents or representatives for RHC-supported transactions if:

(1) Such person has a material role relating to, or significantly affecting, claims for disbursements related to the program;

(2) Such person is considered a ''principal''; or

(3) The amount of the transaction is expected to be at least $25,000.

(e) For the TRS Programs and the NDBEDP, contractors, subcontractors, suppliers, consultants, or their agents or representatives for TRS- or NDBEDP-supported transactions, if:

(1) Such person has a material role relating to, or significantly affecting, claims for disbursements related to the program;

(2) Such person is considered a ''principal''; or

(3) The amount of the transaction is expected to be at least $25,000. For the TRS programs (other than TRS that is provided through state programs) and the NDBEDP, the service providers are the certificated entities that are reimbursed by the Commission and the TRS Fund administrator for providing services and equipment under the covered transactions. For TRS that is provided through state TRS programs, the service providers are the TRS providers that are authorized by each state to provide intrastate TRS under the state program and that, accordingly, are compensated by the TRS Fund for the provision of interstate TRS.

Subpart C—Responsibilities of Participants Regarding Transactions Doing Business With Other Persons

§ 16.300 What must I do before I enter into a covered transaction with another person at the next lower tier? (FCC supplement to 2 CFR 180.300)

(a) You, as a participant, are responsible for determining whether you are entering into a covered transaction with an excluded or disqualified person. You may decide the method by which you do so using any of the methods described in 2 CFR 180.300.

(b) In the case of an employment contract, the FCC does not require employers to check the SAM Exclusions before making salary payments pursuant to that contract.

§ 16.330 What methods must I use to pass requirements down to participants at lower tiers with whom I intend to do business?

To communicate the requirements to lower tier participants, you must include a term or condition in the transaction requiring compliance with subpart C of the Guidelines in 2 CFR part 180, as supplemented by this subpart.

§ 16.335 Additional information disclosures for lower tier participants.

(a) Before entering into a covered transaction at any lower tier, all lower tier participants shall be obligated to notify and disclose to the higher tier participant with whom it is doing business the information described in 2

CFR 180.335 (pertaining to disclosures by primary tier participants). If the lower tier participant is participating in competitive bidding to provide services to the higher tier participant, such information must be disclosed at the time the bid is submitted. Any such disclosures must be simultaneously submitted to the USF Administrator (for transactions related to or arising in connection with USF programs), to the TRS Fund Administrator (for transactions relating to TRS programs), to the NDBEDP Administrator (for transactions relating to the NDBEDP) and to the FCC (at the addresses identified in paragraph (b) of this section). Any disclosures made under this rule will not necessarily cause other participants to deny your participation in the covered transaction, but will be considered a relevant factor in evaluating the transaction. The provisions of 2 CFR 180.345 shall be applicable to any failures to disclose under this rule and, in addition, any such failure to disclose shall permit the higher tier participant (with whom the lower tier participant is doing business) to terminate the transaction for failure to comply with its terms and condition, or to pursue any other available remedies. Participants subject to this rule shall also comply with 2 CFR 180.350, requiring notifications upon learning new information, and such notifications shall be provided not only to the USF Administrator, the TRS Fund Administrator, the NDBEDP Administrator, and to the FCC, but also to the higher tier participant (with whom the lower tier participant is doing business).

(b) The disclosures required by 2 CFR 180.335 through 180.350 of the Guidelines shall be made not only to the Commission, but also to the USF Administrator (for transactions related to or arising in connection with USF Programs), to the TRS Fund Administrator (for transactions relating to TRS Programs), and to the NDBEDP Administrator (for transactions relating to the NDBEDP). Disclosures to the Commission regarding the USF Program shall be submitted via email to [address] or via mail to the Federal Communications Commission, Telecommunications Access Policy Division, Wireline Competition Bureau, at the Commission's address specified in 47 CFR 0.401(a). Disclosures to the USF Administrator shall be submitted via email to [address] or via mail to: Universal Service Administrative Co., 700 12th Street NW, Suite 900, Washington, DC 20005. Disclosures to the TRS Fund Administrator shall be submitted via email to [address] or to: TRS Fund Administrator, 4450 Crums Mill Road, Suite 303, Harrisburg, PA 17110. Disclosures to the NDBEDP Administrator shall be submitted via email to [address] or to: NDBEDP Administrator, Federal Communications Commission, Disability Rights Office, at the Commission's address specified in 47 CFR 0.401(a).

§ 16.340 Clarification of tiers related to Commission programs.

(a) For the E-Rate Program and the Rural Health Care Program, the primary tier participants shall be both the schools or libraries (or consortia) that submit applications to the USF Administrator (for the E-Rate program) or the health care providers (including consortia) that submit applications to the USF Administrator (for the Rural Health Care Program), as well as the service providers selected by these applicants.

(b) For the High-Cost Program, the Lifeline Program, and the TRS Programs, the primary tier participants shall be the service providers that request and receive support from the USF Administrator and TRS Fund Administrator, respectively.

(c) For the NDBEDP, the primary tier participants shall be the certified programs that request and receive reimbursements from the NDBEDP Administrator.

Subpart D—Responsibilities of Federal Agency Officials Regarding Transactions

§ 16.435 What method should the Commission or participants use to implement the requirements described in the Guidelines at 2 CFR 180.435?

To implement the requirements described in 2 CFR 180.435, the Commission may require as a condition of participation in the USF or TRS programs or the NDBEDP that participants:

(a) Comply with subpart C of 2 CFR part 180, as supplemented by this part, and

(b) Communicate the requirement to comply with subpart C of 2 CFR part 180, as supplemented by this part, to persons at the next lower tier with whom the participant enters into covered transactions. The Commission, or the USF, TRS Fund, or NDBEDP Administrators, may also obtain an assurance or certification of compliance at the time of application for approval of the covered transaction or upon submission of an invoice for payment.

§ 16.440 Who conducts fact finding for FCC suspensions?

In all FCC suspensions, the official designated as the Suspending Official shall be responsible for conducting additional proceedings where disputed material facts are challenged unless another person is designated to serve as fact finder by the Chairman of the Commission.

§ 16.445 Who conducts fact finding for FCC debarments?

In all FCC debarments, the official designated as the Debarring Official shall be responsible for conducting additional proceedings where disputed material facts are challenged unless another person is designated to serve as fact finder by the Chairman of the Commission.

§ 16.450 What additional factors should the Commission consider for suspension or debarment determinations?

(a) In addition to the causes for debarment described under the Guidelines at 2 CFR 180.800 (which are also applicable to suspension determinations under 2 CFR 180.700), the suspending or debarment official may also take the following factors into consideration: Whether the person is a repeat offender of Commission rules; habitual non-payment or under-payment of Commission regulatory fees or of required contributions to FCC programs such as USF or TRS; the willful or grossly negligent submission of FCC forms or statements or other documentation to the FCC or to the USF Administrator, TRS Fund Administrator, or NDBEDP Administrator that result in or could result in overpayments of federal funds to the recipients; the willful or grossly negligent violation of a statutory or regulatory provision applicable to the USF programs, TRS program or the NDBEDP; and the willful or habitual failure to respond to requests made by the FCC or the USF, TRS Fund, or NDBEDP administrators for additional information to justify payment or continued operation under their certifications.

(b) As used in the Guidelines at 2 CFR 180.800(b), the term ''public agreement or transaction'' shall encompass contracts between USF program applicants and their selected service providers and/or consultants or other principals.

§ 16.455 What Commission alternatives to suspension or debarment may be appropriate?

If the suspending or debarment official determines that circumstances justify an alternative to suspension or

debarment, such as when a participant's suspension or debarment could have a substantial detrimental impact on the provision of services under a Commission program, then the official, in his or her discretion, may temporarily suspend the suspension or debarment proceedings and refer the case to [the Chief, Enforcement Bureau]. The [Chief] shall have discretion to evaluate and decide whether, in lieu of suspension or debarment, the [Enforcement Bureau] or Commission should condition the participant's continued participation upon agreement to additional requirements on the transaction that may include, among other things, transitioning beneficiaries to other providers, replacing principals, or agreeing to an appropriate compliance plan (with strict oversight and audits).

§ 16.460 What must I do to be reinstated after my period of debarment is over?

A debarment official may determine that a person's conduct is so egregious that the debarred party must petition for readmission into FCC programs after the debarment period is over. In that case, the debarred party as petitioner must demonstrate that it has taken sufficient remedial actions to avoid future program violations. In the absence of such a determination in the debarment decision, reinstatement will be automatic once the debarment period is over.

Subpart E—Limited Denial of Participation

§ 16.501 What is a limited denial of participation?

A limited denial of participation excludes a specific person from participating in a specific FCC program or programs for a specific period of time. The decision to impose a limited denial of participation is discretionary and based on the best interests of the federal government. For purposes of this subpart, the term ''person'' shall have the same meaning as set forth in 2 CFR 180.985.

§ 16.503 Who may issue a limited denial of participation?

The Chairperson designates FCC officials who are authorized to impose a limited denial of participation affecting any participant, or their affiliates, or both. A limited denial of participation is normally issued by the chief of a bureau responsible for administering an FCC program.

§ 16.505 When may a Commission official issue a limited denial of participation?

(a) An authorized FCC official may issue a limited denial of participation against a person, based upon adequate evidence of any of the following causes:

(1) Approval of an applicant for a USF Program, a TRS Program, or the NDBEDP would constitute an unsatisfactory risk;

(2) There are irregularities in a person's current and/or past performance in an FCC program;

(3) The person has failed to honor contractual obligations or abide by FCC regulations associated with an FCC program;

(4) The person has documented deficiencies in ongoing FCC programs;

(5) The person has made a false certification in connection with any FCC program, whether or not the certification was made directly to the FCC;

(6) The person has committed any act or omission that would be cause for debarment under 2 CFR 180.800;

(7) The person has violated any law, regulation, or procedure relating to an FCC program; or

(8) The person has made or procured to be made any false statement for the purpose of influencing in any way an action of the Commission.

(b) Filing of a criminal indictment or information shall constitute adequate evidence for the purpose of limited denial of participation actions. The indictment or information need not be based on offenses against the Commission.

(c) Imposition of a limited denial of participation related to any other FCC program shall constitute adequate evidence for a concurrent limited denial of participation for another FCC program. Where such a concurrent limited denial of participation is imposed, participation may be restricted on the same basis without the need for an additional conference or further hearing.

(d) An affiliate or organizational element may be included in a limited denial of participation solely on the basis of its affiliation, and regardless of its knowledge of or participation in the acts providing cause for the sanction. The burden of proving that a particular affiliate or organizational element is not controlled by the primary sanctioned party (or by an entity that itself is controlled by the primary sanctioned party) is on the affiliate or organizational element. For purposes of this subsection, the term ''affiliate'' shall have the same meaning as provided by 2 CFR 180.905.

§ 16.507 When does a limited denial of participation take effect?

A limited denial of participation is effective immediately upon issuance of the notice unless the notice otherwise specifies.

§ 16.509 How long may a limited denial of participation last?

A limited denial of participation may remain in effect up to 12 months.

§ 16.511 How does a limited denial of participation start?

A limited denial of participation is made effective by providing the person, and any specifically named affiliate, with notice:

(a) That the limited denial of participation is being imposed;

(b) Of the cause(s) under § 16.505 of this part for the sanction;

(c) Of the potential effect of the sanction, including the length of the sanction and the FCC program(s) and geographic area (if relevant) affected by the sanction;

(d) Of the right to request, in writing, within 30 days of receipt of the notice, a conference under § 16.513(a) of this part; and

(e) Of the right to contest the limited denial of participation under § 16.513 of this part.

§ 16.513 How may I contest my limited denial of participation?

(a) Within 30 days after receiving a notice of limited denial of participation, you may request a conference with the official who issued such notice. The conference shall be held within 15 days after the Commission's receipt of the request for a conference, unless you waive this time limit. The official or designee who imposed the sanction shall preside. At the conference, you may appear with a representative and may present all relevant information and materials to the official or designee. Within 20 days after the conference, or within 20 days after any agreed-upon extension of time for submission of additional materials, the official or designee shall, in writing, advise you of the decision to terminate, modify, or affirm the limited denial of participation. If all or a portion of the remaining period of exclusion is affirmed, the notice of affirmation shall advise you of the opportunity to contest the notice and to request a hearing before an attorney within the Enforcement Bureau so designated for this function by the Chairman of the Commission. You have 30 days after receipt of the notice of affirmation to request this hearing.

(b) You may skip the conference with the official and you may request a hearing before an attorney within the Enforcement Bureau so designated for this function by the Chairman of the Commission. This must also be done

within 30 days after receiving a notice of limited denial of participation. If you opt to have a hearing before an attorney within the Enforcement Bureau, you must submit your request to [address]. The designated attorney within the Enforcement Bureau will issue findings of fact and make a recommended decision. The sanctioning official who issued the initial notice will then make a final decision, as promptly as possible, after the recommended decision is issued. The sanctioning official may reject the recommended decision or any findings of fact, only after specifically determining that the decision or any of the facts are arbitrary, capricious, or clearly erroneous.

(c) In deciding whether to terminate, modify, or affirm a limited denial of participation, the Commission official or designee may consider the factors listed at 2 CFR 180.860. The designated attorney within the Enforcement Bureau may also consider the factors listed at 2 CFR 180.860 in making any recommended decision.

§ 16.515 Do Federal agencies coordinate limited denial of participation actions?

Federal agencies do not coordinate limited denial of participation actions. As stated in § 16.501 of this part, a limited denial of participation is an FCC-specific action and applies only to FCC activities.

§ 16.517 What is the scope of a limited denial of participation?

The scope of a limited denial of participation is as follows:

(a) A limited denial of participation generally extends only to participation in the program(s) under which the cause arose. A limited denial of participation may, at the discretion of the authorized official, extend to other programs, initiatives, or functions within the jurisdiction of the FCC. The authorized official, however, may determine that where the sanction is based on an indictment or conviction, the sanction shall apply to all programs throughout the FCC.

(b) For purposes of this subpart, participation includes receipt of any benefit or financial assistance through subsidies, grants, or contractual arrangements; benefits or assistance in the form of any loan guarantees or insurance; awards of procurement contracts; or any other arrangements that benefit a participant in a covered transaction.

(c) The sanction may be imposed for a period not to exceed 12 months, and may be imposed on either a nationwide or a more restricted basis.

§ 16.519 May the FCC impute the conduct of one person to another in a limited denial of participation?

For purposes of determining a limited denial of participation, the Commission may impute conduct as follows:

(a) Conduct imputed from an individual to an organization. The Commission may impute the fraudulent, criminal, or other improper conduct of any officer, director, shareholder, partner, employee, or other individual associated with an organization, to that organization when the improper conduct occurred in connection with the individual's performance of duties for or on behalf of that organization, or with the organization's knowledge, approval, or acquiescence. The organization's acceptance of the benefits derived from the conduct is evidence of knowledge, approval, or acquiescence.

(b) Conduct imputed from an organization to an individual or between individuals. The Commission may impute the fraudulent, criminal, or other improper conduct of any organization to an individual, or from one individual to another individual, if the individual to whom the improper conduct is imputed participated in, had knowledge of, or had reason to know of the improper conduct.

(c) Conduct imputed from one organization to another organization. The Commission may impute the fraudulent, criminal, or other improper conduct of one organization to another organization when the improper conduct occurred in connection with a partnership, joint venture, joint application, association, or similar arrangement, or when the organization to whom the improper conduct is imputed has the power to direct, manage, control, or influence the activities of the organization responsible for the improper conduct. Acceptance of the benefits derived from the conduct is evidence of knowledge, approval, or acquiescence.

§ 16.521 What is the effect of a suspension or debarment on a limited denial of participation?

If you have submitted a request for a hearing pursuant to § 16.513(b) of this part, and you also receive, pursuant to subpart A of this part, a notice of proposed debarment or suspension that is based on the same transaction(s) or the same conduct as the limited denial of participation, as determined by the debarring or suspending official, the following rules shall apply:

(a) During the 30-day period after you receive a notice of proposed debarment or suspension, during which you may elect to contest the debarment under 2 CFR 180.815, or the suspension pursuant to 2 CFR 180.720, all proceedings in the limited denial of participation, including discovery, are automatically stayed.

(b) If you do not contest the proposed debarment pursuant to 2 CFR 180.815, or the suspension pursuant to 2 CFR 180.720, the final imposition of the debarment or suspension shall also constitute a final decision with respect to the limited denial of participation, to the extent that the debarment or suspension is based on the same transaction(s) or conduct as the limited denial of participation.

(c) If you contest the proposed debarment pursuant to 2 CFR 180.815, or the suspension pursuant to 2 CFR 180.720, then:

(1) Those parts of the limited denial of participation and the debarment or suspension based on the same transaction(s) or conduct, as determined by the debarring or suspending official, shall be immediately consolidated before the debarring or suspending official.

(2) Proceedings under the consolidated portions of the limited denial of participation shall be stayed before the hearing officer until the suspending or debarring official makes a determination as to whether the consolidated matters should be referred to a hearing officer. Such a determination must be made within 90 days of the date of the issuance of the suspension or proposed debarment, unless the suspending/debarring official extends the period for good cause.

(3) If the suspending or debarring official determines that there is a genuine dispute as to material facts regarding the consolidated matter, the entire consolidated matter will be referred to the designated hearing official within the Enforcement Bureau hearing the limited denial of participation, for additional proceedings pursuant to 2 CFR 180.750 or 180.845.

(4) If the suspending or debarring official determines that there is no dispute as to material facts regarding the consolidated matter, jurisdiction of the designated attorney within the Enforcement Bureau to hear those parts of the limited denial of participation based on the same transaction[s] or conduct as the debarment or suspension, as determined by the debarring or suspending official, will be transferred to the debarring or suspending official, and the hearing officer responsible for hearing the limited denial of participation shall transfer the administrative record to the debarring or suspending official.

(5) The suspending or debarring official shall hear the entire consolidated case under the procedures governing suspensions and debarments, and shall issue a final decision as to both the limited denial of participation and the suspension or debarment.

§ 16.523 What is the effect of a limited denial of participation on a suspension or a debarment?

The imposition of a limited denial of participation does not affect the right of the Commission to suspend or debar any person under this part.

§ 16.525 May a limited denial of participation be terminated before the term of the limited denial of participation expires?

If the cause for the limited denial of participation is resolved before the expiration of the 12–month period, the official who imposed the sanction may terminate it.

§ 16.527 How is a limited denial of participation reported?

When a limited denial of participation has been made final, or the period for requesting a conference pursuant to section 16.513(a) has expired without receipt of such a request, the official imposing the limited denial of participation shall notify the Enforcement Bureau and the USF Administrator, the TRS Fund Administrator and the NDBEDP Administrator of the scope of the limited denial of participation.

Federal Communications Commission.

Katura Jackson,

Federal Register Liaison Officer.

[FR Doc. 2019–28490 Filed 1–13–20; 8:45 am]

BILLING CODE 6712–01–P

DEPARTMENT OF DEFENSE

Defense Acquisition Regulations System

48 CFR Parts 227, 239, and 252

[Docket DARS–2019–0067]

RIN 0750–AK87

Defense Federal Acquisition Regulation Supplement: Noncommercial Computer Software (DFARS Case 2018–D018)

AGENCY: Defense Acquisition Regulations System, Department of Defense (DoD).

ACTION: Advance notice of proposed rulemaking; notification of meeting.

SUMMARY: DoD is seeking information that will assist in the development of a revision to the Defense Federal Acquisition Regulation Supplement (DFARS) to implement a section of the National Defense Authorization Act for Fiscal Year 2018, which establishes considerations for the acquisition of all noncommercial computer software, related data and documentation, and associated license rights. In addition to the request for written comments on this advance notice of proposed rulemaking, DoD will hold a public meeting to hear the views of interested parties.

DATES: *Comment Date:* Interested parties should submit written comments to the address shown below on or before March 16, 2020, to be considered in the formation of any proposed rule.

Public Meeting Date: The public meeting will be held on February 18, 2020, from 10:00 a.m. to 1:00 p.m., Eastern time. The public meeting will end at the stated time, or when the discussion ends, whichever comes first. Further information for the public meeting may be found under the heading **SUPPLEMENTARY INFORMATION.**

Registration Date: Registration to attend the public meeting must be received no later than close of business on February 11, 2020.

ADDRESSES: *Public Meeting:* The public meeting will be held in the Pentagon Library and Conference Center (PLCC), Conference Room B6, 1155 Defense Pentagon, Washington, DC 20301. Conference Room B6 is located on the lower level of the PLCC.

Submission of Comments: Submit written comments identified by DFARS Case 2018–D018, using any of the following methods:

○ *Federal eRulemaking Portal: http://www.regulations.gov.* Search for ''DFARS Case 2018–D018.'' Select ''Comment Now'' and follow the instructions provided to submit a comment. Please include ''DFARS Case 2018–D018'' on any attached documents.

○ *Email: osd.dfars@mail.mil.* Include DFARS Case 2018–D018 in the subject line of the message.

○ *Fax:* 571–372–6094.

○ *Mail:* Defense Acquisition Regulations System, Attn: Ms. Jennifer D. Johnson, OUSD(A&S)DPC/DARS, Room 3B941, 3060 Defense Pentagon, Washington, DC 20301–3060.

Comments received generally will be posted without change to *http://www.regulations.gov,* including any personal information provided. To confirm receipt of your comment(s), please check *www.regulations.gov,* approximately two to three days after submission to verify posting (except allow 30 days for posting of comments submitted by mail).

FOR FURTHER INFORMATION CONTACT: Ms. Jennifer D. Johnson, telephone 571–372–6100.

SUPPLEMENTARY INFORMATION:

I. Background

DoD is seeking information from experts and interested parties in Government and the private sector that will assist in the development of a revision to the DFARS to implement 10 U.S.C. 2322a, which was added by section 871 of the National Defense Authorization Act (NDAA) for Fiscal Year (FY) 2018 (Pub. L. 115–91). Section 10 U.S.C. 2322a requires that, as part of any negotiation for an acquisition of noncommercial computer software, the Secretary of Defense consider to the maximum extent practicable during the appropriate time in the life cycle, all the noncommercial and related materials necessary to meet the needs of the agency. As a result, any noncommercial computer software or related materials identified should be acquired to the extent appropriate.

II. Public Meeting

DoD is hosting a public meeting to obtain the views of experts and interested parties in Government and the private sector regarding amending the DFARS to implement statutory amendments and revise policies and procedures for acquisition of all noncommercial computer software, related data and documentation, and associated license rights. DoD also seeks to obtain information on the potential increase or decrease in public costs or savings that would result from such amendments to the DFARS.

Registration: To facilitate security screening and entry to the PLCC, individuals wishing to attend the public meeting must register by close of business on the date listed in the **DATES** section of this document, by sending the following information via email to *osd.dfars@mail.mil:*

(1) Full name.

(2) Valid email address.

(3) Valid telephone number.

(4) Company or organization name.

(5) Whether the individual is a U.S. citizen.

(6) The date of the public meeting the individual wishes to attend.

(7) Whether the individual intends to make a presentation, and, if so, the individual's title.

Building Entry: Upon receipt of an email requesting registration, the Defense Acquisition Regulations System will provide notification to the Pentagon Force Protection Agency (PFPA) that the individual is requesting approval for entry to the PLCC on the date provided.

PFPA will send additional instructions to the email address provided in the request for registration. The registrant must follow the instructions in the PFPA email in order to be approved for entry to the PLCC; failure to follow the instructions in the PFPA email may result in the registrant being restricted from entry to the Pentagon to attend the public meeting.

One valid government-issued photo identification card (*i.e.,* driver's license or passport) will be required in order to enter the building.

Attendees are encouraged to arrive at least 45 minutes prior to the start of the meeting to accommodate security procedures.

Public parking is not available at the PLCC.

Presentations: If you wish to make a presentation, please submit an electronic copy of your presentation to *osd.dfars@mail.mil* no later than the registration date listed in the **DATES** section of this document. Each presentation should be in PowerPoint to facilitate projection during the public meeting and should include the presenter's name, organization affiliation, telephone number, and email address on the cover page. Please submit presentations only and cite ''Public Meeting, DFARS Technical Data Rights Cases'' in all correspondence related to the public meeting. There will be no transcription at the meeting. The submitted presentations will be the only record of the public meeting and will be posted to the following website at the conclusion of the public meeting: *https://www.acq.osd.mil/dpap/dars/technical_data_rights.html.*

Special accommodations: The public meeting is physically accessible to persons with disabilities. Requests for reasonable accommodations, sign language interpretation, or other auxiliary aids should be directed to Valencia Johnson, telephone 571–372–6099, by no later than the registration date listed in the **DATES** section of this document.

The TTY number for further information is: 1–800–877–8339. When the operator answers the call, let the operator know the agency is the Department of Defense and the point of contact is Valencia Johnson at 571–372–6099.

III. Discussion and Analysis

An initial draft of the proposed revisions to the DFARS to implement section 871 of the NDAA for FY 2018 is available in the Federal eRulemaking Portal at *http://www.regulations.gov,* by searching for ''DFARS Case 2018–D018'', selecting ''Open Docket Folder'' for RIN 0750–AK87, and viewing the ''Supporting Documents''. The following is a summary of DoD's proposed approach and the feedback DoD is seeking from industry and the public.

A. Requirement for consideration of certain matters during acquisition of noncommercial computer software. The primary proposed changes to implement 10 U.S.C. 2322a would revise DFARS 227.7203–2. The requirements of subsection (a) of 10 U.S.C. 2322a are added to DFARS 227.7203–2(b) to require that, to the maximum extent practicable, the Government's needs determinations must address the acquisition at appropriate times in the life cycle of all computer software, related data, and associated license rights necessary to meet the Government's needs for specific computer software life cycle activities (*e.g.,* reproducing, building, recompiling, testing, and deploying the software).

The requirements of subsection (b) of 10 U.S.C. 2322a are proposed to be added as a new paragraph (6) under DFARS 227.7203–2(c), to require that noncommercial computer software or data required to be delivered as a result of the considerations addressed during the needs determination (as revised at 227.7203–2(b)), to the extent appropriate, includes:

- Computer software delivered in a digital format compatible with applicable computer programs on relevant system hardware; and
- All necessary external or additional computer software or data, along with all necessary license rights; or
- Delivery of sufficient information to support maintenance and understanding of interfaces and software revision history, along with all necessary license rights, if the necessary external or additional computer software or data will not be delivered.

The proposed implementation of these new requirements includes adaptations of the statutory language intended to take advantage of existing DFARS defined terms and nomenclature, and to better support the implementation of the statutory objectives in DoD acquisitions. For example, although the statute focuses on detailed aspects of the delivery requirements for noncommercial computer software, the proposed DFARS revisions also recognize that the Government must consider and acquire appropriate license rights in order to utilize those deliverables. Accordingly, references to ''necessary license rights'' or ''associated license rights'' are included throughout the proposed implementation.

Additionally, the proposed revisions use the established DFARS defined term ''computer program'' in place of the statutory reference to ''working computer software system binary files,'' and add a new definition for the term ''data.'' The new definition for the term ''data'' is proposed for inclusion in DFARS 227.001, and is an adaptation of the definition of that term in FAR 52.227–14(a). As a result, the definition of ''technical data'' at DFARS 252.227–7013(a)(15), 252.227–7015(a)(5), and 252.227–7018(a)(20) is revised slightly to avoid an inconsistent use of the term ''data.''

The proposed revisions also add appropriate cross-references to the new proposed implementing coverage. For example, a new paragraph was added to DFARS 227.7202–1(d), so that factors identified in 227.7203–2(b) and (c), when adapted as appropriate, are considered for commercial computer software and computer software documentation. In addition, DFARS 239.101 is revised to add a reference to the coverage of noncommercial computer acquisitions in 227.7203.

B. Section 813 Panel Final Report of the Government-Industry Advisory Panel on Technical Data Rights.

The proposed revisions to DFARS 227.7203–2 also address concerns raised in the Final Report of the Government-Industry Advisory Panel on Technical Data Rights (Section 813 Panel) submitted to the Congressional Defense Committees in mid-November 2018. For example, the 813 Panel's Tension Point Paper No. 27, ''Failure to Define and Order CDRLs (Reliance on Deferred Ordering and DAL to Obtain Data),'' emphasizes the importance of the Government identifying its data needs early in the program life cycle, and a preference for upfront ordering of data rather than relying on mechanisms such as deferred ordering pursuant to DFARS 252.227–7027. The paper suggests that the Government's approach to data ordering should be consistent with the program's intellectual property strategy, which should be developed and updated to account for potential changes in the life cycle sustainment plan.

C. Seeking Public Comment on Additional Topics.

In addition to seeking public comment on the substance of the draft DFARS revisions, DoD is also seeking information regarding any corresponding change in the burden, including associated costs or savings, resulting from contractors and subcontractors complying with the draft

revised DFARS implementation. More specifically, DoD is seeking information regarding any anticipated increase or decrease in such burden and costs relative to the burden and costs associated with complying with the current DFARS implementing language.

IV. Executive Orders 12866 and 13563

Executive Orders (E.O.s) 12866 and 13563 direct agencies to assess all costs and benefits of available regulatory alternatives and, if regulation is necessary, to select regulatory approaches that maximize net benefits (including potential economic, environmental, public health and safety effects, distributive impacts, and equity). E.O. 13563 emphasizes the importance of quantifying both costs and benefits, of reducing costs, of harmonizing rules, and of promoting flexibility. This is not a significant regulatory action and, therefore, was not subject to review under section 6(b) of E.O. 12866, Regulatory Planning and Review, dated September 30, 1993. This rule is not a major rule under 5 U.S.C. 804.

V. Executive Order 13771

This advance notice of proposed rulemaking is not subject to E.O. 13771.

List of Subjects in 48 CFR Part 227, 239, and 252

Government procurement.

Jennifer Lee Hawes,

Regulatory Control Officer, Defense Acquisition Regulations System.

[FR Doc. 2020–00430 Filed 1–13–20; 8:45 am]

BILLINGCODE 5001–06–P

Notices

Federal Register

Vol. 85, No. 9

Tuesday, January 14, 2020

This section of the FEDERAL REGISTER contains documents other than rules or proposed rules that are applicable to the public. Notices of hearings and investigations, committee meetings, agency decisions and rulings, delegations of authority, filing of petitions and applications and agency statements of organization and functions are examples of documents appearing in this section.

DEPARTMENT OF AGRICULTURE

Submission for OMB Review; Comment Request

January 9, 2020.

The Department of Agriculture has submitted the following information collection requirement(s) to OMB for review and clearance under the Paperwork Reduction Act of 1995, Public Law 104–13. Comments are requested regarding; whether the collection of information is necessary for the proper performance of the functions of the agency, including whether the information will have practical utility; the accuracy of the agency's estimate of burden including the validity of the methodology and assumptions used; ways to enhance the quality, utility and clarity of the information to be collected; and ways to minimize the burden of the collection of information on those who are to respond, including through the use of appropriate automated, electronic, mechanical, or other technological collection techniques or other forms of information technology.

Comments regarding this information collection received by February 13, 2020 will be considered. Written comments should be addressed to: Desk Officer for Agriculture, Office of Information and Regulatory Affairs, Office of Management and Budget (OMB), New Executive Office Building, 725—17th Street NW, Washington, DC 20502. Commenters are encouraged to submit their comments to OMB via email to: *OIRA_Submission@OMB.EOP.GOV* or fax (202) 395–5806 and to Departmental Clearance Office, USDA, OCIO, Mail Stop 7602, Washington, DC 20250–7602. Copies of the submission(s) may be obtained by calling (202) 720–8958.

An agency may not conduct or sponsor a collection of information unless the collection of information displays a currently valid OMB control number and the agency informs potential persons who are to respond to the collection of information that such persons are not required to respond to the collection of information unless it displays a currently valid OMB control number.

Animal and Plant Health Inspection Service

Title: Tuberculosis.

OMB Control Number: 0579–0146.

Summary of Collection: The Animal Health Protection Act (AHPA) of 2002 is the primary Federal law governing the protection of animal health. The law gives the Secretary of Agriculture broad authority to detect, control, or eradicate pests or diseases of livestock or poultry. The Secretary may also prohibit or restrict import or export of any animal or related material if necessary, to prevent the spread of any livestock or poultry pest or disease. The AHPA is contained in Title X, Subtitle E, Sections 10401–18 of Public Law 107–171, May 13, 2002, of the Farm Security and Rural Investment Act of 2002.

Disease prevention is the most effective method for maintaining a healthy animal population and enhancing the U.S. Department of Agriculture's Animal and Plant Health Inspection Service (APHIS), Veterinary Services' (VS) ability to allow U.S. animal producers to compete in the world market of animal and animal product trade.

The APHIS bovine tuberculosis (TB) regulations in Title 9, Code of Federal Regulations (9 CFR), Part 77, provide for the assignment of State TB risk classifications, the creation of TB risk status zones within the same State, and for the conduct of tests before regulated animals are permitted to move interstate. This system enhances the ability of States to move healthy, TB-free cattle, bison, and captive cervids interstate as well as internationally. Additionally, this zoning/testing system enhances the effectiveness of APHIS' TB Eradication Program by decreasing the likelihood that infected animals will be moved interstate or internationally. Both types of actions prevent the spread of TB and provide mechanisms to help VS trace, locate, and eradicate any outbreaks that occur.

Need and Use of the Information: APHIS will collect reports, requests, forms, certificates, plans, MOUs, permits, and records for zoning, testing, and animal movement. Without the information, APHIS would not be able to operate an effective bovine tuberculosis surveillance, containment, and eradication program.

Description of Respondents: Business or other for-profit; State, Local or Tribal Government.

Number of Respondents: 4,914.

Frequency of Responses: Recordkeeping; Reporting: On occasion.

Total Burden Hours: 27,830.

Ruth Brown,

Departmental Information Collection Clearance Officer.

[FR Doc. 2020–00377 Filed 1–13–20; 8:45 am]

BILLING CODE 3410–34–P

DEPARTMENT OF AGRICULTURE

Submission for OMB Review; Comment Request

January 9, 2020.

The Department of Agriculture has submitted the following information collection requirement(s) to OMB for review and clearance under the Paperwork Reduction Act of 1995, Public Law 104–13. Comments are required regarding; whether the collection of information is necessary for the proper performance of the functions of the agency, including whether the information will have practical utility; the accuracy of the agency's estimate of burden including the validity of the methodology and assumptions used; ways to enhance the quality, utility and clarity of the information to be collected; and ways to minimize the burden of the collection of information on those who are to respond, including through the use of appropriate automated, electronic, mechanical, or other technological collection techniques or other forms of information technology.

Comments regarding this information collection received by February 13, 2020 will be considered. Written comments should be addressed to: Desk Officer for Agriculture, Office of Information and Regulatory Affairs, Office of Management and Budget (OMB), New Executive Office Building, 725—17th Street NW, Washington, DC 20502. Commenters are encouraged to submit their comments to OMB via email to: *OIRA_Submission@OMB.EOP.GOV* or fax (202) 395–5806 and to Departmental Clearance Office, USDA, OCIO, Mail

Stop 7602, Washington, DC 20250–7602. Copies of the submission(s) may be obtained by calling (202) 720–8958.

An agency may not conduct or sponsor a collection of information unless the collection of information displays a currently valid OMB control number and the agency informs potential persons who are to respond to the collection of information that such persons are not required to respond to the collection of information unless it displays a currently valid OMB control number.

Farm Service Agency

Title: 2019 Market Facilitation Program Application.

OMB Control Number: 0560–0293.

Summary of Collection: This information collection is required for the Farm Service Agency (FSA) to make Market Facilitation Program (MFP) payments to domestic crop and commodity producers. Specifically, the Commodity Credit Corporation (CCC) Charter Act (15 U.S.C. 714c) authorizes CCC to assist in the disposition of surplus commodities and to increase the domestic consumption of agricultural commodities by expanding or aiding in the expansion of domestic markets or by developing or aiding in the development of new and additional markets, marketing facilities, and uses for such commodities. The purpose of 2019 MFP is to aid producers in the disposition of surplus commodities and aid in the expansion of domestic markets or aid in the development of new and additional markets and uses for the specific crops or commodities that are negatively impacted by actions of foreign governments.

Need and Use of the Information: In order to determine whether a producer is eligible for 2019 MFP and to calculate a payment, a producer is required to submit the following forms: CCC–913, Market Facilitation Program (MFP) 2019 Application, and CCC–913 continuation form for adding more information for Part D; CCC–941, Average Adjusted Gross Income (AGI) Certification, CCC–942 Request for an Exception to Average AGI limitation, and Consent to Disclosure of Tax Information; CCC–902, Farm Operating Plan for Payment Eligibility; FSA–578, Report of Acreage; and AD–1026, Highly Erodible Land Conservation (HELC) and Wetland Conservation Certification. Most applicants will already have FSA–578, CCC–902, CCC–941, and AD–1026 on file at the time of application; however, a percentage of applicants who have not previously participated in FSA programs may need to file these forms to become eligible. The new producers will complete the forms if have not yet filed with FSA. Lack of adequate information to make the determination could result in the improper administration and appropriation of CCC funds.

Description of Respondents: Farms.

Number of Respondents: 1,445,500.

Frequency of Responses: Reporting; Other (one-time).

Total Burden Hours: 550,317.

Ruth Brown,

Departmental Information Collection Clearance Officer.

[FR Doc. 2020–00397 Filed 1–13–20; 8:45 am]

BILLING CODE 3410–05–P

DEPARTMENT OF AGRICULTURE

Food Safety and Inspection Service

[Docket No. FSIS–2019–0030]

National Advisory Committee on Microbiological Criteria for Foods; Renewal

AGENCY: Food Safety and Inspection Service, USDA.

ACTION: Notice of intent to renew committee charter.

SUMMARY: In accordance with the Federal Advisory Committee Act, this notice is announcing the intention of the USDA and the U.S. Department of Health and Human Services (HHS) to renew the charter for the National Advisory Committee on Microbiological Criteria for Foods (NACMCF). The purpose of NACMCF is to provide impartial, scientific advice, and peer reviews to Federal food safety agencies for use in the development of an integrated national food safety systems approach that assures the safety of domestic, imported, and exported foods.

FOR FURTHER INFORMATION CONTACT: Karen Thomas, Advisory Committee Specialist, U.S. Department of Agriculture (USDA), Food Safety and Inspection Service (FSIS), Room 9–177B Patriots Plaza III, 1400 Independence Avenue SW, Washington, DC 20250–3700. Telephone number: (202) 690–6620.

SUPPLEMENTARY INFORMATION:

Background

The NACMCF was established in 1988, in response to a recommendation of the National Academy of Sciences for an interagency approach to microbiological criteria for foods, and in response to a recommendation of the U.S. House of Representatives Committee on Appropriations, as expressed in the Rural Development, Agriculture, and Related Agencies Appropriation Bill for fiscal year 1988. The NACMCF provides scientific advice and recommendations to the USDA and HHS on public health issues relative to the safety and wholesomeness of the U.S. food supply, including development of microbiological criteria and review and evaluation of epidemiological and risk assessment data and methodologies for assessing microbiological hazards in foods.

The USDA, in cooperation with HHS, is announcing its intent to renew the NACMCF's charter. The charter is available on the FSIS web page at *https://www.fsis.usda.gov/wps/portal/fsis/topics/data-collection-and-reports/nacmcf/committee-charter.* The renewal of NACMCF's charter is necessary and in the public interest because of the need for external expert advice on the range of scientific and technical issues that must be addressed by the USDA and HHS to ensure the safety of domestic, imported, and exported foods.

Members of NACMCF will be appointed by the Secretary of Agriculture after consultation with an Executive Committee that represents five participating Agencies in NACMCF: The Food Safety and Inspection Service (FSIS), the U.S. Food and Drug Administration (FDA), Centers for Disease Control and Prevention (CDC), the National Marine Fisheries Service (NMFS), and the Department of Defense's Defense Logistics Agency for advice on membership appointments. Because NACMCF reviews and evaluates complex issues, NACMCF is expected to meet one or more times per year.

Congressional Review Act

Pursuant to the Congressional Review Act at 5 U.S.C. 801 *et seq.,* the Office of Information and Regulatory Affairs has determined that this notice is not a ''major rule,'' as defined by 5 U.S.C. 804(2).

Additional Public Notification

FSIS will announce this notice online through the FSIS web page located at *http://www.fsis.usda.gov/regulations_&_policies/Federal_Register_Notices/index.asp.*

FSIS also will make copies of this **Federal Register** publication available through the FSIS *Constituent Update,* which is used to provide information regarding FSIS policies, procedures, regulations, **Federal Register** notices, FSIS public meetings, and other types of information that could affect or would be of interest to constituents and stakeholders. The *Constituent Update* is available on the FSIS web page.

Through the web page, FSIS is able to provide information to a much broader, more diverse audience. In addition, FSIS offers an email subscription service that provides automatic and customized access to selected food safety news and information. This service is available at *http://www.fsis.usda.gov/subscribe.* Options range from recalls to export information to regulations, directives, and notices. Customers can add or delete subscriptions themselves and have the option to password protect their accounts.

USDA Nondiscrimination Statement

No agency, officer, or employee of the USDA shall, on the grounds of race, color, national origin, religion, sex, gender identity, sexual orientation, disability, age, marital status, family/parental status, income derived from a public assistance program, or political beliefs, exclude from participation in, deny the benefits of, or subject to discrimination, any person in the United States under any program or activity conducted by the USDA.

How To File a Complaint of Discrimination

To file a complaint of discrimination, complete the USDA Program Discrimination Complaint Form, which may be accessed online at: *http://www.ocio.usda.gov/sites/default/files/docs/2012/Complain_combined_6_8_12.pdf,* or write a letter signed by you or your authorized representative.

Send your completed complaint form or letter to USDA by mail, fax, or email:

Mail: U.S. Department of Agriculture, Director, Office of Adjudication, 1400 Independence Avenue SW, Washington, DC 20250–9410.

Fax: (202) 690–7442.

Email: program.intake@usda.gov.

Persons with disabilities who require alternative means for communication (Braille, large print, audiotape, etc.), should contact USDA's TARGET Center at (202) 720–2600 (voice and TDD).

Done at Washington, DC on:
Dated: January 8, 2020.

Cikena Reid,

USDA Committee Management Officer.

[FR Doc. 2020–00337 Filed 1–13–20; 8:45 am]

BILLING CODE 3410–DM–P

COMMISSION ON CIVIL RIGHTS

Agenda and Notice of Public Meeting of the District of Columbia Advisory Committee

AGENCY: Commission on Civil Rights.

ACTION: Announcement of meeting.

SUMMARY: Notice is hereby given, pursuant to the provisions of the rules and regulations of the U.S. Commission on Civil Rights (Commission), and the Federal Advisory Committee Act (FACA), that a meeting of the District of Columbia Advisory Committee to the Commission will convene by conference call, at 11:30 a.m. (EST) Thursday, February 6, 2020. The purpose of the planning meeting is to discuss the status of minor clarifying edits from Committee members and expert presenters who participated in the DC Mental Health Court briefings; panel summaries prepared by several Committee members; assign members of the Drafting Workgroup who will prepare the draft report.

DATES: Thursday, February 6, 2020 at 11:30 a.m. (EST).

Public Call-In Information: Conference call number: 1–877–260–1479 and conference call ID number: 1929821.

FOR FURTHER INFORMATION CONTACT: Ivy L. Davis, at *ero@usccr.gov* or by phone at 202–376–7533.

SUPPLEMENTARY INFORMATION: Interested members of the public may listen to the discussion by calling the following toll-free conference call number: 1–877–260–1479 and conference call ID number: 1929821. Please be advised that before placing them into the conference call, the conference call operator may ask callers to provide their names, their organizational affiliations (if any), and email addresses (so that callers may be notified of future meetings). Callers can expect to incur charges for calls they initiate over wireless lines, and the Commission will not refund any incurred charges. Callers will incur no charge for calls they initiate over land-line connections to the toll-free telephone number herein.

Persons with hearing impairments may also follow the discussion by first calling the Federal Relay Service at 1–800–877–8339 and providing the operator with the toll-free conference call number: 1–877–260–1479 and conference call ID number: 1929821.

Members of the public are invited to make statements during the Public Comments section of the meeting or to submit written comments. The comments must be received in the regional office by Friday, March 6, 2020. Comments may be mailed to the Eastern Regional Office, U.S. Commission on Civil Rights, 1331 Pennsylvania Avenue, Suite 1150, Washington, DC 20425 or emailed to Evelyn Bohor at *ero@usccr.gov.* Persons who desire additional information may contact the Eastern Regional Office at 202–376–7533.

Records and documents discussed during the meeting will be available for public viewing as they become available at: *https://gsageo.force.com/FACA/FACAPublicViewCommitteeDetails?id=a10t0000001gzlKAAQ.* Please click the ''Meeting Details'' and ''Documents'' links. Records generated from this meeting may also be inspected and reproduced at the Eastern Regional Office, as they become available, both before and after the meeting. Persons interested in the work of this advisory committee are advised to go to the Commission's website, *www.usccr.gov,* or to contact the Eastern Regional Office at the above phone numbers, email or street address.

Agenda

Thursday, February 6, 2020, at 11:30 a.m. (EST)

I. Welcome and Rollcall
II. Planning Meeting
—discuss the status of minor clarifying edits from Committee members and expert presenters who participated in the DC Mental Health Court briefings
—discuss panel summaries prepared by several Committee members
—assign members to the Drafting Workgroup who will prepare the draft report
III. Other Business
IV. Next Planning Meeting
V. Public Comments
VI. Adjourn

Dated: January 8, 2020.

David Mussatt,

Supervisory Chief, Regional Programs Unit.

[FR Doc. 2020–00335 Filed 1–13–20; 8:45 am]

BILLING CODE P

COMMISSION ON CIVIL RIGHTS

Agenda and Notice of Public Meeting of the New Jersey Advisory Committee

AGENCY: Commission on Civil Rights.

ACTION: Announcement of meeting.

SUMMARY: Notice is hereby given, pursuant to the provisions of the rules and regulations of the U.S. Commission on Civil Rights (Commission), and the Federal Advisory Committee Act (FACA), that a planning meeting of the New Jersey Advisory Committee to the Commission will convene by conference call, on Friday, January 17, 2020 at 11:30 a.m. (EST). The purpose of the meeting is for the chair to assign members to the criminal forfeiture and

licensing Planning Workgroups and discuss the required tasks. The Planning Workgroups will assist the Committee in planning its collateral consequences civil rights project.

DATES: Friday, January 17, 2020, at 11:30 a.m. (EST).

Public Call-In Information: Conference call number: 1–800–667–5617 and conference call ID number: 7386659.

FOR FURTHER INFORMATION CONTACT: Ivy L. Davis, at *ero@usccr.gov* or by phone at 202–376–7533.

SUPPLEMENTARY INFORMATION: Interested members of the public may listen to the discussion by calling the following toll-free conference call number: 1–800–667–5617 and conference call ID number: 7386659. Please be advised that before placing them into the conference call, the conference call operator may ask callers to provide their names, their organizational affiliations (if any), and email addresses (so that callers may be notified of future meetings). Callers can expect to incur charges for calls they initiate over wireless lines, and the Commission will not refund any incurred charges. Callers will incur no charge for calls they initiate over land-line connections to the toll-free telephone number herein.

Persons with hearing impairments may also follow the discussion by first calling the Federal Relay Service at 1–800–877–8339 and providing the operator with the toll-free conference call number: 1–800–667–5617 and conference call ID number: 7386659.

Members of the public are invited to make statements during the Public Comment section of the meeting or to submit written comments. The comments must be received in the regional office approximately 30 days after each scheduled meeting. Written comments may be mailed to the Eastern Regional Office, U.S. Commission on Civil Rights, 1331 Pennsylvania Avenue, Suite 1150, Washington, DC 20425, or emailed to Evelyn Bohor at *ero@usccr.gov.* Persons who desire additional information may contact the Eastern Regional Office at (202) 376–7533.

Records and documents discussed during the meeting will be available for public viewing, as they become available at: *https://gsageo.force.com/FACA/FACAPublicViewCommitteeDetails?id=a10t0000001gzjVAAQ* click the ''Meeting Details'' and ''Documents'' links. Records generated from this meeting may also be inspected and reproduced at the Eastern Regional Office, as they become available, both before and after the meetings. Persons interested in the work of this advisory committee are advised to go to the Commission's website, *www.usccr.gov,* or to contact the Eastern Regional Office at the above phone number, email or street address.

Agenda: Friday, January 17, 2020 at 11:30 a.m. (EST)

I. Welcome and Roll Call
II. Planning Meeting
—Chair will announce members' assignments to the Planning Workgroups
III. Discuss the Workgroup tasks
IV. Other Business
V. Next Meeting
VI. Public Comments
VII. Adjourn

Exceptional Circumstance: Pursuant to 41 CFR 102–3.150, the notice for this meeting is given less than 15 calendar days prior to the meeting because of the exceptional circumstances of the federal continuing resolution.

Dated: January 8, 2020.

David Mussatt,

Supervisory Chief, Regional Programs Unit.

[FR Doc. 2020–00338 Filed 1–13–20; 8:45 am]

BILLING CODE P

COMMISSION ON CIVIL RIGHTS

Agenda and Notice of Public Meeting of the Delaware Advisory Committee

AGENCY: Commission on Civil Rights.

ACTION: Announcement of meeting.

SUMMARY: Notice is hereby given, pursuant to the provisions of the rules and regulations of the U.S. Commission on Civil Rights (Commission), and the Federal Advisory Committee Act (FACA), that a planning meeting of the Delaware Advisory Committee to the Commission will convene by conference call, on Monday, January 27, 2020 at 4:00 p.m. (EST). The purpose of the meeting is announce the publication of the Committee's civil rights project report on the agency's website. The project examined implicit bias and policing in communities of color in Delaware. Members will also discuss next steps in the publication and promotion of the report.

DATES: Monday, January 27, 2020 at 4:00 p.m. (EST).

Public Call-In Information: Conference call number: 1–866–556–2429 and conference call ID: 4512490.

FOR FURTHER INFORMATION CONTACT: Ivy L. Davis, at *ero@usccr.gov* or by phone at 202–376–7533.

SUPPLEMENTARY INFORMATION: Interested members of the public may listen to the discussion by calling the following toll-free conference call number: 1–866–556–2429 and conference call ID: 4512490. Please be advised that before placing them into the conference call, the conference call operator may ask callers to provide their names, their organizational affiliations (if any), and email addresses (so that callers may be notified of future meetings). Callers can expect to incur charges for calls they initiate over wireless lines, and the Commission will not refund any incurred charges. Callers will incur no charge for calls they initiate over land-line connections to the toll-free telephone number herein.

Persons with hearing impairments may also follow the discussion by first calling the Federal Relay Service at 1–800–877–8339 and providing the operator with the toll-free conference call number: 1–866–556–2429 and conference call ID: 4512490.

Members of the public are invited make statements during the Public Comment section of the meeting or to submit written comments; the written comments must be received in the regional office approximately 30 days after each scheduled meeting. Written comments may be mailed to the Eastern Regional Office, U.S. Commission on Civil Rights, 1331 Pennsylvania Avenue, Suite 1150, Washington, DC 20425 or emailed to Evelyn Bohor at *ero@usccr.gov.* Persons who desire additional information may contact the Eastern Regional Office at (202) 376–7533.

Records and documents discussed during the meeting will be available for public viewing, as they become available at: *https://gsageo.force.com/FACA/FACAPublicViewCommitteeDetails?id=a10t0000001gzlEAAQ,* click the ''Meeting Details'' and ''Documents'' links. Records generated from this meeting may also be inspected and reproduced at the Eastern Regional Office, as they become available, both before and after the meetings. Persons interested in the work of this advisory committee are advised to go to the Commission's website, *www.usccr.gov,* or to contact the Eastern Regional Office at the above phone number, email or street address.

Agenda: Monday, January 27, 2020 at 4:00 p.m. (EST)

I. Welcome and Roll Call
II. Project Planning
—Announce publication of the Committee's civil rights project report
—Discuss next steps in the publication and promotion of the Committee's report

III. Other Business
IV. Public Comments
V. Next Meeting
VI. Adjourn

Dated: January 8, 2020.

David Mussatt,

Supervisory Chief, Regional Programs Unit.

[FR Doc. 2020–00336 Filed 1–13–20; 8:45 am]

BILLING CODE P

DEPARTMENT OF COMMERCE

Foreign-Trade Zones Board

[B–01–2020]

Foreign-Trade Zone (FTZ) 84—Houston, Texas; Notification of Proposed Production Activity; Mitsubishi Caterpillar Forklift America, Inc.; (Forklift/Work Trucks and Related Subassemblies/Kits); Houston, Texas

Mitsubishi Caterpillar Forklift America, Inc. (MCFA) submitted a notification of proposed production activity to the FTZ Board for its facility in Houston, Texas. The notification conforming to the requirements of the regulations of the FTZ Board (15 CFR 400.22) was received on December 20, 2019.

MCFA already has authority to produce forklift trucks within FTZ 84. The current request would add finished products and foreign-status materials/components to the scope of authority. Pursuant to 15 CFR 400.14(b), additional FTZ authority would be limited to the specific foreign-status materials/components and specific finished products described in the submitted notification (as described below) and subsequently authorized by the FTZ Board.

Production under FTZ procedures could exempt MCFA from customs duty payments on the foreign-status materials/components used in export production. On its domestic sales, for the foreign-status materials/components noted below and in the existing scope of authority, MCFA would be able to choose the duty rates during customs entry procedures that apply to the following products: Internal plastic hose assemblies; internal rubber hose assemblies; tire assemblies; rim cushion assemblies; chain assemblies; lift chain assemblies; chain anchor assemblies; mast plate assemblies; automated guided forklift vehicles; backrest assemblies; side shifter assemblies; wire mesh shield assemblies; chain assemblies; pallet clamp assemblies; cab kits; overhead guard kits; carriage assemblies; cooling kits; dash board assemblies; fender assemblies; frame assemblies; frame cover assemblies; fork assemblies; fuel tank assemblies; tank weldment assemblies; handle assemblies; handle holder assemblies; hub assemblies; lift bracket assemblies; load wheel assemblies; mast assemblies; inner mast assemblies; middle mast assemblies; outer mast assemblies; mast bracket assemblies; lift line accumulators; mast brace assemblies; mast cable guide assemblies; mirror kits; mounted lifting eyes used for the purpose of lifting the finished good; front axle subassemblies; rear axle subassemblies; rear support plate assemblies; side plate assemblies; step plate assemblies; seatbelt extension assemblies; seatbelt grip assemblies; cab lanyard kits; pneumatic tire assemblies; trailer hitch assemblies; trolley kits; traction control shift assemblies; travel alarm assemblies; side shifter assemblies; radio data terminals; auxiliary valve assemblies; engine shutdown kits; solenoid valve assemblies; work lights assemblies; electric horn kits; rotary switch kits; angle sensor assemblies; electrical assemblies; cable assemblies; harness assemblies; self-propelled electric work trucks; and, vinyl seat assemblies (duty rates range from free to 3.1%). MCFA would be able to avoid duty on foreign-status components which become scrap/waste. Customs duties also could possibly be deferred or reduced on foreign-status production equipment.

The materials/components sourced from abroad include oil coolers, automated guided forklift vehicles, self-propelled electric work trucks, rubber tire assemblies, lithium ion batteries, and steel mast rails (duty rates range from free to 3.4%). The request indicates that lithium ion batteries will be admitted to the zone in privileged foreign status (19 CFR 146.41), thereby precluding inverted tariff benefits on such items. The request also indicates that certain materials/components are subject to special duties under Section 232 of the Trade Expansion Act of 1962 (Section 232) and/or Section 301 of the Trade Act of 1974 (Section 301), depending on the country of origin. The applicable Section 232 and Section 301 decisions require subject merchandise to be admitted to FTZs in privileged foreign status.

Public comment is invited from interested parties. Submissions shall be addressed to the Board's Executive Secretary and sent to: *ftz@trade.gov.* The closing period for their receipt is February 24, 2020.

A copy of the notification will be available for public inspection in the ''Reading Room'' section of the Board's website, which is accessible via *www.trade.gov/ftz.*

For further information, contact Diane Finver at *Diane.Finver@trade.gov* or (202) 482–1367.

Dated: January 6, 2020.

Andrew McGilvray,

Executive Secretary.

[FR Doc. 2020–00380 Filed 1–13–20; 8:45 am]

BILLING CODE 3510–DS–P

DEPARTMENT OF COMMERCE

Foreign-Trade Zones Board

[S–002–2020]

Foreign-Trade Zone 44—Mt. Olive, New Jersey; Application for Subzone; Fisher Footwear, LLC; Cranbury, New Jersey

An application has been submitted to the Foreign-Trade Zones Board (the Board) by the State of New Jersey Department of State, grantee of FTZ 44, requesting subzone status for the facility of Fisher Footwear, LLC, located in Cranbury, New Jersey. The application was submitted pursuant to the provisions of the Foreign-Trade Zones Act, as amended (19 U.S.C. 81a–81u), and the regulations of the Board (15 CFR part 400). It was formally docketed on January 7, 2020.

The proposed subzone (22 acres) is located at 1248 South River Road, Cranbury, New Jersey. No authorization for production activity has been requested at this time. The proposed subzone would be subject to the existing activation limit of FTZ 44.

In accordance with the Board's regulations, Christopher Kemp of the FTZ Staff is designated examiner to review the application and make recommendations to the Executive Secretary.

Public comment is invited from interested parties. Submissions shall be addressed to the Board's Executive Secretary and sent to: *ftz@trade.gov.* The closing period for their receipt is February 24, 2020. Rebuttal comments in response to material submitted during the foregoing period may be submitted during the subsequent 15-day period to March 9, 2020.

A copy of the application will be available for public inspection in the ''Reading Room'' section of the Board's website, which is accessible via *www.trade.gov/ftz.*

For further information, contact Christopher Kemp at *Christopher.Kemp@trade.gov* or (202) 482–0862.

Dated: January 7, 2020.

Andrew McGilvray,

Executive Secretary.

[FR Doc. 2020–00381 Filed 1–13–20; 8:45 am]

BILLING CODE 3510–DS–P

DEPARTMENT OF COMMERCE

Foreign-Trade Zones Board

[B–59–2019]

Foreign-Trade Zone (FTZ) 43—Battle Creek, Michigan; Authorization of Production Activity; DENSO Manufacturing Michigan, Inc. (Automotive HVAC and Engine Cooling Products); Battle Creek, Michigan

On September 9, 2019, DENSO Manufacturing Michigan, Inc. submitted a notification of proposed production activity to the FTZ Board for its facility within FTZ 43 in Battle Creek, Michigan.

The notification was processed in accordance with the regulations of the FTZ Board (15 CFR part 400), including notice in the **Federal Register** inviting public comment (84 FR 50375, September 25, 2019). On January 7, 2020, the applicant was notified of the FTZ Board's decision that no further review of the activity is warranted at this time. The production activity described in the notification was authorized, subject to the FTZ Act and the FTZ Board's regulations, including Section 400.14.

Dated: January 7, 2020.

Andrew McGilvray,

Executive Secretary.

[FR Doc. 2020–00382 Filed 1–13–20; 8:45 am]

BILLING CODE 3510–DS–P

DEPARTMENT OF COMMERCE

Foreign-Trade Zones Board

[B–56–2019]

Foreign-Trade Zone (FTZ) 281—Miami, Florida; Authorization of Production Activity; South Florida Lumber Company; (Steel Frames); Medley, Florida

On September 9, 2019, Miami-Dade County, grantee of FTZ 281, submitted a notification of proposed production activity to the FTZ Board on behalf of South Florida Lumber Company, within FTZ 281, in Medley, Florida.

The notification was processed in accordance with the regulations of the FTZ Board (15 CFR part 400), including notice in the **Federal Register** inviting public comment (84 FR 49718—49719, September 23, 2019). On January 7, 2020, the applicant was notified of the FTZ Board's decision that no further review of the activity is warranted at this time. The production activity described in the notification was authorized, subject to the FTZ Act and the FTZ Board's regulations, including Section 400.14.

Dated: January 7, 2020.

Andrew McGilvray,

Executive Secretary.

[FR Doc. 2020–00384 Filed 1–13–20; 8:45 am]

BILLING CODE 3510–DS–P

DEPARTMENT OF COMMERCE

International Trade Administration

[A–570–029]

Certain Cold-Rolled Steel Flat Products From the People's Republic of China; Rescission of Antidumping Duty Administrative Review; 2018–2019

AGENCY: Enforcement and Compliance, International Trade Administration, Department of Commerce.

SUMMARY: The Department of Commerce (Commerce) is rescinding the administrative review of the antidumping duty (AD) order on certain cold-rolled steel flat products (cold-rolled steel) from the People's Republic of China (China) for the period of review (POR) July 1, 2018 through June 30, 2019, based on the timely withdrawal of the requests for review.

DATES: Applicable January 14, 2020.

FOR FURTHER INFORMATION CONTACT: Fred Baker, AD/CVD Operations, Office VI, Enforcement and Compliance, International Trade Administration, U.S. Department of Commerce, 1401 Constitution Avenue NW, Washington, DC 20230; telephone: (202) 482–2924.

SUPPLEMENTARY INFORMATION:

Background

On July 1, 2019, Commerce published a notice of opportunity to request an administrative review of the AD order on cold-rolled steel from China for the POR of July 1, 2018 through June 30, 2019.[1] On July 31, 2019, Commerce received a timely filed request from ArcelorMittal USA LLC, California Steel Industries, Inc., Nucor Corporation, Steel Dynamics, Inc., and United States Steel Corporation (the petitioners)[2] for an administrative review of China Steel Sumikin JSC, Dai Thien Loc Corp., Hoa Phat Steel Pipe, Hoa Sen Group, Maruichi Sun Steel Corporation, Nam Kim Steel, NS BlueScope, POSCO Vietnam, Southern Steel Sheet Co., Ton Dong A Corp., Vina One, and VNSteel—Phu My Flat Steel. On July 31, 2019, Commerce also received a request from Mitsui & Co., (U.S.A.) Inc. (Mitsui), for an administrative review of Hoa Sen Group and Ton Dong A Corporation.[3] These requests were in accordance with section 751(a) of the Tariff Act of 1930, as amended (the Act), and 19 CFR 351.213(b). Commerce received no other requests for administrative review.

On September 9, 2019, pursuant to these requests, and in accordance with 19 CFR 351.221(c)(1)(i), Commerce published a notice initiating an administrative review of the antidumping duty order on cold-rolled steel from China.[4] On December 4, 2019, the petitioners withdrew their request for an administrative review of all companies on which they had requested a review.[5] On December 6, 2019, Mitsui withdrew its request for an administrative review of the two companies on which they had requested a review.[6]

Rescission of Review

Pursuant to 19 CFR 351.213(d)(1), Commerce will rescind an administrative review, in whole or in part, if a party that requested a review withdraws the request within 90 days of the publication date of the notice of initiation of the requested review. The petitioners and Mitsui withdrew their requests within 90 days of the publication date of the notice of initiation. No other parties requested an administrative review of the order. Therefore, in accordance with 19 CFR 351.213(d)(1), we are rescinding this review in its entirety.

Assessment

Commerce intends to instruct U.S. Customs and Border Protection (CBP) to assess antidumping duties on all

[1] *See Antidumping or Countervailing Duty Order, Finding, or Suspended Investigation; Opportunity to Request Administrative Review,* 84 FR 31295 (July 1, 2019).

[2] *See* Petitioners' Letter, ''Cold-Rolled Steel Flat Products from the People's Republic of China: Request for Administrative Review of Antidumping Duty Order,'' dated July 31, 2019.

[3] *See* Mitsui Letter, ''Certain Cold-Rolled Steel Flat Products from China: Request for Administrative Review,'' dated July 31, 2019.

[4] *See Initiation of Antidumping and Countervailing Duty Administrative Reviews,* 84 FR 47242 (September 9, 2019).

[5] *See* Petitioners' Letter, ''Certain Cold-Rolled Steel Flat Products from the People's Republic of China: Withdrawal of Request for Administrative Review of Antidumping Duty Order,'' dated December 4, 2019.

[6] *See* Mitsui's Letter, ''Certain Cold-Rolled Steel Flat Products from the People's Republic of China; Withdrawal of Request of Antidumping Duty Order,'' dated December 6, 2019.

appropriate entries of cold-rolled steel from China. Antidumping duties shall be assessed at rates equal to the cash deposit of estimated antidumping duties required at the time of entry, or withdrawal from warehouse, for consumption in accordance with 19 CFR 351.212(c)(1)(i). Commerce intends to issue appropriate assessment instructions to CBP 15 days after the date of publication of this notice in the **Federal Register**.

Notification to Importers

This notice serves as the only reminder to importers of their responsibility, under 19 CFR 351.402(f)(2), to file a certificate regarding the reimbursement of antidumping duties prior to liquidation of the relevant entries during this review period. Failure to comply with this requirement may result in the presumption that reimbursement of antidumping duties occurred and the subsequent assessment of double antidumping duties.

Notification Regarding Administrative Protective Orders

This notice also serves as a reminder to all parties subject to administrative protective order (APO) of their responsibility concerning the disposition of proprietary information disclosed under APO in accordance with 19 CFR 351.305, which continues to govern business proprietary information. Timely written notification of the return/destruction of APO materials or conversion to judicial protective order is hereby requested. Failure to comply with the regulations and terms of an APO is a violation which is subject to sanction.

This notice is issued and published in accordance with sections 751(a)(1) and 777(i)(1) of the Act, and 19 CFR 351.213(d)(4).

Dated: January 8, 2020.

James Maeder,

Deputy Assistant Secretary for Antidumping and Countervailing Duty Operations.

[FR Doc. 2020–00414 Filed 1–13–20; 8:45 am]

BILLING CODE 3510–DS–P

DEPARTMENT OF COMMERCE

International Trade Administration

Renewable Energy and Energy Efficiency Advisory Committee

AGENCY: International Trade Administration, U.S. Department of Commerce.

ACTION: Notice of an open meeting.

SUMMARY: The Renewable Energy and Energy Efficiency Advisory Committee (REEEAC or the Committee) will hold a meeting on Thursday, February 6, 2020, at the U.S. Department of Commerce Herbert C. Hoover Building in Washington, DC. The meeting is open to the public with registration instructions provided below.

DATES: February 6, 2020, from approximately 9 a.m. to 5 p.m. Eastern Standard Time (EST). Members of the public wishing to participate must register in advance with Victoria Gunderson at the contact information below by 5 p.m. (EST) on Thursday, January 30, 2020, in order to pre-register, including any requests to make comments during the meeting or for accommodations or auxiliary aids.

ADDRESSES: To register, please contact Victoria Gunderson, Designated Federal Officer, Office of Energy and Environmental Industries (OEEI), Industry and Analysis, International Trade Administration, U.S. Department of Commerce at (202) 482–7890; email: *Victoria.Gunderson@trade.gov.*

FOR FURTHER INFORMATION CONTACT: Victoria Gunderson, Designated Federal Officer, Office of Energy and Environmental Industries (OEEI), Industry and Analysis, International Trade Administration, U.S. Department of Commerce at (202) 482–7890; email: *Victoria.Gunderson@trade.gov.*

SUPPLEMENTARY INFORMATION:

Background: The Secretary of Commerce established the REEEAC pursuant to discretionary authority and in accordance with the Federal Advisory Committee Act, as amended (5 U.S.C. App.), on July 14, 2010. The REEEAC was re-chartered most recently on June 7, 2018. The REEEAC provides the Secretary of Commerce with advice from the private sector on the development and administration of programs and policies to expand the export competitiveness of U.S. renewable energy and energy efficiency products and services. More information regarding the REEEAC is available online at *http://export.gov/reee/reeeac.*

On February 6, 2020, the REEEAC will hold the sixth in-person meeting of its current charter term. The Committee, with officials from the Department of Commerce and other agencies, will discuss major issues affecting the competitiveness of the U.S. renewable energy and energy efficiency industries, hold subcommittee work sessions to discuss draft recommendations, and consider recommendations for approval. An agenda will be made available by January 30, 2020 upon request to Victoria Gunderson.

The meeting will be open to the public and will be accessible to people with disabilities. All guests are required to register in advance by the deadline identified under the **DATE** caption. Requests for auxiliary aids must be submitted by the registration deadline. Last minute requests will be accepted but may not be possible to fill.

A limited amount of time before the close of the meeting will be available for oral comments from members of the public attending the meeting. To accommodate as many speakers as possible, the time for public comments will be limited to two to five minutes per person (depending on number of public participants). Individuals wishing to reserve speaking time during the meeting must contact Victoria Gunderson and submit a brief statement of the general nature of the comments, as well as the name and address of the proposed participant, by 5 p.m. EST on Thursday, January 30, 2020. If the number of registrants requesting to make statements is greater than can be reasonably accommodated during the meeting, the International Trade Administration may conduct a lottery to determine the speakers. Speakers are requested to submit a copy of their oral comments by email to Victoria Gunderson for distribution to the participants in advance of the meeting.

Any member of the public may submit written comments concerning the REEEAC's affairs at any time before or after the meeting. Comments may be submitted to the Renewable Energy and Energy Efficiency Advisory Committee, c/o: Victoria Gunderson, Designated Federal Officer, Office of Energy and Environmental Industries, U.S. Department of Commerce; 1401 Constitution Avenue NW; Mail Stop: 28018; Washington, DC 20230. To be considered during the meeting, public comments must be transmitted to the REEEAC prior to the meeting. As such, written comments must be received no later than 5 p.m. EST on Thursday, January 30, 2020. Comments received after that date will be distributed to the members but may not be considered at the meeting.

Copies of REEEAC meeting minutes will be available within 30 days following the meeting.

Dated: January 9, 2020.

Man Cho,

Deputy Director, Office of Energy and Environmental Industries.

[FR Doc. 2020–00417 Filed 1–13–20; 8:45 am]

BILLING CODE 3510–DR–P

DEPARTMENT OF COMMERCE

National Oceanic and Atmospheric Administration

[RTID 0648–XA010]

South Atlantic Fishery Management Council; Public Hearings

AGENCY: National Marine Fisheries Service (NMFS), National Oceanic and Atmospheric Administration (NOAA), Commerce.

ACTION: Notice of public hearings.

SUMMARY: The South Atlantic Fishery Management Council (Council) will hold public hearings pertaining to Amendment 11 to the Shrimp Fishery Management Plan for the South Atlantic Region. The amendment addresses transit provisions for the shrimp fishery.

DATES: The public hearings will be held via webinar February 5 and 6, 2020.

ADDRESSES: *Council address:* South Atlantic Fishery Management Council, 4055 Faber Place Drive, Suite 201, N Charleston, SC 29405.

FOR FURTHER INFORMATION CONTACT: Kim Iverson, Public Information Officer, SAFMC; phone: (843) 571–4366 or toll free (866) SAFMC–10; fax: (843) 769–4520; email: *kim.iverson@safmc.net.*

SUPPLEMENTARY INFORMATION:

The public hearings will be conducted via webinar and begin at 6 p.m. Registration for the webinars is required. Registration information will be posted on the Council's website at *https://safmc.net/safmc-meetings/public-hearings-scoping-meetings/* as it becomes available.

Amendment 11 to the Shrimp Fishery Management Plan

The draft amendment addresses transit provisions for shrimp vessels through federal waters that are closed to shrimp harvest due to cold water.

During the public hearings, Council staff will present an overview of the amendment via webinar and answer clarifying questions relevant to the proposed actions. Members of the public will have an opportunity to go on record to record their comments for consideration by the Council.

Special Accommodations

These meetings are physically accessible to people with disabilities. Requests for auxiliary aids should be directed to the Council office (see **ADDRESSES**) 5 days prior to the public hearings.

Note: The times and sequence specified in this agenda are subject to change.

Authority: 16 U.S.C. 1801 *et seq.*

Dated: January 9, 2020.

Tracey L. Thompson,

Acting Deputy Director, Office of Sustainable Fisheries, National Marine Fisheries Service.

[FR Doc. 2020–00396 Filed 1–13–20; 8:45 am]

BILLING CODE 3510–22–P

DEPARTMENT OF COMMERCE

National Oceanic and Atmospheric Administration

[RTID 0648–XA009]

Mid-Atlantic Fishery Management Council (MAFMC); Public Meetings

AGENCY: National Marine Fisheries Service (NMFS), National Oceanic and Atmospheric Administration (NOAA), Commerce.

ACTION: Notice of initiation of scoping process; notice of public scoping meetings; request for comments.

SUMMARY: The Mid-Atlantic Fishery Management Council (Council), jointly with the Atlantic States Marine Fisheries Commission (Commission) will hold 11 public scoping meetings and a written comment period to solicit public comments on potential topics to be addressed by a Commercial/Recreational Allocation Amendment to the Summer Flounder, Scup, and Black Sea Bass Fishery Management Plan (FMP).

DATES: Written public comments must be received on or before 11:59 p.m. EST, March 17, 2020. The meetings will be held between February 13, 2020 and March 3, 2020. For specific dates and times, see **SUPPLEMENTARY INFORMATION.**

ADDRESSES: The scoping document is accessible electronically at: *http://www.mafmc.org/s/SFSBSB_allocation_scoping_PID_Jan2020_final.pdf* or by request to Dr. Chris Moore, Executive Director, Mid-Atlantic Fishery Management Council, 800 N State Street, Suite 201, Dover, DE 19901; telephone: (302) 674–2331.

Meeting addresses: The public hearings will be held in Buzzards Bay, MA; Narragansett, RI; Old Lyme, CT; Stony Brook, NY; Belmar, NJ; Galloway, NJ; Dover, DE; Berlin, MD; Fort Monroe, VA; and Washington, NC. One additional hearing will be held by internet webinar. For specific dates and locations, see **SUPPLEMENTARY INFORMATION.**

Public comments: Written comments may be sent by any of the following methods:

- *Email to: jbeaty@mafmc.org;* Include ''Fluke/Scup/Sea Bass Allocation Amendment'' in the subject line.
- *Via webform at: http://www.mafmc.org/comments/sfsbsb-allocation-amendment.*
- *Mail to:* Dr. Christopher M. Moore, Executive Director, Mid-Atlantic Fishery Management Council, 800 N State Street, Suite 201, Dover, DE 19901. Mark the outside of the envelope ''Fluke/Scup/Sea Bass Allocation Amendment.''
- *Fax to:* (302) 674–5399.

FOR FURTHER INFORMATION CONTACT: Christopher M. Moore, Ph.D., Executive Director, Mid-Atlantic Fishery Management Council, telephone: (302) 526–5255.

SUPPLEMENTARY INFORMATION: The Mid-Atlantic Fishery Management Council and the Atlantic States Marine Fisheries Commission have initiated an amendment to the Summer Flounder, Scup, and Black Sea Bass FMP, known as the ''Summer Flounder, Scup, and Black Sea Bass Commercial/Recreational Allocation Amendment.'' This amendment will consider potential modifications to the allocations of catch or landings between the commercial and recreational sectors for summer flounder, scup, and black sea bass. The commercial and recreational allocations for all three species were set in the mid-1990s based on historical proportions of landings (for summer flounder and black sea bass) or catch (for scup) from each sector. In July 2018, the Marine Recreational Information Program released revisions to its time series of catch (harvest and discards) estimates. These revisions resulted in much higher recreational catch estimates compared to previous estimates, affecting the entire time series of data going back to 1981. Some changes have also been made to commercial catch data since the allocations were established. The current commercial and recreational allocation percentages for all three species do not reflect the current understanding of the recent and historic proportions of catch and landings from the two sectors. This amendment will consider whether changes to these allocations are warranted.

Additional information and amendment documents are available at: *http://www.mafmc.org/actions/sfsbsb-allocation-amendment.*

The Council and Commission will hold 11 public scoping hearings on this amendment, during which Council or Commission staff will brief the public on the contents of the amendment documents and alternatives under consideration, prior to opening the hearing for public comments. Scoping is

the first and best opportunity to raise concerns related to the scope of issues that will be considered. The hearings may not run the full length of time stated below, depending on attendance.

The hearings schedule is as follows:

1. *Thursday, February 13, 2020 from 6 p.m. to 7:30 p.m.:* Massachusetts Maritime Academy, Admiral's Hall, 101 Academy Drive, Buzzards Bay, MA 02532.

2. *Wednesday, February 19, 2020 from 6 p.m. to 7 p.m.:* Delaware Dept. of Natural Resources & Environmental Control Auditorium, Richardson & Robbins Building, 89 Kings Highway, Dover, DE 19901.

3. *Monday, February 24, 2020 from 6 p.m. to 8 p.m.:* Belmar Municipal Court Room, 601 Main Street, Belmar, NJ 07719.

4. *Tuesday, February 25, 2020 from 3:30 p.m. to 4:45 p.m.:* Berlin Library, 13 Harrison Avenue, Berlin, MD 21811.

5. *Tuesday, February 25, 2020 from 6 p.m. to 8 p.m.:* Galloway Township Branch Library, 306 East Jimmie Leeds Road, Galloway, NJ 08205.

6. *Tuesday, February 25, 2020 from 6 p.m. to 8 p.m.:* North Carolina Division of Marine Fisheries Pamlico District Office, 943 Washington Square Mall, US Highway 17, Washington, NC 27889.

7. *Wednesday, February 26, 2020 from 6 p.m. to 7:30 p.m.:* University of Rhode Island Bay Campus, Corless Auditorium, South Ferry Road, Narragansett, RI 02882.

8. *Wednesday, February 26, 2020 from 7 p.m. to 8 p.m.:* Connecticut Department of Energy and Environmental Protection Marine Headquarters Boating Education Center (Rear Building), 333 Ferry Road, Old Lyme, CT 06371.

9. *Thursday, February 27, 2020 from 6 p.m. to 7:30 p.m.:* Stony Brook University, School of Marine and Atmospheric Sciences (SOMAS), Room 120, Endeavor Hall; Stony Brook, NY 11794.

10. *Monday, March 2, 2020 from 5 p.m. to 6 p.m.:* Virginia Marine Resources Commission, 380 Fenwick Road, Building 96, Fort Monroe, VA 23651.

11. *Tuesday, March 3, 2020 from 6 p.m. to 7:30 p.m.:* internet webinar accessible at *http://mafmc.adobeconnect.com/sfsbsb_com_rec_allocation_scoping/.* Audio is available by dialing 1–800–832–0736 and entering room number 5068871.

Special Accommodations

These meetings are physically accessible to people with disabilities. Requests for sign language interpretation or other auxiliary aids should be directed to M. Jan Saunders at the Mid-Atlantic Council Office, (302) 526–5251, at least 5 days prior to the meeting date.

Authority: 16 U.S.C. 1801 *et seq.*

Dated: January 9, 2020.

Tracey L. Thompson,

Acting Deputy Director, Office of Sustainable Fisheries, National Marine Fisheries Service.

[FR Doc. 2020–00398 Filed 1–13–20; 8:45 am]

BILLING CODE 3510–22–P

DEPARTMENT OF DEFENSE

Defense Acquisition Regulations System

Early Engagement Opportunity: Implementation of National Defense Authorization Act for Fiscal Year 2020

AGENCY: Department of Defense (DoD).

ACTION: Notice.

SUMMARY: DoD announces an early engagement opportunity regarding implementation of the National Defense Authorization Act for Fiscal Year 2020 within the acquisition regulations.

DATES: Early inputs should be submitted in writing via the Defense Acquisition Regulations System (DARS) website shown below. The website will be updated when early inputs will no longer be accepted.

ADDRESSES: Submit early inputs via the DARS website at *https://www.acq.osd.mil/dpap/dars/early_engagement.html.*

FOR FURTHER INFORMATION CONTACT: Send inquiries via email to *osd.dfars@mail.mil* and reference ''Early Engagement Opportunity: Implementation of NDAA for FY 2020'' in the subject line.

SUPPLEMENTARY INFORMATION: DoD is providing an opportunity for the public to provide early inputs on implementation of the National Defense Authorization Act (NDAA) for Fiscal Year (FY) 2020 within the acquisition regulations. The public is invited to submit early inputs on sections of the NDAA for FY 2020 via the DARS website at *https://www.acq.osd.mil/dpap/dars/early_engagement.html.* The website will be updated when early inputs will no longer be accepted. Please note, this venue does not replace or circumvent the rulemaking process; DARS will engage in formal rulemaking, in accordance with 41 U.S.C. 1707, when it has been determined that rulemaking is required to implement a section of the NDAA for FY 2020 within the acquisition regulations.

Jennifer Lee Hawes,

Regulatory Control Officer, Defense Acquisition Regulations System.

[FR Doc. 2020–00428 Filed 1–13–20; 8:45 am]

BILLING CODE 5001–06–P

DEPARTMENT OF DEFENSE

Office of the Secretary

[Docket ID: DoD–2020–OS–0001]

Privacy Act of 1974; System of Records

AGENCY: Office of the Under Secretary of Defense (Comptroller) (OUSD(C)), Department of Defense (DoD).

ACTION: Notice of a modified System of Records.

SUMMARY: The OUSD(C) is modifying an existing System of Records titled, ''Forms and Account Management Service (FAMS),'' DCFO 01. FAMS will be the sole, web-based platform for the appointment and termination of Department Accountable Officials, appointment and termination of Key Signatories of financial documentation, and access management to a portfolio of information systems. During Financial Improvement and Audit Readiness (FIAR) audits of Department of Defense (DoD) Information Technology (IT) processes, numerous notices of findings and recommendations were issued related to vulnerabilities in managing Defense systems account access and appointment of accountable official positions. Findings identified gaps in properly handling and managing accounts for access and authority to act. Improper account management presents information security risks that could result in unauthorized access. Historically, many of these functions were performed in a decentralized manner and conducted manually without effective checks and balances on accuracy. Introduction of the new web-based platform will reduce and eliminate the use of paper forms as it will automate the request and approval processes and enable periodic validation and reconciliation of account records against actual account permissions.

DATES: This notice is effective upon publication; however, comments on the Routine Uses will be accepted on or before February 13, 2020. The Routine Uses are effective at the close of the comment period.

ADDRESSES: You may submit comments, identified by docket number and title, by any of the following methods:

• *Federal Rulemaking Portal: https://www.regulations.gov.*

Follow the instructions for submitting comments.

• *Mail:* Department of Defense, Office of the Chief Management Officer, Directorate for Oversight and Compliance, 4800 Mark Center Drive, Mailbox #24, Suite 08D09, Alexandria, VA 22350–1700.

Instructions: All submissions received must include the agency name and docket number for this **Federal Register** document. The general policy for comments and other submissions from members of the public is to make these submissions available for public viewing on the internet at *https://www.regulations.gov* as they are received without change, including any personal identifiers or contact information.

FOR FURTHER INFORMATION CONTACT: Ms. Cynthia B. Stanley, Department of Defense, Office of the Chief Management Officer, Directorate for Oversight and Compliance, 4800 Mark Center Drive, Mailbox #24, Suite 08D09, Alexandria, VA 22350–1700, or by phone at (703) 571–0070.

SUPPLEMENTARY INFORMATION: Office of Management and Budget (OMB) Circular No. A–123 defines management's responsibility for internal control in Federal agencies. A re-examination of the existing internal control requirements for Federal agencies was initiated in light of the new internal control requirements for publicly-traded companies contained in the Sarbanes-Oxley Act of 2002. Circular A–123 and the statute it implements, the Federal Managers' Financial Integrity Act of 1982, are at the center of the existing Federal requirements to improve internal control.

This circular reflects policy recommendations developed by a joint committee of representatives from the Chief Financial Officer Council (CFOC) and the President's Council on Integrity and Efficiency. The policy changes in this circular are intended to strengthen the requirements for conducting management's assessment of internal control over financial reporting. OUSD(C) is responsible for developing and maintaining effective internal controls for the DoD to provide assurance significant weaknesses in the design or operation of internal control, such as unauthorized access to Defense business systems, which could adversely affect the Department's ability to meet its objectives, are prevented or detected in a timely manner. FAMS enables the DoD to track and manage the appointment of qualified personnel (Departmental Accountable Officials and Financial Signatories) to key positions and control Defense business system access to appropriately cleared and authenticated employees, thereby meeting the requirements of OMB A–123.

The OSD notices for Systems of Records subject to the Privacy Act of 1974 (5 U.S.C. 552a), as amended, have been published in the **Federal Register** and are available from the address provided in the **FOR FURTHER INFORMATION CONTACT** paragraph or are available via the Defense Privacy, Civil Liberties, and Transparency Division website at *https://dpcld.defense.gov.*

The proposed systems reports, as required by the Privacy Act, as amended, were submitted on November 26, 2019 to the House Committee on Oversight and Reform, the Senate Committee on Homeland Security and Governmental Affairs, and the OMB pursuant to Section 6 of OMB Circular No. A–108, ''Federal Agency Responsibilities for Review, Reporting, and Publication under the Privacy Act,'' revised December 23, 2016 (December 23, 2016, 81 FR 94424).

Dated: January 8, 2020.

Aaron T. Siegel,

Alternate OSD Federal Register Liaison Officer, Department of Defense.

SYSTEM NAME AND NUMBER:

Forms and Account Management Service (FAMS), DCFO–01.

SECURITY CLASSIFICATION:

Unclassified.

SYSTEM LOCATION:

Air Force Life Cycle Management Center, 9 Eglin Street, Building 1606, Hanscom Air Force Base, MA 01731.

SYSTEM MANAGER(S):

Program Manager, OUSD(C), 1500 West Perimeter Road, Suite 3130, Joint Base Andrews NAF, MD 20762–6604, telephone contact numbers: (240) 612–5307, (202) 320–2372, and (240) 612–5199.

AUTHORITY FOR MAINTENANCE OF THE SYSTEM:

31 U.S.C. 902, Authority and Functions of Agency Chief Financial Officers, as amended; 31 U.S.C. 3325, Vouchers; 31 U.S.C. 3528, Responsibilities and Relief from Liability of Certifying Officials; Chief Financial Officers Act of 1990, 31 U.S.C., chapters 5, 9, 11, and 35; also 5 U.S.C. 5313–5315, 38 U.S.C. 201 and 42 U.S.C. 3533; Government Management Reform Act of 1994, Public Law 103–356; Federal Financial Management Improvement Act of 1996, Public Law 104–208, Title VIII; 44 U.S.C. 3541, Federal Information Security Modernization Act of 2014; Executive Order 10450, Security Requirements for Government Employment; DoD Financial Management Regulation 7000.14–R, Vol. 5.

PURPOSE(S) OF THE SYSTEM:

FAMS is a secure, cloud-based set of tools and services established to automate key Financial Management Forms, workflow, and reporting processes (audit materials). FAMS optimizes the use of information technology and streamlines the financial management processes by eliminating paper form routing and physical storage requirements and closing the associated access control audit finding performance gaps. The data acquired and updated from each record source is used not only for identity validation, but is also stored and revalidated for subsequent workflow actions.

CATEGORIES OF INDIVIDUALS COVERED BY THE SYSTEM:

Within the DoD: Active Duty service members, Reserve service members, National Guard Bureau service members, Presidential Appointees, Civilians, Military Academy Cadets, and Contractors. Also includes Foreign Military Members and Foreign Civilian hire employees.

CATEGORIES OF RECORDS IN THE SYSTEM:

Name, Electronic Data Interchange Personal Identifier Number (EDIPI), also referred to as the DoD ID number, current rank/grade, current organization, current duty location, security clearance level, security clearance completion date, Active/Reserve/Guard designation, specialty codes used by the military branches to identify a specific job, hire date, hire location, separation/retirement date, and date of death.

RECORD SOURCE CATEGORIES:

Individuals; DoD databases accessed through Defense Manpower Data Center (DMDC) Identity Web Services—Personal Identity Data and DMDC Information System for Security—Personal Security Clearance Data.

ROUTINE USES OF RECORDS MAINTAINED IN THE SYSTEM, INCLUDING CATEGORIES OF USERS AND PURPOSES OF SUCH USES:

In addition to those disclosures generally permitted under 5 U.S.C. 552a(b) of the Privacy Act of 1974, as amended, these records contained therein may specifically be disclosed outside the DoD as a routine use pursuant to 5 U.S.C. 552a(b)(3) as follows:

a. To contractors, grantees, experts, consultants, students, and others performing or working on a contract, service, grant, cooperative agreement, or other assignment for the Federal Government when necessary to accomplish an agency function related to this System of Records.

b. To the appropriate Federal, State, local, territorial, tribal, foreign, or international law enforcement authority or other appropriate entity where a record, either alone or in conjunction with other information, indicates a violation or potential violation of law, whether criminal, civil, or regulatory in nature.

c. To any component of the Department of Justice for the purpose of representing the DoD, or its components, officers, employees, or members in pending or potential litigation to which the record is pertinent.

d. In an appropriate proceeding before a court, grand jury, or administrative or adjudicative body or official, when the DoD or other Agency representing the DoD determines that the records are relevant and necessary to the proceeding; or in an appropriate proceeding before an administrative or adjudicative body when the adjudicator determines the records to be relevant to the proceeding.

e. To the National Archives and Records Administration for the purpose of records management inspections conducted. This routine use complies with 44 U.S.C. 2904 and 2906.

f. To a Member of Congress or staff acting upon the Member's behalf when the Member or staff requests the information on behalf of, and at the request of, the individual who is the subject of the record.

g. To appropriate agencies, entities, and persons when (1) The DoD suspects or has confirmed that the security or confidentiality of the information in the System of Records has been compromised; (2) the DoD has determined that as a result of the suspected or confirmed breach there is a risk of harm to individuals, the DoD (including its information systems, programs, and operations), the Federal Government, or national security; and (3) the disclosure made to such agencies, entities, and persons is reasonably necessary to assist in connection with the DoD's efforts to respond to the suspected or confirmed breach or to prevent, minimize, or remedy such harm.

h. To another Federal agency or Federal entity, when the DoD determines that information from this System of Records is reasonably necessary to assist the recipient agency or entity in (1) responding to a suspected or confirmed breach or (2) preventing, minimizing, or remedying the risk of harm to individuals, the recipient agency or entity (including its information systems, programs and operations), the Federal Government, or national security, resulting from a suspected or confirmed breach.

POLICIES AND PRACTICES FOR STORAGE OF RECORDS:

Records are stored on electronic media.

POLICIES AND PRACTICES FOR RETRIEVAL OF RECORDS:

Individual's full name and EDIPI/DoD ID number.

POLICIES AND PRACTICES FOR RETENTION AND DISPOSAL OF RECORDS:

Destroy 10 years after cancellation or revocation of the order, provided there are no outstanding discrepancies for which corrective action has been prescribed.

ADMINISTRATIVE, TECHNICAL, AND PHYSICAL SAFEGUARDS:

Role-based access control restricts the system access to authorized users with a need-to-know. Network encryption protects data transmitted over the network while disk encryption secures the disks storing data. Key management services safeguards encryption keys.

RECORD ACCESS PROCEDURES:

Individuals seeking to determine whether this System of Records contains information on themselves should address written inquiries to the Director, Chief Financial Officer—Data Transformation Office, OUSD–C/DCFO/CDTO, 1100 Defense Pentagon, Washington DC 20301–1100, (703) 571–1396. For verification purposes, individuals should provide their full name, EDIPI/DoD ID number from their Common Access Card (CAC), office or organization where currently assigned, if applicable, and current address and telephone number. In addition, the requester must provide either a notarized statement or an unsworn declaration made in accordance with 28 U.S.C. 1746, in the following format:

If executed outside the United States: ''I declare (or certify, verify, or state) under penalty of perjury under the laws of the United States of America that the foregoing is true and correct. Executed on (date). (Signature).''

If executed within the United States, its territories, possessions, or commonwealths: ''I declare (or certify, verify, or state) under penalty of perjury that the foregoing is true and correct. Executed on (date). (Signature).''

CONTESTING RECORD PROCEDURES:

The DoD rule for accessing, contesting and appealing agency determinations by the individual concerned are published in 32 CFR part 310, or may be obtained from the system manager.

NOTIFICATION PROCEDURES:

Individuals seeking to determine whether information about themselves is contained in this system should address written inquiries to the Director, Chief Financial Officer—Data Transformation Office, OUSD–C/DCFO/CDTO, 1100 Defense Pentagon, Washington DC 20301–1100. For verification purposes, individuals should provide full name, EDIPI/DoD ID number from CAC, office or organization where currently assigned, if applicable, and current address and telephone number. In addition, the requester must provide either a notarized statement or an unsworn declaration made in accordance with 28 U.S.C. 1746, in the following format:

If executed outside the United States: ''I declare (or certify, verify, or state) under penalty of perjury under the laws of the United States of America that the foregoing is true and correct. Executed on (date). (Signature).''

If executed within the United States, its territories, possessions, or commonwealths: ''I declare (or certify, verify, or state) under penalty of perjury that the foregoing is true and correct. Executed on (date). (Signature).''

EXEMPTIONS PROMULGATED FOR THE SYSTEM:

None.

HISTORY:

October 9, 2019, 84 FR 54125.

[FR Doc. 2020–00365 Filed 1–13–20; 8:45 am]

BILLING CODE 5001–06–P

DEPARTMENT OF DEFENSE

Office of the Secretary

Defense Health Board; Notice of Federal Advisory Committee Meeting

AGENCY: Under Secretary of Defense for Personnel and Readiness, Department of Defense (DoD).

ACTION: Notice of Federal Advisory Committee meeting.

SUMMARY: The DoD is publishing this notice to announce that the following Federal Advisory Committee meeting of the Defense Health Board (DHB) has been scheduled.

DATES: Open to the public Monday, February 10, 2020 from 9 a.m. to 5 p.m.

ADDRESSES: Gatehouse, 8111 Gatehouse Road, Rooms 345 and 346, Falls Church, Virginia 22042. Registration is required. (Pre-meeting screening for building access and registration required. See guidance in **SUPPLEMENTARY INFORMATION**, ''Meeting Accessibility.'')

FOR FURTHER INFORMATION CONTACT: Captain Gregory Gorman, Medical Corps, U.S. Navy, (703) 275–6060 (Voice), (703) 275–6064 (Facsimile), *gregory.h.gorman.mil@mail.mil* (Email). Mailing address is 7700 Arlington Boulevard, Suite 5101, Falls Church, Virginia 22042. Website: *http://www.health.mil/dhb*. The most up-to-date changes to the meeting agenda can be found on the website.

SUPPLEMENTARY INFORMATION: This meeting is being held under the provisions of the Federal Advisory Committee Act (FACA) (5 U.S.C., Appendix), the Government in the Sunshine Act (5 U.S.C. 552b), and 41 CFR 102–3.140 and 102–3.150.

Availability of Materials for the Meeting: Additional information, including the agenda, is available at the DHB website, *http://www.health.mil/dhb*. A copy of the agenda or any updates to the agenda for the February 10, 2020, meeting will be available on the DHB website. Any other materials presented in the meeting may be obtained at the meeting.

Purpose of the Meeting: The DHB provides independent advice and recommendations to maximize the safety and quality of, as well as access to, health care for DoD health care beneficiaries. The purpose of the meeting is to provide progress updates on specific taskings before the DHB. In addition, the DHB will receive information briefings on current issues related to military medicine.

Agenda: The DHB anticipates receiving a briefing on the Department of Defense Total Force Fitness initiative, briefings from Foreign Service Medical Liaisons regarding best practices in their countries for mental health and women's health, and a briefing on the Military Health System Transformation. The DHB also expects to receive progress updates from the Neurological/Behavioral Health Subcommittee on the Examination of Mental Health Accession Screening: Predictive Value of Current Measures and Processes review, the Health Care Delivery Subcommittee on the Active Duty Women's Health Care Services review, and the Public Health Subcommittee on the Measles, Mumps, and Rubella Booster Immunization Practices review. Any changes to the agenda can be found at the link provided in the **SUPPLEMENTARY INFORMATION** section.

Meeting Accessibility: Pursuant to 5 U.S.C. 552b and 41 CFR 102–3.140 through 102–3.165 and subject to availability of space, this meeting is open to the public from 9:00 a.m. to 5:00 p.m. on February 10, 2020. Seating is limited and is on a first-come basis. All members of the public who wish to attend the public meeting must register by emailing their name, rank/title, and organization/company to *dha.ncr.dhb.mbx.defense-health-board@mail.mil* or by contacting Dr. Clarice Waters at (703) 275–6003 no later than Wednesday, February 5, 2020. Members of the public who do not have access to the Gatehouse building will be required to provide additional information before access to Gatehouse can be arranged by DHB staff and, when required, this information must be provided to the DHB Designated Federal Officer (DFO), Captain Gorman at *gregory.h.gorman.mil@mail.mil* (Email) or (703) 275–6060 (Voice).

Special Accommodations: Individuals requiring special accommodations to access the public meeting should contact Dr. Clarice Waters at least five (5) business days prior to the meeting so that appropriate arrangements can be made.

Written Statements: Any member of the public wishing to provide comments to the DHB related to its current taskings or mission may do so at any time in accordance with section 10(a)(3) of the Federal Advisory Committee Act, 41 CFR 102–3.105(j) and 102–3.140, and the procedures described in this notice. Written statements may be submitted to the DHB DFO, Captain Gorman, at *gregory.h.gorman.mil@mail.mil.* Supporting documentation may also be included, to establish the appropriate historical context and to provide any necessary background information. If the written statement is not received at least five (5) business days prior to the meeting, the DFO may choose to postpone consideration of the statement until the next open meeting. The DFO will review all timely submissions with the DHB President and ensure they are provided to members of the DHB before the meeting that is subject to this notice. After reviewing the written comments, the President and the DFO may choose to invite the submitter to orally present their issue during an open portion of this meeting or at a future meeting. The DFO, in consultation with the DHB President, may allot time for members of the public to present their issues for review and discussion by the DHB.

Dated: January 9, 2020.

Aaron T. Siegel,

Alternate OSD Federal Register Liaison Officer, Department of Defense.

[FR Doc. 2020–00438 Filed 1–13–20; 8:45 am]

BILLING CODE 5001–06–P

DEPARTMENT OF EDUCATION

Applications for New Awards; Undergraduate International Studies and Foreign Language Program

AGENCY: Office of Postsecondary Education, Department of Education.

ACTION: Notice.

SUMMARY: The Department of Education is issuing a notice inviting applications for fiscal year (FY) 2020 for the Undergraduate International Studies and Foreign Language (UISFL) program, Catalog of Federal Domestic Assistance (CFDA) number 84.016A. This notice relates to the approved information collection under OMB control number 1840–0796.

DATES:

Applications Available: January 14, 2020.

Deadline for Transmittal of Applications: March 24, 2020.

Pre-Application Webinar Information: The Department will hold a pre-application meeting via webinar for prospective applicants. Detailed information regarding this webinar will be provided on the website for the UISFL program at *www2.ed.gov/programs/iegpsugisf/index.html*.

ADDRESSES: For the addresses for obtaining and submitting an application, please refer to our Common Instructions for Applicants to Department of Education Discretionary Grant Programs, published in the **Federal Register** on February 13, 2019 (84 FR 3768), and available at *www.govinfo.gov/content/pkg/FR-2019-02-13/pdf/2019-02206.pdf*.

FOR FURTHER INFORMATION CONTACT: Tanyelle H. Richardson, U.S. Department of Education, 400 Maryland Avenue SW, Room 258–14, Washington, DC 20202. Telephone: (202) 453–6391. Email: *tanyelle.richardson@ed.gov*.

If you use a telecommunications device for the deaf (TDD) or a text telephone (TTY), call the Federal Relay

Service (FRS), toll free, at 1–800–877–8339.

SUPPLEMENTARY INFORMATION:

Full Text of Announcement

I. Funding Opportunity Description

Purpose of Program: The UISFL program provides grants for planning, developing, and carrying out projects to strengthen and improve undergraduate instruction in international studies and foreign languages in the United States.

Priorities: This notice contains two competitive preference priorities and one invitational priority. Competitive Preference Priority 1 is from the notice of final priority (NFP) published in the **Federal Register** on June 11, 2014 (79 FR 33432). Competitive Preference Priority 2 is from 34 CFR 658.35(a).

Note: Applicants must indicate in the recommended one-page abstract and on the FY 2020 UISFL program Profile Form in the application package whether they intend to address one or both of the competitive preference priorities or the invitational priority.

Competitive Preference Priorities: For FY 2020 and any subsequent year in which we make awards from the list of unfunded applications from this competition, these priorities are competitive preference priorities. Under 34 CFR 75.105(c)(2)(i), we award an additional two or three points to an application that meets Competitive Preference Priority 1, depending on how well the application meets the priority, and an additional two points to an application that meets Competitive Preference Priority 2, for a maximum of five additional points.

These priorities are:

Competitive Preference Priority 1 (0, 2, or 3 points).

Applications from Minority-Serving Institutions (MSIs) (as defined in this notice) or community colleges (as defined in this notice), whether as individual applicants or as part of a consortium of institutions of higher education (IHEs) (consortium) or a partnership between nonprofit educational organizations and IHEs (partnership).

An application from a consortium or partnership that has an MSI or a community college as the lead applicant will receive more points under this priority than applications in which the MSI or community college is a member of a consortium or partnership but not the lead applicant.

A consortium or partnership must undertake activities designed to incorporate foreign languages into the curriculum of the MSI or community college and to improve foreign language and international or area studies instruction on the MSI or community college campus.

Note: We will award either two or three points to an application that meets this priority. If an MSI or a community college is a single applicant, or the lead applicant in a consortium or partnership, the application will receive three additional points. If an MSI or community college is a member of a consortium or partnership, but not the lead applicant, the application will receive two additional points. No application will receive more than three additional points for this priority.

Competitive Preference Priority 2 (0 or 2 points).

Applications from IHEs or consortia of these institutions that require entering students to have successfully completed at least two years of secondary school foreign language instruction or that require each graduating student to earn two years of postsecondary credit in a foreign language (or have demonstrated equivalent competence in the foreign language); or, in the case of a two-year degree granting institution, offer two years of postsecondary credit in a foreign language.

Invitational Priority: For FY 2020 and any subsequent year in which we make awards from the list of unfunded applications from this competition, this priority is an invitational priority. Under 34 CFR 75.105(c)(1), we do not give an application that meets this invitational priority a competitive or absolute preference over other applications.

This priority is:

Training in Less Commonly Taught Languages or Thematic Focus on Area Studies or International Studies Programs.

Applications that propose programs or activities focused on language training or the development of area or international studies programs focused on contemporary topics or themes in conjunction with training in any modern foreign languages, except French, German, or Spanish.

Definitions: The following definitions are from the NFP.

Community college means an institution that meets the definition in section 312(f) of the Higher Education Act of 1965, as amended (HEA) (20 U.S.C. 1058(f)); or an IHE (as defined in section 101 of the HEA) that awards degrees and certificates, more than 50 percent of which are not bachelor's degrees (or an equivalent) or master's, professional, or other advanced degrees.

Minority-Serving Institution means an institution that is eligible to receive assistance under sections 316 through 320 of part A of title III, under part B of title III, or under title V of the HEA.

Note: The list of institutions currently designated as eligible under title III and title V is available at: *www2.ed.gov/about/offices/list/ope/idues/eligibility.html#el-inst.*

Application Requirements: In addition to any other requirements outlined in the application package for this program, section 604(a)(7) of the HEA, 20 U.S.C. 1124(a)(7), requires that each application from an IHE, consortia, or partnership include—

(1) Evidence that the applicant has conducted extensive planning prior to submitting the application;

(2) An assurance that the faculty and administrators of all relevant departments and programs served by the applicant are involved in ongoing collaboration with regard to achieving the stated objectives of the application;

(3) An assurance that students at the applicant institutions, as appropriate, will have equal access to, and derive benefits from, the UISFL program;

(4) An assurance that each applicant, consortium, or partnership will use the Federal assistance provided under the UISFL program to supplement and not supplant non-Federal funds the institution expends for programs to improve undergraduate instruction in international studies and foreign languages;

(5) A description of how the applicant will provide information to students regarding federally funded scholarship programs in related areas;

(6) An explanation of how the activities funded by the grant will reflect diverse perspectives and a wide range of views, and generate debate on world regions and international affairs, where applicable; and

(7) A description of how the applicant will encourage service in areas of national need, as identified by the Secretary.

Program Authority: 20 U.S.C. 1124.

Applicable Regulations: (a) The Education Department General Administrative Regulations in 34 CFR parts 75, 77, 79, 82, 84, 86, 97, 98, and 99. (b) The Office of Management and Budget Guidelines to Agencies on Governmentwide Debarment and Suspension (Nonprocurement) in 2 CFR part 180, as adopted and amended as regulations of the Department in 34 CFR part 3485. (c) The Uniform Administrative Requirements, Cost Principles, and Audit Requirements for Federal Awards in 2 CFR part 200, as adopted and amended as regulations of the Department in 34 CFR part 3474. (d)

The regulations in 34 CFR parts 655 and 658. (e) The NFP.

Note: The regulations in 34 CFR part 86 apply to IHEs only.

II. Award Information

Type of Award: Discretionary grants.

Estimated Available Funds: The Administration's budget request for FY 2020 does not include funds for this program. However, we are inviting applications to allow enough time to complete the grant process before the end of the current fiscal year, if Congress appropriates funds for this program.

Contingent upon the availability of funds and the quality of applications, we may make additional awards in FY 2021 from the list of unfunded applications from this competition.

Estimated Range of Awards:

For single applicant grants: $70,000–$100,000 for each 12-month budget period.

For consortia or partnership grants: $90,000–$120,000 for each 12-month budget period.

Estimated Average Size of Awards:

For single applicant grants: $83,603.

For consortia or partnership grants: $101,000.

Maximum Award: We will not make an award exceeding $100,000 for a single applicant for a single budget period of 12 months, or an award exceeding $120,000 for a consortium or partnership applicant for a single budget period of 12 months.

Estimated Number of Awards: 30.

Note: For applications from public and private nonprofit agencies and organizations, including professional and scholarly associations, the maximum award for a single budget period of 12 months is $100,000 if the entity applies alone and $120,000 if the entity applies with partner organizations.

Note: The Department is not bound by any estimates in this notice.

Project Period:

For single applicant grants: Up to 24 months.

For consortia or partnership grants: Up to 36 months.

III. Eligibility Information

1. *Eligible Applicants:* (a) IHEs; (b) consortia of IHEs; (c) partnerships between nonprofit educational organizations and IHEs; and (d) public and private nonprofit agencies and organizations, including professional and scholarly associations.

2. a. *Cost Sharing or Matching:* This program has a matching requirement under section 604(a)(3) of the HEA, 20 U.S.C. 1124(a)(3), and the regulations for this program in 34 CFR 658.41. UISFL program grantees must provide matching funds in either of the following ways: (i) Cash contributions from private sector corporations or foundations equal to one-third of the total project costs; or (ii) a combination of institutional and non-institutional cash or in-kind contributions including State and private sector corporation or foundation contributions, equal to one-half of the total project costs. The Secretary may waive or reduce the required matching share for institutions that are eligible to receive assistance under part A or part B of title III or under title V of the HEA that have submitted an application that demonstrates a need for a waiver or reduction.

b. *Supplement-Not-Supplant:* This program involves supplement-not-supplant funding requirements, which are described in section 604(a)(7)(D) of the HEA, 20 U.S.C. 1124(a)(7)(D).

3. *Subgrantees:* Under 34 CFR 75.708(b) and (c), a grantee under this competition may award subgrants—to directly carry out project activities described in its application—to the following types of entities: IHEs, nonprofit organizations, professional organizations, or businesses. The grantee may award subgrants to entities it has identified in the approved application or that it selects through a competition under procedures established by the grantee.

IV. Application and Submission Information

1. *Application Submission Instructions:* Applicants are required to follow the Common Instructions for Applicants to Department of Education Discretionary Grant Programs, published in the **Federal Register** on February 13, 2019 (84 FR 3768), and available at *www.govinfo.gov/content/pkg/FR-2019-02-13/pdf/2019-02206.pdf,* which contain requirements and information on how to submit an application.

2. *Submission of Proprietary Information:* Given the types of projects that may be proposed in applications for the UISFL grant competition, your application may include business information that you consider proprietary. In 34 CFR 5.11 we define ''business information'' and describe the process we use in determining whether any of that information is proprietary and, thus, protected from disclosure under Exemption 4 of the Freedom of Information Act (5 U.S.C. 552, as amended). Consistent with the process followed in the FY 2018 UISFL competition, we plan to post on our website a selection of funded abstracts and applications' narrative sections.

Consistent with Executive Order 12600, please designate in your application any information that you believe is exempt from disclosure under Exemption 4. In the appropriate Appendix section of your application, under ''Other Attachments Form,'' please list the page number or numbers on which we can find this information. For additional information please see 34 CFR 5.11(c).

3. *Intergovernmental Review:* This program is not subject to Executive Order 12372 and the regulations in 34 CFR part 79.

4. *Funding Restrictions:* We specify unallowable costs in 34 CFR 658.40. We reference additional regulations outlining funding restrictions in the *Applicable Regulations* section of this notice.

5. *Recommended Page Limit:* The application narrative (Part III) is where you, the applicant, address the selection criteria that reviewers use to evaluate your application. We recommend that you (1) limit the application narrative to no more than 40 pages and (2) use the following standards:

- A ''page'' is 8.5″ x 11″, on one side only, with 1″ margins at the top, bottom, and both sides.
- Double space (no more than three lines per vertical inch) all text in the application narrative, *except* titles, headings, footnotes, quotations, references, and captions, as well as all text in charts, tables, figures, and graphs.
- Use a font that is either 12 point or larger or no smaller than 10 pitch (characters per inch).
- Use one of the following fonts: Times New Roman, Courier, Courier New, or Arial.

The recommended page limit does not apply to Part I, the cover sheet; Part II, budget section, including the narrative budget justification; Part IV, the assurance and certifications; or the abstract, the resumes, the biography, or letters of support. However, the recommended page limit does apply to all of the application narrative.

V. Application Review Information

1. *Selection Criteria:* The selection criteria for this program are from 34 CFR 658.31, 658.32, 658.33, and 655.32. The maximum score for all the selection criteria, together with the maximum number of points awarded to applicants that address the competitive preference priorities, is 105 points for applications from IHEs, consortia, and partnerships; and 100 points for applications from public and private nonprofit agencies

and organizations, including professional and scholarly associations. The maximum score for each criterion is indicated in parentheses.

All Applications. All applications will be evaluated based on the general selection criteria as follows:

(a) *Plan of operation (up to 15 points).* (1) The Secretary reviews each application for information that shows the quality of the plan of operation for the project.

(2) The Secretary looks for information that shows—

(i) High quality in the design of the project;

(ii) An effective plan of management that ensures proper and efficient administration of the project;

(iii) A clear description of how the objectives of the project relate to the purpose of the program;

(iv) The way the applicant plans to use its resources and personnel to achieve each objective; and

(v) A clear description of how the applicant will provide equal access and treatment for eligible project participants who are members of groups that have been traditionally underrepresented, such as—

(A) Members of racial or ethnic minority groups;

(B) Women; and

(C) Handicapped persons.

(b) *Quality of key personnel (up to 10 points).* (1) The Secretary reviews each application for information that shows the quality of the key personnel the applicant plans to use on the project.

(2) The Secretary looks for information that shows—

(i) The qualifications of the project director (if one is to be used);

(ii) The qualifications of each of the other key personnel to be used in the project. In the case of faculty, the qualifications of the faculty and the degree to which that faculty is directly involved in the actual teaching and supervision of students; and

(iii) The time that each person referred to in paragraphs (b)(2)(i) and (ii) of this section plans to commit to the project; and

(iv) The extent to which the applicant, as part of its nondiscriminatory employment practices, encourages applications for employment from persons who are members of groups that have been traditionally underrepresented, such as members of racial or ethnic minority groups, women, handicapped persons, and the elderly.

(3) To determine the qualifications of a person, the Secretary considers evidence of past experience and training, in fields related to the objectives of the project, as well as other information that the applicant provides.

(c) *Budget and cost effectiveness (up to 10 points).* (1) The Secretary reviews each application for information that shows that the project has an adequate budget and is cost effective.

(2) The Secretary looks for information that shows—

(i) The budget for the project is adequate to support the project activities; and

(ii) Costs are reasonable in relation to the objectives of the project.

(d) *Evaluation plan (up to 20 points).* (1) The Secretary reviews each application for information that shows the quality of the evaluation plan for the project.

(2) The Secretary looks for information that shows methods of evaluation that are appropriate for the project and, to the extent possible, are objective and produce data that are quantifiable.

(e) *Adequacy of resources (up to 5 points).* (1) The Secretary reviews each application for information that shows that the applicant plans to devote adequate resources to the project.

(2) The Secretary looks for information that shows—

(i) Other than library, facilities that the applicant plans to use are adequate (language laboratory, museums, etc.); and

(ii) The equipment and supplies that the applicant plans to use are adequate.

Applications from IHEs, Consortia, or Partnerships. Applications submitted by IHEs, consortia, or partnerships will also be evaluated based on the following criteria:

(f) *Commitment to international studies (up to 15 points).* (1) The Secretary reviews each application for information that shows the applicant's commitment to the international studies program.

(2) The Secretary looks for information that shows—

(i) The institution's current strength as measured by the number of international studies courses offered;

(ii) The extent to which planning for the implementation of the proposed program has involved the applicant's faculty, as well as administrators;

(iii) The institutional commitment to the establishment, operation, and continuation of the program as demonstrated by optimal use of available personnel and other resources; and

(iv) The institutional commitment to the program as demonstrated by the use of institutional funds in support of the program's objectives.

(g) *Elements of the proposed international studies program (up to 10 points).* (1) The Secretary reviews each application for information that shows the nature of the applicant's proposed international studies program.

(2) The Secretary looks for information that shows—

(i) The extent to which the proposed activities will contribute to the implementation of a program in international studies and foreign languages at the applicant institution;

(ii) The interdisciplinary aspects of the program;

(iii) The number of new and revised courses with an international perspective that will be added to the institution's programs; and

(iv) The applicant's plans to improve or expand language instruction.

(h) *Need for and prospective results of the proposed program (up to 15 points).* (1) The Secretary reviews each application for information that shows the need for and the prospective results of the applicant's proposed program.

(2) The Secretary looks for information that shows—

(i) The extent to which the proposed activities are needed at the applicant institution;

(ii) The extent to which the proposed use of Federal funds will result in the implementation of a program in international studies and foreign languages at the applicant institution;

(iii) The likelihood that the activities initiated with Federal funds will be continued after Federal assistance is terminated; and

(iv) The adequacy of the provisions for sharing the materials and results of the program with other institutions of higher education.

Applications from Public and Private Nonprofit Agencies and Organizations, Including Professional and Scholarly Associations. Applications from public and private nonprofit agencies and organizations, including professional and scholarly associations, will also be evaluated based on the following criteria:

Need for and potential impact of the proposed project in improving international studies and the study of modern foreign language at the undergraduate level (up to 40 points). (1) The Secretary reviews each application for information that shows the need for and potential impact of the applicant's proposed projects in improving international studies and the study of modern foreign language at the undergraduate level.

(2) The Secretary looks for information that shows—

(i) The extent to which the applicant's proposed apportionment of Federal funds among the various budget

categories for the proposed project will contribute to achieving results;

(ii) The international nature and contemporary relevance of the proposed project;

(iii) The extent to which the proposed project will make an especially significant contribution to the improvement of the teaching of international studies or modern foreign languages at the undergraduate level; and

(iv) The adequacy of the applicant's provisions for sharing the materials and results of the proposed project with the higher education community.

Additional information regarding these criteria is in the application package for this program. The total number of points available under these selection criteria combined with the competitive preference priorities, is as follows:

Selection criteria	UISFL IHEs	UISFL consortia and partnerships	UISFL public and private nonprofit agencies and organizations, including professional and scholarly associations
(a) Plan of Operation	15	15	15
(b) Quality of Key Personnel	10	10	10
(c) Budget and Cost Effectiveness	10	10	10
(d) Evaluation Plan	20	20	20
(e) Adequacy of Resources	5	5	5
(f) Commitment to International Studies	15	15	n/a
(g) Elements of Proposed International Studies Program	10	10	n/a
(h) Need for and Prospective Results of Proposed Program	15	15	n/a
(i) Need for and Potential Impact of the Proposed Project in Improving International Studies and the Study of Modern Foreign Languages at the Undergraduate Level	n/a	n/a	40
Sub-Total	100	100	100
Competitive Preference Priority #1 (Optional)	3	3	n/a
Competitive Preference Priority #2 (Optional)	2	2	n/a
Total Possible Points	105	105	100

2. *Review and Selection Process:* We remind potential applicants that in reviewing applications in any discretionary grant competition, the Secretary may consider, under 34 CFR 75.217(d)(3), the past performance of the applicant in carrying out a previous award, such as the applicant's use of funds, achievement of project objectives, and compliance with grant conditions. The Secretary may also consider whether the applicant failed to submit a timely performance report or submitted a report of unacceptable quality.

In addition, in making a competitive grant award, the Secretary also requires various assurances including those applicable to Federal civil rights laws that prohibit discrimination in programs or activities receiving Federal financial assistance from the Department of Education (34 CFR 100.4, 104.5, 106.4, 108.8, and 110.23).

Separate rank order slates for applications from (1) IHEs, consortia, and partnerships; and (2) public and private nonprofit agencies and organizations will be developed and used to make funding recommendations. Each slate will include the peer reviewers' scores from the highest score to the lowest score for each application.

The Secretary, to the extent practicable and consistent with the criterion of excellence, seeks to encourage diversity by ensuring that a variety of types of projects and institutions receive funding.

3. *Risk Assessment and Specific Conditions:* Consistent with 2 CFR 200.205, before awarding grants under this competition, the Department conducts a review of the risks posed by applicants. Under 2 CFR 3474.10, the Secretary may impose specific conditions and, in appropriate circumstances, high-risk conditions on a grant if the applicant or grantee is not financially stable; has a history of unsatisfactory performance; has a financial or other management system that does not meet the standards in 2 CFR part 200, subpart D; has not fulfilled the conditions of a prior grant; or is otherwise not responsible.

4. *Integrity and Performance System:* If you are selected under this competition to receive an award that over the course of the project period may exceed the simplified acquisition threshold (currently $250,000), under 2 CFR 200.205(a)(2) we must make a judgment about your integrity, business ethics, and record of performance under Federal awards—that is, the risk posed by you as an applicant—before we make an award. In doing so, we must consider any information about you that is in the integrity and performance system (currently referred to as the Federal Awardee Performance and Integrity Information System (FAPIIS)), accessible through the System for Award Management. You may review and comment on any information about yourself that a Federal agency previously entered and that is currently in FAPIIS.

Please note that, if the total value of your currently active grants, cooperative agreements, and procurement contracts from the Federal Government exceeds $10,000,000, the reporting requirements in 2 CFR part 200, Appendix XII, require you to report certain integrity information to FAPIIS semiannually. Please review the requirements in 2 CFR part 200, Appendix XII, if this grant plus all the other Federal funds you receive exceed $10,000,000.

VI. Award Administration Information

1. *Award Notices:* If your application is successful, we notify your U.S. Representative and U.S. Senators and send you a Grant Award Notification (GAN); or we may send you an email containing a link to access an electronic version of your GAN. We may notify you informally, also.

If your application is not evaluated or not selected for funding, we notify you.

2. *Administrative and National Policy Requirements:* We identify administrative and national policy requirements in the application package and reference these and other requirements in the *Applicable Regulations* section of this notice.

We reference the regulations outlining the terms and conditions of an award in the *Applicable Regulations* section of this notice and include these and other specific conditions in the GAN. The GAN also incorporates your approved application as part of your binding commitments under the grant.

3. *Open Licensing Requirements:* Unless an exception applies, if you are awarded a grant under this competition, you will be required to openly license to the public grant deliverables created in whole, or in part, with Department grant funds. When the deliverable consists of modifications to pre-existing works, the license extends only to those modifications that can be separately identified and only to the extent that open licensing is permitted under the terms of any licenses or other legal restrictions on the use of pre-existing works. Additionally, a grantee or subgrantee that is awarded competitive grant funds must have a plan to disseminate these public grant deliverables. This dissemination plan can be developed and submitted after your application has been reviewed and selected for funding. For additional information on the open licensing requirements please refer to 2 CFR 3474.20.

4. *Reporting:* (a) If you apply for a grant under this competition, you must ensure that you have in place the necessary processes and systems to comply with the reporting requirements in 2 CFR part 170 should you receive funding under the competition. This does not apply if you have an exception under 2 CFR 170.110(b).

(b) At the end of your project period, you must submit a final performance report, including financial information, as directed by the Secretary. If you receive a multiyear award, you must submit an annual performance report that provides the most current performance and financial expenditure information as directed by the Secretary under 34 CFR 75.118. The Secretary may also require more frequent performance reports under 34 CFR 75.720(c). For specific requirements on reporting, please go to *www.ed.gov/fund/grant/apply/appforms/appforms.html.*

Performance reports for the UISFL program must be submitted electronically into the office of International and Foreign Language Education web-based reporting system, International Resource Information System (IRIS). For information about IRIS and to view the reporting instructions, please go to *http://iris.ed.gov/iris/pdfs/UISFL.pdf.*

5. *Performance Measures:* Under the Government Performance and Results Act of 1993, the Department will use the following performance measures to evaluate the success of the UISFL program: Percentage of UISFL projects that added or enhanced courses in international studies in critical world areas and priority foreign languages; and percentage of UISFL projects that established certificate and/or undergraduate degree programs in international or foreign language studies.

6. *Continuation Awards:* In making a continuation award under 34 CFR 75.253, the Secretary considers, among other things: Whether a grantee has made substantial progress in achieving the goals and objectives of the project; whether the grantee has expended funds in a manner that is consistent with its approved application and budget; and, if the Secretary has established performance measurement requirements, the performance targets in the grantee's approved application.

In making a continuation award, the Secretary also considers whether the grantee is operating in compliance with the assurances in its approved application, including those applicable to Federal civil rights laws that prohibit discrimination in programs or activities receiving Federal financial assistance from the Department (34 CFR 100.4, 104.5, 106.4, 108.8, and 110.23).

VII. Other Information

Accessible Format: Individuals with disabilities can obtain this document and a copy of the application package in an accessible format (*e.g.,* braille, large print, audiotape, or compact disc) on request to the program contact person listed under **FOR FURTHER INFORMATION CONTACT**.

Electronic Access to This Document: The official version of this document is the document published in the **Federal Register**. You may access the official edition of the **Federal Register** and the Code of Federal Regulations at *www.govinfo.gov.* At this site you can view this document, as well as all other documents of this Department published in the **Federal Register**, in text or Portable Document Format (PDF). To use PDF you must have Adobe Acrobat Reader, which is available free at the site.

You may also access documents of the Department published in the **Federal Register** by using the article search feature at: *www.federalregister.gov.* Specifically, through the advanced search feature at this site, you can limit your search to documents published by the Department.

Robert L. King,

Assistant Secretary for Postsecondary Education.

[FR Doc. 2020–00374 Filed 1–13–20; 8:45 am]

BILLING CODE 4000–01–P

DEPARTMENT OF ENERGY

National Petroleum Council

AGENCY: Office of Fossil Energy, Department of Energy.

ACTION: Notice of renewal.

SUMMARY: Pursuant to the Federal Advisory Committee Act, and Title 41, Code of Federal Regulations, and following consultation with the Committee Management Secretariat, General Services Administration, notice is hereby given that the National Petroleum Council has been renewed for a two-year period.

The Council will continue to provide advice, information, and recommendations to the Secretary of Energy on matters relating to oil and natural gas, or the oil and natural gas industries. The Secretary of Energy has determined that renewal of the National Petroleum Council is essential to the conduct of the Department's business and in the public interest in connection with the performance of duties imposed by law upon the Department of Energy. The Council will continue to operate in accordance with the provisions of the Federal Advisory Committee Act, the General Services Administration Final Rule on Federal Advisory Committee Management, and other directives and instructions issued in implementation of those Acts.

FOR FURTHER INFORMATION CONTACT: Ms. Nancy Johnson at (202) 586–6458; or email: *nancy.johnson@hq.doe.gov.*

Signed in Washington, DC on January 8, 2020.

Rachael J. Beitler,

Acting Committee Management Officer.

[FR Doc. 2020–00433 Filed 1–13–20; 8:45 am]

BILLING CODE 6450–01–P

DEPARTMENT OF ENERGY

Federal Energy Regulatory Commission

[Project No. 15021–000]

Bard College, New York; Notice of Application Tendered for Filing With the Commission and Soliciting Additional Study Requests

Take notice that the following hydroelectric application has been filed with the Commission and is available for public inspection.

a. *Type of Application:* Exemption from Licensing.

b. *Project No.:* 15021–000.

c. *Date Filed:* December 23, 2019.

d. *Applicant:* Bard College, New York.

e. *Name of Project:* Annandale Micro Hydropower Project.

f. *Location:* On Saw Kill, a tributary of the Hudson River, in the Town of Red Hook, Dutchess County, New York. The project does not occupy federal land.

g. *Filed Pursuant to:* Public Utility Regulatory Policies Act of 1978, 16 U.S.C. 2705, 2708 (2018), *amended by* the Hydropower Regulatory Efficiency Act of 2013, Public Law 113–23, 127 Stat. 493 (2013).

h. *Applicant Contact:* Randy Clum, Director, Buildings and Grounds, Bard College, 30 Campus Road, Annandale-on-Hudson, NY 12504; and/or Joel Herm/Jan Borchert, Current Hydro, Inc., P.O. Box 224, Rhinebeck, NY 12572.

i. *FERC Contact:* Monir Chowdhury at (202) 502–6736; or email at *monir.chowdhury@ferc.gov*.

j. *Cooperating agencies:* Federal, state, local, and tribal agencies with jurisdiction and/or special expertise with respect to environmental issues that wish to cooperate in the preparation of the environmental document should follow the instructions for filing such requests described in item l below. Cooperating agencies should note the Commission's policy that agencies that cooperate in the preparation of the environmental document cannot also intervene. See, 94 FERC ¶ 61,076 (2001).

k. Pursuant to section 4.32(b)(7) of 18 CFR of the Commission's regulations, if any resource agency, Indian Tribe, or person believes that an additional scientific study should be conducted in order to form an adequate factual basis for a complete analysis of the application on its merit, the resource agency, Indian Tribe, or person must file a request for a study with the Commission not later than 60 days from the date of filing of the application, and serve a copy of the request on the applicant.

l. *Deadline for filing additional study requests and requests for cooperating agency status:* March 9, 2020.

The Commission strongly encourages electronic filing. Please file additional study requests and requests for cooperating agency status using the Commission's eFiling system at *http://www.ferc.gov/docs-filing/efiling.asp*. For assistance, please contact FERC Online Support at *FERCOnlineSupport@ferc.gov,* (866) 208–3676 (toll free), or (202) 502–8659 (TTY). In lieu of electronic filing, please send a paper copy to: Secretary, Federal Energy Regulatory Commission, 888 First Street NE, Washington, DC 20426. The first page of any filing should include docket number P–15021–000.

m. This application is not ready for environmental analysis at this time.

n. *The proposed project would consist of:* (1) An existing 240-foot-long dam that impounds a 3-acre reservoir; (2) three new 6-foot-diameter, 9.5-foot-high concrete cylindrical tanks, each housing a 4-kilowatt gravitational vortex turbine-generator unit; (3) a new 240-volt, 60-foot-long transmission line; and (4) appurtenant facilities. The project is estimated to generate an average of 61 megawatt-hours annually. The applicant proposes to operate the project in a run-of-river mode.

o. A copy of the application is available for review at the Commission in the Public Reference Room or may be viewed on the Commission's website at *http://www.ferc.gov* using the ''eLibrary'' link. Enter the docket number excluding the last three digits in the docket number field to access the document. For assistance, contact FERC Online Support. A copy is also available for inspection and reproduction at the address in item h above.

You may also register online at *http://www.ferc.gov/docs-filing/esubscription.asp* to be notified via email of new filings and issuances related to this or other pending projects. For assistance, contact FERC Online Support.

p. *Procedural schedule and final amendments:* The application will be processed according to the following preliminary schedule. Revisions to the schedule will be made as appropriate (*e.g.,* if there are no deficiencies or a need for additional information, the schedule would be shortened).

Issue Notice of Acceptance ..	March 2020.
Issue Scoping Document 1 for comments.	April 2020.
Comments on Scoping Document 1.	May 2020.
Issue Scoping Document 2 (if necessary).	June 2020.
Issue Notice of Ready for Environmental Analysis.	June 2020.
Commission issues EA	December 2020.

Dated: January 8, 2020.

Kimberly D. Bose,

Secretary.

[FR Doc. 2020–00388 Filed 1–13–20; 8:45 am]

BILLING CODE 6717–01–P

DEPARTMENT OF ENERGY

Federal Energy Regulatory Commission

[Project No. 298–081]

Southern California Edison Company; Notice of Application Tendered for Filing With the Commission And Establishing Procedural Schedule for Licensing and Deadline for Submission of Final Amendments

Take notice that the following hydroelectric application has been filed with the Commission and is available for public inspection.

a. *Type of Application:* New Major License.

b. *Project No.:* 298–081.

c. *Date Filed:* December 23, 2019.

d. *Applicant:* Southern California Edison Company.

e. *Name of Project:* Kaweah Hydroelectric Project.

f. *Location:* The existing project is located on the Kaweah River and East Fork Kaweah River in Tulare County, California. The project occupies 176.26 acres of public lands administered by the Bureau of Land Management. The project incorporates non-project facilities (diversion structures and water conveyance facilities) located within Sequoia National Park, which are authorized by a National Park Service special use permit.

g. *Filed Pursuant to:* Federal Power Act, 16 U.S.C. 791 (a)–825(r).

h. *Applicant Contact:* Wayne P. Allen, Principle Manager, Hydro Licensing and Implementation, Southern California Edison Company, 1515 Walnut Grove Avenue, Rosemead, CA 91770, (626) 302–9741 or email at *wayne.allen@sce.com*.

i. *FERC Contact:* Jim Hastreiter, (503) 552–2760 or *james.hastreiter@ferc.gov*.

j. This application is not ready for environmental analysis at this time.

k. The Project *Description:* The Kaweah Project has three developments consisting of the following components.

Kaweah No. 1

This development consists of: (1) A 20-foot-long and 6-foot-high concrete

diversion dam on the East Fork Kaweah River, (2) a 30,723-foot-long steel flume, (3) a forebay tank, (4) a 3,340-foot-long penstock, and (4) a powerhouse with an impulse turbine rated at 2.25 megawatts (MW).

Kaweah No. 2

This development consists of: (1) A 161-foot-long and 7-foot-high masonry diversion dam on the Kaweah River, (2) a 16,738-foot-long concrete-lined ditch, (3) a 3,822-foot-long steel flume, (4) a 1,047-foot-long steel pipe, (5) a forebay, (6) a 1,012-foot-long buried penstock, and (7) a powerhouse with a Francis turbine rated at 1.8 MW.

Kaweah No. 3

This development consists of: (1) A 2,580 foot-long concrete-lined flume, (2) an embankment forebay, (3) a 3,151 foot-long penstock, and (4) a powerhouse with two impulse turbines rated at a combined 4.8 MW.

The project has a primary 4.09-mile-long transmission line extending from the Kaweah No. 3 powerhouse to a substation, and two tap lines (120-foot-long and 0.4-mile-long) connecting Kaweah No. 1 and No. 2 powerhouses, respectively, to the primary line, and appurtenant facilities.

Non-project Facilities

The project makes use of several non-project facilities located in Sequoia National Park. These facilities comprise portions of Kaweah No. 1 and No. 3 developments: (1) Two diversion structures on the Middle Fork and Marble Fork Kaweah Rivers, (2) a 21,000-foot-long steel flume that is the initial section of flowline which conveys water to the Kaweah No. 3 powerhouse, and (3) four small reservoirs on the East Fork Kaweah River. These facilities are operated under a special use permit (Permit No. PWR–SEKI–6000–2016–015) issued to SCE by the National Park Service, which expires on September 8, 2026.

The project developments operate independently of one another and in a run-of-river mode. Water captured by the diversion structures is transported through connecting conveyance facilities and penstocks to the powerhouses for power generation and then returned to the river at the tailraces. A portion of the water in Kaweah No. 1 and No. 2 flowlines is used to meet downstream contractual obligations for water delivery with pre-1914 water users.

The project forebays and diversion pools have minimal water storage capability of about 13 acre-feet (AF). The four small non-project reservoirs located on tributaries to the East Fork Kaweah River upstream of the Kaweah No. 1 diversion dam and within the Sequoia National Park store a maximum of 1,153 AF of water, which is used to generate power at the Kaweah No. 1 powerhouse.

The project diversions create two bypassed river reaches. The Kaweah No. 1 development bypasses streamflow around 4.7 miles of the East Fork Kaweah River from the diversion dam to the confluence with the Kaweah River. The Kaweah No. 2 development bypasses streamflow around 4.1 miles of the Kaweah River from the diversion dam to the Kaweah No. 2 powerhouse tailrace.

The volume and timing of streamflow diverted is a function of inflow, minimum flow and ramping rate requirements of the existing license, and the flow required to maintain sufficient head in the water conveyance facilities (flowlines) to meet downstream water delivery contractual obligations. The Kaweah No.1 development flowline has a maximum hydraulic capacity of 24 cubic feet per second (cfs), the Kaweah No. 2 development flowline has a maximum hydraulic capacity of 87 cfs, and the Kaweah No. 3 development flowline has a maximum hydraulic capacity of 97 cfs. To maintain sufficient head pressure to meet downstream water deliveries, SCE must maintain at least 1 cfs flow through the Kaweah No. 1 development and 3 cfs through the Kaweah No. *2* development.

SCE is proposing to modify the existing project boundary to encompass all facilities necessary for operation and maintenance of the project, while removing lands that are not related to project functions. SCE proposes to include the existing Kaweah No. 1 forebay access road as a project facility.

SCE proposes to remove part of the ramping rate requirement when increasing flows below the Kaweah No. 1 and No. 2 diversion dams. The ramping rate in the existing license requires increasing and decreasing flows below Kaweah No. 1 and No. 2 powerhouses to not be altered at a rate greater than 30 percent of the existing stream flow per hour.

SCE also proposes to modify license article 405 to eliminate the need for future modification requests to resource agencies. Historically, SCE has requested approval from California Department of Fish and Wildlife and U.S. Fish and Wildlife Service (FWS) to temporarily reduce minimum flow releases below Kaweah No. 1 diversion and Kaweah No. 2 diversion when projected inflows were approaching the combined flow necessary to meet both water supply and minimum flow release requirements. These flow modifications were necessary to ensure compliance with required minimum flows based on uncertainty in actual runoff and inflow.

SCE further proposes to remove required protective measures for the elderberry shrub, the host plant for the federally threatened valley elderberry longhorn beetle (*Desmocerus californicus dimorphus*). In 2014, the FWS determined that Tulare County was no longer considered within the valley elderberry longhorn beetle's range.

l. *Locations of the Application:* A copy of the application is available for review at the Commission in the Public Reference Room or may be viewed on the Commission's website at *http://www.ferc.gov* using the ''eLibrary'' link. Enter the docket number excluding the last three digits in the docket number field to access the document. For assistance, please contact FERC Online Support at *FERCOnlineSupport@ferc.gov,* (866) 208–3676 (toll free), or (202) 502–8659 (TTY). A copy is also available for inspection and reproduction at the address in item (h) above.

m. You may also register online at *http://www.ferc.gov/docs-filing/esubscription.asp* to be notified via email of new filings and issuances related to this or other pending projects. For assistance, contact FERC Online Support.

n. *Procedural Schedule:* The application will be processed according to the following preliminary Hydro Licensing Schedule. Revisions to the schedule may be made as appropriate.

Milestone	Target date
Notice of Acceptance/Notice of Ready for Environmental Analysis.	February 2020.
Filing of recommendations, preliminary terms and conditions, and fishway prescriptions.	April 2020.
Commission issues Draft EA	October 2020.
Comments on Draft EA	November 2020.
Modified terms and conditions.	January 2021.
Commission issues Final EA	April 2021.

o. Final amendments to the application must be filed with the Commission no later than 30 days from the issuance date of the notice of ready for environmental analysis.

Dated: January 8, 2020.

Kimberly D. Bose,

Secretary.

[FR Doc. 2020–00387 Filed 1–13–20; 8:45 am]

BILLING CODE 6717–01–P

DEPARTMENT OF ENERGY

Federal Energy Regulatory Commission

[Docket No. ER20–637–000]

Wilton Wind Energy I, LLC; Supplemental Notice That Initial Market-Based Rate Filing Includes Request for Blanket Section 204 Authorization

This is a supplemental notice in the above-referenced proceeding of Wilton Wind Energy I, LLC's application for market-based rate authority, with an accompanying rate tariff, noting that such application includes a request for blanket authorization, under 18 CFR part 34, of future issuances of securities and assumptions of liability.

Any person desiring to intervene or to protest should file with the Federal Energy Regulatory Commission, 888 First Street NE, Washington, DC 20426, in accordance with Rules 211 and 214 of the Commission's Rules of Practice and Procedure (18 CFR 385.211 and 385.214). Anyone filing a motion to intervene or protest must serve a copy of that document on the Applicant.

Notice is hereby given that the deadline for filing protests with regard to the applicant's request for blanket authorization, under 18 CFR part 34, of future issuances of securities and assumptions of liability, is January 27, 2020.

The Commission encourages electronic submission of protests and interventions in lieu of paper, using the FERC Online links at *http://www.ferc.gov.* To facilitate electronic service, persons with internet access who will eFile a document and/or be listed as a contact for an intervenor must create and validate an eRegistration account using the eRegistration link. Select the eFiling link to log on and submit the intervention or protests.

Persons unable to file electronically should submit an original and 5 copies of the intervention or protest to the Federal Energy Regulatory Commission, 888 First Street NE, Washington, DC 20426.

The filings in the above-referenced proceeding are accessible in the Commission's eLibrary system by clicking on the appropriate link in the above list. They are also available for electronic review in the Commission's Public Reference Room in Washington, DC. There is an eSubscription link on the website that enables subscribers to receive email notification when a document is added to a subscribed docket(s). For assistance with any FERC Online service, please email *FERCOnlineSupport@ferc.gov.* or call (866) 208–3676 (toll free). For TTY, call (202) 502–8659.

Dated: January 7, 2020.

Kimberly D. Bose,

Secretary.

[FR Doc. 2020–00347 Filed 1–13–20; 8:45 am]

BILLING CODE 6717–01–P

DEPARTMENT OF ENERGY

Federal Energy Regulatory Commission

[Docket No. CP20–31–000]

Dominion Energy Questar Pipeline, LLC; Notice of Application

Take notice that on December 20, 2019, Dominion Energy Questar Pipeline, LLC (DEQP), 333 South State St, Salt Lake City, Utah 84111, filed an application in Docket No. CP20–31–000, pursuant to section 7(b) of the Natural Gas Act (NGA) and the Federal Energy Regulatory Commission's (Commission) regulations seeking authorization to abandon by sale to North Shore Energy, LLC (North Shore), approximately 20.8 miles of 10-inch-diameter pipeline, including associated metering and regulating facilities and appurtenances. The pipeline facilities, known as Jurisdictional Lateral (JL) 28 Facilities, are all located in Sweetwater County, Wyoming, (Sweetwater Pipeline Abandonment Project), all as more fully described in the application which is on file with the Commission and open to public inspection. The filing may also be viewed on the web at *http://www.ferc.gov* using the ''eLibrary'' link. Enter the docket number excluding the last three digits in the docket number field to access the document. For assistance, contact FERC at *FERCOnlineSupport@ferc.gov* or call toll-free, (866) 208–3676 or TTY, (202) 502–8659.

DEQP states that the proposed abandonment will serve the public convenience and necessity because the JL 28 Facilities are presently underutilized and no longer needed to provide jurisdictional service. The proposed abandonment will not impede traditional gas flow or access to downstream markets. DEQP also states that North Shore intends to incorporate the JL 28 Facilities into its existing gathering system located in the area.

Any questions regarding this application should be directed to Mark C. Stevens, General Manager—Regulatory Affairs (Gas) Dominion Energy Services, LLC, 707 E Main Street, 8th & Main—20th Floor, Richmond, VA 23219, by phone at (804) 775–5431, or by email at *mark.c.stevens@dominionenergy.com.*

Pursuant to section 157.9 of the Commission's rules, 18 CFR 157.9, within 90 days of this Notice the Commission staff will either: Complete its environmental assessment (EA) and place it into the Commission's public record (eLibrary) for this proceeding; or issue a Notice of Schedule for Environmental Review. If a Notice of Schedule for Environmental Review is issued, it will indicate, among other milestones, the anticipated date for the Commission staff's issuance of the final environmental impact statement (FEIS) or EA for this proposal. The filing of the EA in the Commission's public record for this proceeding or the issuance of a Notice of Schedule for Environmental Review will serve to notify federal and state agencies of the timing for the completion of all necessary reviews, and the subsequent need to complete all federal authorizations within 90 days of the date of issuance of the Commission staff's FEIS or EA.

There are two ways to become involved in the Commission's review of this project. First, any person wishing to obtain legal status by becoming a party to the proceedings for this project should, on or before the comment date stated below file with the Federal Energy Regulatory Commission, 888 First Street NE, Washington, DC 20426, a motion to intervene in accordance with the requirements of the Commission's Rules of Practice and Procedure (18 CFR 385.214 or 385.211) and the Regulations under the NGA (18 CFR 157.10). A person obtaining party status will be placed on the service list maintained by the Secretary of the Commission and will receive copies of all documents filed by the applicant and by all other parties. A party must submit 3 copies of filings made in the proceeding with the Commission and must provide a copy to the applicant and to every other party. Only parties to the proceeding can ask for court review of Commission orders in the proceeding.

However, a person does not have to intervene in order to have comments considered. The second way to participate is by filing with the Secretary of the Commission, as soon as possible, an original and two copies of comments in support of or in opposition to this project. The Commission will consider these comments in determining the appropriate action to be taken, but the filing of a comment alone will not serve to make the filer a party to the proceeding. The Commission's rules require that persons filing

comments in opposition to the project provide copies of their protests only to the party or parties directly involved in the protest.

Persons who wish to comment only on the environmental review of this project should submit an original and two copies of their comments to the Secretary of the Commission. Environmental commentors will be placed on the Commission's environmental mailing list, and will be notified of any meetings associated with the Commission's environmental review process. Environmental commentors will not be required to serve copies of filed documents on all other parties. However, the non-party commentors will not receive copies of all documents filed by other parties or issued by the Commission and will not have the right to seek court review of the Commission's final order.

The Commission strongly encourages electronic filings of comments, protests and interventions in lieu of paper using the ''eFiling'' link at *http://www.ferc.gov.* Persons unable to file electronically should submit an original and 3 copies of the protest or intervention to the Federal Energy Regulatory Commission, 888 First Street NE, Washington, DC 20426.

Comment Date: 5:00 p.m. Eastern Time on January 28, 2020.

Dated: January 7, 2020.

Kimberly D. Bose,

Secretary.

[FR Doc. 2020–00346 Filed 1–13–20; 8:45 am]

BILLING CODE 6717–01–P

DEPARTMENT OF ENERGY

Federal Energy Regulatory Commission

Combined Notice of Filings #2

Take notice that the Commission received the following electric rate filings:

Docket Numbers: ER20–420–001.
Applicants: Midcontinent Independent System Operator, Inc.
Description: Tariff Amendment: 2020–01–08_SA 3375 Entergy Arkansas-Searcy Solar Substitute GIA (J893) to be effective 11/5/2019.
Filed Date: 1/8/20.
Accession Number: 20200108–5103.
Comments Due: 5 p.m. ET 1/29/20.

Docket Numbers: ER20–558–001.
Applicants: Duke Energy Carolinas, LLC.
Description: Tariff Amendment: DEC–NCEMC Amendment to NITSA Amendment (SA No. 210) to be effective 1/1/2020.
Filed Date: 1/8/20.
Accession Number: 20200108–5119.
Comments Due: 5 p.m. ET 1/29/20.

Docket Numbers: ER20–573–001.
Applicants: GridLiance Heartland LLC.
Description: Tariff Amendment: Amended GLH Certificate of Concurrence Filing to be effective 12/31/9998.
Filed Date: 1/8/20.
Accession Number: 20200108–5083.
Comments Due: 5 p.m. ET 1/29/20.

Docket Numbers: ER20–752–000.
Applicants: Emera Maine.
Description: § 205(d) Rate Filing: Interconnection Agreement Houlton Water Company to be effective 12/31/9998.
Filed Date: 1/8/20.
Accession Number: 20200108–5075.
Comments Due: 5 p.m. ET 1/29/20.

Docket Numbers: ER20–753–000.
Applicants: Southern California Edison Company.
Description: § 205(d) Rate Filing: Third Amendment Interconnection Agreement Wintec V WDT1014 SA No. 525 to be effective 1/9/2020.
Filed Date: 1/8/20.
Accession Number: 20200108–5082.
Comments Due: 5 p.m. ET 1/29/20.

Docket Numbers: ER20–754–000.
Applicants: Public Service Company of Colorado.
Description: § 205(d) Rate Filing: PSC-Nereo-NonConf-LGIA–555–0.0.0 to be effective 1/9/2020.
Filed Date: 1/8/20.
Accession Number: 20200108–5088.
Comments Due: 5 p.m. ET 1/29/20.

Docket Numbers: ER20–755–000.
Applicants: Midcontinent Independent System Operator, Inc., ITC Midwest LLC.
Description: § 205(d) Rate Filing: 2020–01–08_SA 3397 ITC–MEC FSA (J475) to be effective 3/9/2020.
Filed Date: 1/8/20.
Accession Number: 20200108–5090.
Comments Due: 5 p.m. ET 1/29/20.

Docket Numbers: ER20–756–000.
Applicants: North Jersey Energy Associates, A Limited Partnership.
Description: Compliance filing: Informational Filing Regarding Upstream Change in Control and Request for Waiver to be effective 3/9/2020.
Filed Date: 1/8/20.
Accession Number: 20200108–5101.
Comments Due: 5 p.m. ET 1/29/20.

Docket Numbers: ER20–757–000.
Applicants: Pacific Gas and Electric Company.
Description: § 205(d) Rate Filing: Amendment to Silicon Valley Power Agreement (RS 248) to be effective 3/9/2020.
Filed Date: 1/8/20.
Accession Number: 20200108–5114.
Comments Due: 5 p.m. ET 1/29/20.

The filings are accessible in the Commission's eLibrary system by clicking on the links or querying the docket number.

Any person desiring to intervene or protest in any of the above proceedings must file in accordance with Rules 211 and 214 of the Commission's Regulations (18 CFR 385.211 and 385.214) on or before 5:00 p.m. Eastern time on the specified comment date. Protests may be considered, but intervention is necessary to become a party to the proceeding.

eFiling is encouraged. More detailed information relating to filing requirements, interventions, protests, service, and qualifying facilities filings can be found at: *http://www.ferc.gov/docs-filing/efiling/filing-req.pdf.* For other information, call (866) 208–3676 (toll free). For TTY, call (202) 502–8659.

Dated: January 8, 2020.

Nathaniel J. Davis, Sr.,

Deputy Secretary.

[FR Doc. 2020–00435 Filed 1–13–20; 8:45 am]

BILLING CODE 6717–01–P

DEPARTMENT OF ENERGY

Federal Energy Regulatory Commission

[Docket No. ER20–744–000]

Actual Energy, Inc.; Supplemental Notice That Initial Market-Based Rate Filing Includes Request for Blanket Section 204 Authorization

This is a supplemental notice in the above-referenced proceeding of Actual Energy, Inc.'s application for market-based rate authority, with an accompanying rate tariff, noting that such application includes a request for blanket authorization, under 18 CFR part 34, of future issuances of securities and assumptions of liability.

Any person desiring to intervene or to protest should file with the Federal Energy Regulatory Commission, 888 First Street NE, Washington, DC 20426, in accordance with Rules 211 and 214 of the Commission's Rules of Practice and Procedure (18 CFR 385.211 and 385.214). Anyone filing a motion to intervene or protest must serve a copy of that document on the Applicant.

Notice is hereby given that the deadline for filing protests with regard to the applicant's request for blanket authorization, under 18 CFR part 34, of

future issuances of securities and assumptions of liability, is January 28, 2020.

The Commission encourages electronic submission of protests and interventions in lieu of paper, using the FERC Online links at *http://www.ferc.gov.* To facilitate electronic service, persons with internet access who will eFile a document and/or be listed as a contact for an intervenor must create and validate an eRegistration account using the eRegistration link. Select the eFiling link to log on and submit the intervention or protests.

Persons unable to file electronically should submit an original and 5 copies of the intervention or protest to the Federal Energy Regulatory Commission, 888 First Street NE, Washington, DC 20426.

The filings in the above-referenced proceeding are accessible in the Commission's eLibrary system by clicking on the appropriate link in the above list. They are also available for electronic review in the Commission's Public Reference Room in Washington, DC. There is an eSubscription link on the website that enables subscribers to receive email notification when a document is added to a subscribed docket(s). For assistance with any FERC Online service, please email *FERCOnlineSupport@ferc.gov,* or call (866) 208–3676 (toll free). For TTY, call (202) 502–8659.

Dated: January 8, 2020.

Nathaniel J. Davis, Sr.,

Deputy Secretary.

[FR Doc. 2020–00436 Filed 1–13–20; 8:45 am]

BILLING CODE 6717–01–P

DEPARTMENT OF ENERGY

Federal Energy Regulatory Commission

[Project No. 6841–005]

Rivanna Water and Sewer Authority; Notice of Application for Surrender of Exemption, Soliciting Comments, Motions To Intervene, and Protests

Take notice that the following hydroelectric application has been filed with the Commission and is available for public inspection:

a. Application Type: Application for surrender of exemption.

b. *Project No:* 6841–005.

c. *Date Filed:* December 6, 2019.

d. *Applicant:* Rivanna Water and Sewer Authority.

e. *Name of Project:* South Rivanna Hydroelectric Project.

f. *Location:* The 1,070-kilowatt project is located on the South Fork Rivanna River, near Charlottesville, Albemarle County, Virginia. The project does not occupy any federal lands.

g. *Filed Pursuant to:* Public Utility Regulatory Policies Act of 1978, 16 U.S.C. 2705, 2708.

h. *Applicant Contact:* Ms. Jennifer Whitaker, Rivanna Water and Sewer Authority, 695 Moores Creek Lane, Charlottesville, VA 22902–9016; phone (434) 977–2970, email *jwhitaker@rivanna.org.*

i. *FERC Contact:* Diana Shannon, (202) 502–6136, *diana.shannon@ferc.gov.*

j. *Deadline for filing comments, motions to intervene, and protests:* February 7, 2020.

The Commission strongly encourages electronic filing. Please file comments, motions to intervene, and protests using the Commission's eFiling system at *http://www.ferc.gov/docs-filing/efiling.asp.* Commenters can submit brief comments up to 6,000 characters, without prior registration, using the eComment system at *http://www.ferc.gov/docs-filing/ecomment.asp.* You must include your name and contact information at the end of your comments. For assistance, please contact FERC Online Support at *FERCOnlineSupport@ferc.gov,* (866) 208–3676 (toll free), or (202) 502–8659 (TTY). In lieu of electronic filing, please send a paper copy to: Secretary, Federal Energy Regulatory Commission, 888 First Street NE, Washington, DC 20426. The first page of any filing should include docket number P–6841–005. Comments emailed to Commission staff are not considered part of the Commission record.

The Commission's Rules of Practice and Procedure require all intervenors filing documents with the Commission to serve a copy of that document on each person whose name appears on the official service list for the project. Further, if an intervenor files comments or documents with the Commission relating to the merits of an issue that may affect the responsibilities of a particular resource agency, they must also serve a copy of the document on that resource agency.

k. *Description of Request:* Upon determining that rehabilitation and continued operation is no longer economically viable, the applicant proposes to surrender its exemption. Due to flooding damage, the project has not operated since June 2013. The applicant proposes to disconnect and remove all electrical components, as well as drain, clean, and disconnect all mechanical components. Downstream flows would continue to be released from the gate at the south operating tower of the dam. The dam and crib intake structure would remain in place to be used for municipal water supply. The powerhouse would also remain in place. No ground disturbance is proposed as part of the surrender.

l. *Locations of the Application:* A copy of the application is available for inspection and reproduction at the Commission's Public Reference Room, located at 888 First Street NE, Room 2A, Washington, DC 20426, or by calling (202) 502–8371. This filing may also be viewed on the Commission's website at *http://www.ferc.gov* using the ''eLibrary'' link. Enter the docket number excluding the last three digits in the docket number field to access the document. You may also register online at *http://www.ferc.gov/docs-filing/esubscription.asp* to be notified via email of new filings and issuances related to this or other pending projects. For assistance, call 1–866–208–3676 or email *FERCOnlineSupport@ferc.gov,* for TTY, call (202) 502–8659. A copy is also available for inspection and reproduction at the address in item (h) above. Agencies may obtain copies of the application directly from the applicant.

m. Individuals desiring to be included on the Commission's mailing list should so indicate by writing to the Secretary of the Commission.

n. *Comments, Protests, or Motions to Intervene:* Anyone may submit comments, a protest, or a motion to intervene in accordance with the requirements of Rules of Practice and Procedure, 18 CFR 385.210, .211, .214, respectively. In determining the appropriate action to take, the Commission will consider all protests or other comments filed, but only those who file a motion to intervene in accordance with the Commission's Rules may become a party to the proceeding. Any comments, protests, or motions to intervene must be received on or before the specified comment date for the particular application.

o. *Filing and Service of Documents:* Any filing must (1) bear in all capital letters the title ''COMMENTS'', ''PROTEST'', or ''MOTION TO INTERVENE'' as applicable; (2) set forth in the heading the name of the applicant and the project number of the application to which the filing responds; (3) furnish the name, address, and telephone number of the person commenting, protesting or intervening; and (4) otherwise comply with the requirements of 18 CFR 385.2001 through 385.2005. All comments, motions to intervene, or protests must

set forth their evidentiary basis. Any filing made by an intervenor must be accompanied by proof of service on all persons listed in the service list prepared by the Commission in this proceeding, in accordance with 18 CFR 385.2010.

Dated: January 8, 2020.

Kimberly D. Bose,

Secretary.

[FR Doc. 2020–00389 Filed 1–13–20; 8:45 am]

BILLING CODE 6717–01–P

DEPARTMENT OF ENERGY

Federal Energy Regulatory Commission

Combined Notice of Filings #1

Take notice that the Commission received the following electric corporate filings:

Docket Numbers: EC19–120–000.

Applicants: El Paso Electric Company, Sun Jupiter Holdings LLC.

Description: Response to December 5, 2019 Deficiency Letter of Sun Jupiter Holdings LLC, et al.

Filed Date: 1/6/20.

Accession Number: 20200106–5152.

Comments Due: 5 p.m. ET 1/27/20.

Take notice that the Commission received the following electric rate filings:

Docket Numbers: ER20–89–001.

Applicants: ISO New England Inc.

Description: Tariff Amendment: ISO–NE & NEPOOL; Response to Deficiency Notice re: Fuel Sec. Retention Limit to be effective 12/11/2019.

Filed Date: 1/6/20.

Accession Number: 20200106–5113.

Comments Due: 5 p.m. ET 1/27/20.

Docket Numbers: ER20–742–000.

Applicants: New York State Electric & Gas Corporation, New York Independent System Operator, Inc.

Description: § 205(d) Rate Filing: 205 re: E&P Agreement (SA2501) between NYSEG and Canisteo Wind Energy to be effective 12/31/2019.

Filed Date: 1/7/20.

Accession Number: 20200107–5046.

Comments Due: 5 p.m. ET 1/28/20.

The filings are accessible in the Commission's eLibrary system by clicking on the links or querying the docket number.

Any person desiring to intervene or protest in any of the above proceedings must file in accordance with Rules 211 and 214 of the Commission's Regulations (18 CFR 385.211 and 385.214) on or before 5:00 p.m. Eastern time on the specified comment date. Protests may be considered, but intervention is necessary to become a party to the proceeding.

eFiling is encouraged. More detailed information relating to filing requirements, interventions, protests, service, and qualifying facilities filings can be found at: *http://www.ferc.gov/docs-filing/efiling/filing-req.pdf.* For other information, call (866) 208–3676 (toll free). For TTY, call (202) 502–8659.

Dated: January 7, 2020.

Nathaniel J. Davis, Sr.,

Deputy Secretary.

[FR Doc. 2020–00349 Filed 1–13–20; 8:45 am]

BILLING CODE 6717–01–P

DEPARTMENT OF ENERGY

Federal Energy Regulatory Commission

Combined Notice of Filings

Take notice that the Commission has received the following Natural Gas Pipeline Rate and Refund Report filings:

Docket Numbers: RP20–396–000.

Applicants: Florida Gas Transmission Company, LLC.

Description: Annual Accounting Report of Florida Gas Transmission Company, LLC under RP20–396.

Filed Date: 12/31/19.

Accession Number: 20191231–5315.

Comments Due: 5 p.m. ET 1/13/20.

Docket Numbers: RP20–411–000.

Applicants: Millennium Pipeline Company, LLC.

Description: Compliance filing 2019 Penalty Revenue Crediting Report.

Filed Date: 1/6/20.

Accession Number: 20200106–5083.

Comments Due: 5 p.m. ET 1/20/20.

Docket Numbers: RP20–412–000.

Applicants: Enable Mississippi River Transmission, LLC.

Description: § 4(d) Rate Filing: Negotiated Rate Filing—City of Potosi RP18–923 & RP20–131 Settlement to be effective 1/1/2019.

Filed Date: 1/6/20.

Accession Number: 20200106–5138.

Comments Due: 5 p.m. ET 1/20/20.

Docket Numbers: RP20–413–000.

Applicants: Enable Mississippi River Transmission, LLC.

Description: § 4(d) Rate Filing: Negotiated Rate Filing—Village of Dupo RP18–923 & RP20–131 Settlement to be effective 1/1/2019.

Filed Date: 1/6/20.

Accession Number: 20200106–5140.

Comments Due: 5 p.m. ET 1/20/20.

The filings are accessible in the Commission's eLibrary system by clicking on the links or querying the docket number.

Any person desiring to intervene or protest in any of the above proceedings must file in accordance with Rules 211 and 214 of the Commission's Regulations (18 CFR 385.211 and 385.214) on or before 5:00 p.m. Eastern time on the specified date(s). Protests may be considered, but intervention is necessary to become a party to the proceeding.

eFiling is encouraged. More detailed information relating to filing requirements, interventions, protests, service, and qualifying facilities filings can be found at: *http://www.ferc.gov/docs-filing/efiling/filing-req.pdf.* For other information, call (866) 208–3676 (toll free). For TTY, call (202) 502–8659.

Dated: January 7, 2020.

Nathaniel J. Davis, Sr.,

Deputy Secretary.

[FR Doc. 2020–00351 Filed 1–13–20; 8:45 am]

BILLING CODE 6717–01–P

DEPARTMENT OF ENERGY

Federal Energy Regulatory Commission

[Docket No. IC20–2–000]

Commission Information Collection Activities (FERC–577); Comment Request; Extension

AGENCY: Federal Energy Regulatory Commission.

ACTION: Notice of information collection and request for comments.

SUMMARY: In compliance with the requirements of the Paperwork Reduction Act of 1995 (PRA), the Federal Energy Regulatory Commission (Commission or FERC) is soliciting public comment on the currently approved information collection, FERC-577 (Natural Gas Facilities: Environmental Review and Compliance) and submitting the information collection to the Office of Management and Budget (OMB) for review. Any interested person may file comments directly with OMB and should address a copy of those comments to the Commission as explained below.

DATES: Comments on the collection of information are due February 13, 2020.

ADDRESSES: Comments filed with OMB, identified by the OMB Control No. 1902–0128, should be sent via email to the Office of Information and Regulatory Affairs: *oira_submission@omb.gov*, Attention: Federal Energy Regulatory Commission Desk Officer.

A copy of the comments should also be sent to the Commission, in Docket

No. IC20–2–000, by either of the following methods:

• *eFiling at Commission's Website: http://www.ferc.gov/docs-filing/efiling.asp.*

• *Mail/Hand Delivery/Courier:* Federal Energy Regulatory Commission, Secretary of the Commission, 888 First Street NE, Washington, DC 20426.

Instructions: All submissions must be formatted and filed in accordance with submission guidelines at: *http://www.ferc.gov/help/submission-guide.asp.* For user assistance, contact FERC Online Support by email at *ferconlinesupport@ferc.gov,* or by phone at: (866) 208–3676 (toll-free), or (202) 502–8659 for TTY.

Docket: Users interested in receiving automatic notification of activity in this docket or in viewing/downloading comments and issuances in this docket may do so at *http://www.ferc.gov/docs-filing/docs-filing.asp.*

FOR FURTHER INFORMATION CONTACT: Ellen Brown may be reached by email at *DataClearance@FERC.gov,* telephone at (202) 502–8663, and fax at (202) 273–0873.

SUPPLEMENTARY INFORMATION:

Title: FERC–577, Natural Gas Facilities: Environmental Review and Compliance.

OMB Control No.: 1902–0128.

Type of Request: Three-year extension of the FERC–577 with no changes to the current reporting requirements.

Abstract: The FERC–577 contains the Commission's information collection pertaining to regulations which implement the National Environmental Policy Act (NEPA) as well as the reporting requirements for landowner notifications. These requirements are contained in 18 CFR parts 2, 157, 284, and 380. The information to be submitted includes draft environmental material in accordance with the provisions of Part 380 of FERC's regulations in order to implement the Commission's procedures under NEPA.

Without such information, the Commission would be unable to fulfill its statutory responsibilities under the Natural Gas Act (NGA), NEPA, and the Energy Policy Act of 2005. Specifically, these responsibilities include ensuring company activities remain consistent with the public interest, which is specified in the NGA and inherent in the other statutes.

Type of Respondents: Companies proposing Natural Gas Projects under section 7 and Jurisdictional Gas Pipeline and Storage Companies.

Estimate of Annual Burden.[1] The Commission estimates the annual public reporting burden and cost[2] for the information collection as follows.

FERC–577—NATURAL GAS FACILITIES: ENVIRONMENTAL REVIEW AND COMPLIANCE

	Number of respondents (1)	Number of responses per respondent (2)	Total number of responses (1) * (2) = (3)	Average burden hours & average cost per response ($) (rounded) (4)	Total annual burden hours & total annual cost ($) (rounded) (3) * (4) = (5)	Cost per respondent ($) (rounded) (5) ÷ (1) = (6)
Gas Pipeline Certificates[3].	101	16	1,616	193,518 hours; $15,481	312,725 hours; $25,018,007.	$247,703
Landowners Notification[4].	164	144	23,616	2 hours; $160	47,232 hours; $3,778,560.	23,040
Total			25,232		359,957 hours; $28,796,567.	

Comments: Comments are invited on: (1) Whether the collection of information is necessary for the proper performance of the functions of the Commission, including whether the information will have practical utility; (2) the accuracy of the agency's estimate of the burden and cost of the collection of information, including the validity of the methodology and assumptions used; (3) ways to enhance the quality, utility and clarity of the information collection; and (4) ways to minimize the burden of the collection of information on those who are to respond, including the use of automated collection techniques or other forms of information technology.

Dated: January 8, 2020.

Kimberly D. Bose,

Secretary.

[FR Doc. 2020–00385 Filed 1–13–20; 8:45 am]

BILLING CODE 6717–01–P

[1] Burden is defined as the total time, effort, or financial resources expended by persons to generate, maintain, retain, or disclose or provide information to or for a federal agency. See 5 CFR 1320 for additional information on the definition of information collection burden.

[2] The Commission staff estimates that industry is similarly situated in terms of hourly cost (for wages plus benefits). Based on the Commission's FY (Fiscal Year) 2019 average cost (for wages plus benefits), $80.00/hour is used.

[3] Requirements are found in 18 CFR parts 2, 157, and 380.

[4] Requirements are found in 18 CFR 157(d), 157(f), 2.55(a), 2.55(b), 284.11, and 380.15.

DEPARTMENT OF ENERGY

Federal Energy Regulatory Commission

Combined Notice of Filings #1

Take notice that the Commission received the following electric corporate filings:

Docket Numbers: EC20–29–000.

Applicants: Northeast Energy Associates, A Limited Partnership, North Jersey Energy Associates, A Limited Partnership, Vistra Energy Corp., NextEra Energy, Inc.

Description: Application for Authorization Under Section 203 of the Federal Power Act, et al. of Northeast Energy Associates, A Limited Partnership, et al.

Filed Date: 1/7/20.

Accession Number: 20200107–5110.

Comments Due: 5 p.m. ET 1/28/20.

Take notice that the Commission received the following electric rate filings:

Docket Numbers: ER13–2100–005; ER13–2109–009; ER13–434–007; ER16–1750–006; ER16–2601–004; ER17–2292–004; ER17–2381–003; ER19–1656–003.

Applicants: Virginia Electric and Power Company, Dominion Energy Generation Marketing, Inc., Fowler Ridge Wind Farm LLC, Summit Farms Solar, LLC, Southampton Solar, LLC, Scott-II Solar LLC, Wilkinson Solar LLC.

Description: Notice of Non-Material Change in Status of the Dominion Energy PJM Companies.

Filed Date: 1/7/20.

Accession Number: 20200107–5122.

Comments Due: 5 p.m. ET 1/28/20.

Docket Numbers: ER19–1501–001.

Applicants: Appalachian Power Company, PJM Interconnection, L.L.C.

Description: Compliance filing: PJM TOs submit revisions in compliance with the Commission's 12/19/2019 to be effective 4/22/2016.

Filed Date: 1/7/20.

Accession Number: 20200107–5108.

Comments Due: 5 p.m. ET 1/28/20.

Docket Numbers: ER20–743–000.

Applicants: Southern California Edison Company.

Description: § 205(d) Rate Filing: Amended Service Agreement Procter & Gamble Paper Products Company to be effective 1/1/2020.

Filed Date: 1/7/20.

Accession Number: 20200107–5099.

Comments Due: 5 p.m. ET 1/28/20.

Docket Numbers: ER20–744–000.

Applicants: Actual Energy, Inc.

Description: Baseline eTariff Filing: Market-Based Rate Tariff Application to be effective 1/8/2020.

Filed Date: 1/7/20.

Accession Number: 20200107–5100.

Comments Due: 5 p.m. ET 1/28/20.

Docket Numbers: ER20–745–000.

Applicants: PacifiCorp.

Description: § 205(d) Rate Filing: Calpine NITSA Rev 13 to be effective 1/1/2020.

Filed Date: 1/7/20.

Accession Number: 20200107–5101.

Comments Due: 5 p.m. ET 1/28/20.

Docket Numbers: ER20–746–000.

Applicants: Arizona Public Service Company.

Description: § 205(d) Rate Filing: Service Agreement No. 375 Papago LLC to be effective 12/23/2019.

Filed Date: 1/7/20.

Accession Number: 20200107–5102.

Comments Due: 5 p.m. ET 1/28/20.

Docket Numbers: ER20–747–000.

Applicants: PJM Interconnection, L.L.C.

Description: Tariff Cancellation: Notice of Cancellation of Service Agreement No. 3466, Queue No. NQ77 to be effective 3/14/2020.

Filed Date: 1/7/20.

Accession Number: 20200107–5103.

Comments Due: 5 p.m. ET 1/28/20.

Docket Numbers: ER20–748–000.

Applicants: Arizona Public Service Company.

Description: § 205(d) Rate Filing: Service Agreement Nos. 367 and 376 to be effective 12/9/2019.

Filed Date: 1/7/20.

Accession Number: 20200107–5104.

Comments Due: 5 p.m. ET 1/28/20.

Docket Numbers: ER20–749–000.

Applicants: AEP Texas Inc.

Description: § 205(d) Rate Filing: AEPTX-Woodward Mountain Wind GIA 3rd Amended and Restated to be effective 12/19/2019.

Filed Date: 1/7/20.

Accession Number: 20200107–5106.

Comments Due: 5 p.m. ET 1/28/20.

Docket Numbers: ER20–750–000.

Applicants: Dominion Energy South Carolina, Inc.

Description: Late-Filed Borderline Agreement, et al. of Dominion Energy South Carolina, Inc.

Filed Date: 1/7/20.

Accession Number: 20200107–5119.

Comments Due: 5 p.m. ET 1/28/20.

Docket Numbers: ER20–751–000.

Applicants: El Paso Electric Company.

Description: § 205(d) Rate Filing: Service Agreement No. 327, Short-Term Conditional Firm PTP Agreement with EDF to be effective 3/9/2020.

Filed Date: 1/8/20.

Accession Number: 20200108–5062.

Comments Due: 5 p.m. ET 1/29/20.

The filings are accessible in the Commission's eLibrary system by clicking on the links or querying the docket number.

Any person desiring to intervene or protest in any of the above proceedings must file in accordance with Rules 211 and 214 of the Commission's Regulations (18 CFR 385.211 and 385.214) on or before 5:00 p.m. Eastern time on the specified comment date. Protests may be considered, but intervention is necessary to become a party to the proceeding.

eFiling is encouraged. More detailed information relating to filing requirements, interventions, protests, service, and qualifying facilities filings can be found at: *http://www.ferc.gov/docs-filing/efiling/filing-req.pdf.* For other information, call (866) 208–3676 (toll free). For TTY, call (202) 502–8659.

Dated: January 8, 2020.

Nathaniel J. Davis, Sr.,

Deputy Secretary.

[FR Doc. 2020–00439 Filed 1–13–20; 8:45 am]

BILLING CODE 6717–01–P

DEPARTMENT OF ENERGY

Federal Energy Regulatory Commission

[Project No. 1971–079]

Idaho Power Company; Notice of Offer of Settlement

Take notice that the following offer of settlement has been filed with the Commission and is available for public inspection.

a. *Type of Application:* Offer of Settlement.

b. *Project No.:* 1971–079.

c. *Date Filed:* December 30, 2019.

d. *Applicant:* Idaho Power Company.

e. *Name of Project:* Hells Canyon Hydropower Project.

f. *Location:* On the Snake River in Washington and Adams, Counties, Idaho; and Wallowa and Baker Counties, Oregon. The project occupies federal lands administered by the Forest Service and the Bureau of Land Management (Payette and Wallowa-Whitman National Forests and Hells Canyon National Recreational Area).

g. *Filed Pursuant to:* Rule 602 of the Commission's Rules of Practice and Procedure, 18 CFR 385.602.

h. *Applicant Contact:* Brett Dumas Director, Environmental Affairs, Idaho Power Company, P.O. Box 70, Boise, Idaho 83707.

i. *FERC Contact:* Alan Mitchnick, (202) 502–6074, *alan.mitchnick@ferc.gov.*

j. Idaho Power Company filed an Offer of Settlement on behalf of itself and signatories of a Stipulation and Implementation Agreement (SIA) between Idaho Power; the State of Oregon, by and through the Office of the Governor, the Oregon Department of Environmental Quality, and Oregon Department of Fish and Wildlife; and the State of Idaho, by and through the Office of the Governor, the Idaho Department of Environmental Quality, and the Idaho Department of Fish and Game (Parties). The SIA, which became effective on April 22, 2019, resolves, among other disagreements among the Parties, the disagreement between the States related to spring Chinook salmon and summer steelhead fish passage and reintroduction within the context of the Clean Water Act section 401 certifications.

Idaho Power, on behalf of the Parties to the SIA, requests that the Commission issue a new license for the project that incorporates the proposed license articles set forth in Appendix A of the Offer of Settlement Explanatory Statement, without material modification. The conditions involve upstream adult fish collection at Hells Canyon Dam; Pine Creek placement, monitoring, and juvenile collection program; and mid-license term fish placement evaluation report and recommendation.

k. A copy of the Offer of Settlement is available for review on the Commission's website at *http://www.ferc.gov* using the ''eLibrary'' link. Enter the docket number, excluding the last three digits, in the docket number field to access the document. For assistance, contact FERC Online Support.

l. *Deadline for filing comments:* Comments on the Offer of Settlement

are due February 6, 2020. Reply comments are due February 26, 2020.

The Commission strongly encourages electronic filing. Please file comments using the Commission's eFiling system at *http://www.ferc.gov/docs-filing/efiling.asp.* Commenters can submit brief comments up to 6,000 characters, without prior registration, using the eComment system at *http://www.ferc.gov/docs-filing/ecomment.asp.* You must include your name and contact information at the end of your comments. For assistance, please contact FERC Online Support at *FERCOnlineSupport@ferc.gov,* (866) 208–3676 (toll free), or (202) 502–8659 (TTY). In lieu of electronic filing, please send a paper copy to: Secretary, Federal Energy Regulatory Commission, 888 First Street NE, Washington, DC 20426. The first page of any filing should include docket number P–1971–079.

Register online at *http://www.ferc.gov/docs-filing/esubscription.asp* to be notified via email of new filings and issuances related to this or other pending projects. For assistance, contact FERC Online Support.

Dated: January 7, 2020.

Kimberly D. Bose,

Secretary.

[FR Doc. 2020–00345 Filed 1–13–20; 8:45 am]

BILLING CODE 6717–01–P

DEPARTMENT OF ENERGY

Federal Energy Regulatory Commission

[Docket No. RM98–1–000]

Records Governing Off-the-Record Communications; Public Notice

This constitutes notice, in accordance with 18 CFR 385.2201(b), of the receipt of prohibited and exempt off-the-record communications.

Order No. 607 (64 FR 51222, September 22, 1999) requires Commission decisional employees, who make or receive a prohibited or exempt off-the-record communication relevant to the merits of a contested proceeding, to deliver to the Secretary of the Commission, a copy of the communication, if written, or a summary of the substance of any oral communication.

Prohibited communications are included in a public, non-decisional file associated with, but not a part of, the decisional record of the proceeding. Unless the Commission determines that the prohibited communication and any responses thereto should become a part of the decisional record, the prohibited off-the-record communication will not be considered by the Commission in reaching its decision. Parties to a proceeding may seek the opportunity to respond to any facts or contentions made in a prohibited off-the-record communication, and may request that the Commission place the prohibited communication and responses thereto in the decisional record. The Commission will grant such a request only when it determines that fairness so requires. Any person identified below as having made a prohibited off-the-record communication shall serve the document on all parties listed on the official service list for the applicable proceeding in accordance with Rule 2010, 18 CFR 385.2010.

Exempt off-the-record communications are included in the decisional record of the proceeding, unless the communication was with a cooperating agency as described by 40 CFR 1501.6, made under 18 CFR 385.2201(e)(1)(v).

The following is a list of off-the-record communications recently received by the Secretary of the Commission. The communications listed are grouped by docket numbers in ascending order. These filings are available for electronic review at the Commission in the Public Reference Room or may be viewed on the Commission's website at *http://www.ferc.gov* using the eLibrary link. Enter the docket number, excluding the last three digits, in the docket number field to access the document. For assistance, please contact FERC Online Support at *FERCOnlineSupport@ferc.gov* or toll free at (866) 208–3676, or for TTY, contact (202) 502–8659.

Docket No.	File date	Presenter or requester
Prohibited:		
NONE.		
Exempt:		
P–5737–000	12–18–2019	U.S. Congress.[1]

[1] U.S. Congresswoman Zoe Lofgren, Anna G. Eshoo, U.S. Congressman Jimmy Panetta, and Ro Khanna.

Dated: January 8, 2020.

Nathaniel J. Davis, Sr.,

Deputy Secretary.

[FR Doc. 2020–00434 Filed 1–13–20; 8:45 am]

BILLING CODE 6717–01–P

DEPARTMENT OF ENERGY

Federal Energy Regulatory Commission

[Project No. 12557–013]

JG Royal Mill, LLC and JJH Royal Mill, LLC; Notice of Application for Surrender of Exemption, Soliciting Comments, Motions To Intervene, and Protests

Take notice that the following hydroelectric application has been filed with the Commission and is available for public inspection:

a. *Application Type:* Application for surrender of exemption.

b. *Project No:* 12557–013.

c. *Date Filed:* November 25, 2019.

d. *Applicant:* JG Royal Mill, LLC and JJH Royal Mill, LLC.

e. *Name of Project:* Royal Mills Hydroelectric Project.

f. *Location:* The 225-kilowatt project is located on the South Branch of the Pawtuxet River in West Warwick, Kent County, Rhode Island. The project does not occupy any federal lands.

g. *Filed Pursuant to:* Public Utility Regulatory Policies Act of 1978, 16 U.S.C. 2705, 2708.

h. *Applicant Contact:* John Geraghty, Geraghty Associates, Inc. P.O. Box 52, Readville, MA 02137; phone (617) 872–5787, email *geraghty234@gmail.com.*

i. *FERC Contact:* Diana Shannon, (202) 502–6136, *diana.shannon@ferc.gov*.

j. *Deadline for filing comments, motions to intervene, and protests:* February 7, 2020.

The Commission strongly encourages electronic filing. Please file comments, motions to intervene, and protests using the Commission's eFiling system at *http://www.ferc.gov/docs-filing/efiling.asp*. Commenters can submit brief comments up to 6,000 characters, without prior registration, using the eComment system at *http://www.ferc.gov/docs-filing/ecomment.asp*. You must include your name and contact information at the end of your comments. For assistance, please contact FERC Online Support at *FERCOnlineSupport@ferc.gov,* (866) 208–3676 (toll free), or (202) 502–8659 (TTY). In lieu of electronic filing, please send a paper copy to: Secretary, Federal Energy Regulatory Commission, 888 First Street NE, Washington, DC 20426. The first page of any filing should include docket number P–12557–013. Comments emailed to Commission staff are not considered part of the Commission record.

The Commission's Rules of Practice and Procedure require all intervenors filing documents with the Commission to serve a copy of that document on each person whose name appears on the official service list for the project. Further, if an intervenor files comments or documents with the Commission relating to the merits of an issue that may affect the responsibilities of a particular resource agency, they must also serve a copy of the document on that resource agency.

k. *Description of Request:* The applicant proposes to surrender its exemption for the project. The project has not operated since April 2017. No ground disturbing activities are proposed and project features would remain in place, as they are part of the historical Royal Mills Complex. The applicant proposes to ensure a minimum continuous flow through the canal and tailrace, pass all other flow over the dam, remove appurtenant equipment from the powerhouse, and secure the site.

l. *Locations of the Application:* A copy of the application is available for inspection and reproduction at the Commission's Public Reference Room, located at 888 First Street NE, Room 2A, Washington, DC 20426, or by calling (202) 502–8371. This filing may also be viewed on the Commission's website at *http://www.ferc.gov* using the ''eLibrary'' link. Enter the docket number excluding the last three digits in the docket number field to access the document. You may also register online at *http://www.ferc.gov/docs-filing/esubscription.asp* to be notified via email of new filings and issuances related to this or other pending projects. For assistance, call 1–866–208–3676 or email *FERCOnlineSupport@ferc.gov,* for TTY, call (202) 502–8659. A copy is also available for inspection and reproduction at the address in item (h) above. Agencies may obtain copies of the application directly from the applicant.

m. Individuals desiring to be included on the Commission's mailing list should so indicate by writing to the Secretary of the Commission.

n. *Comments, Protests, or Motions to Intervene:* Anyone may submit comments, a protest, or a motion to intervene in accordance with the requirements of Rules of Practice and Procedure, 18 CFR 385.210, .211, .214, respectively. In determining the appropriate action to take, the Commission will consider all protests or other comments filed, but only those who file a motion to intervene in accordance with the Commission's Rules may become a party to the proceeding. Any comments, protests, or motions to intervene must be received on or before the specified comment date for the particular application.

o. *Filing and Service of Documents:* Any filing must (1) bear in all capital letters the title ''COMMENTS'', ''PROTEST'', or ''MOTION TO INTERVENE'' as applicable; (2) set forth in the heading the name of the applicant and the project number of the application to which the filing responds; (3) furnish the name, address, and telephone number of the person commenting, protesting or intervening; and (4) otherwise comply with the requirements of 18 CFR 385.2001 through 385.2005. All comments, motions to intervene, or protests must set forth their evidentiary basis. Any filing made by an intervenor must be accompanied by proof of service on all persons listed in the service list prepared by the Commission in this proceeding, in accordance with 18 CFR 385.2010.

Dated: January 8, 2020.

Kimberly D. Bose,

Secretary.

[FR Doc. 2020–00386 Filed 1–13–20; 8:45 am]

BILLING CODE 6717–01–P

DEPARTMENT OF ENERGY

Federal Energy Regulatory Commission

Notice of Commission Half-Day Closing

Due to inclement and worsening weather conditions, the Commission is closing at 1:00 p.m. today. The emergency closing provisions as set forth in section 385.2007 of the Commission's Rules, 18 CFR 385.2007 (2019), which states that filings and documents due to be filed on Tuesday, January 7, 2020, will be accepted as timely on the next official business day.

Dated: January 7, 2020.

Kimberly D. Bose,

Secretary.

[FR Doc. 2020–00344 Filed 1–13–20; 8:45 am]

BILLING CODE 6717–01–P

FEDERAL COMMUNICATIONS COMMISSION

[OMB 3060–0882; FRS 16407]

Information Collection Being Reviewed by the Federal Communications Commission Under Delegated Authority

AGENCY: Federal Communications Commission.

ACTION: Notice and request for comments.

SUMMARY: As part of its continuing effort to reduce paperwork burdens, and as required by the Paperwork Reduction Act of 1995 (PRA), the Federal Communications Commission (FCC or Commission) invites the general public and other Federal agencies to take this opportunity to comment on the following information collections. Comments are requested concerning: Whether the proposed collection of information is necessary for the proper performance of the functions of the Commission, including whether the information shall have practical utility; the accuracy of the Commission's burden estimate; ways to enhance the quality, utility, and clarity of the information collected; ways to minimize the burden of the collection of information on the respondents, including the use of automated collection techniques or other forms of information technology; and ways to further reduce the information collection burden on small business concerns with fewer than 25 employees.

The FCC may not conduct or sponsor a collection of information unless it displays a currently valid Office of

Management and Budget (OMB) control number. No person shall be subject to any penalty for failing to comply with a collection of information subject to the PRA that does not display a valid OMB control number.

DATES: Written comments should be submitted on or before March 16, 2020. If you anticipate that you will be submitting comments but find it difficult to do so within the period of time allowed by this notice, you should advise the contacts below as soon as possible.

ADDRESSES: Direct all PRA comments to Cathy Williams, FCC, via email: *PRA@fcc.gov* and to *Cathy.Williams@fcc.gov.*

FOR FURTHER INFORMATION CONTACT: For additional information about the information collection, contact Cathy Williams at (202) 418–2918.

SUPPLEMENTARY INFORMATION:

OMB Control No.: 3060–0882.

Title: Section 95.833, Construction requirements.

Form No.: Not applicable.

Type of Review: Extension of a currently approved collection.

Respondents: Business or other for-profit entities.

Number of Respondents and Responses: 5 respondents and 5 responses.

Estimated Time per Response: 1 hour.

Frequency of Response: Every 10 year reporting requirement.

Obligation to Respond: Required to obtain or retain benefits. The statutory authority for this collection is contained in 47 U.S.C. 154 and 303.

Total Annual Burden: 4 hours.

Annual Cost Burden: $1,000.

Nature and Extent of Confidentiality: There is no need with confidentiality with this collection of information.

Privacy Act Impact Assessment: No impact(s).

Needs and Uses: 218–219 MHz service system licensees are required to file a report after 10 years of license grant to demonstrate that they provide substantial service to its service areas. This information is examined by the Commission to assess whether or not licensees are in compliance with 218–219 MHz service system construction requirements which is covered under 47 CFR 95.833. Without this information, the Commission would not be able to carry out its statutory responsibilities.

Federal Communications Commission.

Cecilia Sigmund,

Federal Register Liaison Officer, Office of the Secretary.

[FR Doc. 2020–00429 Filed 1–13–20; 8:45 am]

BILLING CODE 6712–01–P

FEDERAL COMMUNICATIONS COMMISSION

[OMB 3060–0291; FRS 16406]

Information Collection Being Reviewed by the Federal Communications Commission Under Delegated Authority

AGENCY: Federal Communications Commission.

ACTION: Notice and request for comments.

SUMMARY: As part of its continuing effort to reduce paperwork burdens, and as required by the Paperwork Reduction Act of 1995 (PRA), the Federal Communications Commission (FCC or Commission) invites the general public and other Federal agencies to take this opportunity to comment on the following information collections. Comments are requested concerning: Whether the proposed collection of information is necessary for the proper performance of the functions of the Commission, including whether the information shall have practical utility; the accuracy of the Commission's burden estimate; ways to enhance the quality, utility, and clarity of the information collected; ways to minimize the burden of the collection of information on the respondents, including the use of automated collection techniques or other forms of information technology; and ways to further reduce the information collection burden on small business concerns with fewer than 25 employees. The FCC may not conduct or sponsor a collection of information unless it displays a currently valid Office of Management and Budget (OMB) control number. No person shall be subject to any penalty for failing to comply with a collection of information subject to the PRA that does not display a valid OMB control number.

DATES: Written comments should be submitted on or before March 16, 2020. If you anticipate that you will be submitting comments but find it difficult to do so within the period of time allowed by this notice, you should advise the contacts below as soon as possible.

ADDRESSES: Direct all PRA comments to Cathy Williams, FCC, via email: *PRA@fcc.gov* and to *Cathy.Williams@fcc.gov.*

FOR FURTHER INFORMATION CONTACT: For additional information about the information collection, contact Cathy Williams at (202) 418–2918.

SUPPLEMENTARY INFORMATION:

OMB Control Number: 3060–0291.

Title: Section 90.477(a), (b)(2), (d)(2), and (d)(3), Interconnected Systems.

Form No.: N/A.

Type of Review: Extension of a currently approved collection.

Respondents: Business or other for-profit, not-for-profit institutions and state, local or tribal government.

Number of Respondents: 527 respondents; 527 responses.

Estimated Time per Response: .25 hours–2 hours.

Frequency of Response: On occasion reporting requirement, recordkeeping requirement and third party disclosure requirement.

Obligation To Respond: Required to obtain or retain benefits. Statutory authority for this information collection is contained in 47 U.S.C. 332(a).

Total Annual Burden: 176 hours.

Total Annual Cost: None.

Privacy Act Impact Assessment: No impact(s).

Nature and Extent of Confidentiality: There is no need for confidentiality with this collection of information.

Needs and Uses: The information collection requirements which govern interconnection of private land mobile radio service stations with the public switched telephone network are contained in 47 CFR 90.477(a) which requires that licensees of interconnected land stations maintain as part of their station records a detailed description of how interconnection is accomplished. The information collection requirements contained in 47 CFR 90.477(b)(2) and (d)(2) require that at least one licensee participating in any cost sharing arrangement for telephone service must maintain cost sharing records, the costs must be distributed at least once a year, and a report of the distribution must be placed in the licensee's station records and made available to participants in the sharing arrangement and the Commission upon request. The information collection requirements contained in 47 CFR 90.477(d)(3) require that licensees in the Industrial/Business Pool and those licensees who establish eligibility pursuant to 90.20(a)(2), other than persons or organizations charged with specific fire protection activities, persons or organizations charged with specific forestry-conservation activities, or medical emergency systems in the 450–470 MHz band, and who seek to connect within 120 km (75 miles) of 25 cities specified in 90.477(d)(3), must obtain the consent of all co-channel licensees located both within 120 km of the center of the city, and with 120 km of the interconnected base station transmitter. Consensual agreements must specifically state the terms agreed upon

and a statement must be submitted to the Commission indicating that all co-channel licensees have consented to the use of interconnection.

In a December 1998 Report and Order in WT Docket Nos. 98–20 and 96–188, the Commission consolidated, revised and streamlined the Commission's rules governing the licensing application procedures for radio services licensed by the Commission's Wireless Telecommunications Bureau in order to fully implement the Universal Licensing System (ULS). As a result of the ULS rule conversions in connection with this information collection requirements contained in 47 CFR 90.477(a), interconnected systems now file all information (100 percent). Section 90.477(d)(3), interconnected systems were changed to reflect NAD83 coordinates.

Federal Communications Commission.

Marlene Dortch,

Secretary, Office of the Secretary.

[FR Doc. 2020–00333 Filed 1–13–20; 8:45 am]

BILLING CODE 6712–01–P

FEDERAL DEPOSIT INSURANCE CORPORATION

[3064–ZA12]

Notice of Inflation Adjustments for Civil Money Penalties

AGENCY: Federal Deposit Insurance Corporation.

ACTION: Notice of monetary penalties 2020.

SUMMARY: The Federal Deposit Insurance Corporation is providing notice of its maximum civil money penalties as adjusted for inflation.

DATES: The adjusted maximum amounts of civil money penalties in this notice are applicable to penalties assessed after January 15, 2020, for conduct occurring on or after November 2, 2015.

FOR FURTHER INFORMATION CONTACT: Graham N. Rehrig, Senior Attorney, Legal Division, (202) 898–3829, *grehrig@fdic.gov;* or Amanda E. Ledig, Honors Attorney, Legal Division, (202) 898–6663, *aledig@fdic.gov;* Federal Deposit Insurance Corporation, 550 17th Street NW, Washington, DC 20429.

SUPPLEMENTARY INFORMATION: This notice announces changes to the maximum amount of each civil money penalty (CMP) within the Federal Deposit Insurance Corporation's (FDIC) jurisdiction to administer to account for inflation under the Federal Civil Penalties Inflation Adjustment Act of 1990 (1990 Adjustment Act),[1] as amended by the Federal Civil Penalties Inflation Adjustment Act Improvements Act of 2015 (2015 Adjustment Act).[2] Under the 1990 Adjustment Act, as amended, federal agencies must make annual adjustments to the maximum amount of each CMP the agency administers. The Office of Management and Budget (OMB) is required to issue guidance to federal agencies no later than December 15 of each year providing an inflation-adjustment multiplier (*i.e.,* the inflation-adjustment factor agencies must use) applicable to CMPs assessed in the following year.

Agencies are required to publish their CMPs, adjusted under the multiplier provided by the OMB, by January 15 of the applicable year. Agencies, like the FDIC, that have codified the statutory formula for making the CMP adjustments may make annual inflation adjustments by providing notice in the **Federal Register**.[3]

On December 16, 2019, the OMB issued guidance to affected agencies on implementing the required annual adjustment, which guidance included the relevant inflation multiplier.[4] The FDIC has applied that multiplier to the maximum CMPs allowable in 2019 for FDIC-supervised institutions to calculate the maximum amount of CMPs that may be assessed by the FDIC in 2020.[5] There were no new statutory CMPs administered by the FDIC during 2019.

The following charts provide the inflation-adjusted maximum CMP amounts for use after January 15, 2020—the effective date of the 2020 annual adjustments—under 12 CFR part 308, for conduct occurring on or after November 2, 2015:

[1] Public Law 101–410, 104 Stat. 890, codified at 28 U.S.C. 2461 note.

[2] Public Law 114–74, 701(b), 129 Stat. 599, codified at 28 U.S.C. 2461 note.

[3] *See* Office of Mgmt. & Budget, Exec. Office of the President, OMB Memorandum No. M–20–05, *Implementation of Penalty Inflation Adjustments for 2020, Pursuant to the Federal Civil Penalties Inflation Adjustment Act Improvements Act of 2015* 4 (2019), *https://www.whitehouse.gov/wp-content/uploads/2019/12/M-20-05.pdf* (''OMB Guidance''); *see also* 12 CFR 308.132(d) (FDIC regulation that guides readers to the **Federal Register** to see the annual notice of CMP inflation adjustments).

[4] *See* OMB Guidance at 1 (providing an inflation multiplier of 1.01764).

[5] Penalties assessed for violations occurring prior to November 2, 2015, will be subject to the maximum amounts set forth in the FDIC's regulations in effect prior to the enactment of the 2015 Adjustment Act.

MAXIMUM CIVIL MONEY PENALTY AMOUNTS

U.S. Code citation	Current maximum CMP (through January 14, 2020)	Adjusted maximum CMP [6] (beginning January 15, 2020)
12 U.S.C. 1464(v)		
Tier One CMP [7]	$4,027	$4,098
Tier Two CMP	40,269	40,979
Tier Three CMP [8]	2,013,399	2,048,915
12 U.S.C. 1467(d)	10,067	10,245
12 U.S.C. 1817(a)		
Tier One CMP [9]	4,027	4,098
Tier Two CMP	40,269	40,979
Tier Three CMP [10]	2,013,399	2,048,915
12 U.S.C. 1817(c)		
Tier One CMP	3,682	3,747
Tier Two CMP	36,809	37,458
Tier Three CMP [11]	1,840,491	1,872,957
12 U.S.C. 1817(j)(16)		
Tier One CMP	10,067	10,245
Tier Two CMP	50,334	51,222
Tier Three CMP [12]	2,013,399	2,048,915
12 U.S.C. 1818(i)(2) [13]		
Tier One CMP	10,067	10,245
Tier Two CMP	50,334	51,222
Tier Three CMP [14]	2,013,399	2,048,915
12 U.S.C. 1820(e)(4)	9,203	9,365
12 U.S.C. 1820(k)(6)	331,174	337,016
12 U.S.C. 1828(a)(3)	125	127
12 U.S.C. 1828(h) [15]		
For assessments <10,000	125	127
12 U.S.C. 1829b(j)	21,039	21,410
12 U.S.C. 1832(c)	2,924	2,976
12 U.S.C. 1884	292	297
12 U.S.C. 1972(2)(F)		
Tier One CMP	10,067	10,245
Tier Two CMP	50,334	51,222
Tier Three CMP [16]	2,013,399	2,048,915
12 U.S.C. 3909(d)	2,505	2,549
15 U.S.C. 78u–2		
Tier One CMP (individuals)	9,472	9,639
Tier One CMP (others)	94,713	96,384
Tier Two CMP (individuals)	94,713	96,384
Tier Two CMP (others)	473,566	481,920
Tier Three CMP (individuals)	189,427	192,768
Tier Three CMP (others)	947,130	963,837
15 U.S.C. 1639e(k)		
First violation	11,563	11,767
Subsequent violations	23,125	23,533
31 U.S.C. 3802	11,463	11,665
42 U.S.C. 4012a(f)	2,187	2,226

CFR citation	Current presumptive CMP (through January 14, 2020)	Adjusted presumptive CMP (beginning January 15, 2020)
12 CFR 308.132(e)(1)(i).		
Institutions with $25 million or more in assets.		
1 to 15 days late	$552	$562
16 or more days late	1,105	1,124
Institutions with less than $25 million in assets.		
1 to 15 days late [17]	185	188
16 or more days late [18]	368	374
12 CFR 308.132(e)(1)(ii).		
Institutions with $25 million or more in assets.		
1 to 15 days late	920	936
16 or more days late	1,840	1,872
Institutions with less than $25 million in assets.		
1 to 15 days late	1/50,000th of the institution's total assets	

CFR citation	Current presumptive CMP (through January 14, 2020)	Adjusted presumptive CMP (beginning January 15, 2020)
16 or more days late	1/25,000th of the institution's total assets	
12 CFR 308.132(e)(2)	40,269	40,979
12 CFR 308.132(e)(3)		
Tier One CMP	4,027	4,098
Tier Two CMP	40,269	40,979
Tier Three CMP [19]	2,013,399	2,048,915

Dated at Washington, DC, on January 7, 2020.

Federal Deposit Insurance Corporation.

Annmarie H. Boyd,

Assistant Executive Secretary.

[FR Doc. 2020–00217 Filed 1–13–20; 8:45 am]

BILLING CODE P

FEDERAL DEPOSIT INSURANCE CORPORATION

Agency Information Collection Activities: Submission for OMB Review; Comment Request Re: Information Collection for Innovation Pilot Programs (NEW)

AGENCY: Federal Deposit Insurance Corporation (FDIC).

ACTION: Notice and request for comment.

SUMMARY: The FDIC seeks to continue its engagement and collaboration with innovators in the financial, non-financial, and technology sectors to, among other things, identify, develop and promote technology-driven innovations among community and other banks in a manner that ensures the safety and soundness of FDIC-supervised and insured institutions. An innovation pilot program framework can provide a regulatory environment in which the FDIC, in conjunction with individual proposals collected from innovators, including banks, will provide tailored regulatory and supervisory assistance, when appropriate, to facilitate the testing of innovative and advanced technologies, products, services, systems, or activities. On November 6, 2019, the FDIC requested comment for 60 days from the general public, including persons who may have an interest in participating in innovation pilot programs, and other Federal agencies, on the agency's collection of pilot program proposals by innovators, as required by the Paperwork Reduction Act of 1995 (PRA). The FDIC received no comments. The FDIC hereby gives notice of its plan to submit to the Office of Management and Budget (OMB) a request to approve this collection, and again invites comment on this new information collection request.

DATES: Comments must be submitted on or before February 13, 2020.

ADDRESSES: Interested parties are invited to submit written comments to the FDIC by any of the following methods:

- *https://www.FDIC.gov/regulations/laws/federal/notices.html.*
- *https://www.regulations.gov.*
- *Email: comments@fdic.gov.* Include the name of the collection in the subject line of the message.
- *Mail:* Jennifer Jones, Counsel, MB–3105, Federal Deposit Insurance Corporation, 550 17th Street NW, Washington, DC 20429.
- *Hand Delivery:* Comments may be hand-delivered to the guard station at the rear of the above address located on F Street NW, on business days between 7:00 a.m. and 5:00 p.m., EST.

All comments should reference ''Information Collection for Innovation Pilot Programs.'' A copy of the comments may also be submitted to the OMB desk officer for the FDIC: Office of Information and Regulatory Affairs, Office of Management and Budget, New Executive Office Building, Washington, DC 20503.

FOR FURTHER INFORMATION CONTACT: Jennifer Jones, at the FDIC mailing address above or by phone at 202–898–6768.

SUPPLEMENTARY INFORMATION: On November 6, 2019, the FDIC requested comment for 60 days from the general public, including persons who may have an interest in participating in innovation pilot programs, and other Federal agencies, on the agency's collection of pilot program proposals by innovators, as required by the PRA. The FDIC received no comments. The FDIC hereby gives notice of its plan to submit to OMB a request to approve this collection, and again invites comment on this new information collection request.

[6] The maximum penalty amount is per day, unless otherwise indicated.

[7] 12 U.S.C. 1464(v) provides the maximum CMP amounts for the late filing of certain Call Reports. In 2012, however, the FDIC issued regulations that further subdivided these amounts based upon the size of the institution and the lateness of the filing. *See* 77 FR 74573, 74576–78 (Dec. 17, 2012), codified at 12 CFR 308.132(e)(1). These adjusted subdivided amounts are found at the end of this chart.

[8] The maximum penalty amount for an institution is the lesser of this amount or 1 percent of total assets.

[9] 12 U.S.C. 1817(a) provides the maximum CMP amounts for the late filing of certain Call Reports. In 1991, however, the FDIC issued regulations that further subdivided these amounts based upon the size of the institution and the lateness of the filing. *See* 56 FR 37968, 37992–93 (Aug. 9, 1991), codified at 12 CFR 308.132(e)(1). These adjusted subdivided amounts are found at the end of this chart.

[10] The maximum penalty amount for an institution is the lesser of this amount or 1 percent of total assets.

[11] The maximum penalty amount for an institution is the lesser of this amount or 1 percent of total assets.

[12] The maximum penalty amount for an institution is the lesser of this amount or 1 percent of total assets.

[13] These amounts also apply to CMPs in statutes that cross-reference 12 U.S.C. 1818, such as 12 U.S.C. 2601, 2804(b), 3108(b), 3349(b), 4009(a), 4309(a), 4717(b); 15 U.S.C. 1607(a), 1681s(b), 1691(b), 1691c(a), 1693*o*(a); and 42 U.S.C. 3601.

[14] The maximum penalty amount for an institution is the lesser of this amount or 1 percent of total assets.

[15] The $122-per-day maximum CMP under 12 U.S.C. 1828(h), for failure or refusal to pay any assessment, applies only when the assessment is less than $10,000. When the amount of the assessment is $10,000 or more, the maximum CMP under section 1828(h) is 1 percent of the amount of the assessment for each day that the failure or refusal continues.

[16] The maximum penalty amount for an institution is the lesser of this amount or 1 percent of total assets.

[17] The maximum penalty amount for an institution is the greater of this amount or 1/100,000th of the institution's total assets.

[18] The maximum penalty amount for an institution is the greater of this amount or 1/50,000th of the institution's total assets.

[19] The maximum penalty amount for an institution is the lesser of this amount or 1 percent of total assets.

Time: 1. *Title:* Information Collection for Innovation Pilot Programs.

OMB Number: 3064–NEW.

Form Number: None.

Affected Public: FDIC-supervised institutions (state-chartered banks and savings institutions that are not members of the Federal Reserve System) and innovative companies that partner or plan to partner, or provide services to such institutions.

Estimated Number of Respondents: 50.

Estimated Total Annual Burden: 3,000 hours.

General Description of Collection: The FDIC seeks to engage and collaborate with innovators in the financial, non-financial, and technology sectors to, among other things, identify, develop and promote technology-driven innovations among community and other banks in a manner that ensures the safety and soundness of FDIC-supervised and insured institutions. An innovation pilot program framework will provide a regulatory environment in which the FDIC, in conjunction with individual proposals collected from innovators, including banks, will provide tailored regulatory and supervisory assistance, when appropriate, to facilitate the testing of innovative and advanced technologies, products, services, systems, or activities.

While greater detail and the parameters of a planned innovation pilot program framework will be separately announced at a later date, innovators (banks and firms in partnership with banks) will be invited to voluntarily propose time-limited pilot programs, which will be collected and considered by the FDIC on a case-by-case basis. Innovators may request to participate by submitting proposals during a set time period for submissions. Applicants will propose the design and parameters of the pilot program tests, as well as any tailored regulatory and supervisory assistance needed from the FDIC. Collected proposals will be assessed, prioritized and identified for testing, either on their own or as part of a subject-area focused grouping of pilot programs.

The FDIC anticipates that proposals will involve cutting-edge innovations and novel approaches or applications involving a banking product, service, system, or activity that benefits and can lead to better outcomes for consumers through, for example, an increased range of products and services, reduced costs, or improved access to financial services, or that decreases operational, risk management, or compliance costs for insured depository institutions.

Accepted pilot programs may be conducted and monitored concurrently with a number of pilot programs selected in a given cohort with limited participants. Subject-area groupings could include pilot programs that match a general theme or product area of great promise or particular interest to the banking sector or the FDIC. This may be announced in advance of the collection or afterwards if multiple pilot programs proposals are found to share key attributes or defining characteristics (*e.g.,* similar product concept; banks of certain size; like customer focus).

Proposals will be collected from FDIC-supervised institutions (state-chartered banks and savings institutions that are not members of the Federal Reserve System), who may submit a pilot program proposal individually or together with companies that provide or aim to provide technologically driven products, services, or systems through direct contractual arrangements, partnerships, or joint ventures (this includes third-party service providers). Proposals may also be collected from innovators that are not themselves FDIC-supervised institutions and do not have a partnering institution but who may submit a pilot program proposal; however, the nonbank will be eligible to receive only a preliminary non-objection to its proposal conditioned on later submission (and collection) of the proposal in partnership with an FDIC-supervised institution.

The collection will be limited by eligibility for consideration. FDIC-supervised institutions that wish to participate in a pilot program must: (1) Have a demonstrated record of engaging in appropriate risk management; (2) be well-capitalized; (3) be well-rated for compliance and safety and soundness; and (4) not have significant pending supervisory or enforcement actions (or significant regulatory investigations). Other firms seeking to participate in a pilot program must: (1) Be a U.S. domicile; (2) conduct all pilot program banking activity (products and services) through an FDIC-supervised institution partner; and (3) not involve persons who have been convicted of any criminal offense involving dishonesty, breach of trust, or money laundering.

Request for Comment

Comments are invited on: (a) Whether the collection of information is necessary for the proper performance of the FDIC's functions, including whether the information has practical utility; (b) the accuracy of the estimate of the burden of the information collection, including the validity of the methodology and assumptions used; (c) ways to enhance the quality, utility, and clarity of the information to be collected; and (d) ways to minimize the burden of the collection of information on respondents, including through the use of automated collection techniques or other forms of information technology. All comments will become a matter of public record.

Federal Deposit Insurance Corporation.

Dated at Washington, DC, on January 9, 2020.

Annmarie H. Boyd,

Assistant Executive Secretary.

[FR Doc. 2020–00437 Filed 1–13–20; 8:45 am]

BILLING CODE 6714–01–P

GENERAL SERVICES ADMINISTRATION

[Notice–MA–2019–11; Docket No. 2019–0002, Sequence No. 33]

2020 Privately Owned Vehicle (POV) Mileage Reimbursement Rates; 2020 Standard Mileage Rate for Moving Purposes

AGENCY: Office of Government-wide Policy (OGP), General Services Administration (GSA).

ACTION: Notice.

SUMMARY: GSA is updating the mileage reimbursement rate for privately owned automobiles (POA), airplanes, and motorcycles as required by statute. This information will be available in FTR Bulletin 20–03, which can be found on GSA's website at *https://gsa.gov/ftrbulletins*.

DATES: *Applicability date:* This notice applies to travel and relocation performed on or after January 1, 2020 through December 31, 2020.

FOR FURTHER INFORMATION CONTACT: For clarification of content, please contact Ms. Cheryl D. McClain-Barnes, Program Analyst, Office of Government-wide Policy, Office of Asset and Transportation Management, at 202–208–4334, or by email at *travelpolicy@gsa.gov*. Please cite Notice of FTR Bulletin 20–03.

SUPPLEMENTARY INFORMATION: GSA is required by statute to set the mileage reimbursement rate for privately owned automobiles (POA) as the single standard mileage rate established by the Internal Revenue Service (IRS). The IRS mileage rate for medical or moving purposes is used to determine the POA rate when a Government-furnished automobile is authorized and also represents the privately owned vehicle (POV) standard mileage reimbursement rate for official relocation. Finally, GSA

conducts independent reviews of the cost of travel and the operation of privately owned airplanes and motorcycles on an annual basis to determine their corresponding mileage reimbursement rates. These reviews evaluate various factors, such as the cost of fuel, depreciation of the original vehicle cost, maintenance and insurance, state and Federal taxes, and consumer price index data. FTR Bulletin 20–03 establishes and announces the new CY 2020 POV mileage reimbursement rates for official temporary duty and relocation travel. This notice is the only notification to agencies of revisions to the POV mileage rates for official travel, and relocation, other than the changes posted on GSA's website at *https://gsa.gov/mileage*.

Jessica Salmoiraghi,

Associate Administrator, Office of Government-wide Policy.

[FR Doc. 2020–00390 Filed 1–13–20; 8:45 am]

BILLING CODE 6820–14–P

DEPARTMENT OF HEALTH AND HUMAN SERVICES

Centers for Disease Control and Prevention

Notice of Closed Meeting

Pursuant to section 10(d) of the Federal Advisory Committee Act, as amended, notice is hereby given of the following meeting.

The meeting will be closed to the public in accordance with the provisions set forth in sections 552b(c)(4) and 552b(c)(6), Title 5 U.S.C., as amended, and the Determination of the Director, Strategic Business Initiatives Unit, Office of the Chief Operating Officer, CDC, pursuant to Public Law 92–463. The grant applications and the discussions could disclose confidential trade secrets or commercial property such as patentable material, and personal information concerning individuals associated with the grant applications, the disclosure of which would constitute a clearly unwarranted invasion of personal privacy.

Name of Committee: Disease, Disability, and Injury Prevention and Control Special Emphasis Panel (SEP)—Funding Opportunity Announcement (FOA), PAR 16–098, Cooperative Research Agreements to the World Trade Center Health Program (U01).

Dates: March 10, 2020; and March 11, 2020.

Times: Day One: 8:00 a.m.–5:00 p.m., EDT; and Day Two: 8:00 a.m.–12:00 p.m., EDT.

Place: Courtyard Marriott Decatur Downtown/Emory, 130 Clairmont Avenue, Decatur, Georgia 30030, Telephone: (404) 371–0204.

Agenda: To review and evaluate grant applications.

FOR FURTHER INFORMATION CONTACT: Nina Turner, Ph.D., Scientific Review Officer, CDC/NIOSH, 1095 Willowdale Road, Mailstop G905, Morgantown, West Virginia 26505, Telephone: (304) 285–5975.

The Director, Strategic Business Initiatives Unit, Office of the Chief Operating Officer, Centers for Disease Control and Prevention, has been delegated the authority to sign **Federal Register** notices pertaining to announcements of meetings and other committee management activities, for both the Centers for Disease Control and Prevention and the Agency for Toxic Substances and Disease Registry.

Kalwant Smagh,

Director, Strategic Business Initiatives Unit, Office of the Chief Operating Officer, Centers for Disease Control and Prevention.

[FR Doc. 2020–00372 Filed 1–13–20; 8:45 am]

BILLING CODE 4163–18–P

DEPARTMENT OF HEALTH AND HUMAN SERVICES

Centers for Medicare & Medicaid Services

[Document Identifier: CMS–588, CMS–855B and CMS–R–262]

Agency Information Collection Activities: Submission for OMB Review; Comment Request

AGENCY: Centers for Medicare & Medicaid Services, HHS.

ACTION: Notice.

SUMMARY: The Centers for Medicare & Medicaid Services (CMS) is announcing an opportunity for the public to comment on CMS' intention to collect information from the public. Under the Paperwork Reduction Act of 1995 (PRA), federal agencies are required to publish notice in the **Federal Register** concerning each proposed collection of information, including each proposed extension or reinstatement of an existing collection of information, and to allow a second opportunity for public comment on the notice. Interested persons are invited to send comments regarding the burden estimate or any other aspect of this collection of information, including the necessity and utility of the proposed information collection for the proper performance of the agency's functions, the accuracy of the estimated burden, ways to enhance the quality, utility, and clarity of the information to be collected, and the use of automated collection techniques or other forms of information technology to minimize the information collection burden.

DATES: Comments on the collection(s) of information must be received by the OMB desk officer by February 13, 2020.

ADDRESSES: When commenting on the proposed information collections, please reference the document identifier or OMB control number. To be assured consideration, comments and recommendations must be received by the OMB desk officer via one of the following transmissions: OMB, Office of Information and Regulatory Affairs, Attention: CMS Desk Officer, Fax Number: (202) 395–5806 *OR*, Email: *OIRA_submission@omb.eop.gov.*

To obtain copies of a supporting statement and any related forms for the proposed collection(s) summarized in this notice, you may make your request using one of following:

1. Access CMS' website address at website address at *https://www.cms.gov/Regulations-and-Guidance/Legislation/PaperworkReductionActof1995/PRA-Listing.html.*

1. Email your request, including your address, phone number, OMB number, and CMS document identifier, to *Paperwork@cms.hhs.gov.*

2. Call the Reports Clearance Office at (410) 786–1326.

FOR FURTHER INFORMATION CONTACT: William Parham at (410) 786–4669.

SUPPLEMENTARY INFORMATION: Under the Paperwork Reduction Act of 1995 (PRA) (44 U.S.C. 3501–3520), federal agencies must obtain approval from the Office of Management and Budget (OMB) for each collection of information they conduct or sponsor. The term ''collection of information'' is defined in 44 U.S.C. 3502(3) and 5 CFR 1320.3(c) and includes agency requests or requirements that members of the public submit reports, keep records, or provide information to a third party. Section 3506(c)(2)(A) of the PRA (44 U.S.C. 3506(c)(2)(A)) requires federal agencies to publish a 30-day notice in the **Federal Register** concerning each proposed collection of information, including each proposed extension or reinstatement of an existing collection of information, before submitting the collection to OMB for approval. To comply with this requirement, CMS is publishing this notice that summarizes the following proposed collection(s) of information for public comment:

1. *Type of Information Collection Request:* Extension of a currently

approved collection; *Title of Information Collection:* Electronic Funds Transfer Authorization Agreement; *Use:* Section 1815(a) of the Social Security Act provides the authority for the Secretary of Health and Human Services to pay providers/suppliers of Medicare services at such time or times as the Secretary determines appropriate (but no less frequently than monthly). Under Medicare, CMS, acting for the Secretary, contracts with Fiscal Intermediaries and Carriers to pay claims submitted by providers/suppliers who furnish services to Medicare beneficiaries. Under CMS' payment policy, Medicare providers/suppliers have the option of receiving payments electronically. Form number CMS–588 authorizes the use of electronic fund transfers (EFTs). *Form Number:* CMS–588 (OMB control number: 0938–0626); *Frequency:* On occasion; *Affected Public:* Business or other for-profit and Not-for-profit institutions; *Number of Respondents:* 100,000; *Total Annual Responses:* 100,000; *Total Annual Hours:* 100,000. (For questions regarding this collection contact Kim McPhillips at 410–786–5374.)

2. *Type of Information Collection Request:* New collection (Request for a new OMB control number); *Title of Information Collection:* Medicare Enrollment Application for Clinics/Group Practices and Other Suppliers Revision; *Use:* The primary function of the CMS–855B Medicare enrollment application for suppliers, also known as Health Diagnosing and Treating Practitioners, is to gather information from the supplier that tells CMS who the supplier is, whether the supplier meets certain qualifications to be a Medicare health care provider or supplier, where the supplier practices or renders services, and other information necessary to establish correct claims payments.

The CMS–855B form includes an attachment for Opioid Treatment Programs (OTPs). This attachment is only used to capture the OTP personnel and consists of limited data fields (name, Social Security Number, National Provider Identifier, and license number) in response to the ''SUPPORT for Patients and Communities Act'' that was signed into law on October 24, 2018. This legislation was designed to alleviate the nationwide opioid crisis by: (1) Reducing the abuse and supply of opioids; (2) helping individuals recover from opioid addiction and supporting the families of these persons; and (3) establishing innovative and long-term solutions to the crisis. Section 2005 of the SUPPORT Act establishes a new Medicare Part B benefit for opioid use disorder (OUD) treatment services furnished by opioid treatment programs (OTPs) beginning on or after January 1, 2020. *Form Number:* CMS–855B (OMB control number: 0938–New); *Frequency:* Annually; *Affected Public:* Individuals and households; *Number of Respondents:* 327,696; *Total Annual Responses:* 327,696; *Total Annual Hours:* 522,041. (For questions regarding this collection contact Kim McPhillips at 410–786–5374.)

3. *Type of Information Collection Request:* Revision with change of a currently approved collection; *Title of Information Collection:* Contract Year 2021 Plan Benefit Package (PBP) Software and Formulary Submission; *Use:* Under the Medicare Modernization Act (MMA), Medicare Advantage (MA) and Prescription Drug Plan (PDP) organizations are required to submit plan benefit packages for all Medicare beneficiaries residing in their service area. The plan benefit package submission consists of the Plan Benefit Package (PBP) software, formulary file, and supporting documentation, as necessary. MA and PDP organizations use the PBP software to describe their organization's plan benefit packages, including information on premiums, cost sharing, authorization rules, and supplemental benefits. They also generate a formulary to describe their list of drugs, including information on prior authorization, step therapy, tiering, and quantity limits.

CMS requires that MA and PDP organizations submit a completed PBP and formulary as part of the annual bidding process. During this process, organizations prepare their proposed plan benefit packages for the upcoming contract year and submit them to CMS for review and approval. CMS uses this data to review and approve the benefit packages that the plans will offer to Medicare beneficiaries. This allows CMS to review the benefit packages in a consistent way across all submitted bids during with incredibly tight timeframes. This data is also used to populate data on Medicare Plan Finder, which allows beneficiaries to access and compare Medicare Advantage and Prescription Drug plans. *Form Number:* CMS–R–262 (OMB control number: 0938–0763); *Frequency:* Yearly; *Affected Public:* State, Local, or Tribal Governments; *Number of Respondents:* 672; *Total Annual Responses:* 7,264; *Total Annual Hours:* 67,368. (For policy questions regarding this collection contact Kristy L. Holtje at 410–786–2209.)

Dated: January 9, 2020.

William N. Parham, III,

Director, Paperwork Reduction Staff, Office of Strategic Operations and Regulatory Affairs.

[FR Doc. 2020–00426 Filed 1–13–20; 8:45 am]

BILLING CODE 4120–01–P

DEPARTMENT OF HEALTH AND HUMAN SERVICES

Centers for Medicare & Medicaid Services

[Document Identifier: CMS–P–0015A]

Agency Information Collection Activities: Proposed Collection; Comment Request

AGENCY: Centers for Medicare & Medicaid Services, HHS.

ACTION: Notice.

SUMMARY: The Centers for Medicare & Medicaid Services (CMS) is announcing an opportunity for the public to comment on CMS' intention to collect information from the public. Under the Paperwork Reduction Act of 1995 (the PRA), federal agencies are required to publish notice in the **Federal Register** concerning each proposed collection of information (including each proposed extension or reinstatement of an existing collection of information) and to allow 60 days for public comment on the proposed action. Interested persons are invited to send comments regarding our burden estimates or any other aspect of this collection of information, including the necessity and utility of the proposed information collection for the proper performance of the agency's functions, the accuracy of the estimated burden, ways to enhance the quality, utility, and clarity of the information to be collected, and the use of automated collection techniques or other forms of information technology to minimize the information collection burden.

DATES: Comments must be received by March 16, 2020.

ADDRESSES: When commenting, please reference the document identifier or OMB control number. To be assured consideration, comments and recommendations must be submitted in any one of the following ways:

1. *Electronically.* You may send your comments electronically to *http://www.regulations.gov.* Follow the instructions for ''Comment or Submission'' or ''More Search Options'' to find the information collection document(s) that are accepting comments.

2. *By regular mail.* You may mail written comments to the following

address: CMS, Office of Strategic Operations and Regulatory Affairs, Division of Regulations Development, Attention: Document Identifier/OMB Control Number __, Room C4–26–05, 7500 Security Boulevard, Baltimore, Maryland 21244–1850.

To obtain copies of a supporting statement and any related forms for the proposed collection(s) summarized in this notice, you may make your request using one of following:

1. Access CMS' website address at website address at *https://www.cms.gov/Regulations-and-Guidance/Legislation/PaperworkReductionActof1995/PRA-Listing.html.*

2. Email your request, including your address, phone number, OMB number, and CMS document identifier, to *Paperwork@cms.hhs.gov.*

3. Call the Reports Clearance Office at (410) 786–1326.

FOR FURTHER INFORMATION CONTACT: William N. Parham at (410) 786–4669.

SUPPLEMENTARY INFORMATION:

Contents

This notice sets out a summary of the use and burden associated with the following information collections. More detailed information can be found in each collection's supporting statement and associated materials (see **ADDRESSES**).

CMS–P–0015A Medicare Current Beneficiary Survey

Under the PRA (44 U.S.C. 3501–3520), federal agencies must obtain approval from the Office of Management and Budget (OMB) for each collection of information they conduct or sponsor. The term ''collection of information'' is defined in 44 U.S.C. 3502(3) and 5 CFR 1320.3(c) and includes agency requests or requirements that members of the public submit reports, keep records, or provide information to a third party. Section 3506(c)(2)(A) of the PRA requires federal agencies to publish a 60-day notice in the **Federal Register** concerning each proposed collection of information, including each proposed extension or reinstatement of an existing collection of information, before submitting the collection to OMB for approval. To comply with this requirement, CMS is publishing this notice.

Information Collection

1. *Type of Information Collection Request:* Revision with change of a currently approved collection; *Title of Information Collection:* Medicare Current Beneficiary Survey; *Use:* CMS is the largest single payer of health care in the United States. The agency plays a direct or indirect role in administering health insurance coverage for more than 120 million people across the Medicare, Medicaid, CHIP, and Exchange populations. A critical aim for CMS is to be an effective steward, major force, and trustworthy partner in supporting innovative approaches to improving quality, accessibility, and affordability in healthcare. CMS also aims to put patients first in the delivery of their health care needs.

The Medicare Current Beneficiary Survey (MCBS) is the most comprehensive and complete survey available on the Medicare population and is essential in capturing data not otherwise collected through our operations. The MCBS is an in-person, nationally-representative, longitudinal survey of Medicare beneficiaries that we sponsor and is directed by the Office of Enterprise Data and Analytics (OEDA). The survey captures beneficiary information whether aged or disabled, living in the community or facility, or serviced by managed care or fee-for-service. Data produced as part of the MCBS are enhanced with our administrative data (*e.g.* fee-for-service claims, prescription drug event data, enrollment, etc.) to provide users with more accurate and complete estimates of total health care costs and utilization. The MCBS has been continuously fielded for more than 28 years, encompassing over 1 million interviews and more than 100,000 survey participants. Respondents participate in up to 11 interviews over a four year period. This gives a comprehensive picture of health care costs and utilization over a period of time.

The MCBS continues to provide unique insight into the Medicare program and helps CMS and our external stakeholders better understand and evaluate the impact of existing programs and significant new policy initiatives. In the past, MCBS data have been used to assess potential changes to the Medicare program. For example, the MCBS was instrumental in supporting the development and implementation of the Medicare prescription drug benefit by providing a means to evaluate prescription drug costs and out-of-pocket burden for these drugs to Medicare beneficiaries. Beginning in 2021, this proposed revision to the clearance will add a few new measures to existing questionnaire sections. The revisions will result in a slight increase in respondent burden due to the addition of the new items. *Form Number:* CMS–P–0015A (OMB control number: 0938–0568); *Frequency:* Occasionally; *Affected Public:* Business or other for-profits and Not-for-profit institutions; *Number of Respondents:* 13,656; *Total Annual Responses:* 35,998; *Total Annual Hours:* 44,573 (For policy questions regarding this collection contact William Long at 410–786–7927.)

Dated: January 9, 2020.

William N. Parham, III,

Director, Paperwork Reduction Staff, Office of Strategic Operations and Regulatory Affairs.

[FR Doc. 2020–00424 Filed 1–13–20; 8:45 am]

BILLING CODE 4120–01–P

DEPARTMENT OF HEALTH AND HUMAN SERVICES

National Institutes of Health

National Institute on Aging; Notice of Closed Meetings

Pursuant to section 10(d) of the Federal Advisory Committee Act, as amended, notice is hereby given of the following meetings.

The meetings will be closed to the public in accordance with the provisions set forth in sections 552b(c)(4) and 552b(c)(6), Title 5 U.S.C., as amended. The grant applications and the discussions could disclose confidential trade secrets or commercial property such as patentable material, and personal information concerning individuals associated with the grant applications, the disclosure of which would constitute a clearly unwarranted invasion of personal privacy.

Name of Committee: National Institute on Aging Special Emphasis Panel; Nathan Shock Center.

Date: March 10, 2020.

Time: 8:30 a.m. to 4:00 p.m.

Agenda: To review and evaluate grant applications.

Place: Hyatt Regency, Bethesda, Conference Room Executive Boardroom, One Bethesda Metro Center, 7400 Wisconsin Avenue, Bethesda, MD 20814.

Contact Person: Bita Nakhai, Ph.D., Scientific Review Officer, Scientific Review Branch, National Institute on Aging, National Institutes of Health, Gateway Bldg., 2C212, 7201 Wisconsin Avenue, Bethesda, MD 20892, (301) 402–7701, *nakhaib@nia.nih.gov.*

Name of Committee: National Institute on Aging Special Emphasis Panel; Nathan Shock Centers Coordinating Center.

Date: March 10, 2020.

Time: 4:00 p.m. to 5:00 p.m.

Agenda: To review and evaluate grant applications.

Place: Hyatt Regency Bethesda, Conference Room Executive Boardroom, One Bethesda Metro Center, 7400 Wisconsin Avenue, Bethesda, MD 20814.

Contact Person: Bita Nakhai, Ph.D., Scientific Review Officer, Scientific Review Branch, National Institute on Aging, National Institutes of Health, Gateway Bldg., 2C212,

7201 Wisconsin Avenue, Bethesda, MD 20892, (301) 402–7701, *nakhaib@nia.nih.gov*.

(Catalogue of Federal Domestic Assistance Program Nos. 93.866, Aging Research, National Institutes of Health, HHS)

Dated: January 8, 2020.

Miguelina Perez,

Program Analyst, Office of Federal Advisory Committee Policy.

[FR Doc. 2020–00371 Filed 1–13–20; 8:45 am]

BILLING CODE 4140–01–P

DEPARTMENT OF HEALTH AND HUMAN SERVICES

National Institutes of Health

Center for Scientific Review; Notice of Closed Meetings

Pursuant to section 10(d) of the Federal Advisory Committee Act, as amended, notice is hereby given of the following meetings.

The meetings will be closed to the public in accordance with the provisions set forth in sections 552b(c)(4) and 552b(c)(6), Title 5 U.S.C., as amended. The grant applications and the discussions could disclose confidential trade secrets or commercial property such as patentable material, and personal information concerning individuals associated with the grant applications, the disclosure of which would constitute a clearly unwarranted invasion of personal privacy.

Name of Committee: Risk, Prevention and Health Behavior Integrated Review Group; Psychosocial Development, Risk and Prevention Study Section.

Date: February 6–7, 2020.

Time: 8:00 a.m. to 6:00 p.m.

Agenda: To review and evaluate grant applications.

Place: Washington Marriott Georgetown, 1221 22nd Street NW, Washington, DC 20037.

Contact Person: Anna L. Riley, Ph.D., Scientific Review Officer, Center for Scientific Review, National Institutes of Health, 6701 Rockledge Drive, Room 3114, MSC 7759, Bethesda, MD 20892, (301) 435–2889, *rileyann@csr.nih.gov*.

Name of Committee: Center for Scientific Review Special Emphasis Panel; Ocular Surface, Cornea, Anterior Segment Glaucoma and Refractive Error.

Date: February 6, 2020.

Time: 8:00 a.m. to 7:00 p.m.

Agenda: To review and evaluate grant applications.

Place: St. Gregory Hotel, 2033 M Street NW, Washington, DC 20036.

Contact Person: Julius Cinque, MS, Scientific Review Officer, Center for Scientific Review, National Institutes of Health, 6701 Rockledge Drive, Room 5186, MSC 7846, Bethesda, MD 20892, *cinquej@csr.nih.gov*.

Name of Committee: Biological Chemistry and Macromolecular Biophysics Integrated Review Group; Synthetic and Biological Chemistry A Study Section.

Date: February 6–7, 2020.

Time: 8:00 a.m. to 5:00 p.m.

Agenda: To review and evaluate grant applications.

Place: Canopy by Hilton, 940 Rose Avenue, North Bethesda, MD 20852.

Contact Person: Anita Szajek, Ph.D., Scientific Review Officer, Center for Scientific Review, National Institutes of Health, 6701 Rockledge Drive, Room 4187, Bethesda, MD 20892, (301) 827–6276, *anita.szajek@nih.gov*.

(Catalogue of Federal Domestic Assistance Program Nos. 93.306, Comparative Medicine; 93.333, Clinical Research, 93.306, 93.333, 93.337, 93.393–93.396, 93.837–93.844, 93.846–93.878, 93.892, 93.893, National Institutes of Health, HHS)

Dated: January 8, 2020.

Miguelina Perez,

Program Analyst, Office of Federal Advisory Committee Policy.

[FR Doc. 2020–00370 Filed 1–13–20; 8:45 am]

BILLING CODE 4140–01–P

DEPARTMENT OF HEALTH AND HUMAN SERVICES

National Institutes of Health

National Institute of Diabetes and Digestive and Kidney Diseases; Notice of Closed Meeting

Pursuant to section 10(d) of the Federal Advisory Committee Act, as amended, notice is hereby given of the following meeting.

The meeting will be closed to the public in accordance with the provisions set forth in sections 552b(c)(4) and 552b(c)(6), Title 5 U.S.C., as amended. The grant applications and the discussions could disclose confidential trade secrets or commercial property such as patentable material, and personal information concerning individuals associated with the grant applications, the disclosure of which would constitute a clearly unwarranted invasion of personal privacy.

Name of Committee: National Institute of Diabetes and Digestive and Kidney Diseases Special Emphasis Panel; RFADK–19–014: NIDDK Catalyst Award in Diabetes, Endocrinology and Metabolic Diseases (DP1).

Date: March 19, 2020.

Time: 10:00 a.m. to 5:00 p.m.

Agenda: To review and evaluate grant applications.

Place: National Institutes of Health, Two Democracy Boulevard, 6707 Democracy Boulevard, Bethesda, MD 20892 (Telephone Conference Call).

Contact Person: Najma S. Begum, Ph.D., Scientific Review Officer, Review Branch, DEA, NIDDK, National Institutes of Health, Room 7349, 6707 Democracy Boulevard, Bethesda, MD 20892–5452, (301) 594–8894, *begumn@niddk.nih.gov*.

(Catalogue of Federal Domestic Assistance Program Nos. 93.847, Diabetes, Endocrinology and Metabolic Research; 93.848, Digestive Diseases and Nutrition Research; 93.849, Kidney Diseases, Urology and Hematology Research, National Institutes of Health, HHS)

Dated: January 8, 2020.

Miguelina Perez,

Program Analyst, Office of Federal Advisory Committee Policy.

[FR Doc. 2020–00369 Filed 1–13–20; 8:45 am]

BILLING CODE 4140–01–P

DEPARTMENT OF HOMELAND SECURITY

Coast Guard

[Docket No. USCG–2019–0483]

National Towing Safety Advisory Committee; Initial Solicitation for Members

AGENCY: Coast Guard, Department of Homeland Security.

ACTION: Request for applications.

SUMMARY: The Coast Guard is requesting applications from persons interested in serving as a member of the National Towing Safety Advisory Committee (''Committee''). This recently established Committee will advise the Secretary of the Department of Homeland Security on matters relating to shallow-draft inland navigation, coastal waterway navigation, and towing safety. Please read this notice for a description of the 18 Committee positions we are seeking to fill.

DATES: Your completed application should reach the Coast Guard on or before March 16, 2020.

ADDRESSES: Applicants should send a cover letter expressing interest in an appointment to the National Towing Safety Advisory Committee and a resume detailing the applicant's experience. We will not accept a biography. Applications for members drawn from the general public must be accompanied by a completed OGE Form 450 (see supplementary information below).

Applications should be submitted via one of the following methods:

- *By Email: Matthew.D.Layman@uscg.mil* (preferred).
- *By Fax:* 202–372–8382; ATTN: Mr. Matthew Layman, Alternate Designated Federal Officer; or
- *By Mail:* Mr. Matthew Layman, Alternate Designated Federal Officer, Commandant (CG–OES–2), U.S. Coast

Guard Stop 7509, 2703 Martin Luther King Jr. Avenue SE, Washington, DC 20593–7509.

FOR FURTHER INFORMATION CONTACT: Mr. Matthew Layman, Alternate Designated Federal Officer of the National Towing Safety Advisory Committee; Telephone 202–372–1421; or Email at *Matthew.D.Layman@uscg.mil.*

SUPPLEMENTARY INFORMATION: The National Towing Safety Advisory Committee is a Federal advisory committee. It will operate under the provisions of the *Federal Advisory Committee Act,* 5 United States Code, Appendix, and the administrative provisions in Section 601 of the *Frank LoBiondo Coast Guard Authorization Act of 2018* (specifically, 46 U.S.C. 15109).

The Committee was established on December 4, 2018, by the *Frank LoBiondo Coast Guard Authorization Act of 2018,* which added section 15108, National Towing Safety Advisory Committee, to Title 46 of the U.S. Code (46 U.S.C. 15108). The Committee will advise the Secretary of Homeland Security on matters relating to shallow-draft inland navigation, coastal waterway navigation, and towing safety.

The Committee is required to hold meetings at least once a year in accordance with 46 U.S.C. 15109(a). The meetings are generally held in cities that have a high concentration of towing-industry and related businesses.

All members serve at their own expense and receive no salary or other compensation from the Federal Government. Members may be reimbursed, however, for travel and per diem in accordance with Federal Travel Regulations.

Under provisions in 46 U.S.C. 15109(f)(6), if you are appointed as a member of the Committee, your membership term will expire on December 31 of the third full year after the effective date of your appointment. In this initial solicitation for Committee members, we will consider applications for all 18 positions:

- Seven members to represent the barge and towing industry, reflecting a regional geographic balance;
- One member to represent the offshore mineral and oil supply vessel industry;
- One member to represent masters and pilots of towing vessels who hold active licenses and have experience on the Western Rivers and the Gulf Intracoastal Waterway;
- One member to represent masters of towing vessels in offshore service who hold active licenses;
- One member to represent masters of active ship-docking or harbor towing vessels;
- One member to represent licensed and unlicensed towing vessel engineers with formal training and experience;
- Two members to represent port districts, authorities, or terminal operators;
- Two members to represent shippers and, of the two, one engaged in the shipment of oil or hazardous materials by barge; and
- Two members drawn from the general public.

Each member of the Committee must have particular expertise, knowledge, and experience in matters relating to the function of the Committee which is to advise the Secretary of Homeland Security on matters relating to shallow-draft inland navigation, coastal waterway navigation, and towing safety.

If you are selected as a member drawn from the general public, you will be appointed and serve as a Special Government Employee as defined in section 202(a) of Title 18, United States Code. Applicants for appointment as a Special Government Employee are required to complete a Confidential Financial Disclosure Report (OGE Form 450) for new entrants and if appointed as a member must submit Form 450 annually. The Coast Guard may not release the reports or the information in them to the public except under an order issued by a Federal Court or as otherwise provided under the Privacy Act (5 U.S.C. 552a). Only the Designated U.S. Coast Guard Ethics Official or his or her designee may release a Confidential Financial Disclosure Report. Applicants can obtain this form by going to the website of the Office of Government Ethics (*www.oge.gov*), or by calling or emailing the individual listed above in the **FOR FURTHER INFORMATION CONTACT** section.

Registered lobbyists are not eligible to serve on Federal Advisory Committees in an individual capacity. See ''*Revised Guidance on Appointment of Lobbyists to Federal Advisory Committees, Boards and Commissions*'' (79 FR 47482, August 13, 2014). Registered lobbyists are ''lobbyists,'' as defined in 2 U.S.C. 1602, who are required by 2 U.S.C. 1603 to register with the Secretary of the Senate and the Clerk of the House of Representatives.

The Department of Homeland Security does not discriminate in selection of Committee members on the basis of race, color, religion, sex, national origin, political affiliation, sexual orientation, gender identity, marital status, disabilities and genetic information, age, membership in an employee organization, or any other non-merit factor. The Department of Homeland Security strives to achieve a widely diverse candidate pool for all of its recruitment selections.

If you are interested in applying to become a member of the Committee, send your cover letter and resume to Mr. Matthew Layman, Alternate Designated Federal Officer of the National Towing Safety Advisory Committee via one of the transmittal methods in the **ADDRESSES** section by the deadline in the **DATES** section of this notice. If you send your application to us via email, we will send you an email confirming receipt of your application.

Dated: January 8, 2020.

Jeffrey G. Lantz,

Director of Commercial Regulations and Standards.

[FR Doc. 2020–00354 Filed 1–13–20; 8:45 am]

BILLING CODE 9110–04–P

DEPARTMENT OF HOMELAND SECURITY

U.S. Customs and Border Protection

Accreditation and Approval of Saybolt LP (Mobile, AL) as a Commercial Gauger and Laboratory

AGENCY: U.S. Customs and Border Protection, Department of Homeland Security.

ACTION: Notice of accreditation and approval of Saybolt LP (Mobile, AL), as a commercial gauger and laboratory.

SUMMARY: Notice is hereby given, pursuant to CBP regulations, that Saybolt LP (Mobile, AL), has been approved to gauge petroleum and certain petroleum products and accredited to test petroleum and certain petroleum products for customs purposes for the next three years as of May 15, 2019.

DATES: Saybolt LP (Mobile, AL) was approved and accredited as a commercial gauger and laboratory as of May 15, 2019. The next triennial inspection date will be scheduled for May 2022.

FOR FURTHER INFORMATION CONTACT: Dr. Justin Shey, Laboratories and Scientific Services, U.S. Customs and Border Protection, 1300 Pennsylvania Avenue NW, Suite 1500N, Washington, DC 20229, tel. 202–344–1060.

SUPPLEMENTARY INFORMATION: Notice is hereby given pursuant to 19 CFR 151.12 and 19 CFR 151.13, that Saybolt LP, 11 Midtown Park East, Mobile, AL 36606, has been approved to gauge petroleum and certain petroleum products and accredited to test petroleum and certain

petroleum products for customs purposes, in accordance with the provisions of 19 CFR 151.12 and 19 CFR 151.13.

Saybolt LP (Mobile, AL) is approved for the following gauging procedures for petroleum and certain petroleum products from the American Petroleum Institute (API):

API chapters	Title
3	Tank Gauging.
7	Temperature Determination.
8	Sampling.
11	Physical Properties Data.
12	Calculations.
17	Marine Measurement.

Saybolt LP (Mobile, AL) is accredited for the following laboratory analysis procedures and methods for petroleum and certain petroleum products set forth by the U.S. Customs and Border Protection Laboratory Methods (CBPL) and American Society for Testing and Materials (ASTM):

CBPL No.	ASTM	Title
27–01	D 287	Standard Test Method for API Gravity of Crude Petroleum and Petroleum Products (Hydrometer Method).
27–02	D 1298	Standard Test Method for Density, Relative Density (Specific Gravity), or API Gravity of Crude Petroleum and Liquid Petroleum Products by Hydrometer Method.
27–03	D 4006	Standard Test Method for Water in Crude Oil by Distillation.
27–04	D 95	Standard Test Method for Water in Petroleum Products and Bituminous Materials by Distillation.
27–05	D 4928	Standard Test Method for Water in Crude Oils by Coulometric Karl Fischer Titration.
27–06	D 473	Standard Test Method for Sediment in Crude Oils and Fuel Oils by the Extraction Method.
27–08	D 86	Standard Test Method for Distillation of Petroleum Products at Atmospheric Pressure.
27–11	D 445	Standard Test Method for Kinematic Viscosity of Transparent and Opaque Liquids (and Calculation of Dynamic Viscosity).
27–13	D 4294	Standard Test Method for Sulfur in Petroleum and Petroleum Products by Energy-Dispersive X-ray Fluorescence Spectrometry.
27–48	D 4052	Standard Test Method for Density and Relative Density of Liquids by Digital Density Meter.
27–50	D 93	Standard Test Methods for Flash-Point by Pensky-Martens Closed Cup Tester.
27–58	D 5191	Standard Test Method For Vapor Pressure of Petroleum Products (Mini Method).

Anyone wishing to employ this entity to conduct laboratory analyses and gauger services should request and receive written assurances from the entity that it is accredited or approved by the U.S. Customs and Border Protection to conduct the specific test or gauger service requested. Alternatively, inquiries regarding the specific test or gauger service this entity is accredited or approved to perform may be directed to the U.S. Customs and Border Protection by calling (202) 344–1060. The inquiry may also be sent to *CBPGaugersLabs@cbp.dhs.gov.* Please reference the website listed below for a complete listing of CBP approved gaugers and accredited laboratories. *http://www.cbp.gov/about/labs-scientific/commercial-gaugers-and-laboratories.*

Dated: January 02, 2020.

Dave Fluty,

Executive Director, Laboratories and Scientific Services Directorate.

[FR Doc. 2020–00352 Filed 1–13–20; 8:45 am]

BILLING CODE 9111–14–P

DEPARTMENT OF HOUSING AND URBAN DEVELOPMENT

[Docket No. FR–7011–N–63]

30-Day Notice of Proposed Information Collection: Ginnie Mae Multiclass Securities Program Documents; OMB #2503–0030

AGENCY: Office of the Chief Information Officer, HUD.

ACTION: Notice.

SUMMARY: HUD is seeking approval from the Office of Management and Budget (OMB) for the information collection described below. In accordance with the Paperwork Reduction Act, HUD is requesting comment from all interested parties on the proposed collection of information. The purpose of this notice is to allow for 30 days of public comment.

DATES: *Comments Due Date:* February 13, 2020.

ADDRESSES: Interested persons are invited to submit comments regarding this proposal. Comments should refer to the proposal by name and/or OMB Control Number and should be sent to: HUD Desk Officer, Office of Management and Budget, New Executive Office Building, Washington, DC 20503; fax: 202–395–5806, Email: *OIRA Submission@omb.eop.gov.*

FOR FURTHER INFORMATION CONTACT: Anna P. Guido, Reports Management Officer, QMAC, Department of Housing and Urban Development, 451 7th Street SW, Washington, DC 20410; email her at *Anna.P.Guido@hud.gov* or telephone 202–402–5535. This is not a toll-free number. Person with hearing or speech impairments may access this number through TTY by calling the toll-free Federal Relay Service at (800) 877–8339. Copies of available documents submitted to OMB may be obtained from Ms. Guido.

SUPPLEMENTARY INFORMATION: This notice informs the public that HUD is seeking approval from OMB for the information collection described in Section A. The **Federal Register** notice that solicited public comment on the information collection for a period of 60 days was published on November 4, 2019 at 84 FR 59412.

A. Overview of Information Collection

Title of Information Collection: Ginnie Mae Multiclass Securities Program Documents (Forms and Electronic Data Submissions).

OMB Approval Number: 2503–0030.

Type of Request: Reinstatement of currently approved collection.

Form Number: None.

Description of the need for the information and proposed use: This information collection is required in connection with the operation of the Ginnie Mae Multiclass Securities program. Ginnie Mae's authority to guarantee multiclass instruments is contained in 306(g)(1) of the National Housing Act (''NHA'') (12 U.S.C. 1721(g)(1)), which authorizes Ginnie Mae to guarantee ''securities * * * based on or backed by a trust or pool composed of mortgages. * * *'' Multiclass securities are backed by Ginnie Mae securities, which are backed by government insured or guaranteed mortgages. Ginnie Mae's authority to operate a Multiclass Securities program is recognized in Section 3004 of the Omnibus Budget Reconciliation Act of 1993 (''OBRA''), which amended 306(g)(3) of the NHA (12 U.S.C. 1271(g)(3)) to provide Ginnie Mae with greater flexibility for the Multiclass

Securities program regarding fee structure, contracting, industry consultation, and program implementation. Congress annually sets Ginnie Mae's commitment authority to guarantee mortgage-backed (''MBS'') pursuant to 306(G)(2) of the NHA (12 U.S.C. 1271(g)(2)). Since the multiclass are backed by Ginnie Mae Single Class MBS, Ginnie Mae has already guaranteed the collateral for the multiclass instruments.

The Ginnie Mae Multiclass Securities Program consists of Ginnie Mae Real Estate Mortgage Investment Conduit (''REMIC'') securities, Stripped Mortgage-Backed Securities (''SMBS''), and Platinum securities. The Multiclass Securities program provides an important adjunct to Ginnie Mae's secondary mortgage market activities, allowing the private sector to combine and restructure cash flows from Ginnie Mae Single Class MBS into securities that meet unique investor requirements in connection with yield, maturity, and call-option protection. The intent of the Multiclass Securities program is to increase liquidity in the secondary mortgage market and to attract new sources of capital for federally insured or guaranteed loans. Under this program, Ginnie Mae guarantees, with the full faith and credit of the United States, the timely payment of principal and interest on Ginnie Mae REMIC, SMBS and Platinum securities.

Information collection	Number of respondents	Frequency of response	Responses per annum	Burden hour per reponse	Annual burden hrs	Hourly cost per response	Annual cost
Pricing Letter	18.00	10.00	180.00	0.50	90.00	$43.00	$3,870.00
Structured Term Sheet	18.00	10.00	180.00	3.00	540.00	43.00	23,220.00
Trust (REMIC) Agreement	18.00	10.00	180.00	1.00	180.00	43.00	7,740.00
Trust Opinion	18.00	10.00	180.00	4.00	720.00	43.00	30,960.00
MX Trust Agreement	18.00	10.00	180.00	0.16	28.80	43.00	1,238.40
MX Trust Opinion	18.00	10.00	180.00	4.00	720.00	43.00	30,960.00
RR Certificate	18.00	10.00	180.00	0.08	14.40	43.00	619.20
Sponsor Agreement	18.00	10.00	180.00	0.05	9.00	43.00	387.00
Table of Contents	18.00	10.00	180.00	0.33	59.40	43.00	2,554.20
Issuance Statement	18.00	10.00	180.00	0.05	9.00	43.00	387.00
Tax Opinion	18.00	10.00	180.00	4.00	720.00	43.00	30,960.00
Transfer Affidavit	18.00	10.00	180.00	0.08	14.40	43.00	619.20
Supplemental Statement	18.00	0.25	4.50	1.00	4.50	43.00	193.50
Final Data Statements (attached to closing letter)	18.00	10.00	180.00	32.00	5,760.00	43.00	247,680.00
Accountants' Closing Letter	18.00	10.00	180.00	8.00	1,440.00	43.00	61,920.00
Accountants' OSC Letter	18.00	10.00	180.00	8.00	1,440.00	43.00	61,920.00
Structuring Data	18.00	10.00	180.00	8.00	1,440.00	43.00	61,920.00
Financial Statements	18.00	10.00	180.00	1.00	180.00	43.00	7,740.00
Principal and Interest Factor File Specifications	18.00	10.00	180.00	16.00	2,880.00	43.00	123,840.00
Distribution Dates and Statement	18.00	10.00	180.00	0.42	75.60	43.00	3,250.80
Term Sheet	18.00	10.00	180.00	2.00	360.00	43.00	15,480.00
New Issue File Layout	18.00	10.00	180.00	4.00	720.00	43.00	30,960.00
Flow of Funds	18.00	10.00	180.00	0.16	28.80	43.00	1,238.40
Trustee Receipt	18.00	10.00	180.00	2.00	360.00	43.00	15,480.00
Subtotal					17,793.90		765,137.70
Platinum Securities			4,144.50				
Deposit Agreement	19.00	10.00	190.00	1.00	190.00	43.00	8,170.00
MBS Schedule	19.00	10.00	190.00	0.16	30.40	43.00	1,307.20
New Issue File Layout	19.00	10.00	190.00	4.00	760.00	43.00	32,680.00
Principal and Interest Factor File Specifications	19.00	10.00	190.00	16.00	3,040.00	43.00	130,720.00
Subtotal			760.00		4,020.40		172,877.20
Total Annual Responses			4,904.50				
Total Burden Hours					21,814.30		
Total Cost							938,014.90

B. Solicitation of Public Comment

This notice is soliciting comments from members of the public and affected parties concerning the collection of information described in Section A on the following:

(1) Whether the proposed collection of information is necessary for the proper performance of the functions of the agency, including whether the information will have practical utility;

(2) The accuracy of the agency's estimate of the burden of the proposed collection of information;

(3) Ways to enhance the quality, utility, and clarity of the information to be collected; and

(4) Ways to minimize the burden of the collection of information on those who are to respond; including through the use of appropriate automated collection techniques or other forms of information technology, *e.g.,* permitting electronic submission of responses.

HUD encourages interested parties to submit comment in response to these questions.

Authority: Section 3507 of the Paperwork Reduction Act of 1995, 44 U.S.C. Chapter 35.

Dates: December 20, 2019.

Anna P. Guido,

Department Reports Management Officer, Office of the Chief Information Officer.

[FR Doc. 2020–00317 Filed 1–13–20; 8:45 am]

BILLING CODE 4210–67–P

DEPARTMENT OF HOUSING AND URBAN DEVELOPMENT

[Docket No. FR–6187–N–02]

White House Council on Eliminating Regulatory Barriers to Affordable Housing; Request for Information; Extension of Public Comment Period

AGENCY: Office of the Assistant Secretary for Policy Development and Research (PD&R), Department of Housing and Urban Development (HUD).

ACTION: Request for Information; extension of public comment period.

SUMMARY: Through today's notice, HUD announces that it is extending the public comment period on its ''White House Council on Eliminating Regulatory Barriers to Affordable Housing; Request for Information,'' published in the **Federal Register** on November 22, 2019.

DATES: *Comment Due Date:* The comment due date of January 21, 2020, for the Request for Information published on November 22, 2019, at 84 FR 64549, is extended to January 31, 2020.

ADDRESSES: Interested persons are invited to submit comments responsive to this Request for Information to the Regulations Division, Office of General Counsel, Department of Housing and Urban Development, 451 7th Street SW, Room 10276, Washington, DC 20410–0500. Communications must refer to the above docket number and title. There are two methods for submitting public comments. All submissions must refer to the above docket number and title.

1. *Submission of Comments by Mail.* Comments may be submitted by mail to the Regulations Division, Office of General Counsel, Department of Housing and Urban Development, 451 7th Street SW, Room 10276, Washington, DC 20410–0500.

2. *Electronic Submission of Comments.* Interested persons may submit comments electronically through the Federal eRulemaking Portal at *http://www.regulations.gov.* HUD strongly encourages commenters to submit their feedback and recommendations electronically. Electronic submission of comments allows the commenter maximum time to prepare and submit a response, ensures timely receipt by HUD, and enables HUD to make comments immediately available to the public. Comments submitted electronically through the *http://www.regulations.gov* website can be viewed by other commenters and interested members of the public. Commenters should follow the instructions provided on that site to submit comments electronically.

Note: To receive consideration as public comments, responses must be submitted through one of the two methods specified above. It is not acceptable to submit comments by facsimile (fax) or electronic mail. Again, all submissions must refer to the docket number and title of the notice.

Public Inspection of Public Comments. All properly submitted comments and communications submitted to HUD will be available for public inspection and downloading at *http://www.regulations.gov.*

FOR FURTHER INFORMATION CONTACT: Contact Pamela Blumenthal, Office of Policy Development and Research, Department of Housing and Urban Development, 451 7th Street SW, Room 8138, Washington, DC 20410–0500; telephone number 202–402–7012 (this is not a toll-free number). Persons with hearing or speech impairments may access this number through TTY by calling the toll-free Federal Relay Service at 1–800–877–8339.

SUPPLEMENTARY INFORMATION: On November 22, 2019 (84 FR 64549), HUD published a Request for Information in the **Federal Register** to solicit public comments on Federal, State, local, and Tribal laws, regulations, land use requirements, and administrative practices that artificially raise the costs of affordable housing development and contribute to shortages in housing supply. HUD published this Request for Information consistent with Executive Order 13878, ''Establishing a White House Council on Eliminating Regulatory Barriers to Affordable Housing,'' dated June 25, 2019 (84 FR 30853). Interested readers should refer to the supplementary information of the November 22, 2019 Request for Information for additional information on Executive Order 13878 and the specific information requested by HUD.

HUD's November 22, 2019 Request for Information established a comment due date of January 21, 2020. In response to recent requests for additional time to submit public comments, HUD believes an extension of the deadline would provide the time needed for Federal, State, local, and Tribal government officials and relevant stakeholders to submit comments and provide the specific information requested. Therefore, HUD is announcing through this notice an extended public comment period, for an additional 10-day period, to January 31, 2020.

Dated: January 8, 2020.

Seth Appleton,

Assistant Secretary for Policy Development and Research.

[FR Doc. 2020–00441 Filed 1–13–20; 8:45 am]

BILLING CODE 4210–67–P

DEPARTMENT OF THE INTERIOR

Fish and Wildlife Service

[FWS–R6–ES–2019–N144; FXES11140600000–201–FF06E00000]

Endangered and Threatened Wildlife and Plants; Initiation of 5-Year Status Review of Grizzly Bear (*Ursus arctos horribilis*) in the conterminous United States

AGENCY: Fish and Wildlife Service, Interior.

ACTION: Notice of initiation of review; request for information.

SUMMARY: We, the U.S. Fish and Wildlife Service, are initiating a 5-year status review of Grizzly bear (*Ursus arctos horribilis*) in the conterminous United States under the Endangered Species Act. A 5-year status review is based on the best scientific and commercial data available at the time of

the review; therefore, we are requesting submission of any new information on this species that has become available since the last review of the species in 2011.

DATES: To ensure consideration in our review, we are requesting submission of new information no later than March 16, 2020. However, we will continue to accept new information about the species at any time.

ADDRESSES: *Submitting Information:* If you wish to provide information on the grizzly bear, please submit your information and materials by one of the following methods:

- *Internet:* By email to *grizzly_review@fws.gov.*
- *U.S. mail or hand-delivery:* U.S. Fish and Wildlife Service, Grizzly Bear Recovery Office, University of Montana, University Hall #309, Missoula, MT 59812.

Reviewing Submitted Information: Submissions and materials received are available for public review upon request at the Grizzly Bear Recovery Office listed in **ADDRESSES** during normal business hours. For more information, see Public Availability of Submissions under **SUPPLEMENTARY INFORMATION**.

FOR FURTHER INFORMATION CONTACT: Hilary Cooley, Grizzly Bear Recovery Coordinator, via telephone 406–243–4903 or via the Federal Relay Service at 800–877–8339 for TTY assistance.

SUPPLEMENTARY INFORMATION: We, the U.S. Fish and Wildlife Service, are initiating a 5-year status review of Grizzly bear (*Ursus arctos horribilis*) in the conterminous United States under the Endangered Species Act of 1973, as amended (Act; 16 U.S.C. 1531 *et seq.*). A 5-year status review is based on the best scientific and commercial data available at the time of the review; therefore, we are requesting submission of any new information on this species that has become available since the last review of the species in 2011.

Why do we conduct 5-year status reviews?

Under the Act, we maintain Lists of Endangered and Threatened Wildlife and Plants (which we collectively refer to as the List) in the Code of Federal Regulations (CFR) at 50 CFR 17.11 (for animals) and 17.12 (for plants). Section 4(c)(2)(A) of the Act requires us to review each listed species' status at least once every 5 years. Our regulations at 50 CFR 424.21 require that we publish a notice in the **Federal Register** announcing those species under active review. For additional information about 5-year status reviews, go to *http://www.fws.gov/endangered/what-we-do/recovery-overview.html,* scroll down to ''Learn More about 5-Year Status Reviews,'' and click on our factsheet.

What information do we consider in our review?

A 5-year status review considers all new information available at the time of the review. In conducting these reviews, we consider the best scientific and commercial data that have become available since the listing determination or most recent status review, such as:

(A) Species biology, including but not limited to population trends, distribution, abundance, demographics, and genetics;

(B) Habitat conditions, including but not limited to amount, distribution, and suitability;

(C) Conservation measures that have been implemented that benefit the species;

(D) Threat status and trends in relation to the five listing factors (as defined in section 4(a)(1) of the Act); and

(E) Other new information, data, or corrections, including but not limited to taxonomic or nomenclatural changes, identification of erroneous information contained in the List, and improved analytical methods.

Any new information will be considered during the 5-year status review and will also be useful in evaluating the ongoing recovery programs for the species.

Which species are under review?

This notice announces our active review of the grizzly bear in the conterminous United States.

Request for New Information

To ensure that a 5-year status review is complete and based on the best available scientific and commercial information, we request new information from all sources. See What Information Do We Consider in Our Review? for specific criteria. If you submit information, please support it with documentation such as maps, bibliographic references, methods used to gather and analyze the data, and/or copies of any pertinent publications, reports, or letters by knowledgeable sources.

How do I ask questions or provide information?

Please see **ADDRESSES** and **FOR FURTHER INFORMATION CONTACT**.

Public Availability of Submissions

Before including your address, phone number, email address, or other personal identifying information in your submission, you should be aware that your entire submission—including your personal identifying information—may be made publicly available at any time. While you can ask us in your submission to withhold your personal identifying information from public review, we cannot guarantee that we will be able to do so.

Contents of Public Submissions

Please make your submissions as specific as possible. Please confine your submissions to issues for which we seek input in this notice, and explain the basis for your submissions. Include sufficient information with your submissions to allow us to authenticate any scientific or commercial data you include.

The information and recommendations that will be most useful and likely to be relevant to agency decisions are: (1) Those supported by quantitative information or studies; and (2) Those that include citations to, and analyses of, the applicable laws and regulations.

Completed and Active Reviews

A list of all completed and currently active 5-year status reviews addressing species for which the Mountain-Prairie Region of the U.S. Fish and Wildlife Service has lead responsibility is available at *http://www.fws.gov/endangered/.*

Authority

This document is published under the authority of the Endangered Species Act of 1973, as amended (16 U.S.C. 1531 *et seq.*).

Matt Hogan,

Deputy Regional Director, Mountain-Prairie Region.

[FR Doc. 2020–00401 Filed 1–13–20; 8:45 am]

BILLING CODE 4333–15–P

DEPARTMENT OF THE INTERIOR

Bureau of Land Management

[20X LLUTY02000 L17110000.PN0000 LXSSJ0650000]

Notice of Public Meeting, Bears Ears National Monument Advisory Committee, Utah

AGENCY: Bureau of Land Management, Interior.

ACTION: Notice of public meeting.

SUMMARY: In accordance with the Federal Land Policy and Management Act, as amended, the Federal Advisory Committee Act, and the Federal Lands Recreation Enhancement Act, the U.S.

Department of the Interior Bureau of Land Management's (BLM) Bears Ears National Monument Advisory Committee (BENM MAC) will meet as indicated below.

DATES: The BENM MAC is scheduled to meet on February 25–26, 2020. The meeting will take place from 8:30 a.m. to 5 p.m. on February 25 and 8:30 a.m. to 4 p.m. on February 26.

ADDRESSES: The meeting will be held at the Hideout Community Center located at 648 South Hideout Way, Monticello, Utah 84535.

FOR FURTHER INFORMATION CONTACT: Jake Palma, Bears Ears National Monument Manager, P.O. Box 7, Monticello, Utah 84535 or via email with the subject line ''BENM–MAC'' to *blm_ut_mt_mail@blm.gov,* or by calling the Monticello Field Office at (435) 587–1500. Persons who use a telecommunications device for the deaf (TDD) may call the Federal Relay Service (FRS) at 1–800–877–8339 to leave a message or question for the above individual. The FRS is available 24 hours a day, seven days a week. Replies are provided during normal business hours.

SUPPLEMENTARY INFORMATION: The MAC was established to provide advice and information to the Secretary of the Interior through the Director of the BLM, and to the Secretary of Agriculture, through the Chief of the U.S. Forest Service, to consider in planning for and managing the Bears Ears National Monument. The 15-member committee represents a wide range of interests including local and state government, paleontological and archaeological expertise, conservation community, livestock grazing permittees, Tribal, developed and dispersed recreation, private landowners, local business owners, and the public at large. More information can be found on the BENM MAC website at *https://www.blm.gov/get-involved/rac-near-you/utah/benm-mac.*

The meeting is open to the public; however, transportation, lodging, and meals are the responsibility of the participating individuals. A public comment period will be offered each day of the scheduled meeting. Depending on the number of people wishing to comment and the time available, the time for individual comments may be limited. People wishing to speak will be asked to sign in before the scheduled oral comment time for planning and record keeping purposes. Written comments may also be sent to the Monticello Field Office at the address listed in the **FOR FURTHER INFORMATION CONTACT** section of this notice. All comments received prior to the meeting will be provided to the BENM MAC.

Before including your address, phone number, email address, or other personal identifying information in your comments, please be aware that your entire comment, including your personal identifying information, may be made publicly available at any time. While you can ask us in your comment to withhold your personal identifying information from public review, we cannot guarantee that we will be able to do so.

Detailed meeting minutes for the BENM MAC meeting will be maintained in the Canyon Country District Office and will be available for public inspection and reproduction during regular business hours within ninety (90) days following the meeting. Minutes will also be posted to the BENM MAC website.

Authority: 43 CFR 1784.4–2.

Anita Bilbao,

Acting State Director.

[FR Doc. 2020–00432 Filed 1–13–20; 8:45 am]

BILLING CODE 4310–DQ–P

DEPARTMENT OF THE INTERIOR

National Park Service

[NPS–WASO–NRNHL–DTS#–29566; PPWOCRADI0, PCU00RP14.R50000]

National Register of Historic Places; Notification of Pending Nominations and Related Actions

AGENCY: National Park Service, Interior.

ACTION: Notice.

SUMMARY: The National Park Service is soliciting comments on the significance of properties nominated before December 28, 2019, for listing or related actions in the National Register of Historic Places.

DATES: Comments should be submitted by January 29, 2020.

ADDRESSES: Comments may be sent via U.S. Postal Service and all other carriers to the National Register of Historic Places, National Park Service, 1849 C St. NW, MS 7228, Washington, DC 20240.

SUPPLEMENTARY INFORMATION: The properties listed in this notice are being considered for listing or related actions in the National Register of Historic Places. Nominations for their consideration were received by the National Park Service before December 28, 2019. Pursuant to Section 60.13 of 36 CFR part 60, written comments are being accepted concerning the significance of the nominated properties under the National Register criteria for evaluation.

Before including your address, phone number, email address, or other personal identifying information in your comment, you should be aware that your entire comment—including your personal identifying information—may be made publicly available at any time. While you can ask us in your comment to withhold your personal identifying information from public review, we cannot guarantee that we will be able to do so.

Nominations submitted by State or Tribal Historic Preservation Officers:

DELAWARE

New Castle County

Budovitch, Florence and Isaac, House, 4611 Bedford Blvd., Wilmington, SG100004954

Newark Union Church and Cemetery, 8 and 20 Newark Union Public Rd., Wilmington vicinity, SG100004955

FLORIDA

Miami-Dade County

La Palma Hotel, 116 Alhambra Cir., Coral Gables, SG100004971

Miami Black Police Precinct and Courthouse, 480 NW 11th St., Miami, SG100004974

Duval County

Memorial Cemetery, (Historic African American Cemeteries in Duval County, Florida MPS), Moncrief Rd. & Edgewood Ave. West, Jacksonville, MP100004973

IOWA

Mahaska County

Oskaloosa Post Office, 206 North Market St., Oskaloosa, SG100004975

Mitchell County

Saint Ansgar Public School, 202 South Washington St., St. Ansgar, SG100004976

MISSISSIPPI

Warren County

Uptown Vicksburg Historic District (Boundary Increase II), (Vicksburg MPS), Roughly bounded by Washington, Grove, China, Clay, Locust, South & Veto Sts., Vicksburg, BC100004962

NEW JERSEY

Essex County

Maple Avenue School, 33 Maple Ave., Newark City, SG100004957

NEW YORK

Chemung County

Elmira Civic Historic District (Boundary Increase and Decrease), Portions of Lake, East Church, East Water, Clemens Ctr. Pkwy., East Market, Baldwin, William, & Carroll Sts., Elmira, BC100004956

TEXAS

Comal County

Kappelmann-Mayer Ranch, 4738 FM 1863, Bulverde, SG100004965

Harris County

Battelstein's, 812 Main St., Houston, SG100004966
Cameron Iron Works, 711 Milby St., Houston, SG100004967
Hermann Park Municipal Golf Clubhouse, 6201 Hermann Park Dr., Houston, SG100004968

Tarrant County

Katy Freight Depot, 100 South Jones St., Fort Worth, SG100004969

Travis County

Town Lake Gazebo, 9307 Ann & Roy Butler Hike & Bike Trail, Austin, SG100004970

WASHINGTON

King County

Colman Park & Dose Terrace Stairs, Roughly bounded by South Massachusetts St., South Dose Terrace, 31st Ave. South, & the Lake Washington shoreline, Seattle, SG100004959
Mount Baker Park and Boulevard, Lake Park Dr. South & South Mount Baker Park Blvd., Seattle, SG100004961

Spokane County

Columbia Building, 107 South Howard St., Spokane, SG100004960

WEST VIRGINIA

Kanawha County

West Virginia Schools for the Colored Deaf & Blind, Barron Dr., Institute, SG100004950

WISCONSIN

Walworth County

Borg, George W., Corporation, 820 East Wisconsin St., Delavan, SG100004953

Additional documentation has been received for the following resources:

MINNESOTA

Ramsey County

Watson, Dwight H. and Clara M., House (Additional Documentation), 402 Hall Ave., St. Paul, AD100004757

MISSISSIPPI

Warren County

Uptown Vicksburg Historic District (Additional Documentation), (Vicksburg MPS), Roughly bounded by Washington, Grove, China, Clay, Locust, South & Veto Sts., Vicksburg, AD93000850

NEW YORK

Chemung County

Elmira Civic Historic District (Additional Documentation), Portions of Lake, East Church, East Water, Clemens Ctr. Pkwy., East Market, Baldwin, William, & Carroll Sts., Elmira, AD80002596

WEST VIRGINIA

Kanawha County

Kanawha State Forest Historic District (Additional Documentation), Co. Rd. 42/43 2.6 mi. S of Charleston, Loundendale vicinity, AD93000228

Authority: Section 60.13 of 36 CFR part 60

Dated: December 30, 2019.

Julie H. Ernstein,

Supervisory Archeologist, National Register of Historic Places/National Historic Landmarks Program.

[FR Doc. 2020–00395 Filed 1–13–20; 8:45 am]

BILLING CODE 4312–52–P

DEPARTMENT OF THE INTERIOR

Office of the Special Trustee for American Indians

[DT23200000.DST000000.T7AC.241A; OMB Control Number 1035–0004]

Agency Information Collection Activities; Trust Funds for Tribes and Individual Indians

AGENCY: Office of the Secretary, Office of the Special Trustee for American Indians, Interior.

ACTION: Notice of information collection; request for comment.

SUMMARY: In accordance with the Paperwork Reduction Act of 1995, we, the Office of the Special Trustee for American Indians (OST) are proposing to renew an information collection.

DATES: Interested persons are invited to submit comments on or before February 13, 2020.

ADDRESSES: Send written comments on this information collection request (ICR) to the Office of Management and Budget's Desk Officer for the Department of the Interior by email at *OIRA_Submission@omb.eop.gov*; or via facsimile to (202) 395–5806. Please provide a copy of your comments to Nina Alexander, 4400 Masthead NE, Albuquerque, NM 87109; or by email to *nina_alexander@ost.doi.gov*. Please reference OMB Control Number 1035–0004 in the subject line of your comments.

FOR FURTHER INFORMATION CONTACT: To request additional information about this ICR, contact Nina Alexander by email at *nina_alexander@ost.doi.gov,* or by telephone at (505) 816–1324. You may also view the ICR at *http://www.reginfo.gov/public/do/PRAMain*.

SUPPLEMENTARY INFORMATION: In accordance with the Paperwork Reduction Act of 1995, we provide the general public and other Federal agencies with an opportunity to comment on new, proposed, revised, and continuing collections of information. This helps us assess the impact of our information collection requirements and minimize the public's reporting burden. It also helps the public understand our information collection requirements and provide the requested data in the desired format.

A **Federal Register** notice with a 60-day public comment period soliciting comments on this collection of information was published on March 12, 2019 (84 FR 8337). No comments were received.

We are again soliciting comments on the proposed ICR that is described below. We are especially interested in public comment addressing the following issues: (1) Is the collection necessary to the proper functions of the OST; (2) will this information be processed and used in a timely manner; (3) is the estimate of burden accurate; (4) how might the OST enhance the quality, utility, and clarity of the information to be collected; and (5) how might the OST minimize the burden of this collection on the respondents, including through the use of information technology.

Comments that you submit in response to this notice are a matter of public record. Before including your address, phone number, email address, or other personal identifying information in your comment, you should be aware that your entire comment—including your personal identifying information—may be made publicly available at any time. While you can ask us in your comment to withhold your personal identifying information from public review, we cannot guarantee that we will be able to do so.

Abstract: As codified in 25 U.S.C. 4001, The American Indian Trust Fund Management Reform Act of 1994 (the Reform Act) makes provisions for the Office of the Special Trustee for American Indians to administer trust fund accounts for individuals and tribes. The collection of information is required to facilitate the processing of deposits, investments, and distribution of monies held in trust by the U.S. Government and administered by the Office of the Special Trustee for American Indians. The collection of information provides the information needed to establish procedures to: Deposit and retrieve funds from accounts, perform transactions such as cashing checks, reporting lost or stolen checks, stopping payment of checks, and general verification for account activities.

Title of Collection: Trust Funds for Tribes and Individual Indians, 25 CFR 115.

OMB Control Number: 1035–0004.

Form Number: OST–01–004—Trust Funds for Tribes and Individual Indians, 25 CFR Party 115.

Type of Review: Extension of a currently approved collection.

Respondents/Affected Public: Individuals/households.

Total Estimated Number of Annual Respondents: 42,109.

Total Estimated Number of Annual Responses: 42,109.

Estimated Completion Time per Response: 15 minutes.

Total Estimated Number of Annual Burden Hours: 10,527 Hours.

Respondent's Obligation: Required to Obtain or Retain a Benefit.

Frequency of Collection: One time.

Total Estimated Annual Nonhour Burden Cost: None.

An agency may not conduct or sponsor and a person is not required to respond to a collection of information unless it displays a currently valid OMB control number.

The authority for this action is the Paperwork Reduction Act of 1995 (44 U.S.C. 3501 *et seq*).

Dated: January 8, 2020.

John Montel,

Associate Chief Information Officer, OST.

[FR Doc. 2020–00392 Filed 1–13–20; 8:45 am]

BILLING CODE 4334–63–P

INTERNATIONAL TRADE COMMISSION

[Investigation No. 731–TA–1145 (Second Review)]

Steel Threaded Rod From China; Scheduling of an Expedited Five-Year Review

AGENCY: United States International Trade Commission.

ACTION: Notice.

SUMMARY: The Commission hereby gives notice of the scheduling of an expedited review pursuant to the Tariff Act of 1930 (''the Act'') to determine whether revocation of the antidumping duty order on steel threaded rod from China would be likely to lead to continuation or recurrence of material injury within a reasonably foreseeable time.

DATES: October 4, 2019.

FOR FURTHER INFORMATION CONTACT: Jason Duncan (202–205–3432), Office of Investigations, U.S. International Trade Commission, 500 E Street SW, Washington, DC 20436. Hearing-impaired persons can obtain information on this matter by contacting the Commission's TDD terminal on 202–205–1810. Persons with mobility impairments who will need special assistance in gaining access to the Commission should contact the Office of the Secretary at 202–205–2000. General information concerning the Commission may also be obtained by accessing its internet server (*https://www.usitc.gov*). The public record for this review may be viewed on the Commission's electronic docket (EDIS) at *https://edis.usitc.gov.*

SUPPLEMENTARY INFORMATION:

Background.—On October 4, 2019, the Commission determined that the domestic interested party group response to its notice of institution (84 FR 31341, July 1, 2019) of the subject five-year review was adequate and that the respondent interested party group response was inadequate. The Commission did not find any other circumstances that would warrant conducting a full review.[1] Accordingly, the Commission determined that it would conduct an expedited review pursuant to section 751(c)(3) of the Tariff Act of 1930 (19 U.S.C. 1675(c)(3)).

For further information concerning the conduct of this review and rules of general application, consult the Commission's Rules of Practice and Procedure, part 201, subparts A and B (19 CFR part 201), and part 207, subparts A, D, E, and F (19 CFR part 207).

Staff report.—A staff report containing information concerning the subject matter of the review will be placed in the nonpublic record on January 8, 2020, and made available to persons on the Administrative Protective Order service list for this review. A public version will be issued thereafter, pursuant to section 207.62(d)(4) of the Commission's rules.

Written submissions.—As provided in section 207.62(d) of the Commission's rules, interested parties that are parties to the review and that have provided individually adequate responses to the notice of institution,[2] and any party other than an interested party to the review may file written comments with the Secretary on what determination the Commission should reach in the review. Comments are due on or before January 16, 2020, and may not contain new factual information. Any person that is neither a party to the five-year review nor an interested party may submit a brief written statement (which shall not contain any new factual information) pertinent to the review by January 16, 2020. However, should the Department of Commerce (''Commerce'') extend the time limit for its completion of the final results of its review, the deadline for comments (which may not contain new factual information) on Commerce's final results is three business days after the issuance of Commerce's results. If comments contain business proprietary information (BPI), they must conform with the requirements of sections 201.6, 207.3, and 207.7 of the Commission's rules. The Commission's rules with respect to filing were revised effective July 25, 2014. *See* 79 FR 35920 (June 25, 2014). The Commission's *Handbook on Filing Procedures,* available on the Commission's website at *https://www.usitc.gov/documents/handbook_on_filing_procedures.pdf,* elaborates upon the Commission's procedures with respect to filings.

In accordance with sections 201.16(c) and 207.3 of the rules, each document filed by a party to the review must be served on all other parties to the review (as identified by either the public or BPI service list), and a certificate of service must be timely filed. The Secretary will not accept a document for filing without a certificate of service.

Determination.—The Commission has determined this review is extraordinarily complicated and therefore has determined to exercise its authority to extend the review period by up to 90 days pursuant to 19 U.S.C. 1675(c)(5)(B).

Authority: This review is being conducted under authority of title VII of the Tariff Act of 1930; this notice is published pursuant to section 207.62 of the Commission's rules.

By order of the Commission.

Issued: January 9, 2020.

Lisa Barton,

Secretary to the Commission.

[FR Doc. 2020–00415 Filed 1–13–20; 8:45 am]

BILLING CODE 7020–02–P

[1] A record of the Commissioners' votes, the Commission's statement on adequacy, and any individual Commissioner's statements will be available from the Office of the Secretary and at the Commission's website.

[2] The Commission has found the response submitted by Vulcan Threaded Products, Inc. to be individually adequate. Comments from other interested parties will not be accepted (*see* 19 CFR 207.62(d)(2)).

INTERNATIONAL TRADE COMMISSION

Notice of Receipt of Complaint; Solicitation of Comments Relating to the Public Interest

AGENCY: U.S. International Trade Commission.

ACTION: Notice.

SUMMARY: Notice is hereby given that the U.S. International Trade Commission has received a complaint entitled *Certain Audio Players and Controllers, Components Thereof, and Products Containing the Same DN 3428;* the Commission is soliciting comments on any public interest issues raised by

the complaint or complainant's filing pursuant to the Commission's Rules of Practice and Procedure.

FOR FURTHER INFORMATION CONTACT: Lisa R. Barton, Secretary to the Commission, U.S. International Trade Commission, 500 E Street SW, Washington, DC 20436, telephone (202) 205–2000. The public version of the complaint can be accessed on the Commission's Electronic Document Information System (EDIS) at *https://edis.usitc.gov,* and will be available for inspection during official business hours (8:45 a.m. to 5:15 p.m.) in the Office of the Secretary, U.S. International Trade Commission, 500 E Street SW, Washington, DC 20436, telephone (202) 205–2000.

General information concerning the Commission may also be obtained by accessing its internet server at United States International Trade Commission (USITC) at *https://www.usitc.gov.* The public record for this investigation may be viewed on the Commission's Electronic Document Information System (EDIS) at *https://edis.usitc.gov.* Hearing-impaired persons are advised that information on this matter can be obtained by contacting the Commission's TDD terminal on (202) 205–1810.

SUPPLEMENTARY INFORMATION: The Commission has received a complaint and a submission pursuant to § 210.8(b) of the Commission's Rules of Practice and Procedure filed on behalf of Sonos, Inc. on January 7, 2020. The complaint alleges violations of section 337 of the Tariff Act of 1930 (19 U.S.C. 1337) in the importation into the United States, the sale for importation, and the sale within the United States after importation of certain audio players and controllers, components thereof, and products containing the same. The complaint names as respondents: Google LLC of Mountain View, CA; and Alphabet Inc. of Mountain View, CA. The complainant requests that the Commission issue a limited exclusion, cease desist orders and impose a bond upon respondents' alleged infringing articles during the 60-day Presidential review period pursuant to 19 U.S.C. 1337(j).

Proposed respondents, other interested parties, and members of the public are invited to file comments on any public interest issues raised by the complaint or § 210.8(b) filing. Comments should address whether issuance of the relief specifically requested by the complainant in this investigation would affect the public health and welfare in the United States, competitive conditions in the United States economy, the production of like or directly competitive articles in the United States, or United States consumers.

In particular, the Commission is interested in comments that:

(i) Explain how the articles potentially subject to the requested remedial orders are used in the United States;

(ii) identify any public health, safety, or welfare concerns in the United States relating to the requested remedial orders;

(iii) identify like or directly competitive articles that complainant, its licensees, or third parties make in the United States which could replace the subject articles if they were to be excluded;

(iv) indicate whether complainant, complainant's licensees, and/or third party suppliers have the capacity to replace the volume of articles potentially subject to the requested exclusion order and/or a cease and desist order within a commercially reasonable time; and

(v) explain how the requested remedial orders would impact United States consumers.

Written submissions on the public interest must be filed no later than by close of business, eight calendar days after the date of publication of this notice in the **Federal Register**. There will be further opportunities for comment on the public interest after the issuance of any final initial determination in this investigation. Any written submissions on other issues must also be filed by no later than the close of business, eight calendar days after publication of this notice in the **Federal Register**. Complainant may file replies to any written submissions no later than three calendar days after the date on which any initial submissions were due. Any submissions and replies filed in response to this Notice are limited to five (5) pages in length, inclusive of attachments.

Persons filing written submissions must file the original document electronically on or before the deadlines stated above and submit 8 true paper copies to the Office of the Secretary by noon the next day pursuant to § 210.4(f) of the Commission's Rules of Practice and Procedure (19 CFR 210.4(f)). Submissions should refer to the docket number (''Docket No. 3428'') in a prominent place on the cover page and/or the first page. (*See* Handbook for Electronic Filing Procedures, Electronic Filing Procedures [1]). Persons with questions regarding filing should contact the Secretary (202–205–2000).

Any person desiring to submit a document to the Commission in confidence must request confidential treatment. All such requests should be directed to the Secretary to the Commission and must include a full statement of the reasons why the Commission should grant such treatment. *See* 19 CFR 201.6. Documents for which confidential treatment by the Commission is properly sought will be treated accordingly. All information, including confidential business information and documents for which confidential treatment is properly sought, submitted to the Commission for purposes of this Investigation may be disclosed to and used: (i) By the Commission, its employees and Offices, and contract personnel (a) for developing or maintaining the records of this or a related proceeding, or (b) in internal investigations, audits, reviews, and evaluations relating to the programs, personnel, and operations of the Commission including under 5 U.S.C. Appendix 3; or (ii) by U.S. government employees and contract personnel,[2] solely for cybersecurity purposes. All nonconfidential written submissions will be available for public inspection at the Office of the Secretary and on EDIS.[3]

This action is taken under the authority of section 337 of the Tariff Act of 1930, as amended (19 U.S.C. 1337), and of §§ 201.10 and 210.8(c) of the Commission's Rules of Practice and Procedure (19 CFR 201.10, 210.8(c)).

By order of the Commission.

Issued: January 8, 2020.

Lisa Barton,

Secretary to the Commission.

[FR Doc. 2020–00353 Filed 1–13–20; 8:45 am]

BILLING CODE 7020–02–P

[1] Handbook for Electronic Filing Procedures: *https://www.usitc.gov/documents/handbook_on_filing_procedures.pdf.*

[2] All contract personnel will sign appropriate nondisclosure agreements.

[3] Electronic Document Information System (EDIS): *https://edis.usitc.gov.*

DEPARTMENT OF LABOR

Office of Workers' Compensation Programs

Advisory Board on Toxic Substances and Worker Health; Meetings

AGENCY: Office of Workers' Compensation Programs, Department of Labor.

ACTION: Announcement of telephonic meeting of the Advisory Board on Toxic Substances and Worker Health (Advisory Board) for the Energy

Employees Occupational Illness Compensation Program Act (EEOICPA).

SUMMARY: The Advisory Board will meet January 28, 2020, via teleconference, from 1:00 p.m. to 4:30 p.m. Eastern time. Submissions of comments and materials for the record, and requests for special accommodations: You must submit (postmark, send, transmit) comments, materials, and requests for special accommodations for the meetings by January 21, 2020.

FOR FURTHER INFORMATION CONTACT: For press inquiries: Ms. Laura McGinnis, Office of Public Affairs, U.S. Department of Labor, Room S–1028, 200 Constitution Ave. NW, Washington, DC 20210; telephone (512) 396–6652; email *mcginnis.laura@dol.gov.*

SUPPLEMENTARY INFORMATION: The Advisory Board will meet telephonically on Tuesday, January 28, 2020, from 1:00 p.m. to 4:30 p.m. Eastern time. Advisory Board members will attend the meeting by teleconference. The teleconference number and other details for participating remotely will be posted on the Advisory Board's website, *http://www.dol.gov/owcp/energy/regs/compliance/AdvisoryBoard.htm,* 72 hours prior to the commencement of the first meeting date. Advisory Board meetings are open to the public.

The Advisory Board is mandated by Section 3687 of EEOICPA. The Secretary of Labor established the Board under this authority and Executive Order 13699 (June 26, 2015). The purpose of the Advisory Board is to advise the Secretary with respect to: (1) The Site Exposure Matrices (SEM) of the Department of Labor; (2) medical guidance for claims examiners for claims with the EEOICPA program, with respect to the weighing of the medical evidence of claimants; (3) evidentiary requirements for claims under Part B of EEOICPA related to lung disease; and (4) the work of industrial hygienists and staff physicians and consulting physicians of the Department of Labor and reports of such hygienists and physicians to ensure quality, objectivity, and consistency. The Advisory Board sunsets on December 19, 2024.

The Advisory Board operates in accordance with the Federal Advisory Committee Act (FACA) (5 U.S.C. App. 2) and its implementing regulations (41 CFR part 102–3).

Agenda: The tentative agenda for the Advisory Board meeting includes:

- Discuss any recommendation responses provided by the program and status of outstanding recommendations;
- Discuss data provided by the program at the request of the Board;
- Discuss cases provided by the program at the request of the Board;
- Working group reports and follow up items from the Board's last in-person meeting;
- Discuss recent program changes; and
- Administrative issues raised by Advisory Board functions and future Advisory Board activities.

OWCP transcribes and prepares detailed minutes of Advisory Board meetings. OWCP will post the transcripts and minutes on the Advisory Board web page, *http://www.dol.gov/owcp/energy/regs/compliance/AdvisoryBoard.htm,* along with written comments, speaker presentations, and other materials submitted to the Advisory Board or presented at Advisory Board meetings.

Public Participation, Submissions, and Access to the Public Record

Advisory Board meetings: The Advisory Board will meet via teleconference on Tuesday, January 28, 2020, from 1:00 p.m. to 4:30 p.m. Eastern time. All Advisory Board meetings are open to the public. The teleconference number and other details for listening to the meeting will be posted on the Advisory Board's website no later than 72 hours prior to the meeting, at *http://www.dol.gov/owcp/energy/regs/compliance/AdvisoryBoard.htm.*

Requests for special accommodations: Please submit requests for special accommodations to access the telephonic Advisory Board meeting by email, telephone, or hard copy to Ms. Carrie Rhoads, OWCP, Room S–3524, U.S. Department of Labor, 200 Constitution Ave. NW, Washington, DC 20210; telephone (202) 343–5580; email *EnergyAdvisoryBoard@dol.gov.*

Submission of written comments for the record: You may submit written comments, identified as for the Advisory Board and with the meeting date of January 28, 2020, by any of the following methods:

- *Electronically:* Send to: *EnergyAdvisoryBoard@dol.gov* (specify in the email subject line, ''Advisory Board Meeting January 28, 2020'').
- *Mail, express delivery, hand delivery, messenger, or courier service:* Submit one copy to the following address: U.S. Department of Labor, Office of Workers' Compensation Programs, Advisory Board on Toxic Substances and Worker Health, Room S–3522, 200 Constitution Ave. NW, Washington, DC 20210. Due to security-related procedures, receipt of submissions by regular mail may experience significant delays.

Comments must be received by January 21, 2020. OWCP will make available publically, without change, any written comments, including any personal information that you provide. Therefore, OWCP cautions interested parties against submitting personal information such as Social Security numbers and birthdates.

Electronic copies of this **Federal Register** notice are available at *http://www.regulations.gov.* This notice, as well as news releases and other relevant information, are also available on the Advisory Board's web page at *http://www.dol.gov/owcp/energy/regs/compliance/AdvisoryBoard.htm.*

FOR FURTHER INFORMATION CONTACT: You may contact Douglas Fitzgerald, Designated Federal Officer, at *fitzgerald.douglas@dol.gov,* or Carrie Rhoads, Alternate Designated Federal Officer, at *rhoads.carrie@dol.gov,* U.S. Department of Labor, 200 Constitution Avenue NW, Suite S–3524, Washington, DC 20210, telephone (202) 343–5580. This is not a toll-free number.

Signed at Washington, DC, this 6th day of January, 2020.

Julia K. Hearthway,

Director, Office of Workers' Compensation Programs.

[FR Doc. 2020–00343 Filed 1–13–20; 8:45 am]

BILLING CODE 4510–24–P

DEPARTMENT OF LABOR

Office of Workers' Compensation Programs

Division of Federal Employees' Compensation Proposed Extension of Existing Collection; Comment Request

ACTION: Notice.

SUMMARY: The Department of Labor, as part of its continuing effort to reduce paperwork and respondent burden, conducts a preclearance consultation program to provide the general public and Federal agencies with an opportunity to comment on proposed and/or continuing collections of information in accordance with the Paperwork Reduction Act of 1995 (PRA95). This program helps to ensure that requested data can be provided in the desired format, reporting burden (time and financial resources) is minimized, collection instruments are clearly understood, and the impact of collection requirements on respondents can be properly assessed. Currently, the Office of Workers' Compensation Programs is soliciting comments concerning the proposed collection: Claim for Reimbursement of Benefit

Payments and Claims Expense Under the War Hazards Compensation Act (CA–278). A copy of the proposed information collection request can be obtained by contacting the office listed below in the addresses section of this Notice.

DATES: Written comments must be submitted to the office listed in the addresses section below on or before March 16, 2020.

ADDRESSES: You may submit comments by mail, delivery service, or by hand to Anjanette Suggs, U.S. Department of Labor, 200 Constitution Ave. NW, Room S–3323, Washington, DC 20210; by fax, (202) 354–9660, or email to *suggs.anjanette@dol.gov.* Please use only one method of transmission for comments (mail or email).

SUPPLEMENTARY INFORMATION:

I. Background: The Office of Workers' Compensation Programs (OWCP) is the federal agency responsible for administration of the War Hazards Compensation Act (WHCA), 42 U.S.C. 1701 *et seq.* Under section 1704(a) of the WHCA, an insurance carrier or self-insured who has paid workers' compensation benefits to or on account of any person for a war-risk hazard may seek reimbursement for benefits paid (plus expenses) out of the Employment Compensation Fund for the Federal Employees' Compensation Act (FECA) at 5 U.S.C. 8147. Form CA–278 is used by insurance carriers and the self-insured to request reimbursement. The information collected is used by OWCP to process requests for reimbursement of WHCA benefit payments and claims expense that are submitted by insurance carriers and self-insureds. The information also is used by OWCP to decide whether it should opt to pay ongoing WHCA benefits directly to the injured worker. This information collection is currently approved for use through March 31, 2019.

II. Review Focus: The Department of Labor is particularly interested in comments which:

* evaluate whether the proposed collection of information is necessary for the proper performance of the functions of the agency, including whether the information will have practical utility;
* evaluate the accuracy of the agency's estimate of the burden of the proposed collection of information, including the validity of the methodology and assumptions used;
* enhance the quality, utility and clarity of the information to be collected; and
* minimize the burden of the collection of information on those who are to respond, including through the use of appropriate automated, electronic, mechanical, or other technological collection techniques or other forms of information technology, *e.g.,* permitting electronic submissions of responses.

III. Current Actions: The Department of Labor seeks extension of approval to collect this information in order to carry out its responsibility to reimburse insurance carriers and self-insureds who meet the statutory requirements of the War Hazards Compensation Act (WHCA) for reimbursement.

Type of Review: Extension.

Agency: Office of Workers' Compensation Programs.

Title: Claim for Reimbursement of Benefit Payments and Claims Expense Under the War Hazards Compensation Act.

OMB Number: 1240–0006.

Agency Number: CA–278.

Affected Public: Business or other for-profit.

Total Respondents: 815.

Total Responses: 815.

Estimated Total Burden Hours: 408.

Total Burden Cost (capital/startup): $0.

Total Burden Cost (operating/maintenance): $1,182.

Comments submitted in response to this notice will be summarized and/or included in the request for Office of Management and Budget approval of the information collection request; they will also become a matter of public record.

Anjanette Suggs,

Agency Clearance Officer, Office of Workers' Compensation Programs, U.S. Department of Labor.

[FR Doc. 2020–00368 Filed 1–13–20; 8:45 am]

BILLING CODE 4510–CH–P

NATIONAL CREDIT UNION ADMINISTRATION

Submission for OMB Review; Comment Request

AGENCY: National Credit Union Administration (NCUA).

ACTION: Notice.

SUMMARY: The National Credit Union Administration (NCUA) will submit the following information collection request to the Office of Management and Budget (OMB) for review and clearance in accordance with the Paperwork Reduction Act of 1995, on or after the date of publication of this notice.

DATES: Comments should be received on or before February 13, 2020 to be assured of consideration.

ADDRESSES: Send comments regarding the burden estimate, or any other aspect of this information collection, including suggestions for reducing the burden, to (1) Office of Information and Regulatory Affairs, Office of Management and Budget, Attention: Desk Officer for NCUA, New Executive Office Building, Room 10235, Washington, DC 20503, or email at *OIRA_Submission@OMB.EOP.gov* and (2) NCUA PRA Clearance Officer, 1775 Duke Street, Suite 5080, Alexandria, VA 22314, or email at *PRAComments@ncua.gov.*

FOR FURTHER INFORMATION CONTACT: Copies of the submission may be obtained by contacting Mackie Malaka at (703) 548–2704, emailing *PRAComments@ncua.gov,* or viewing the entire information collection request at *www.reginfo.gov.*

SUPPLEMENTARY INFORMATION:

OMB Number: 3133–0033.

Type of Review: Extension of a currently approved collection.

Title: Security Program, 12 CFR part 748.

Abstract: In accordance with Title V of the Gramm-Leach-Bliley Act (15 U.S.C. 6801 *et seq.*), as implemented by 12 CFR part 748, federally-insured credit unions (FICU) are required to develop and implement a written security program to safeguard sensitive member information. This information collection requires that such programs be designed to respond to incidents of unauthorized access or use, in order to prevent substantial harm or serious inconvenience to members.

Affected Public: Private Sector: Not-for-profit institutions.

Estimated Total Annual Burden Hours: 382,176.

By Gerard Poliquin, Secretary of the Board, the National Credit Union Administration, on January 9, 2020.

Dated: January 9, 2020.

Mackie I. Malaka,

NCUA PRA Clearance Officer.

[FR Doc. 2020–00419 Filed 1–13–20; 8:45 am]

BILLING CODE 7535–01–P

NATIONAL FOUNDATION ON THE ARTS AND THE HUMANITIES

National Endowment for the Arts

Subject 30-Day Notice for the "USArtists International Program Information Collection"

AGENCY: National Endowment for the Arts, National Foundation on the Arts and the Humanities.

ACTION: Notice.

SUMMARY: The National Endowment for the Arts (NEA), as part of its continuing effort to reduce paperwork and respondent burden, conducts a preclearance consultation program to provide the general public and Federal agencies with an opportunity to comment on proposed and/or continuing collections of information in accordance with the Paperwork Reduction Act of 1995. This program helps to ensure that requested data can be provided in the desired format, reporting burden (time and financial resources) is minimized, collection instruments are clearly understood, and the impact of collection requirements on respondents can be properly assessed. Currently, the NEA is soliciting comments concerning the proposed information collection for the Survey of American Artists Participating in International Exchanges. Copies of this ICR, with applicable supporting documentation, may be obtained by visiting *www.Reginfo.gov.*

DATES: Written comments must be submitted to the office listed in the address section below within 30 days from the date of this publication in the **Federal Register**.

ADDRESSES: Comments should be sent to the Office of Information and Regulatory Affairs, Attn: OMB Desk Officer for the National Endowment for the Arts, Office of Management and Budget, Room 10235, Washington, DC 20503 202/395–7316, within 30 days from the date of this publication in the **Federal Register**.

SUPPLEMENTARY INFORMATION: The NEA is particularly interested in comments which:

- Evaluate whether the proposed collection of information is necessary for the proper performance of the functions of the agency, including whether the information will have practical utility;
- Evaluate the accuracy of the agency's estimate of the burden of the proposed collection of information including the validity of the methodology and assumptions used;
- Enhance the quality, utility, and clarity of the information to be collected; and
- Minimize the burden of the collection of information on those who are to respond, including through the use of appropriate automated, electronic, mechanical, or other technological collection techniques or other forms of information technology, *e.g.,* permitting electronic submissions of responses.

Agency: National Endowment for the Arts.

Title: Survey of American Artists Participating in International Exchanges.

OMB Number: New.

Frequency: One-Time Pilot Test and Annual Web Survey.

Affected Public: Artists with travel sponsored by the USArtists International program.

Estimated Number of Respondents: 414 (189 pilot test respondents + 75 survey respondents per year).

Total Burden Hours: 70.38 (32.13 in pilot test + 12.75 per survey year).

Total annualized capital/startup costs: 0.

Total annual costs (operating/maintaining systems or purchasing services): $9,879.15.

The planned data collection is a new information collection request, and the data to be collected are not available elsewhere unless obtained through this information collection. A web-based survey of the USAI program grantees is planned once annually for March 2021, March 2022, and March 2023. A pilot test of the web survey is planned for March 2020, contingent upon OMB approval. Knowledge gained through this information collection will enable the Arts Endowment to collect evidence on the impact of the USAI program on U.S. artists' careers. Currently, the Arts Endowment does not collect any information from USAI grantees related to the benefits of the program on their careers.

USAI is an international artist exchange program administered by the Mid Atlantic Arts Foundation. The Arts Endowment is the lead funder of the program and supports the program through a cooperative agreement with Mid Atlantic Arts Foundation. Additional supporting partners include the Andrew W. Mellon Foundation and the John D. and Catherine T. MacArthur Foundation which support artists from the Chicago area, and the Trust for Mutual Understanding and the Howard Gilman Foundation which support New York City-based organizations. It is the only national initiative in the United States solely devoted to supporting performances by American artists at important international cultural festivals and arts marketplaces abroad and is the largest of the Arts Endowment efforts supporting artists' performances abroad. USAI provides grants of up to $15,000 towards the support of artist fees, travel, accommodations, per diem, shipping, and visa preparation for U.S. artists. USAI provides grants to ensembles and individual performers in dance, music, and theatre.

Based on the Arts Endowment's FY 2018–2022 Strategic Plan (approved by OMB), the Arts Endowment decided to develop a survey of U.S. artists participating in international exchange programs to support performance reporting that shows ''Arts Endowment-supported international exchanges have a demonstrable benefit on the careers of participating American artists'' (performance goal 3.3.3) and ''the percentage of American artists that report benefits of their participation in Arts Endowment-supported international exchanges'' (performance indicator 3.3.3.1). The survey supports the agency's evidence-building efforts, to better understand outcomes associated with its investments. On page 26 of the Strategic Plan, the study is described as a specific evidence-building initiative supporting Strategic Objective 3.3:

The NEA intends to examine the impacts of these international exchanges on the careers of U.S. artists and on U.S. audiences who experience works originating from foreign artists as part of its evidence-building efforts. As an initial step, the NEA is investigating whether to plan a survey of U.S. artists participating in international exchanges with the goal of developing a richer understanding of the program's short- and longer-term impacts on their careers.

The Arts Endowment's Office of International Activities and Office of Research & Analysis decided to survey artist grantees of the USAI program because it is the largest of the Arts Endowment's efforts to support artists' travel and performances abroad and can provide the largest sample of artists to survey. The questions in the survey will capture five constructs related to artists' careers, including professional opportunities, professional networks, professional skills and learning, reputations, and creativity.

This request is for a conditional clearance to conduct pilot testing of a web survey and upon OMB receiving the results of the pilot study, a potential full clearance to conduct an annual survey of past USAI program participants once the survey has been piloted.

Dated: January 8, 2020.

Gregory Gendron,

Director of Administrative Services, National Endowment for the Arts.

[FR Doc. 2020–00362 Filed 1–13–20; 8:45 am]

BILLING CODE 7537–01–P

NUCLEAR REGULATORY COMMISSION

[NRC–2019–0253]

Proposed Revision to Standard Review Plan Branch Technical Position 7–19 Guidance for Evaluation of Potential Common Cause Failure Due to Latent Software Defects in Digital Instrumentation and Control Systems

AGENCY: Nuclear Regulatory Commission.

ACTION: Standard review plan; draft section revision; request for comment.

SUMMARY: The U.S. Nuclear Regulatory Commission (NRC) is soliciting public comment on draft NUREG–0800, ''Standard Review Plan for the Review of Safety Analysis Reports for Nuclear Power Plants: LWR Edition,'' Branch Technical Position (BTP) 7–19, ''Guidance for Evaluation of Potential Common Cause Failure Due to Latent Software Defects in Digital Instrumentation and Control Systems.''

DATES: Comments must be filed no later than March 16, 2020. Comments received after this date will be considered, if it is practical to do so, but the Commission is able to ensure consideration only for comments received on or before this date.

ADDRESSES: You may submit comments by any of the following methods:

- *Federal Rulemaking Website:* Go to *https://www.regulations.gov* and search for Docket ID NRC–2019–0253. Address questions about NRC dockets IDs in *Regulations.gov* to Jennifer Borges; telephone: 301–287–9127; email: *Jennifer.Borges@nrc.gov.* For technical questions, contact the individual listed in the **FOR FURTHER INFORMATION CONTACT** section of this document.
- *Mail comments to:* Office of Administration, Mail Stop: TWFN–7–A60M, U.S. Nuclear Regulatory Commission, Washington, DC 20555–0001, ATTN: Program Management, Announcements and Editing Staff.

For additional direction on obtaining information and submitting comments, see ''Obtaining Information and Submitting Comments'' in the **SUPPLEMENTARY INFORMATION** section of this document.

FOR FURTHER INFORMATION CONTACT: Mark Notich, Office of New Reactors, U.S. Nuclear Regulatory Commission, Washington, DC 20555–0001; telephone: 301–415–3053; email: *Mark.Notich@nrc.gov.*

SUPPLEMENTARY INFORMATION:

I. Obtaining Information and Submitting Comments

A. Obtaining Information

Please refer to Docket ID NRC–2019–0253 when contacting the NRC about the availability of information for this action. You may obtain publicly-available information related to this action by any of the following methods:

- *Federal Rulemaking Website:* Go to *https://www.regulations.gov* and search for Docket ID NRC–2019–0253.
- *NRC's Agencywide Documents Access and Management System (ADAMS):* You may obtain publicly-available documents online in the ADAMS Public Documents collection at *https://www.nrc.gov/reading-rm/adams.html.* To begin the search, select ''*Begin Web-based ADAMS Search.*'' For problems with ADAMS, please contact the NRC's Public Document Room (PDR) reference staff at 1–800–397–4209, 301–415–4737, or by email to *pdr.resource@nrc.gov.* The draft of NUREG–0800, ''Standard Review Plan for the Review of Safety Analysis Reports for Nuclear Power Plants: LWR Edition,'' BTP 7–19, ''Guidance for Evaluation of Potential Common Cause Failure in Digital Instrumentation and Control Systems'' is available in ADAMS under Accession No. ML19256B502.
- *NRC's PDR:* You may examine and purchase copies of public documents at the NRC's PDR, Room O1–F21, One White Flint North, 11555 Rockville Pike, Rockville, Maryland 20852.

B. Submitting Comments

Please include Docket ID NRC–2019–0253 in your comment submission.

The NRC cautions you not to include identifying or contact information that you do not want to be publicly disclosed in your comment submission. The NRC will post all comment submissions at *https://www.regulations.gov* as well as enter the comment submissions into ADAMS. The NRC does not routinely edit comment submissions to remove identifying or contact information.

If you are requesting or aggregating comments from other persons for submission to the NRC, then you should inform those persons not to include identifying or contact information that they do not want to be publicly disclosed in their comment submission. Your request should state that the NRC does not routinely edit comment submissions to remove such information before making the comment submissions available to the public or entering the comment into ADAMS.

II. Further Information

The NRC seeks public comment on the proposed draft revision of BTP 7–19. This BTP has been developed to assist NRC staff in the review of licensing applications involving digital technology that may be subject to common cause failures. Common cause failures have been identified as a type of hazard that digital instrumentation and control systems could be susceptible to due to the integration capabilities provided by the technology and due to its inherent complexity compared to analog technologies.

The proposed revision to BTP 7–19 provides a graded approach for addressing common cause failures due to latent defects based on the safety classification and safety significance of the proposed digital I&C structures, systems, and components (SSCs). For safety-related I&C SSCs that are safety significant, this proposed revision provides additional guidance for performing a defense-in-depth and diversity assessment. The guidance includes clarifications on acceptable means to eliminate common cause failures from further consideration and acceptable diverse means that can be used to perform the same or different function than the safety function disabled by the postulated common cause failures. For safety-related digital I&C SSCs that are not safety significant or digital I&C SSCs that are not safety-related but are safety significant, this proposed revision provides criteria on the performance of a qualitative assessment. This proposed revision also clarifies the criteria for performing a spurious operation assessment for digital I&C SSCs. The current version of BTP 7–19 can be found in ADAMS under Accession No. ML16019A344. The proposed Revision 8 to BTP 7–19 can be found in ADAMS under Accession No. ML19256B502.

The NRC staff presented proposed Revision 8 to BTP 7–19 to the Advisory Committee for Reactor Safeguards (ACRS) Subcommittee on November 21, 2019. Based on feedback received from ACRS Subcommittee members during the meeting, the NRC staff modified proposed Revision 8 to BTP 7–19 to enhance the structure of the BTP and to clarify the process descriptions for evaluating common-cause failure hazards. These modifications did not result in changes to the technical content of this BTP. Additional structural modifications and technical content clarifications may be necessary to improve this BTP. Therefore, the NRC staff is public comments to facilitate enhancing both the structure and the

technical content of this proposed BTP 7–19 revision.

Following NRC staff evaluation of public comments, the NRC intends to finalize BTP 7–19 Revision 8 in ADAMS and post it on the NRC's public website at *https://www.nrc.gov/reading-rm/doc-collections/nuregs/staff/sr0800/*. The SRP is guidance for the NRC staff. The SRP is not a substitute for the NRC regulations, and compliance with the SRP is not required.

III. Backfitting, Issue Finality, and Forward Fitting Discussion

Chapter 7 of the SRP provides guidance to the staff for reviewing information on instrumentation and controls in licensing applications. Issuance of this draft BTP, if finalized, would not constitute backfitting as defined in title 10 of the *Code of Federal Regulations* (10 CFR) 50.109 (the Backfit Rule) and as described in NRC Management Directive 8.4, ''Management of Backfitting, Forward Fitting, Issue Finality, and Information Requests;'' would not affect the issue finality of an approval under 10 CFR part 52; and would not constitute forward fitting as that term is defined and described in Management Directive 8.4. The staff's position is based upon the following considerations.

1. The draft BTP, if finalized, would not constitute backfitting or forward fitting or affect issue finality, inasmuch as the BTP would be internal guidance to NRC staff.

The BTP provides guidance to the staff on how to review an application for NRC regulatory approval in the form of licensing. Changes in internal staff guidance, without further NRC action, are not matters that meet the definition of backfitting or forward fitting or affect the issue finality of a part 52 approval.

2. Current or future applicants are not—with limited exceptions not applicable here—within the scope of the backfitting and issue finality regulations and forward fitting policy.

Applicants are not, with certain exceptions, covered by either the Backfit Rule or any issue finality provisions under 10 CFR part 52. This is because neither the Backfit Rule nor the issue finality provisions under 10 CFR part 52—with certain exclusions discussed below—were intended to apply to every NRC action which substantially changes the expectations of current and future applicants.

The exceptions to the general principle are applicable whenever an applicant references a 10 CFR part 52 license (*e.g.,* an early site permit) and/or NRC regulatory approval (*e.g.,* a design certification rule) with specified issue finality provisions or a construction permit under 10 CFR part 50. The staff does not, at this time, intend to impose the positions represented in the draft BTP (if finalized) in a manner that would constitute backfitting or affect the issue finality of a part 52 approval. If, in the future, the staff seeks to impose a position in the draft BTP (if finalized) in a manner that constitutes backfitting or does not provide issue finality as described in the applicable issue finality provision, then the staff would need to address the Backfit Rule or the criteria for avoiding issue finality as described in the applicable issue finality provision.

The staff does not, at this time, intend to impose the positions represented in the draft BTP (if finalized) in a manner that would constitute forward fitting. If, in the future, the staff seeks to impose a position in the draft BTP (if finalized) in a manner that constitutes forward fitting, then the staff would need to address the forward fitting criteria in Management Directive 8.4.

Dated at Rockville, Maryland, this 8th day of January, 2020.

For the Nuclear Regulatory Commission.

Dennis C. Morey,

Chief, Licensing Projects Branch, Division of Operating Reactor Licensing, Office of Nuclear Reactor Regulation.

[FR Doc. 2020–00350 Filed 1–13–20; 8:45 am]

BILLING CODE 7590–01–P

NUCLEAR REGULATORY COMMISSION

[Docket No. 50–293; NRC–2019–0244]

Holtec Pilgrim, LLC; Holtec Decommissioning International, LLC; Pilgrim Nuclear Power Station

AGENCY: Nuclear Regulatory Commission.

ACTION: Exemption; issuance.

SUMMARY: The U.S. Nuclear Regulatory Commission (NRC) has issued an exemption in response to a request from the licensee that would permit Holtec Pilgrim, LLC and Holtec Decommissioning International, LLC to reduce the minimum coverage limit for onsite property damage insurance from $1.06 billion to $50 million for Pilgrim Nuclear Power Station.

DATES: The exemption was issued on January 6, 2020.

ADDRESSES: Please refer to Docket ID NRC–2019–0244 when contacting the NRC about the availability of information regarding this document. You may obtain publicly-available information related to this document using any of the following methods:

- *Federal Rulemaking website:* Go to *https://www.regulations.gov* and search for Docket ID NRC–2019–0244. Address questions about NRC docket IDs in *Regulations.gov* to Jennifer Borges; telephone: 301–287–9127; email: *Jennifer.Borges@nrc.gov.* For technical questions, contact the individual listed in the **FOR FURTHER INFORMATION CONTACT** section of this document.
- *NRC's Agencywide Documents Access and Management System (ADAMS):* You may obtain publicly-available documents online in the ADAMS Public Documents collection at *https://www.nrc.gov/reading-rm/adams.html.* To begin the search, select ''Begin Web-based ADAMS Search.'' For problems with ADAMS, please contact the NRC's Public Document Room (PDR) reference staff at 1–800–397–4209, 301–415–4737, or by email to *pdr.resource@nrc.gov.* The ADAMS accession number for each document referenced (if it is available in ADAMS) is provided the first time that it is mentioned in this document.
- *NRC's PDR:* You may examine and purchase copies of public documents at the NRC's PDR, Room O1–F21, One White Flint North, 11555 Rockville Pike, Rockville, Maryland 20852.

FOR FURTHER INFORMATION CONTACT: Scott Wall, Office of Nuclear Reactor Regulation, U.S. Nuclear Regulatory Commission, Washington DC 20555–0001; telephone: 301–415–2855, email: *Scott.Wall@nrc.gov.*

SUPPLEMENTARY INFORMATION: The text of the exemption is attached.

Dated at Rockville, Maryland, this 9th day of January, 2020.

For the Nuclear Regulatory Commission.

Scott P. Wall,

Senior Project Manager, Plant Licensing Branch III, Division of Operating Reactor Licensing, Office of Nuclear Reactor Regulation.

Attachment—Exemption

NUCLEAR REGULATORY COMMISSION

Docket No. 50–293

Holtec Pilgrim, LLC

Holtec Decommissioning International, LLC

Pilgrim Nuclear Power Station

Exemption

I. Background

By letter dated November 10, 2015 (Agencywide Documents Access and Management System (ADAMS) Accession No. ML15328A053), Entergy

Nuclear Operations, Inc. (ENOI) certified to the U.S. Nuclear Regulatory Commission (NRC) that it planned to permanently cease power operations at Pilgrim Nuclear Power Station (Pilgrim) no later than June 1, 2019. On May 31, 2019, ENOI permanently ceased power operations at Pilgrim. By letter dated June 10, 2019 (ADAMS Accession No. ML19161A033), ENOI certified to the NRC that the fuel was permanenetly removed from the Pilgrim reactor vessel and placed in the spent fuel pool (SFP) on June 9, 2019. Accordingly, pursuant to Title 10 of the Code of Federal Regulations (10 CFR) Section 50.82(a)(2), the Pilgrim renewed facility operating license no longer authorizes operation of the reactor or emplacement or retention of fuel in the reactor vessel. The facility is still authorized to possess and store irradiated (*i.e.,* spent) nuclear fuel. Spent fuel is currently stored onsite at the Pilgrim facility in the SFP and in a dry cask independent spent fuel storage installation (ISFSI).

II. Request/Action

By letter dated March 25, 2019 (ADAMS Accession No. ML19088A050), as supplemented by letter dated July 30, 2019 (ADAMS Accession No. ML19211B509), ENOI requested an exemption from 10 CFR 50.54(w)(1) concerning onsite liability insurance. The exemption from 10 CFR 50.54(w)(1) would permit the licensee to reduce the required level of onsite property damage insurance from $1.06 billion to $50 million for Pilgrim.

By letter dated November 16, 2018 (ADAMS Accession No. ML18320A031), ENOI, on behalf of itself and Entergy Nuclear Generation Company (ENGC) (to be known as Holtec Pilgrim, LLC), Holtec International (Holtec), and Holtec Decommissioning International, LLC (HDI, the licensee) (together, Applicants), requested that the NRC consent to: (1) The indirect transfer of control of Renewed Facility Operating License No. DPR–35 for Pilgrim, as well as the general license for the Pilgrim ISFSI (together, the Licenses), to Holtec; and (2) the direct transfer of ENOI's operating authority (*i.e.,* its authority to conduct licensed activities at Pilgrim) to HDI. In addition, the Applicants requested that the NRC approve a conforming administrative amendment to the Licenses to reflect the proposed direct transfer of the Licenses from ENOI to HDI; a planned name change for ENGC from ENGC to Holtec Pilgrim, LLC; and deletion of certain license conditions to reflect satisfaction and termination of all ENGC obligations after the license transfer and equity sale.

By Order dated August 22, 2019 (ADAMS Accession No. ML19170A265), the NRC staff approved the direct and indirect transfers requested in the November 16, 2018 application. Additionally, on August 22, 2019, HDI informed the NRC (ADAMS Accession No. ML19234A357) that:

HDI will assume responsibility for all ongoing NRC regulatory actions and reviews currently underway for Pilgrim Nuclear Power Station. HDI respectfully requests NRC continuation of these regulatory actions and reviews.

On August 26, 2019, ENOI informed the NRC that the license transfer transaction closed on August 26, 2019 (ADAMS Accession No. ML19239A037). On August 27, 2019 (ADAMS Accession No. ML19235A050), the NRC staff issued Amendment No. 249 to reflect the license transfer. Accordingly, HDI is now the licensee for decommissioning operations at Pilgrim.

The regulation at 10 CFR 50.54(w)(1) requires each licensee to have and maintain onsite property damage insurance to stabilize and decontaminate the reactor and reactor site in the event of an accident. The onsite insurance coverage must be either $1.06 billion or whatever amount of insurance is generally available from private sources (whichever is less).

The licensee states that the risk of an incident at a permanently shutdown and defueled reactor is much less than the risk from an operating power reactor. In addition, since reactor operation is no longer authorized at Pilgrim, there are no events that would require the stabilization of reactor conditions after an accident. Similarly, the risk of an accident that would result in significant onsite contamination at Pilgrim is also much lower than the risk of such an event at operating reactors. Therefore, the licensee requested an exemption from 10 CFR 50.54(w)(1) to reduce its onsite property damage insurance from $1.06 billion to $50 million, commensurate with the reduced risk of an incident at the permanently shutdown and defueled Pilgrim site.

III. Discussion

Under 10 CFR 50.12, the Commission may, upon application by any interested person or upon its own initiative, grant exemptions from the requirements of 10 CFR part 50 when (1) the exemptions are authorized by law, will not present an undue risk to public health or safety, and are consistent with the common defense and security; and (2) any of the special circumstances listed in 10 CFR 50.12(a)(2) are present.

The financial protection limits of 10 CFR 50.54(w)(1) were established after the Three Mile Island accident out of concern that licensees may be unable to financially cover onsite cleanup costs in the event of a major nuclear accident. The specified $1.06 billion coverage amount requirement was developed based on an analysis of an accident at a nuclear reactor operating at power resulting in a large fission product release and requiring significant resource expenditures to stabilize the reactor and ultimately decontaminate and cleanup the site.

These cost estimates were developed based on the spectrum of postulated accidents for an operating nuclear reactor. Those costs were derived from the consequences of a release of radioactive material from the reactor. Although the risk of an accident at an operating reactor is very low, the consequences onsite and offsite can be significant. In an operating plant, the high temperature and pressure of the reactor coolant system (RCS), as well as the inventory of relatively short-lived radionuclides, contribute to both the risk and consequences of an accident. With the permanent cessation of reactor operations at Pilgrim and the permanent removal of the fuel from the reactor vessel, such accidents are no longer possible. As a result, the reactor vessel, RCS, and supporting systems no longer operate and have no function related to the storage of the irradiated fuel. Therefore, postulated accidents involving failure or malfunction of the reactor, RCS, or supporting systems are no longer applicable.

During reactor decommissioning, the largest radiological risks are associated with the storage of spent fuel onsite. In the exemption request dated March 25, 2019, as supplemented by letter dated July 30, 2019, the licensee discussed both design-basis and beyond design-basis events involving irradiated fuel stored in the SFP. The licensee determined that there are no possible design-basis events at Pilgrim that could result in an offsite radiological release exceeding the limits established by the U.S. Environmental Protection Agency's (EPA) early phase Protective Action Guides (PAGs) of 1 roentgen equivalent man (rem) at the exclusion area boundary, as a way to demonstrate that any possible radiological releases would be minimal and would not require precautionary protective actions (*e.g.,* sheltering in place or evacuation). The NRC staff evaluated the radiological consequences associated with various decommissioning activities and the design-basis accidents at Pilgrim, in consideration of a permanently

shutdown and defueled condition. The possible design-basis accident scenarios at Pilgrim have greatly reduced radiological consequences. Based on its review, the NRC staff concluded that no reasonably conceivable design-basis accident exists that could cause an offsite release greater than the EPA PAGs.

The only incident that might lead to a significant radiological release at a decommissioning reactor is a zirconium fire. The zirconium fire scenario is a postulated, but highly unlikely, beyond design-basis accident scenario that involves loss of water inventory from the SFP resulting in a significant heatup of the spent fuel, and culminating in substantial zirconium cladding oxidation and fuel damage. The probability of a zirconium fire scenario is related to the decay heat of the irradiated fuel stored in the SFP. Therefore, the risks from a zirconium fire scenario continue to decrease as a function of the time since Pilgrim has been permanently shut down.

The Commission has previously authorized a lesser amount of onsite financial protection, based on this analysis of the zirconium fire risk. In SECY–96–256, ''Changes to Financial Protection Requirements for Permanently Shutdown Nuclear Power Reactors, 10 CFR 50.54(w) and 10 CFR 140.11,'' dated December 17, 1996 (ADAMS Accession No. ML15062A483), the NRC staff recommended changes to the power reactor financial protection regulations that would allow licensees to lower onsite insurance levels to $50 million upon demonstration that the fuel stored in the SFP can be air-cooled. In its Staff Requirements Memorandum to SECY–96–256, dated January 28, 1997 (ADAMS Accession No. ML15062A454), the Commission supported the NRC staff's recommendation that, among other things, would allow permanently shut down power reactor licensees to reduce commercial onsite property damage insurance coverage to $50 million when the licensee was able to demonstrate the technical criterion that the spent fuel could be air-cooled if the SFP was drained of water.

The NRC staff has used this technical criterion to grant similar exemptions to other decommissioning reactors (*e.g.,* Maine Yankee Atomic Power Station, published in the **Federal Register** on January 19, 1999 (64 FR 2920); Zion Nuclear Power Station, published in the **Federal Register** on December 28, 1999 (64 FR 72700); Kewaunee Power Station, published in the **Federal Register** on March 24, 2015 (80 FR 15638); Crystal River Unit 3 Nuclear Generation Plant, published in the **Federal Register** on May 6, 2015 (80 FR 26100); and Oyster Creek Nuclear Generating Station, published in the **Federal Register** on December 28, 2018 (83 FR 67365)). These prior exemptions were based on these licensees demonstrating that the SFP could be air-cooled, consistent with the technical criterion discussed above.

By letter dated July 30, 2019 (ADAMS Accession No. ML19211B509), ENOI provided a supplement to its exemption request addressing air-cooling of fuel in a drained pool. In the attachment to this letter, the licensee compared Pilgrim fuel storage parameters with those used in NRC generic evaluations of fuel cooling included in NUREG/CR–6451, ''A Safety and Regulatory Assessment of Generic BWR [Boiling-Water Reactor] and PWR [Pressurized-Water Reactor] Permanently Shutdown Nuclear Power Plants,'' dated August 1997 (ADAMS Accession No. ML082260098). The analysis described in NUREG/CR–6451 determined that natural air circulation would adequately cool fuel that has decayed for 7 months after operation in a typical BWR. The licensee compared the post-shutdown fuel storage conditions with those assumed for the analysis presented in NUREG/CR–6451. The licensee found that the Pilgrim fuel storage configuration is nearly identical to the representative configuration used in the NUREG/CR–6451 analysis with respect to the fuel assembly size, the fuel storage pitch, the rack material, and the rack orifice size being larger than the BWR fuel assembly inlet nozzle size. Thus, the cooling air flow should be comparable. However, although the Pilgrim final cycle fuel operated at a lower power density, it achieved a higher total burnup than assumed for the NUREG/CR–6451 analysis. The licensee determined that the higher decay heat resulting from the increased burnup would be offset by the longer decay time (*i.e.,* 10 months) at the effective date of the requested exemption as compared to the decay time used in the NUREG/CR–6451 analysis (*i.e.,* 7 months), which results in a lower total decay heat rate. Therefore, at 10 months after permanent shutdown (*i.e.,* the effective date of the requested exemption), the NRC staff has reasonable assurance that fuel stored in the Pilgrim SFP would be adequately air-cooled in the unlikely event the SFP completely drained.

In SECY–00–0145, ''Integrated Rulemaking Plan for Nuclear Power Plant Decommissioning,'' dated June 28, 2000, and SECY–01–0100, ''Policy Issues Related to Safeguards, Insurance, and Emergency Preparedness Regulations at Decommissioning Nuclear Power Plants Storing Fuel in the Spent Fuel Pool,'' dated June 4, 2001 (ADAMS Accession Nos. ML003721626 and ML011450420, respectively), the NRC staff discussed additional information concerning SFP zirconium fire risks at decommissioning reactors and associated implications for onsite property damage insurance. Providing an analysis of when the spent fuel stored in the SFP is capable of air-cooling is one measure that can be used to demonstrate that the probability of a zirconium fire is exceedingly low. However, the NRC staff has more recently used an additional analysis that bounds an incomplete drain down of the SFP water, or some other catastrophic event (such as a complete drainage of the SFP with rearrangement of spent fuel rack geometry and/or the addition of rubble to the SFP). The analysis postulates that decay heat transfer from the spent fuel via conduction, convection, or radiation would be impeded. This analysis is often referred to as an adiabatic heatup.

The licensee's adiabatic heatup analyses demonstrate that there would be at least 10 hours after the loss of all means of cooling (both air and/or water), before the spent fuel cladding would reach a temperature where the potential for a significant offsite radiological release could occur. The licensee states that for this loss of all cooling scenario, 10 hours is sufficient time for personnel to respond with additional resources, equipment, and capability to restore cooling to the SFPs, even after a non-credible, catastrophic event.

In the analysis provided in Attachment 2, ''Calculation No. PNPS–EC–81416–M1418, Adiabatic Heatup Analysis for Drained Spent Fuel Pool,'' to the letter dated February 18, 2019 (ADAMS Accession No. ML19056A260), the licensee compared the conditions for the hottest fuel assembly stored in the SFP to a criterion proposed in SECY–99–168, ''Improving Decommissioning Regulations for Nuclear Power Plants,'' dated June 30, 1999 (ADAMS Accession No. ML12265A598), applicable to offsite emergency response for the unit in the decommissioning process. This criterion considers the time for the hottest assembly to heat up from 30 degrees Celsius (°C) to 900 °C adiabatically. If the heatup time is greater than 10 hours, then offsite emergency preplanning involving the plant is not necessary. Based on the limiting fuel assembly for decay heat and adiabatic heatup analysis presented in Attachment 2 to the February 18, 2019 letter, at 10

months after permanent cessation of power operations (*i.e.,* 10 months of decay time), the time for the hottest fuel assembly to reach 900 °C is 10 hours after the assemblies have been uncovered. As stated in NUREG–1738, ''Technical Study of Spent Fuel Pool Accident Risk at Decommissioning Nuclear Power Plants,'' dated February 2001 (ADAMS Accession No. ML010430066), 900 °C is an acceptable temperature to use for assessing onset of fission product release under transient conditions to establish the critical decay time for determining the availability of 10 hours for deployment of mitigation equipment and, if necessary, for offsite agencies to take appropriate action to protect the health and safety of the public if fuel and cladding oxidation occurs in air.

The NRC staff reviewed the calculation to verify that important physical properties of materials were within acceptable ranges and the results were accurate. The NRC staff determined that physical properties were appropriate. Therefore, the NRC staff found that 10 months after permanent cessation of power operations, more than 10 hours would be available before a significant offsite release could begin. The NRC staff concluded that the adiabatic heatup calculation provided an acceptable method for determining the minimum time available for deployment of mitigation equipment and, if necessary, implementing measures under a comprehensive general emergency plan.

The NRC staff performed an evaluation of the design-basis accidents for Pilgrim being permanently defueled as part of SECY–19–0078, ''Request by Entergy Nuclear Operations, Inc. for Exemptions from Certain Emergency Planning Requirements for the Pilgrim Nuclear Power Station,'' dated August 9, 2019 (ADAMS Accession No. ML18347A717).

Based on the evaluation in SECY–19–0078 and SECY–96–256, the NRC staff determined $50 million to be an adequate level of onsite property damage insurance for a decommissioning reactor once the spent fuel in the SFP is no longer susceptible to a zirconium fire. The NRC staff has postulated that there is still a potential for other radiological incidents at a decommissioning reactor that could result in significant onsite contamination besides a zirconium fire. In SECY–96–256, the NRC staff cited the rupture of a large contaminated liquid storage tank (~450,000 gallon) causing soil contamination and potential groundwater contamination as the most costly postulated event to decontaminate and remediate (other than an SFP zirconium fire). The postulated large liquid radiological waste storage tank rupture event was determined to have a bounding onsite cleanup cost of approximately $50 million. Therefore, the NRC staff determined that the licensee's proposal to reduce onsite insurance to a level of $50 million would be consistent with the bounding cleanup and decontamination cost, as discussed in SECY–96–256, to account for the postulated rupture of a large liquid radiological waste tank at the Pilgrim site, should such an event occur.

The NRC staff has determined that the licensee's proposed reduction in onsite property damage insurance coverage to a level of $50 million is consistent with SECY–96–256 and subsequent insurance considerations resulting from additional zirconium fire risks as discussed in SECY–00–0145 and SECY–01–0100. In addition, the NRC staff notes that similar exemptions have been granted to other permanently shut down and defueled power reactors, upon demonstration that the criterion of the zirconium fire risks from the irradiated fuel stored in the SFP is of negligible concern. As previously stated, the NRC staff concluded that 10 months after the permanent cessation of power operations on May 31, 2019, sufficient irradiated fuel decay time will have elapsed at Pilgrim to decrease the probability of an onsite radiological release from a postulated zirconium fire accident to negligible levels. In addition, the licensee's proposal to reduce onsite insurance to a level of $50 million is consistent with the maximum estimated cleanup costs for the recovery from the rupture of a large liquid radwaste storage tank.

The NRC staff also notes that in accordance with the Pilgrim Post-Shutdown Decommissioning Activities Report (PSDAR) dated November 16, 2018 (ADAMS Accession No. ML18320A040), all spent fuel will be removed from the SFP and moved into dry storage at an onsite ISFSI by the end of 2021, and the probability of an initiating event that would threaten SFP integrity occurring before that time is extremely low, which further supports the conclusion that the zirconium fire risk is negligible.

A. The Exemption is Authorized by Law

The requested exemption from 10 CFR 50.54(w)(1) would allow Holtec Pilgrim and HDI to reduce the minimum coverage limit for onsite property damage insurance. As stated above, 10 CFR 50.12 allows the NRC to grant exemptions from the requirements of 10 CFR part 50 when the exemptions are authorized by law.

As explained above, the NRC staff has determined that the licensee's proposed reduction in onsite property damage insurance coverage to a level of $50 million is consistent with SECY–96–256. Moreover, the NRC staff concluded that 10 months after the permanent cessation of power operations, sufficient irradiated fuel decay time will have elapsed at Pilgrim to decrease the probability of an onsite and offsite radiological release from a postulated zirconium fire accident to negligible levels. In addition, the licensee's proposal to reduce onsite insurance to a level of $50 million is consistent with the maximum estimated cleanup costs for the recovery from the rupture of a large liquid radiological waste storage tank.

The NRC staff has determined that granting the licensee's proposed exemption will not result in a violation of the Atomic Energy Act of 1954, as amended, or the Commission's regulations. Therefore, based on its review of the licensee's exemption request as discussed above, and consistent with SECY–96–256, the NRC staff concludes that the exemption is authorized by law.

B. The Exemption Presents No Undue Risk to the Public Health and Safety

The onsite property damage insurance requirements of 10 CFR 50.54(w)(1) were established to provide financial assurance that following a significant nuclear incident, onsite conditions could be stabilized and the site decontaminated. The requirements of 10 CFR 50.54(w)(1) and the existing level of onsite insurance coverage for Pilgrim are predicated on the assumption that the reactor is operating. However, Pilgrim permanently shut down on May 31, 2019, and defueled on June 10, 2019. The permanently shutdown and defueled status of the facility results in a significant reduction in the number and severity of potential accidents and, correspondingly, a significant reduction in the potential for and severity of onsite property damage. The proposed reduction in the amount of onsite insurance coverage does not impact the probability or consequences of potential accidents. The proposed level of insurance coverage is commensurate with the reduced consequences of potential nuclear accidents at Pilgrim. Therefore, the NRC staff concludes that granting the requested exemption will not present an undue risk to the health and safety of the public.

C. The Exemption Is Consistent With the Common Defense and Security

The proposed exemption would not eliminate any requirements associated with physical protection of the site and would not adversely affect the licensee's ability to physically secure the site or protect special nuclear material. Physical security measures at Pilgrim are not affected by the requested exemption. Therefore, the proposed exemption is consistent with the common defense and security.

D. Special Circumstances

Special circumstances, in accordance with 10 CFR 50.12(a)(2)(ii), are present whenever application of the regulation in the particular circumstances is not necessary to achieve the underlying purpose of the regulation.

The underlying purpose of 10 CFR 50.54(w)(1) is to provide reasonable assurance that adequate funds will be available to stabilize reactor conditions and cover onsite cleanup costs associated with site decontamination following an accident that results in the release of a significant amount of radiological material. Since Pilgrim permanently shut down on May 31, 2019, and defueled on June 10, 2019, it is no longer possible for the radiological consequences of design-basis accidents or other credible events at Pilgrim to exceed the limits of the EPA PAGs at the exclusion area boundary. The licensee has evaluated the consequences of highly unlikely, beyond-design-basis conditions involving a loss of coolant from the SFP. The analyses show that 10 months after the permanent cessation of power operations on May 31, 2019, the likelihood of such an event leading to a large radiological release is negligible. The NRC staff's evaluation of the licensee's analyses confirm this conclusion.

The NRC staff also finds that the licensee's proposed $50 million level of onsite insurance is consistent with the bounding cleanup and decontamination cost as discussed in SECY–96–256, to account for the hypothetical rupture of a large liquid radiological waste tank at the Pilgrim site, should such an event occur. Therefore, the NRC staff concludes that the application of the current requirements in 10 CFR 50.54(w)(1) to maintain $1.06 billion in onsite insurance coverage is not necessary to achieve the underlying purpose of the rule for the permanently shutdown and defueled Pilgrim reactor.

Under 10 CFR 50.12(a)(2)(iii), special circumstances are present whenever compliance would result in undue hardship or other costs that are significantly in excess of those contemplated when the regulation was adopted, or that are significantly in excess of those incurred by others similarly situated.

The NRC staff concludes that if the licensee was required to continue to maintain an onsite insurance level of $1.06 billion, the associated insurance premiums would be in excess of those necessary and commensurate with the radiological contamination risks posed by the site. In addition, such insurance levels would be significantly in excess of other decommissioning reactor facilities that have been granted similar exemptions by the NRC.

The NRC staff finds that compliance with the existing rule would result in an undue hardship or other costs that are significantly in excess of those contemplated when the regulation was adopted and are significantly in excess of those incurred by others similarly situated.

Therefore, the special circumstances required by 10 CFR 50.12(a)(2)(ii) and 10 CFR 50.12(a)(2)(iii) exist.

E. Environmental Considerations

The NRC's approval of an exemption from insurance or indemnity requirements belongs to a category of actions that the Commission, by rule or regulation, has declared to be a categorical exclusion after first finding that the category of actions does not individually or cumulatively have a significant effect on the human environment. Specifically, the exemption is categorically excluded from the requirement to prepare an environmental assessment or environmental impact statement in accordance with 10 CFR 51.22(c)(25).

Under 10 CFR 51.22(c)(25), granting of an exemption from the requirements of any regulation of Chapter I to 10 CFR is a categorical exclusion provided that: (i) There is no significant hazards consideration; (ii) there is no significant change in the types or significant increase in the amounts of any effluents that may be released offsite; (iii) there is no significant increase in individual or cumulative public or occupational radiation exposure; (iv) there is no significant construction impact; (v) there is no significant increase in the potential for or consequences from radiological accidents; and (vi) the requirements from which an exemption is sought involve surety, insurance, or indemnity requirements.

As the Director, Division of Operating Reactor Licensing, Office of Nuclear Reactor Regulation, I have determined that approval of the exemption request involves no significant hazards consideration, as defined in 10 CFR 50.92, because reducing the licensee's onsite property damage insurance for Pilgrim does not: (1) Involve a significant increase in the probability or consequences of an accident previously evaluated; (2) create the possibility of a new or different kind of accident from any accident previously evaluated; or (3) involve a significant reduction in a margin of safety. The exempted financial protection regulation is unrelated to the operation of Pilgrim or site activities. Accordingly, there is no significant change in the types or significant increase in the amounts of any effluents that may be released offsite and no significant increase in individual or cumulative public or occupational radiation exposure. The exempted regulation is not associated with construction so there is no significant construction impact. The exempted regulation does not concern the source term (*i.e.,* potential amount of radiation in an accident) nor any activities conducted at the site. Therefore, there is no significant increase in the potential for, or consequences of, a radiological accident. In addition, there would be no significant impacts to biota, water resources, historic properties, cultural resources, or socioeconomic conditions in the region resulting from issuance of the requested exemption. The requirement for onsite property damage insurance involves surety, insurance, and indemnity matters only.

Therefore, pursuant to 10 CFR 51.22(b) and 51.22(c)(25), no environmental impact statement or environmental assessment need be prepared in connection with the approval of this exemption request.

IV. Conclusions

Accordingly, the Commission has determined that, pursuant to 10 CFR 50.12(a), the exemption is authorized by law, will not present an undue risk to the public health and safety, and is consistent with the common defense and security. Also, special circumstances are present as set forth in 10 CFR 50.12.

Therefore, the Commission hereby grants Holtec Pilgrim and HDI an exemption from the requirements of 10 CFR 50.54(w)(1) for Pilgrim. Pilgrim permanently ceased power operations on May 31, 2019. The exemption permits Pilgrim to lower the minimum required onsite insurance to $50 million 10 months after permanent cessation of power operations.

The exemption is effective as of 10 months after permanent cessation of power operations.

Dated at Rockville, Maryland, this 6th day of January 2020.

For the Nuclear Regulatory Commission.
/RA/
Craig G. Erlanger,
Director, Division of Operating Reactor Licensing,
Office of Nuclear Reactor Regulation.
[FR Doc. 2020–00416 Filed 1–13–20; 8:45 am]

BILLING CODE 7590–01–P

NUCLEAR REGULATORY COMMISSION

[NRC–2020–0017]

Biweekly Notice; Applications and Amendments to Facility Operating Licenses and Combined Licenses Involving No Significant Hazards Considerations

AGENCY: Nuclear Regulatory Commission.

ACTION: Biweekly notice.

SUMMARY: Pursuant to section 189.a.(2) of the Atomic Energy Act of 1954, as amended (the Act), the U.S. Nuclear Regulatory Commission (NRC) is publishing this regular biweekly notice. The Act requires the Commission to publish notice of any amendments issued, or proposed to be issued, and grants the Commission the authority to issue and make immediately effective any amendment to an operating license or combined license, as applicable, upon a determination by the Commission that such amendment involves no significant hazards consideration, notwithstanding the pendency before the Commission of a request for a hearing from any person. This biweekly notice includes all amendments issued, or proposed to be issued, from December 17, 2019, to December 30, 2019. This notice also incorporates the revised biweekly format as noticed in the **Federal Register** on December 3, 2019. The last biweekly notice was published on December 31, 2019.

DATES: Comments must be filed by February 13, 2020. A request for a hearing or petitions for leave to intervene must be filed by March 16, 2020.

ADDRESSES: You may submit comments by any of the following methods (unless this document describes a different method for submitting comments on a specific subject):

- *Federal Rulemaking Website:* Go to *https://www.regulations.gov* and search for Docket ID NRC–2020–0017. Address questions about NRC Docket IDs in *Regulations.gov* to Jennifer Borges; telephone: 301–287–9127; email: *Jennifer.Borges@nrc.gov.* For technical questions, contact the individual listed in the **FOR FURTHER INFORMATION CONTACT** section of this document.
- *Mail comments to:* Office of Administration, Mail Stop: TWFN–7–A60M, U.S. Nuclear Regulatory Commission, Washington, DC 20555–0001, ATTN: Program Management, Announcements and Editing Staff.

For additional direction on obtaining information and submitting comments, see ''Obtaining Information and Submitting Comments'' in the **SUPPLEMENTARY INFORMATION** section of this document.

FOR FURTHER INFORMATION CONTACT: Lynn Ronewicz, Office of Nuclear Reactor Regulation, 301–415–1927, email: *Lynn.Ronewicz@nrc.gov,* U.S. Nuclear Regulatory Commission, Washington, DC 20555–0001.

SUPPLEMENTARY INFORMATION:

I. Obtaining Information and Submitting Comments

A. Obtaining Information

Please refer to Docket ID NRC–2020–0017, when contacting the NRC about the availability of information for this action. You may obtain publicly-available information related to this action by any of the following methods:

- *Federal Rulemaking Website:* Go to *https://www.regulations.gov* and search for Docket ID NRC–2020–0017.
- *NRC's Agencywide Documents Access and Management System (ADAMS):* You may obtain publicly-available documents online in the ADAMS Public Documents collection at *https://www.nrc.gov/reading-rm/adams.html.* To begin the search, select ''*Begin Web-based ADAMS Search.*'' For problems with ADAMS, please contact the NRC's Public Document Room (PDR) reference staff at 1–800–397–4209, 301–415–4737, or by email to *pdr.resource@nrc.gov.* For the convenience of the reader, instructions about obtaining materials referenced in this document are provided in the ''Availability of Documents'' section.
- *NRC's PDR:* You may examine and purchase copies of public documents at the NRC's PDR, Room O1–F21, One White Flint North, 11555 Rockville Pike, Rockville, Maryland 20852.

B. Submitting Comments

Please include Docket ID NRC–2020–0017, facility name, unit nos. docket no., application date, and subject, in your comment submission.

The NRC cautions you not to include identifying or contact information that you do not want to be publicly disclosed in your comment submission. The NRC will post all comment submissions at *https://www.regulations.gov* as well as enter the comment submissions into ADAMS. The NRC does not routinely edit comment submissions to remove identifying or contact information.

If you are requesting or aggregating comments from other persons for submission to the NRC, then you should inform those persons not to include identifying or contact information that they do not want to be publicly disclosed in their comment submission. Your request should state that the NRC does not routinely edit comment submissions to remove such information before making the comment submissions available to the public or entering the comment into ADAMS.

II. Notice of Consideration of Issuance of Amendments to Facility Operating Licenses and Combined Licenses and Proposed No Significant Hazards Consideration Determination

For the facility-specific amendment requests shown below, the Commission finds that the licensee's analyses provided, consistent with title 10 of the *Code of Federal Regulations* (10 CFR) Section 50.91 is sufficient to support the proposed determination that these amendment requests involve No Significant Hazards Consideration (NSHC). Under the Commission's regulations in 10 CFR 50.92, operation of the facility in accordance with the proposed amendment would not (1) involve a significant increase in the probability or consequences of an accident previously evaluated, or (2) create the possibility of a new or different kind of accident from any accident previously evaluated; or (3) involve a significant reduction in a margin of safety.

The Commission is seeking public comments on this proposed determination. Any comments received within 30 days after the date of publication of this notice will be considered in making any final determination.

Normally, the Commission will not issue the amendment until the expiration of 60 days after the date of publication of this notice. The Commission may issue the license amendment before expiration of the 60-day period provided that its final determination is that the amendment involves NSHC. In addition, the Commission may issue the amendment prior to the expiration of the 30-day comment period if circumstances change during the 30-day comment period such that failure to act in a timely way would result, for example in

derating or shutdown of the facility. If the Commission takes action prior to the expiration of either the comment period or the notice period, it will publish in the **Federal Register** a notice of issuance. If the Commission makes a final NSHC determination, any hearing will take place after issuance. The Commission expects that the need to take action on an amendment before 60 days have elapsed will occur very infrequently.

A. Opportunity to Request a Hearing and Petition for Leave To Intervene

Within 60 days after the date of publication of this notice, any persons (petitioner) whose interest may be affected by this action may file a request for a hearing and petition for leave to intervene (petition) with respect to the action. Petitions shall be filed in accordance with the Commission's ''Agency Rules of Practice and Procedure'' in 10 CFR part 2. Interested persons should consult a current copy of 10 CFR 2.309. The NRC's regulations are accessible electronically from the NRC Library on the NRC's website at *https://www.nrc.gov/reading-rm/doc-collections/cfr/.* Alternatively, a copy of the regulations is available at the NRC's Public Document Room, located at One White Flint North, Room O1–F21, 11555 Rockville Pike (first floor), Rockville, Maryland 20852. If a petition is filed, the Commission or a presiding officer will rule on the petition and, if appropriate, a notice of a hearing will be issued.

As required by 10 CFR 2.309(d) the petition should specifically explain the reasons why intervention should be permitted with particular reference to the following general requirements for standing: (1) The name, address, and telephone number of the petitioner; (2) the nature of the petitioner's right under the Act to be made a party to the proceeding; (3) the nature and extent of the petitioner's property, financial, or other interest in the proceeding; and (4) the possible effect of any decision or order which may be entered in the proceeding on the petitioner's interest.

In accordance with 10 CFR 2.309(f), the petition must also set forth the specific contentions which the petitioner seeks to have litigated in the proceeding. Each contention must consist of a specific statement of the issue of law or fact to be raised or controverted. In addition, the petitioner must provide a brief explanation of the bases for the contention and a concise statement of the alleged facts or expert opinion which support the contention and on which the petitioner intends to rely in proving the contention at the hearing. The petitioner must also provide references to the specific sources and documents on which the petitioner intends to rely to support its position on the issue. The petition must include sufficient information to show that a genuine dispute exists with the applicant or licensee on a material issue of law or fact. Contentions must be limited to matters within the scope of the proceeding. The contention must be one which, if proven, would entitle the petitioner to relief. A petitioner who fails to satisfy the requirements at 10 CFR 2.309(f) with respect to at least one contention will not be permitted to participate as a party.

Those permitted to intervene become parties to the proceeding, subject to any limitations in the order granting leave to intervene. Parties have the opportunity to participate fully in the conduct of the hearing with respect to resolution of that party's admitted contentions, including the opportunity to present evidence, consistent with the NRC's regulations, policies, and procedures.

Petitions must be filed no later than 60 days from the date of publication of this notice. Petitions and motions for leave to file new or amended contentions that are filed after the deadline will not be entertained absent a determination by the presiding officer that the filing demonstrates good cause by satisfying the three factors in 10 CFR 2.309(c)(1)(i) through (iii). The petition must be filed in accordance with the filing instructions in the ''Electronic Submissions (E-Filing)'' section of this document.

If a hearing is requested, and the Commission has not made a final determination on the issue of no significant hazards consideration, the Commission will make a final determination on the issue of no significant hazards consideration. The final determination will serve to establish when the hearing is held. If the final determination is that the amendment request involves no significant hazards consideration, the Commission may issue the amendment and make it immediately effective, notwithstanding the request for a hearing. Any hearing would take place after issuance of the amendment. If the final determination is that the amendment request involves a significant hazards consideration, then any hearing held would take place before the issuance of the amendment unless the Commission finds an imminent danger to the health or safety of the public, in which case it will issue an appropriate order or rule under 10 CFR part 2.

A State, local governmental body, Federally-recognized Indian Tribe, or agency thereof, may submit a petition to the Commission to participate as a party under 10 CFR 2.309(h)(1). The petition should state the nature and extent of the petitioner's interest in the proceeding. The petition should be submitted to the Commission no later than 60 days from the date of publication of this notice. The petition must be filed in accordance with the filing instructions in the ''Electronic Submissions (E-Filing)'' section of this document, and should meet the requirements for petitions set forth in this section, except that under 10 CFR 2.309(h)(2) a State, local governmental body, or Federally-recognized Indian Tribe, or agency thereof does not need to address the standing requirements in 10 CFR 2.309(d) if the facility is located within its boundaries. Alternatively, a State, local governmental body, Federally-recognized Indian Tribe, or agency thereof may participate as a non-party under 10 CFR 2.315(c).

If a hearing is granted, any person who is not a party to the proceeding and is not affiliated with or represented by a party may, at the discretion of the presiding officer, be permitted to make a limited appearance pursuant to the provisions of 10 CFR 2.315(a). A person making a limited appearance may make an oral or written statement of his or her position on the issues but may not otherwise participate in the proceeding. A limited appearance may be made at any session of the hearing or at any prehearing conference, subject to the limits and conditions as may be imposed by the presiding officer. Details regarding the opportunity to make a limited appearance will be provided by the presiding officer if such sessions are scheduled.

B. Electronic Submissions (E-Filing)

All documents filed in NRC adjudicatory proceedings, including a request for hearing and petition for leave to intervene (petition), any motion or other document filed in the proceeding prior to the submission of a request for hearing or petition to intervene, and documents filed by interested governmental entities that request to participate under 10 CFR 2.315(c), must be filed in accordance with the NRC's E-Filing rule (72 FR 49139; August 28, 2007, as amended at 77 FR 46562; August 3, 2012). The E-Filing process requires participants to submit and serve all adjudicatory documents over the internet, or in some cases to mail copies on electronic storage media. Detailed guidance on making electronic submissions may be

found in the Guidance for Electronic Submissions to the NRC and on the NRC website at *https://www.nrc.gov/site-help/e-submittals.html.* Participants may not submit paper copies of their filings unless they seek an exemption in accordance with the procedures described below.

To comply with the procedural requirements of E-Filing, at least 10 days prior to the filing deadline, the participant should contact the Office of the Secretary by email at *hearing.docket@nrc.gov,* or by telephone at 301–415–1677, to (1) request a digital identification (ID) certificate, which allows the participant (or its counsel or representative) to digitally sign submissions and access the E-Filing system for any proceeding in which it is participating; and (2) advise the Secretary that the participant will be submitting a petition or other adjudicatory document (even in instances in which the participant, or its counsel or representative, already holds an NRC-issued digital ID certificate). Based upon this information, the Secretary will establish an electronic docket for the hearing in this proceeding if the Secretary has not already established an electronic docket.

Information about applying for a digital ID certificate is available on the NRC's public website at *https://www.nrc.gov/site-help/e-submittals/getting-started.html.* Once a participant has obtained a digital ID certificate and a docket has been created, the participant can then submit adjudicatory documents. Submissions must be in Portable Document Format (PDF). Additional guidance on PDF submissions is available on the NRC's public website at *https://www.nrc.gov/site-help/electronic-sub-ref-mat.html.* A filing is considered complete at the time the document is submitted through the NRC's E-Filing system. To be timely, an electronic filing must be submitted to the E-Filing system no later than 11:59 p.m. Eastern Time on the due date. Upon receipt of a transmission, the E-Filing system time-stamps the document and sends the submitter an email notice confirming receipt of the document. The E-Filing system also distributes an email notice that provides access to the document to the NRC's Office of the General Counsel and any others who have advised the Office of the Secretary that they wish to participate in the proceeding, so that the filer need not serve the document on those participants separately. Therefore, applicants and other participants (or their counsel or representative) must apply for and receive a digital ID certificate before adjudicatory documents are filed so that they can obtain access to the documents via the E-Filing system.

A person filing electronically using the NRC's adjudicatory E-Filing system may seek assistance by contacting the NRC's Electronic Filing Help Desk through the ''Contact Us'' link located on the NRC's public website at *https://www.nrc.gov/site-help/e-submittals.html,* by email to *MSHD.Resource@nrc.gov,* or by a toll-free call at 1–866–672–7640. The NRC Electronic Filing Help Desk is available between 9 a.m. and 6 p.m., Eastern Time, Monday through Friday, excluding government holidays.

Participants who believe that they have a good cause for not submitting documents electronically must file an exemption request, in accordance with 10 CFR 2.302(g), with their initial paper filing stating why there is good cause for not filing electronically and requesting authorization to continue to submit documents in paper format. Such filings must be submitted by: (1) First class mail addressed to the Office of the Secretary of the Commission, U.S. Nuclear Regulatory Commission, Washington, DC 20555–0001, Attention: Rulemaking and Adjudications Staff; or (2) courier, express mail, or expedited delivery service to the Office of the Secretary, 11555 Rockville Pike, Rockville, Maryland 20852, Attention: Rulemaking and Adjudications Staff. Participants filing adjudicatory documents in this manner are responsible for serving the document on all other participants. Filing is considered complete by first-class mail as of the time of deposit in the mail, or by courier, express mail, or expedited delivery service upon depositing the document with the provider of the service. A presiding officer, having granted an exemption request from using E-Filing, may require a participant or party to use E-Filing if the presiding officer subsequently determines that the reason for granting the exemption from use of E-Filing no longer exists.

Documents submitted in adjudicatory proceedings will appear in the NRC's electronic hearing docket which is available to the public at *https://adams.nrc.gov/ehd,* unless excluded pursuant to an order of the Commission or the presiding officer. If you do not have an NRC-issued digital ID certificate as described above, click ''cancel'' when the link requests certificates and you will be automatically directed to the NRC's electronic hearing dockets where you will be able to access any publicly available documents in a particular hearing docket. Participants are requested not to include personal privacy information, such as social security numbers, home addresses, or personal phone numbers in their filings, unless an NRC regulation or other law requires submission of such information. For example, in some instances, individuals provide home addresses in order to demonstrate proximity to a facility or site. With respect to copyrighted works, except for limited excerpts that serve the purpose of the adjudicatory filings and would constitute a Fair Use application, participants are requested not to include copyrighted materials in their submission.

The table below provides the plant name, docket number, date of application, ADAMS accession number, and location in the application of the licensee's proposed NSHC determination. For further details with respect to these license amendment applications, see the application for amendment which is available for public inspection in ADAMS and at the NRC's PDR. For additional direction on accessing information related to this document, see the ''Obtaining Information and Submitting Comments'' section of this document.

TABLE 1—LICENSE AMENDMENT REQUEST(S)

Duke Energy Progress, LLC; Shearon Harris Nuclear Power Plant, Unit 1; Brunswick County, NC	
Application Date	October 7, 2019.
ADAMS Accession No	ML19280C844.
Location in Application of NSHC	Page 7–8 of Attachment 1.
Brief Description of Amendments	The amendment would modify technical specification (TS) requirements to permit the use of risk-informed completion times in accordance with the Technical Specifications Task Force (TSTF) Traveler TSTF–505, Revision 2, ''Provide Risk Informed Extended Completion Times—RITSTF [Risk-Informed TSTF] Initiative 4b'' (ADAMS Accession No. ML18183A493).
Proposed Determination	NSHC.

TABLE 1—LICENSE AMENDMENT REQUEST(S)—Continued

Name of Attorney for Licensee, Mailing Address.	David Cummings, Associate General Counsel, Mail Code DEC45, 550 South Tryon Street, Charlotte NC 28202.
Docket Nos	50–400.
NRC Project Manager, Telephone Number.	Tanya Hood, 301–415–1387.
Exelon Generation Company, LLC; Limerick Generating Station, Units 1 and 2; Montgomery County, PA	
Application Date	November 25, 2019.
ADAMS Accession No	ML19329A212.
Location in Application of NSHC	Attachment 1, Page 6 of 7.
Brief Description of Amendments	The proposed changes involve clarification of Technical Specification 4.0.5 requirements to reflect the allowance provided in 10 CFR 50.69(b)(1)(v) to perform alternative treatment of structures, systems, and components that have been categorized as Risk-Informed Safety Class (RISC) of RISC–3 in accordance with the requirements of 10 CFR 50.69 in lieu of performing inspection and testing in accordance with the requirements of 10 CFR 50.55a(f), Inservice Testing, and 10 CFR 50.55a(g), Inservice Inspection.
Proposed Determination	NSHC.
Name of Attorney for Licensee, Mailing Address.	Tamra Domeyer, Associate General Counsel, Exelon Generation Company, LLC, 4300 Winfield Road, Warrenville, IL 60555.
Docket Nos	50–352, 50–353.
NRC Project Manager, Telephone Number.	V. Sreenivas, 301–415–2597.
Southern Nuclear Operating Company, Inc.; Vogtle Electric Generating Plant, Units 3 and 4; Burke County, GA	
Application Date	November 22, 2019.
ADAMS Accession No	ML19326D430.
Location in Application of NSHC	Enclosure 1, Page 18 of 20.
Brief Description of Amendments	The amendment request proposes to depart from Updated Final Safety Analysis Report Tier 2 information (which includes the plant-specific Design Control Document Tier 2 information) and involves related changes to plant-specific Tier 1 information, with corresponding changes to the associated Combined License Appendix C information. Specifically, the amendment request proposes changes to address potential effects within AP1000 Auxiliary Building spaces following loss of heating, ventilation, and air conditioning, or loss of alternating current power events. The licensee also requests an exemption from the provisions of 10 CFR part 52, Appendix D, Section III.B, ''Design Certification Rule for the AP1000 Design, Scope and Contents,'' to allow a departure from the elements of the certification information in Tier 1 of the generic design control document.
Proposed Determination	NSHC.
Name of Attorney for Licensee, Mailing Address.	M. Stanford Blanton, Balch & Bingham LLP, 1710 Sixth Avenue North, Birmingham, AL 35203–2015.
Docket Nos	52–025, 52–026.
NRC Project Manager, Telephone Number.	William Gleaves, 301–415–5848.
Union Electric Company; Callaway Plant, Unit No. 1; Callaway County, MO	
Application Date	November 7, 2019.
ADAMS Accession No	ML19312B657.
Location in Application of NSHC	Attachment 1, page 11, Section 4.2.
Brief Description of Amendments	The proposed amendment would modify the National Fire Protection Association (NFPA) 805 performance-based fire protection program and allow use of closed-cell foam thermal insulation materials in limited applications.
Proposed Determination	NSHC.
Name of Attorney for Licensee, Mailing Address.	Jay E. Silberg, Pillsbury Winthrop Shaw Pittman LLP, 1200 17th St. NW, Washington, DC 20036.
Docket Nos	50–483.
NRC Project Manager, Telephone Number.	Lee Klos, 301–415–5136.

III. Notice of Issuance of Amendments to Facility Operating Licenses and Combined Licenses

During the period since publication of the last biweekly notice, the Commission has issued the following amendments. The Commission has determined for each of these amendments that the application complies with the standards and requirements of the Atomic Energy Act of 1954, as amended (the Act), and the Commission's rules and regulations. The Commission has made appropriate findings as required by the Act and the Commission's rules and regulations in 10 CFR chapter I, which are set forth in the license amendment.

A notice of consideration of issuance of amendment to facility operating license or combined license, as applicable, proposed NSHC determination, and opportunity for a hearing in connection with these actions, was published in the **Federal Register** as indicated.

Unless otherwise indicated, the Commission has determined that these amendments satisfy the criteria for categorical exclusion in accordance with 10 CFR 51.22. Therefore, pursuant to 10 CFR 51.22(b), no environmental impact statement or environmental

assessment need be prepared for these amendments. If the Commission has prepared an environmental assessment under the special circumstances provision in 10 CFR 51.22(b) and has made a determination based on that assessment, it is so indicated.

For further details with respect to the action, see (1) the applications for amendment, (2) the amendment, and (3) the Commission's related letter, Safety Evaluation, and/or Environmental Assessment as indicated. All of these items can be accessed as described in the ''Obtaining Information and Submitting Comments'' section of this document.

Arizona Public Service Company, et al; Palo Verde Nuclear Generating Station, Units 1, 2, and 3; Maricopa County, AZ

Date Issued	12/18/2019.
ADAMS Accession No	ML19309F304.
Amendment Nos	210 (Unit 1); 210 (Unit 2), and 210 (Unit 3).
Brief Description of Amendments	The amendments revised technical specification (TS) requirements in Section 1.3, ''Completion Times,'' and Section 3.0, ''Limiting Condition for Operation (LCO) Applicability'' and Section 3.0, ''Surveillance Requirement (SR) Applicability,'' to clarify and expand the use and application of the Palo Verde Nuclear Generating Station, Units 1, 2, and 3 TS usage rules. These changes are consistent with NRC-approved Technical Specifications Task Force (TSTF) Traveler TSTF–529, Revision 4, ''Clarify Use and Application Rules.''.
Docket Nos	50–528, 50–529, 50–530.

Dominion Energy South Carolina, Inc.; Virgil C. Summer Nuclear Station, Unit 1, Fairfield County, SC

Date Issued	12/11/2019.
ADAMS Accession No	ML19276D377.
Amendment Nos	216.
Brief Description of Amendments	The amendment revised Renewed Facility Operating License No. NPF–12 to reflect a name change from ''South Carolina Electric & Gas Company'' to ''Dominion Energy South Carolina, Inc.'' and other editorial corrections.
Docket Nos	50–395.

DTE Electric Company; Fermi, Unit 2; Monroe County, MI

Date Issued	12/18/2019.
ADAMS Accession No	ML19288A073.
Amendment Nos	215.
Brief Description of Amendments	The amendment modified surveillance requirements for Technical Specification 3.3.5.3, ''Reactor Pressure Vessel (RPV) Water Inventory Control Instrumentation,'' to allow for delayed entry into the associated conditions and required actions when a channel is inoperable due to testing.
Docket Nos	50–341.

Entergy Nuclear Operations, Inc.; Palisades Nuclear Plant; Van Buren County, MI

Date Issued	12/30/2019.
ADAMS Accession No	ML19317D855.
Amendment Nos	271.
Brief Description of Amendments	The amendment revised the Palisades Nuclear Plant Technical Specifications by relocating specific surveillance frequencies to a licensee-controlled program with the implementation of Nuclear Energy Institute (NEI) 04–10, ''Risk-Informed Technical Specifications Initiative 5b, Risk-Informed Method for Control of Surveillance Frequencies.''.
Docket Nos	50–255.

Exelon FitzPatrick, LLC and Exelon Generation Company, LLC; James A FitzPatrick Nuclear Power Plant; LLC; Oswego County, NY

Date Issued	12/19/2019.
ADAMS Accession No	ML19295G783.
Amendment Nos	331.
Brief Description of Amendments	The amendment revised the Technical Specifications to remove the ultimate heat sink bar rack heaters from the ultimate heat sink operability requirements.
Docket Nos	50–333.

Exelon Generation Company, LLC; Braidwood Station, Units 1 and 2, Will County, IL; Byron Station, Unit Nos. 1 and 2, Ogle County, IL, Exelon Generation Company, LLC; Dresden Nuclear Power Station, Units 2 and 3; Grundy County, IL, Exelon FitzPatrick, LLC and Exelon Generation Company, LLC; James A FitzPatrick Nuclear Power Plant; LLC; Oswego County, NY, R. E. Ginna Nuclear Power Plant, LLC and Exelon Generation Company, LLC; R. E. Ginna Nuclear Power Plant; Wayne County, NY, Exelon Generation Company, LLC; LaSalle County Station, Units 1 and 2; LaSalle County, IL, Exelon Generation Company, LLC; Limerick Generating Station, Units 1 and 2; Montgomery County, PA, Nine Mile Point Nuclear Station and Exelon Generation Company, LLC; Nine Mile Point Nuclear Station, Units 1 and 2; Oswego County, NY, Exelon Generation Company, LLC; Peach Bottom Atomic Power Station, Units 2 and 3; York County, PA, Exelon Generation Company, LLC; Quad Cities Nuclear Power Station, Units 1 and 2; Rock Island County, IL

Date Issued	12/18/2019.
ADAMS Accession No	ML19302E700.
Amendment Nos	Braidwood 204/204, Byron 210/210, Dresden 264/257, FitzPatrick 330, Ginna 135, LaSalle 240/226, Limerick 238/201, Nine Mile Point 240/178, Peach Bottom 330/333, and Quad Cities 277/272.
Brief Description of Amendments	The amendments removed the table of contents from the technical specifications for each facility and place them under licensee control.

Docket Nos	STN 50–456, STN 50–457, STN 50–454, STN 50–455, 50–237, 50–249, 50–333, 50–244, 50–373, 50–374, 50–352, 50–353, 50–220, 50–410, 50–277, 50–278, 50–254, and 50–265.
Exelon Generation Company, LLC; R. E. Ginna Nuclear Power Plant; Wayne County, NY	
Date Issued	12/23/2019.
ADAMS Accession No	ML19325D824.
Amendment Nos	136.
Brief Description of Amendments	The amendment revised Technical Specification 5.5.15, ''Containment Leakage Rate Testing Program,'' to adopt Nuclear Energy Institute (NEI) 94–01, Revision 2–A, ''Industry Guideline for Implementing Performance-Based Option of 10 CFR Part 50, Appendix J.'' Specifically, the amendment allows the maximum interval for the Integrated Leakage Rate Test (ILRT), also known as Type A test, to be extended permanently from once in 10 years to once in 15 years, and an administrative change to remove the exception under Technical Specification 5.5.15 for the one-time 15-year Type A test interval being performed prior to May 31, 2011.
Docket Nos	50–244.
Omaha Public Power District; Fort Calhoun Station, Unit No. 1; Washington County, NE	
Date Issued	12/11/2019.
ADAMS Accession No	ML19297D677.
Amendment Nos	299.
Brief Description of Amendments	The amendment revised the Operating License and the Permanently Defueled Technical Specifications for Fort Calhoun Station to reflect the requirements after removal of all remaining spent nuclear fuel from the spent fuel pool and its transfer to dry cask storage within the Fort Calhoun Station Independent Spent Fuel Storage Installation.
Docket Nos	50–285.
Tennessee Valley Authority; Browns Ferry Nuclear Plant, Units 1, 2, and 3; Limestone County, AL	
Date Issued	12/26/2019.
ADAMS Accession No	ML19294A011.
Amendment Nos	311 (Unit 1), 334 (Unit 2); and 294 (Unit 3).
Brief Description of Amendments	The amendments replaced existing technical specification requirements related to ''operations with the potential for draining the reactor vessel (OPDRVs)'' with new requirements on reactor pressure vessel water inventory control to protect Safety Limit 2.1.1.3. Safety Limit 2.1.1.3 requires reactor vessel water level to be greater than the top of active irradiated fuel.
Docket Nos	50–259, 50–260, 50–296.

Dated at Rockville, Maryland, this 6th day of January, 2020.

For the Nuclear Regulatory Commission.

Gregory F. Suber,

Deputy Director, Division of Operating Reactor Licensing, Office of Nuclear Reactor Regulation.

[FR Doc. 2020–00170 Filed 1–13–20; 8:45 am]

BILLING CODE 7590–01–P

NUCLEAR REGULATORY COMMISSION

670th Meeting of the Advisory Committee on Reactor Safeguards (ACRS)

In accordance with the purposes of Sections 29 and 182b of the Atomic Energy Act (42 U.S.C. 2039, 2232b), the Advisory Committee on Reactor Safeguards (ACRS) will hold meetings on February 5–8, 2020, Two White Flint North, 11545 Rockville Pike, ACRS Conference Room T2D10, Rockville, MD 20852.

Wednesday, February 5, 2020, Conference Room T2D10

1:00 p.m.–1:05 p.m.: Opening Remarks by the ACRS Chairman (Open)—The ACRS Chairman will make opening remarks regarding the conduct of the meeting.

1:05 p.m.–4:00 p.m.: Biennial Review of NRC Safety Research Program/ Quality Review of Selected Research Projects (Open)—The Committee will have briefings by and discussion led by panel chairs regarding the NRC Safety Research Program and the quality review of selected research projects.

4:15 p.m.–6:00 p.m.: NuScale Design Certification Application Safety Evaluation (Open/Closed)—The Committee will have briefings by and discussion with representatives of the NRC staff regarding the need for further briefings by the staff to support the Committee's Review. For specific chapters to be discussed please contact Mike Snodderly at 301–415–2241. [NOTE: A portion of this session may be closed in order to discuss and protect information designated as proprietary, pursuant to 5 U.S.C 552b(c)(4)].

Thursday, February 6, 2020, Conference Room T2D10

8:30 a.m.–12:00 p.m.: NuScale Design Certification Application Safety Evaluation (Open/Closed)—The Committee will discuss the status of reviews of selected chapters of the NuScale design certification application including relevant technical and regulatory issues. The Committee will also discuss the need for further briefings by the staff to support the Committee's review. For specific chapters to be discussed please contact Mike Snodderly at 301–415–2241. [NOTE: A portion of this session may be closed in order to discuss and protect information designated as proprietary, pursuant to 5 U.S.C 552b(c)(4)].

1:30 p.m.–3:30 p.m.: Meeting with the Institute of Nuclear Power Operations (INPO) (Closed)—The Committee will have briefings by and discussions with representatives of the NRC staff and INPO regarding topics of mutual interest. [NOTE: This session will be closed in order to discuss and protect information designated as proprietary, pursuant to 5 U.S.C 552b(c)(4)].

3:45 p.m.–6:00 p.m.: NuScale Design Certification Application Safety Evaluation (Open/Closed) (continuation)—The Committee will discuss the status of reviews of selected chapters of the NuScale design certification application including relevant technical and regulatory issues. The Committee will also discuss the need for further briefings by the staff to

support the Committee's review. For specific chapters to be discussed please contact Mike Snodderly at 301–415–2241. [NOTE: A portion of this session may be closed in order to discuss and protect information designated as proprietary, pursuant to 5 U.S.C 552b(c)(4)].

Friday, February 7, 2020, Conference Room T2D10

8:30 a.m.–10:30 a.m.: Future ACRS Activities/Report of the Planning and Procedures Subcommittee and Reconciliation of ACRS Comments and Recommendations (Open/Closed)—The Committee will hear discussion of the recommendations of the Planning and Procedures Subcommittee regarding items proposed for consideration by the Full Committee during future ACRS meetings. [NOTE: A portion of this meeting may be closed pursuant to 5 U.S.C. 552b(c)(2) and (6) to discuss organizational and personnel matters that relate solely to internal personnel rules and practices of the ACRS, and information the release of which would constitute a clearly unwarranted invasion of personal privacy.] [NOTE: A portion of this session may be closed in order to discuss and protect information designated as proprietary, pursuant to 5 U.S.C 552b(c)(4)].

10:45 a.m.–12:00 p.m.: Preparation of ACRS Reports/NuScale Chapters Discussion (Open/Closed)—The Committee will continue its discussion of proposed ACRS reports and NuScale chapters. [NOTE: A portion of this session may be closed in order to discuss and protect information designated as proprietary, pursuant to 5 U.S.C 552b(c)(4)].

2:00 p.m.–6:00 p.m.: Preparation of ACRS Reports (Open/Closed)—The Committee will continue its discussion of proposed ACRS reports. [NOTE: A portion of this session may be closed in order to discuss and protect information designated as proprietary, pursuant to 5 U.S.C 552b(c)(4)].

Saturday, February 8, 2020, Conference Room T2D10

8:30 a.m.–12:00 p.m.: Preparation of ACRS Reports (Open/Closed)—The Committee will continue its discussion of proposed ACRS reports. [NOTE: A portion of this session may be closed in order to discuss and protect information designated as proprietary, pursuant to 5 U.S.C 552b(c)(4)].

Procedures for the conduct of and participation in ACRS meetings were published in the **Federal Register** on June 13, 2019 (84 FR 27662). In accordance with those procedures, oral or written views may be presented by members of the public, including representatives of the nuclear industry. Persons desiring to make oral statements should notify Quynh Nguyen, Cognizant ACRS Staff and the Designated Federal Official (Telephone: 301–415–5844, Email: *Quynh.Nguyen@nrc.gov*), 5 days before the meeting, if possible, so that appropriate arrangements can be made to allow necessary time during the meeting for such statements. In view of the possibility that the schedule for ACRS meetings may be adjusted by the Chairman as necessary to facilitate the conduct of the meeting, persons planning to attend should check with the Cognizant ACRS staff if such rescheduling would result in major inconvenience. The bridgeline number for the meeting is 866–822–3032, passcode 8272423#.

Thirty-five hard copies of each presentation or handout should be provided 30 minutes before the meeting. In addition, one electronic copy of each presentation should be emailed to the Cognizant ACRS Staff one day before meeting. If an electronic copy cannot be provided within this timeframe, presenters should provide the Cognizant ACRS Staff with a CD containing each presentation at least 30 minutes before the meeting.

In accordance with Subsection 10(d) of Public Law 92–463 and 5 U.S.C. 552b(c), certain portions of this meeting may be closed, as specifically noted above. Use of still, motion picture, and television cameras during the meeting may be limited to selected portions of the meeting as determined by the Chairman. Electronic recordings will be permitted only during the open portions of the meeting.

ACRS meeting agendas, meeting transcripts, and letter reports are available through the NRC Public Document Room (PDR) at *pdr.resource@nrc.gov,* or by calling the PDR at 1–800–397–4209, or from the Publicly Available Records System component of NRC's Agencywide Documents Access and Management System (ADAMS) which is accessible from the NRC website at *https://www.nrc.gov/reading-rm/adams.html* or *https://www.nrc.gov/reading-rm/doc-collections/#ACRS/.*

Video teleconferencing service is available for observing open sessions of ACRS meetings. Those wishing to use this service should contact Ms. Paula Dorm, ACRS Audio Visual Technician (301–415–7799), between 7:30 a.m. and 3:45 p.m. (Eastern Time), at least 10 days before the meeting to ensure the availability of this service. Individuals or organizations requesting this service will be responsible for telephone line charges and for providing the equipment and facilities that they use to establish the video teleconferencing link. The availability of video teleconferencing services is not guaranteed.

Dated: January 9, 2020.

Russell E. Chazell,

Federal Advisory Committee Management Officer, Office of the Secretary.

[FR Doc. 2020–00378 Filed 1–13–20; 8:45 am]

BILLING CODE 7590–01–P

SECURITIES AND EXCHANGE COMMISSION

[Release No. 34–87906; File No. 4–757]

Notice of Proposed Order Directing the Exchanges and the Financial Industry Regulatory Authority To Submit a New National Market System Plan Regarding Consolidated Equity Market Data

January 8, 2020.

I. Introduction

As discussed in more detail in the attached proposed order (''Proposed Order''),[1] certain market developments have given rise to concerns about whether—as currently structured—the existing national market system plans (the ''Equity Data Plans'')[2] that govern the public dissemination of real-time, consolidated equity market data for national market system stocks continue

[1] *See* Attachment A.

[2] The three Equity Data Plans that currently govern the collection, consolidation, processing, and dissemination of SIP data are (1) the Consolidated Tape Association Plan (''CTA Plan''), (2) the Consolidated Quotation Plan (''CQ Plan''), and (3) the Joint Self-Regulatory Organization Plan Governing the Collection, Consolidation, and Dissemination of Quotation and Transaction Information for Nasdaq-Listed Securities Traded on Exchanges on an Unlisted Trading Privileges Basis (''UTP Plan''). Each of the Equity Data Plans is an NMS plan under Rule 608 of Regulation NMS. 17 CFR 242.608; *see also* Securities Exchange Act Release Nos. 10787 (May 10, 1974), 39 FR 17799 (order approving CTA Plan); 15009 (July 28, 1978), 43 FR 34851 (Aug. 7, 1978) (order temporarily approving CQ Plan); 16518 (Jan. 22, 1980), 45 FR 6521 (Jan. 28, 1980) (order permanently approving CQ Plan); and 28146 (June 26, 1990), 55 FR 27917 (July 6, 1990) (order approving UTP Plan). The Commission notes that the options exchanges are participants in the Limited Liability Company Agreement of Options Price Reporting Authority, LLC (''OPRA Plan''), an NMS plan under Rule 608 of Regulation NMS, which governs the collection, consolidation, processing, and dissemination of last sale and quotation information for listed options. *See* Securities Exchange Act Release Nos. 17638 (Mar. 18, 1981), 22 SEC. Docket 484 (Mar. 31, 1981); 61367 (Jan. 15, 2010), 75 FR 3765 (Jan. 22, 2010). The Commission is proposing to take an incremental approach to addressing governance issues related to NMS plans and is at this time proposing to address only the governance of the Equity Data Plans. The Commission may in the future consider the governance of the OPRA Plan.

to fulfill their statutory purpose under Section 11A of the Securities Exchange Act of 1934 (''Act'').[3] To begin the process of addressing these concerns, and pursuant to Section 11A(a)(3)(B) of the Act,[4] the Commission is publishing for comment the attached Proposed Order, which if ultimately issued by the Commission, would require the participants in the Equity Data Plans [5] to propose a single, new equity data plan (''New Consolidated Data Plan'').

Based upon input received from a broad range of market participants (including the SROs), the Commission's Equity Market Structure Advisory Committee, and its own regulatory oversight of the Equity Data Plans, the Commission has set forth in the Proposed Order its concerns regarding the Equity Data Plan's provision of equity market data,[6] its views regarding issues arising from the current governance structure of the Equity Data Plans,[7] and the specific governance provisions that the Commission preliminarily believes would enable the New Consolidated Data Plan to address these concerns and issues.[8] The Commission seeks public comment on each of these aspects of the Proposed Order.

To the extent that the Participants have additional insights into the concerns and issues discussed in the Proposed Order, or are able to identify and suggest additional or alternative measures to those that the Commission has preliminarily set forth in the Proposed Order, the Commission will consider such information and suggestions, as well as any other comment on the Proposed Order. The Commission requests that any alternatives include a comprehensive explanation as to why the alternative would be effective in addressing the significant issues discussed in the Proposed Order regarding the current governance and operation of the Equity Data Plans.

After considering any comments received on the Proposed Order, the Commission will consider what action to take, including whether to issue a final order requiring the Participants to file a New Consolidated Data Plan. If the Commission issues such a final order, the New Consolidated Data Plan then submitted by the Participants would be published for public comment, and, after considering any comments received on the New Consolidated Data Plan filed by the Participants, the Commission would consider whether to approve the New Consolidated Data Plan, with any changes or subject to such conditions as the Commission may deem necessary or appropriate.[9] Unless or until a New Consolidated Data Plan has been approved by the Commission, the Equity Data Plans will continue to govern the collection, processing, and dissemination of equity market data.

The Participants have submitted proposed amendments to the existing Equity Data Plans to (a) make mandatory their current disclosure policies with respect to conflicts of interest,[10] and (b) establish a policy regarding the confidential treatment of any data or information generated, accessed, transmitted to, or discussed by the operating committee.[11] Contemporaneously with the publication of this Notice of Proposed Order, the Commission is publishing for notice and comment these proposed amendments to the Equity Data Plans.[12]

* * * * *

Interested persons are invited to submit written presentations of views, data, and arguments concerning the Proposed Order, including the Proposed Order's discussion of concerns with the current provision of equity market data by the Equity Data Plans, the Proposed Order's discussion of issues with the current governance structure of the Equity Data Plans, the specific provisions set forth in the Proposed Order to address those concerns and issues, and the likely economic consequences, including those of any proposed alternative provisions.

II. Procedure for Written Comments

All comments should be submitted by February 28, 2020. Comments may be submitted by any of the following methods:

Electronic Comments

- Use the Commission's internet comment form (*https://www.sec.gov/rules/sro.shtml*); or
- Send an email to: *rule-comments@sec.gov.* Please include File Number 4–757 on the subject line.

Paper Comments

- *Send paper comments to:* Secretary, Securities and Exchange Commission, 100 F Street NE, Washington, DC 20549–1090.

All submissions should refer to File Number 4–757. This file number should be included on the subject line if email is used. To help the Commission process and review your comments more efficiently, please use only one method. The Commission will post all comments on the Commission's internet website (*https://www.sec.gov/rules/sro.shtml*). Copies of the all written statements with respect to the Proposed Order that are filed with the Commission, and all written communications relating to the Proposed Order between the Commission and any person, other than those that may be withheld from the public in accordance with the provisions of 5 U.S.C. 552, will be available for website viewing and printing in the Commission's Public Reference Room, 100 F Street NE, Washington, DC 20549 on official business days between the hours of 10:00 a.m. and 3:00 p.m. All comments received will be posted without change. Persons submitting comments are cautioned that we do not redact or edit personal identifying information from comment submissions. You should submit only information that you wish to make available publicly. All submissions should refer to File Number 4–757 and should be submitted on or before February 28, 2020.

[3] 15 U.S.C. 78k–1.

[4] 15 U.S.C. 78k–1(a)(3)(B).

[5] Cboe BYX Exchange, Inc. (''BYX''), Cboe BZX Exchange, Inc. (''BZX''), Cboe EDGA Exchange, Inc. (''EDGA''), Cboe EDGX Exchange, Inc. (''EDGX''), Cboe Exchange, Inc. (''Cboe''), Investors Exchange LLC (''IEX''), Long Term Stock Exchange, Inc. (''LTSE''), Nasdaq BX, Inc. (''BX''), Nasdaq ISE, LLC (''ISE''), Nasdaq PHLX LLC (''PHLX''), Nasdaq Stock Market LLC (''Nasdaq''), New York Stock Exchange LLC (''NYSE''), NYSE American LLC (''NYSE American''), NYSE Arca, Inc. (''NYSE Arca''), NYSE Chicago, Inc. (''NYSE Chicago''), NYSE National, Inc. (''NYSE National''), and Financial Industry Regulatory Authority, Inc. (''FINRA'') (each a ''Participant'' or a ''Self-Regulatory Organization'' (''SRO'') and, collectively, the ''Participants'' or ''the SROs'').

[6] *See* Attachment A, Section II.A.

[7] *See* Attachment A, Section II.B.

[8] *See* Attachment A, Sections II.C & II.D.

[9] *See* Rule 608 of Regulation NMS, 17 CFR 242.608.

[10] *See* Thirtieth Substantive Amendment to the Second Restatement of the CTA Plan and Twenty-Second Substantive Amendment to the Restated CQ Plan, dated July 3, 2019, submitted to Vanessa Countryman, Secretary, Commission; Forty-Fourth Amendment to the UTP Plan, dated July 3, 2019, submitted to Vanessa Countryman, Secretary, Commission.

[11] *See* Thirty-Third Substantive Amendment to the Second Restatement of the CTA Plan and Twenty-Fourth Substantive Amendment to the Restated CQ Plan, dated November 19, 2019, submitted to Vanessa Countryman, Secretary, Commission; Forty-Seventh Amendment to the UTP Plan, dated November 19, 2019, submitted to Vanessa Countryman, Secretary, Commission.

[12] *See* Securities Exchange Act Release Nos. 87907 (Jan. 8, 2020) (Notice of Filing of the Thirty-Third Substantive Amendment to the Second Restatement of the CTA Plan and Twenty-Fourth Substantive Amendment to the Restated CQ Plan); 87908 (Jan. 8, 2020) (Notice of Filing of the Forty-Fourth Amendment to the UTP Plan); 87909 (Jan. 8, 2020) (Notice of Filing of the Thirty-Third Substantive Amendment to the Second Restatement of the CTA Plan and Twenty-Fourth Substantive Amendment to the Restated CQ Plan); and 87910 (Jan. 8, 2020) (Notice of Filing of the Forty-Seventh Amendment to the UTP Plan).

By the Commission.

Vanessa A. Countryman,

Secretary.

Attachment A

Securities and Exchange Commission

(Release No. 34–)

[Date]

Order Directing the Exchanges and the Financial Industry Regulatory Authority To Submit a New National Market System Plan Regarding Consolidated Equity Market Data

Notice is hereby given that, pursuant to Section 11A(a)(3)(B) of the Securities Exchange Act of 1934 (''Act''),[1] the Securities and Exchange Commission (''Commission'') orders the Cboe BYX Exchange, Inc. (''BYX''), Cboe BZX Exchange, Inc. (''BZX''), Cboe EDGA Exchange, Inc. (''EDGA''), Cboe EDGX Exchange, Inc. (''EDGX''), Cboe Exchange, Inc. (''Cboe''), Investors Exchange LLC (''IEX''), Long Term Stock Exchange, Inc. (''LTSE''), Nasdaq BX, Inc. (''BX''), Nasdaq ISE, LLC (''ISE''), Nasdaq PHLX LLC (''PHLX''), Nasdaq Stock Market LLC (''Nasdaq''), New York Stock Exchange LLC (''NYSE''), NYSE American LLC (''NYSE American''), NYSE Arca, Inc. (''NYSE Arca''), NYSE Chicago, Inc. (''NYSE Chicago''), NYSE National, Inc. (''NYSE National''), and Financial Industry Regulatory Authority, Inc. (''FINRA'') (each a ''Participant'' or a ''Self-Regulatory Organization'' (''SRO'') and, collectively, the ''Participants'' or ''the SROs'') to act jointly in developing and filing with the Commission a proposed new single national market system plan (the ''New Consolidated Data Plan''), which will replace the existing national market system plans (the ''Equity Data Plans'')[2] that govern the public dissemination of real-time, consolidated equity market data for national market system stocks (''NMS stocks'').[3] The New Consolidated Data Plan shall be filed with the Commission pursuant to Rule 608 of Regulation NMS[4] no later than [90 days after the order is issued].

The public dissemination of consolidated information about quotes and trades in equity securities is a fundamental component of the national market system. In creating the national market system, Congress specifically found that ensuring the availability of this information is in the public interest and appropriate for the protection of investors and the maintenance of fair and orderly markets.[5] As the Commission has stated, ''one of the Commission's most important responsibilities is to preserve the integrity and affordability of the consolidated data stream.''[6]

In the Commission's view, changes in the market[7] have heightened an inherent conflict of interest between the Participants' collective responsibilities in overseeing the Equity Data Plans and their individual interests in maximizing the viability of proprietary data products that they sell to market participants. Under the current governance structure of the Equity Data Plans, the Participants have exclusive control of the Equity Data Plans. It is the Commission's belief that the Participants' conflicts of interest, combined with the concentration within exchange groups of voting power in the Equity Data Plans, create significant concerns regarding whether the consolidated feeds meet the purposes for them set out by Congress and by the Commission in adopting the national market system.[8] Addressing these and other issues with the current governance structure of the Equity Data Plans is a key step in responding to the broader concerns about the consolidated data feeds.[9]

The Commission further believes that the consolidated data feeds can be improved by consolidating the three existing, separate Equity Data Plans into a single New Consolidated Data Plan. A New Consolidated Data Plan should reduce existing redundancies, inefficiencies, and inconsistencies between and among the Equity Data Plans and should simplify plan governance and maintenance. The Commission is therefore ordering the SROs to develop the New Consolidated Data Plan to address the governance issues described in this Order and to consolidate the Equity Data Plans into the single New Consolidated Data Plan. Based upon input received from a broad range of market participants (including the SROs), the Commission's Equity Market Structure Advisory Committee (''EMSAC''), and its own regulatory oversight of the Equity Data Plans, the Commission has set forth below specific governance provisions that the Commission believes would enable the New Consolidated Data Plan to address these issues.

I. Background

In 1975, Congress, through the enactment of Section 11A of the Act,[10] directed the Commission to facilitate the establishment of a national market system for the trading of securities in accordance with the Congressional findings and objectives set forth in Section 11A(a)(1) of the Act.[11] Among the findings and objectives of Section 11A(a)(1) are that new data processing and communications techniques create the opportunity for more efficient and effective market operations,[12] and that it is in the public interest and appropriate for the protection of investors and the maintenance of fair and orderly markets to ensure the availability of information with respect to quotations for and transactions in securities.[13]

Congress authorized the Commission to prescribe rules to ensure the ''prompt, accurate, reliable, and fair collection, processing, distribution, and publication of information with respect to quotations for and transactions in such securities and the fairness and usefulness of the form and content of such information.''[14] In furtherance of these purposes, the Commission has sought through its rules and regulations to help ensure that certain ''core data''[15] is widely available for reasonable fees.[16] The Commission has recognized that investors must have this core data ''to participate in the U.S. equity markets.''[17]

Section 11A of the Act also authorizes the Commission, by rule or order, to authorize or require the SROs to act jointly with respect to matters as to which they share authority under the Act in planning, developing, operating, or regulating a facility of the national market system.[18] Pursuant to this authority, the Commission adopted

[1] 15 U.S.C. 78k–1(a)(3)(B).

[2] *See infra* note 31 and accompanying text.

[3] Generally, NMS stocks include any security, other than an option, for which transaction reports are collected, processed, and made available pursuant to an effective transaction reporting plan. *See* 17 CFR 242.600(b)(47).

[4] 17 CFR 242.608.

[5] 15 U.S.C. 78k–1(a)(1)(C).

[6] Regulation NMS, Securities Exchange Act Release No. 51808 (June 9, 2005), 70 FR 37496, 37560 (June 29, 2005) (''Regulation NMS Release'').

[7] *See infra* Section II.A. and Section II.B.

[8] 15 U.S.C. 78k–1(a)(1)–(2).

[9] *See infra* Section II.A.

[10] 15 U.S.C. 78k–1.

[11] 15 U.S.C. 78k–1(a)(1).

[12] *See* 15 U.S.C. 78k–1(a)(1)(B). *See also* H.R. Rep. No. 94–229, 94th Cong., 1st Sess. 93 (1975) (House Report noting that the systems for collecting and distributing consolidated market data would ''form the heart of the national market system.'').

[13] *See* 15 U.S.C. 78k–1(a)(1)(C).

[14] 15 U.S.C. 78k–1(c)(1)(B).

[15] *See infra* note 27 and accompanying text (defining ''core data'').

[16] *See* 17 CFR 242.603; *see also e.g.,* Regulation NMS Release, *supra* note 6, 70 FR at 37560 (stating that ''[i]n the Proposing Release, the Commission emphasized that one of its primary goals with respect to market data is to assure reasonable fees that promote the wide public availability of consolidated market data.'').

[17] *Id.* at 37560.

[18] *See* 15 U.S.C. 78k–1(a)(3)(B).

Regulation NMS.[19] Rule 608 of Regulation NMS authorizes two or more SROs, acting jointly, to file with the Commission a national market system plan (''NMS plan'') or a proposed amendment to an effective NMS plan.[20] And Rule 603 of Regulation NMS requires the SROs to act jointly pursuant to NMS plans to ''disseminate consolidated information, including a national best bid and national best offer, on quotations for and transactions in NMS stocks.'' [21] The purpose of the Equity Data Plans, adopted pursuant to Regulation NMS, is to facilitate the collection and dissemination of core data so that the public has ready access to a ''comprehensive, accurate, and reliable source of information for the prices and volume of any NMS stock at any time during the trading day.'' [22] Widespread availability of timely market data promotes fair and efficient markets and facilitates the ability of brokers and dealers to provide best execution to their customers.[23]

Under Regulation NMS and the Equity Data Plans, the SROs are required to provide certain quotation [24] and transaction data [25] for each NMS stock to an exclusive securities information processor (''SIP''),[26] which consolidates this market data and makes it available to market participants on the consolidated tapes, as described below. For each NMS stock, the Equity Data Plans provide for the dissemination of top-of-book (''TOB'') data, generally defining consolidated market information (or ''core data'') as consisting of: (1) The price, size, and exchange of the last sale; (2) each exchange's current highest bid and lowest offer, and the shares available at those prices; and (3) the national best bid and offer (''NBBO'') (*i.e.,* the highest bid and lowest offer currently available on any exchange).[27] In addition to disseminating core data, the SIPs collect, calculate, and disseminate certain regulatory data—including information required by the National Market System Plan to Address Extraordinary Market Volatility (''LULD Plan''),[28] information relating to regulatory halts and market-wide circuit breakers, and information regarding the short-sale price test pursuant to Rule 201 of Regulation SHO.[29] They also collect and disseminate other NMS stock data and disseminate certain administrative messages. Together with core data, the Commission refers to this broader set of data for purposes of this Order as ''SIP data.'' [30]

The three Equity Data Plans that currently govern the collection, consolidation, processing, and dissemination of SIP data are (1) the Consolidated Tape Association Plan (''CTA Plan''), (2) the Consolidated Quotation Plan (''CQ Plan''), and (3) the Joint Self-Regulatory Organization Plan Governing the Collection, Consolidation, and Dissemination of Quotation and Transaction Information for Nasdaq-Listed Securities Traded on Exchanges on an Unlisted Trading Privileges Basis (''UTP Plan'').[31] Pursuant to the Equity Data Plans, three separate networks disseminate consolidated data for equity securities: (1) Tape A for securities listed on the NYSE; (2) Tape B for securities listed on exchanges other than NYSE and Nasdaq; and (3) Tape C for securities listed on Nasdaq. The CTA Plan governs the collection, consolidation, processing, and dissemination of last sale information for Tape A and Tape B securities. The CQ Plan governs the collection, consolidation, processing, and dissemination of quotation information for Tape A and Tape B securities. And the UTP Plan governs the collection, consolidation, processing, and dissemination of last sale and quotation information for Tape C securities.

As discussed further below, the structure of the equity markets and the corporate structure of exchanges have changed dramatically since the adoption of Regulation NMS in 2005.[32] While a substantial amount of trading in 2005 was conducted on relatively slow manual markets,[33] and was concentrated for any given stock on its listing exchanges,[34] nearly all trading now occurs on fast electronic markets (where even small degrees of latency affect trading strategies) and is dispersed among a wide range of competing market centers.[35] Furthermore, most exchanges have converted from entities mutually owned by their members to demutualized entities that are owned by shareholders

[19] 17 CFR 242.600–612; *see also* Regulation NMS Release, *supra* note 6, 70 FR at 37560.

[20] *See* 17 CFR 242.608.

[21] 17 CFR 242.603(b).

[22] Concept Release on Equity Market Structure, Securities Exchange Act Release No. 61358 (Jan. 14. 2010), 75 FR 3593, 3600 (Jan. 21, 2010) (''Equity Market Structure Concept Release'').

[23] *See* In the Matter of the Application of Bloomberg L.P., Securities Exchange Act Release No. 83755 at 3 (July 31, 2018), *available at https://www.sec.gov/litigation/opinions/2018/34-83755.pdf* (''Bloomberg Order''); SEC Concept Release: Regulation of Market Information Fees and Revenues, Securities Exchange Act Release No. 44208 (Dec. 9, 1999), 64 FR 70613, 70615 (Dec. 17, 1999) (stating that the distribution of core data ''is the principal tool for enhancing the transparency of the buying and selling interest in a security, for addressing the fragmentation of buying and selling interest among different market centers, and for facilitating the best execution of customers' orders by their broker-dealers'').

[24] *See* 17 CFR 242.602.

[25] *See* 17 CFR 242.601.

[26] *See* 15 U.S.C. 78c(22)(A) (defining securities information processor). Rule 603(b) of Regulation NMS requires that every national securities exchange on which an NMS stock is traded and national securities association act jointly pursuant to one or more effective NMS plans to disseminate consolidated information on quotations for and transactions in NMS stocks, and that such plan or plans provide for the dissemination of all consolidated information for an individual NMS stock through a single SIP. *See* 17 CFR 242.603(b).

[27] *See* Bloomberg Order, *supra* note 23, at 3; *see also* Securities Exchange Act Release No. 87193 (Oct. 1, 2019), 84 FR 54794, 54795 (Oct. 11, 2019) (''Effective-Upon-Filing Release'').

[28] The LULD Plan is available at *http://www.luldplan.com.*

[29] 17 CFR 242.201(b)(3).

[30] Broker-dealers rely on SIP data disseminated by the Equity Data Plans to comply with a number of regulatory requirements. *See infra* notes 64–67 and accompanying text.

[31] Each of the Equity Data Plans is an NMS plan under Rule 608 of Regulation NMS. 17 CFR 242.608; *see also* Securities Exchange Act Release Nos. 10787 (May 10, 1974), 39 FR 17799 (order approving CTA Plan); 15009 (July 28, 1978), 43 FR 34851 (Aug. 7, 1978) (order temporarily approving CQ Plan); 16518 (Jan. 22, 1980), 45 FR 6521 (Jan. 28, 1980) (order permanently approving CQ Plan); and 28146 (June 26, 1990), 55 FR 27917 (July 6, 1990) (order approving UTP Plan).

[32] *See infra* Sections II.A, II.B.1, and II.B.2.

[33] *See* Equity Market Structure Concept Release, *supra* note 22, 75 FR at 3594 (''NYSE-listed stocks were traded primarily on the floor of the NYSE in a manual fashion until October 2006. At that time, NYSE began to offer fully automated access to its displayed quotations.''). In contrast to NYSE, stocks listed on Nasdaq traded in a highly automated fashion at many different trading centers following the introduction of SuperMontage in 2002. *See* Securities Exchange Act Release No. 46429 (Aug. 29, 2002), 67 FR 56862 (Sept. 5, 2002). *See also* Steven Quirk, Senior Vice President, Trader Group, TD Ameritrade, Testimony before the U.S. Senate Committee on Homeland Security and Governmental Affairs, Permanent Subcommittee on Investigations, Hearing on ''Conflicts of Interest, Investor Loss of Confidence, and High Speed Trading in U.S. Stock Markets'' (June 17, 2014), *available at https://www.hsgac.senate.gov/imo/media/doc/STMT%20-%20Quirk%20-%20TD%20Ameritrade%20(June%2017%202014).pdf%20* (citing statistics that average execution speed has improved by 90% since 2004—from 7 seconds to 0.7 seconds in 2014). Today, trading speed is measured in microseconds and is moving towards nanoseconds. *See, e.g.,* Wall Street Journal, Trading Tech Accelerates Toward Speed of Light (Aug. 8, 2016), *available at https://www.wsj.com/articles/trading-tech-accelerates-toward-speed-of-light-1470559173;* Wall Street Journal, NYSE Aims to Speed Up Trading With Core Tech Upgrade (Aug. 5, 2019), *available at https://www.wsj.com/articles/nyse-aims-to-speed-up-trading-with-core-tech-upgrade-11565002800.*

[34] *See* Securities Exchange Act Release No. 59039 (Dec. 2, 2008), 73 FR 74770, 74782 (Dec. 9, 2008) (File No. SR–NYSEArca–2006–21) (NYSE's reported market share of trading in NYSE-listed stocks declined from 79.1% in January 2005 to 30.6% in June 2008.).

[35] *See* Equity Market Structure Concept Release, *supra* note 22, 75 FR at 3598 (''The registered exchanges all have adopted highly automated trading systems that can offer extremely high-speed, or 'low-latency,' order responses and executions.'').

and that also offer proprietary market data products.[36] Finally, ''exchange groups'' (multiple exchanges operating under one corporate umbrella) have emerged, consolidating much of the voting power and control of the Equity Data Plans.[37]

In the Commission's view, these market developments have heightened conflicts of interest between the exchanges' commercial interests and their regulatory obligations under the Act and the Equity Data Plans to produce and provide core data. The Commission believes that the current governance structure of the Equity Data Plans is inadequate to respond to these changes or to the evolving needs of investors and other market participants. The SIPs have significant market power in the market for core and aggregated market data products and are monopolistic providers of certain market information.[38] But the operation of the Equity Data Plans has not kept pace with the efforts of the exchanges to expand the content of—and to employ technology to reduce the latency and increase the throughput of—certain proprietary data products. For example, the exchanges have developed depth-of-book (''DOB'') products that provide greater content (*e.g.,* information about orders resting on the order book and order imbalance information for opening and closing auctions) at lower latencies, relative to the SIPs, for one segment of the data market.[39] The exchanges have also developed proprietary TOB products that provide data that is generally limited to the highest bid and lowest ask and last sale price information at a lower price for another segment of the data market that is less sensitive to latency.[40] By contrast, the Participants of the Equity Data Plans have not taken comparable measures to update the SIPs to reflect new innovations in market data in response to evolving markets and the changing needs of investors (*e.g.,* those that use low-latency DOB products versus those that use TOB products).[41]

The Commission believes that, under the current governance structure of the Equity Data Plans, improvements to the SIPs to adequately address important product, performance and pricing differentials between the SIPs and proprietary data products have not occurred.[42] Also, the Commission does not believe that having multiple Equity Data Plans, which need to be separately maintained and operated, is necessary or efficient. The Commission believes the Equity Data Plans should be consolidated into a New Consolidated Data Plan. In the Commission's view, this would streamline operation of the SIP feeds, leading to greater efficiency in meeting the purposes of Section 11A of the Act, including ensuring the prompt, accurate, reliable, and fair collection, processing, distribution, and publication of quotation and transaction information, as well as the fairness and usefulness of the form and content of such data.[43] As discussed in more detail below, the Commission believes that the Participants should develop a New Consolidated Data Plan that: (i) Operates pursuant to a governance structure that takes into account the evolving nature of business and trading relationships among exchanges, their members, and investors; (ii) is designed to ensure the usefulness of core data to market participants and to ensure that core data is provided on terms that are fair and reasonable, consistent with Section 11A of the Act and the rules thereunder;[44] and (iii) replaces the three Equity Data Plans to eliminate redundancies, inefficiencies, and duplicative costs. As noted above, the Commission believes that consolidating the Equity Data Plans into a single New Consolidated Data Plan should result in a more efficient governance structure for operation of the SIPs.[45]

II. Discussion

In recent years, the Commission has received, and in certain instances, solicited a substantial amount of comment on the current provision of SIP data by the Equity Data Plans and on the governance model of the Equity Data Plans. In 2015, the EMSAC was established and tasked with providing the Commission with diverse perspectives on the structure and operations of the U.S. equities markets, as well as advice and recommendations on matters related to equity market structure.[46] In 2018, the Commission's

[36] *See infra* Section II.B.1.

[37] *See infra* Section II.B.2.

[38] *See, e.g.,* Bloomberg Order, *supra* note 23, at 4. Although some proprietary market data products are comparable to core data and could be used by some core data subscribers as substitutes for core data in certain situations, these products are not exact substitutes and are not viable substitutes across all use cases. For example, some third-party data aggregators buy direct depth-of-book feeds from the exchanges and aggregate them to produce products similar to core data; these products, however, do not provide market information that is critical to some subscribers and available only through the SIPs. *See* Transcript of Day One, Roundtable, at 126:20–129:8 (Oct. 25, 2018) (''Day One Transcript'') (statement of Mark Skalabrin, Redline Trading Solutions), *available at https://www.sec.gov/spotlight/equity-market-structure-roundtables/roundtable-market-data-market-access-102518-transcript.pdf.* Additionally, some exchanges offer TOB data feeds, which may be considered by some to be viable substitutes for core data for certain applications, however, broker-dealers typically obtain core data provided by the SIP to fulfill their obligations under Rule 603 of Regulation NMS, which requires a broker-dealer to show a consolidated display of market data in a context in which a trading or order routing decision can be implemented. 17 CFR 242.603; *see also infra* note 67 and accompanying text.

[39] *See, e.g.,* Nasdaq Global Data Products, *available at http://www.nasdaqtrader.com/Trader.aspx?id=DPSpecs* (last accessed Nov. 16, 2019) (describing low-latency DOB data products); Real-Time—NYSE Proprietary Market Data, *available at https://www.nyse.com/market-data/real-time* (last accessed Nov. 16, 2019) (describing low-latency DOB data products); Cboe Equities Exchanges Market Data Product Offerings, *available at https://markets.cboe.com/us/equities/market_data_services/* (last accessed Nov. 16, 2019) (describing low-latency DOB data products). Particularly when aggregated, proprietary DOB market data products provide a consolidated view of the market with greater content and lower latency. *See infra* Section II.A.

[40] Examples of such proprietary TOB products include NYSE BBO (*https://www.nyse.com/market-data/real-time/bbo*), NASDAQ Basic (*https://business.nasdaq.com/intel/GIS/nasdaq-basic.html*), and CBOE One Feed (*https://markets.cboe.com/us/equities/market_data_services/cboe_one*). NYSE BBO provides TOB data. Nasdaq Basic and Cboe One's Summary Feed provide TOB and last sale information. Nasdaq Basic also provides Nasdaq Opening and Closing Prices and other information, including Emergency Market Condition event messages, System Status, and trading halt information. Cboe One, however, also offers a Premium Feed that includes DOB data. Each of these products is sold separately by the relevant exchange group. *See* Letter from Matthew J. Billings, Managing Director, Market Data Strategy, TD Ameritrade (Oct. 24, 2018), at 5–9, *available at https://www.sec.gov/comments/4-729/4729-4560068-176205.pdf* (''TD Ameritrade Letter'') (stating that the lower cost of exchange TOB products, coupled with costs associated with the process to differentiate between retail professionals and non-professionals imposed by the SIP Plans, and associated audit risk, favors retail broker-dealer use of exchange TOB products).

[41] *See infra* notes 57–62 and accompanying text.

[42] *See infra* notes 84–86, 112 and accompanying text.

[43] *See* 15 U.S.C. 78k–1(c)(1)(B).

[44] 15 U.S.C. 78k–1; Rules 601–603 of Regulation NMS, 17 CFR 242.601–603.

[45] *See, e.g.,* Nasdaq Total Markets: A Blueprint for a Better Tomorrow (Apr. 2019), at 17 (''Nasdaq Total Markets Paper''), *available at https://www.nasdaq.com/docs/Nasdaq_TotalMarkets_2019_2.pdf* (characterizing the three Equity Data Plans as ''three bureaucratic, government-mandated monopolies, each with arcane rules and governance, designed in a drastically different time in the evolution of exchanges'').

[46] *See* EMSAC Charter (Feb. 9, 2015), *available at https://www.sec.gov/spotlight/emsac/equity-market-structure-advisory-committee-charter.pdf.* Under the EMSAC Charter, committee membership was required to include at least one representative of retail investors, institutional investors, exchanges or other self-regulatory organizations, broker-dealers and other market participants, as well as industry consultants and academics. *See id.* Although not all exchanges were members of the EMSAC, the EMSAC held a number of public meetings at which other parties, including representatives of exchange groups that were not members of the EMSAC, shared their views. *See* Equity Market Structure Advisory Committee Archives, *available at https://www.sec.gov/spotlight/emsac/emsac-archives.htm* (last accessed Nov. 16, 2019).

Division of Trading and Markets held a Roundtable on Market Data and Market Access (''Roundtable'') that included panelists representing exchanges, institutional and retail broker-dealers, academics, and other market participants.[47] The Commission has also received several petitions for rulemaking from market participants concerning the provision of SIP data and the governance structure of the Equity Data Plans.[48]

Based on this input from a broad range of market participants and its own regulatory experience,[49] the Commission believes that the current governance structure of the Equity Data Plans no longer adequately serves to ensure that the Equity Data Plans provide for the ''prompt, accurate, reliable, and fair collection, processing, distribution, and publication of information with respect to quotations for and transactions in such securities and the fairness and usefulness of the form and content of such information.'' [50] As will be discussed next, the Commission believes that the SROs should propose a single New Consolidated Data Plan, with a governance structure that incorporates a broad array of market participant perspectives and reduces administrative and operational inefficiencies and redundancies, to more effectively administer the dissemination of SIP data.

A. The Commission's Concerns Regarding the Equity Data Plans' Provision of Equity Market Data

Under the Equity Data Plans, the earliest of which dates from the 1970s,[51] market data for each NMS stock is collected, consolidated, and disseminated to investors and market participants through one of two exclusive SIPs. These SIPs, which collect market data for the NMS stock transmitted from the dispersed SRO data centers, then consolidate the data and distribute the data to end-users.[52] Several market developments, however, have given rise to proprietary data feeds that are offered—along with connectivity services that enable low-latency transmission—directly by the various exchanges. The emergence of these proprietary products, along with the core data feeds that are distributed pursuant to the Equity Data Plans, have created a two-tiered market-data environment.

Technological advances, as well as the order routing and trading strategies that have followed, have greatly increased the speed and automation of both markets and trading strategies. These changes, along with the provisions adopted in Regulation NMS that allow for the sale of proprietary data products,[53] have created incentives for exchanges to develop enhanced proprietary data products that they sell to the same market participants that are subscribers to core data feeds provided by the SIPs.

Generally, proprietary data feeds that offer DOB data are designed for automated trading systems and are faster and more content rich, as well as more expensive, than the core data distributed by the SIPs. Other proprietary data feeds that offer TOB data are designed largely for the non-automated segment of the market (*e.g.,* retail investors and wealth managers who look at market information on a screen) and are less content rich (but also less expensive) than the core data distributed by the SIPs.[54] Thus, the exchanges offer proprietary data products in both of these significant segments of the market for data. The exchanges also offer connectivity products and services (*e.g.,* co-location, fiber connectivity, wireless connectivity) that provide low-latency access to these proprietary data products, especially DOB products.[55] Even though the exchanges' proprietary data products are not exact substitutes for the core data provided by the SIPs,[56] users of the low-latency access provided by the exchanges for their DOB proprietary data products have a speed advantage over users of the core data because of the higher latency of the SIP data feeds.

Over the past several years, a number of market participants have raised concerns about how the differences between the SIPs and proprietary DOB data feeds affect their ability to use core data to be competitive in today's markets and provide best execution to their customers.[57] According to certain market participants, the current speed of core data is no longer sufficient for them to trade competitively. One Roundtable panelist stated that broker-dealers do not have the option to forgo buying the proprietary data in meeting their clients' needs because the SIPs are slower and not as expansive.[58] This panelist stated that, ''[i]f our brokers are not aligned in that manner to use the most direct, the fastest, the most robust feeds they can get their hands on, then we will trade with someone else.'' [59] Another

[47] The Roundtable agenda and list of panelists are available on the Commission's website at *https://www.sec.gov/agendas/agenda-roundtable-market-data-market-access.*

[48] *See, e.g.,* Petition for Rulemaking Concerning Market Data Fees (Dec. 6, 2017) (SEC 5–716), *available at https://www.sec.gov/rules/petitions/2017/petn4-716.pdf* (petition undersigned by twenty-four firms, including Bloomberg, Citadel, Fidelity Investments, Morgan Stanley, Charles Schwab, Vanguard, and Virtu) (''Patomak Petition''); Petition to Address Conflicts of Interests, Complexity, and Costs Related to Market Data (Jan. 17, 2018) (SEC 4–717), *available at https://www.sec.gov/rules/petitions/2018/petn4-717.pdf* (''Healthy Markets Petition''); Petition for Rulemaking Regarding Market Data Fees and Request for Guidance on Market Data Licensing Practices; Investor Access to Market Data (Aug. 22, 2018) (SEC 4–728), *available at https://www.sec.gov/rules/petitions/2018/petn4-728.pdf* (''MFA Petition'').

[49] In addition to the Commission's review of proposed amendments filed by the Equity Data Plans, the Commission staff attends the operating committee and subcommittee meetings, with the exception of discussions protected by attorney-client privilege, and conducts examinations of the Equity Data Plans.

[50] 15 U.S.C. 78k–1(c)(1)(B).

[51] *See supra* note 31.

[52] NYSE is the administrator of the SIP for the CTA Plan and CQ Plan, which covers Tape A and Tape B and is located in Mahwah, New Jersey. NYSE's affiliate, Securities Industry Automation Corporation (''SIAC''), serves as the processor for Tapes A and B. Nasdaq is both the administrator and the processor for the UTP Plan, which covers Tape C and is located in Carteret, New Jersey.

[53] *See infra* note 71 and accompanying text.

[54] *See also supra* note 40 and accompanying text.

[55] *See supra* notes 39–40. Various forms of connectivity are integral to the latency and throughput benefits associated with proprietary market data products, especially DOB products. For example, co-location is a service that enables exchange customers to place their servers in close proximity to an exchange's matching engine in order to help minimize network and other types of latencies between the matching engine of the exchange and the servers of market participants. Data connections that use fiber optic cable transmit data more slowly than data connections that use wireless microwave transmissions, though microwave connections are susceptible to interruption by weather conditions and are therefore less reliable than fiber connections. Subscribers of wireless data connections need to establish backup connectivity to account for interference from weather conditions. *See also infra* note 76 and accompanying text.

[56] *See supra* note 38.

[57] *See, e.g.,* Letter from Theodore R. Lazo, Managing Director and Associate General Counsel, SIFMA (Oct. 24, 2014), at 8, *available at https://www.sec.gov/comments/s7-02-10/s70210-422.pdf* (''SIFMA Letter I''); Letter from Theodore R. Lazo, Managing Director and Associate General Counsel, SIFMA (Mar. 29, 2017), at 11, *available at https://www.sec.gov/comments/265-29/26529-1674696-149276.pdf* (''SIFMA Letter II''); Letter from Melissa MacGregor, Managing Director and Associate General Counsel, Theodore R. Lazo, Managing Director and Associate General Counsel, SIFMA (Oct. 24, 2018), at 6, *available at https://www.sec.gov/comments/4-729/4729-4559181-176197.pdf* (''SIFMA Letter III'').

[58] *See* Day One Transcript, *supra* note 38, at 65:8–66:10 (statement of Mehmet Kinak, T. Rowe Price). *See also* Letter from Mehmet Kinak, Vice President—Global Head of Systematic Trading & Market Structure, Jonathan D. Siegel, Vice President—Senior Legal Counsel, T. Rowe Price Associates, Inc. (Jan. 10, 2019), at 2, *available at https://www.sec.gov/comments/4-729/4729-4844471-177204.pdf.*

[59] Day One Transcript, *supra* note 38, at 66:7–10 (statement of Mehmet Kinak, T. Rowe Price); *see also id.* at 136:5–16 (statement of Simon Emrich,

Continued

Roundtable panelist stated that, ''broker-dealers are compelled to purchase exchanges' proprietary data feeds, both to provide competitive execution services . . . and to meet our best execution obligations due to the content of the information contained in the proprietary data fees as well as the latency differences between them. . . .'' [60] Another commenter stated that ''most broker-dealers require the faster and deeper information to participate effectively in the market and provide customers with the competitive order routing quality.'' [61] This commenter also stated, ''While business for proprietary market data innovated, the SIP utilities did not keep pace. Investment in the SIPs lagged, causing material latencies to develop between the top of book and last sale data available from the SIP as compared to the data offered privately by the market centers.'' [62]

Broker-dealer panelists at the Roundtable stated that they are compelled to purchase SIP data for various reasons, including to receive LULD Plan price bands, to perform checks required by Rule 15c3–5 under the Act (the ''market access rule''),[63] and for redundancy purposes.[64] Some broker-dealers use SIP data to comply with the requirements of Rule 611 of Regulation NMS [65] to prevent trade-throughs and to meet their best execution obligations for customer orders. Also, under Rule 603(c) of Regulation NMS,[66] known as the ''Vendor Display Rule,'' if a broker-dealer displays any information with respect to quotations for or transactions in an NMS stock in a context in which a trading or order-routing decision can be implemented, it must also provide a consolidated display for that stock. Broker-dealers typically meet this regulatory requirement by using core data and paying the attendant fees.[67]

The differences between the SIP data feeds and proprietary data feeds have the effect of increasing the demand for, and marketability of, proprietary data products to the financial benefit of the exchanges. And the Commission believes that this conflict of interest, combined with the Equity Data Plans' current governance structure, perpetuates disincentives for the Equity Data Plans to invest in certain improvements to enhance the distribution of core data or the content of the core data itself. In particular, lagging investment in updating and maintaining the operations of the SIPs has resulted in meaningful latency and content differentials between core data and the exchanges' proprietary market data products that have become consequential to market participants.[68]

For example, the implementation of decimalization in 2001 [69] reduced the minimum price increment from $0.0625 (1/16 of a dollar) to $0.01. Because this significantly increased the number of price points over which trading interest could be expressed, it had the ancillary effect of reducing the TOB liquidity that is displayed and disseminated as part of core data. And commenters on Regulation NMS stated that this reduction of TOB liquidity, in turn, increased the importance of information regarding DOB liquidity to market participants.[70]

In adopting Regulation NMS in 2005, the Commission nonetheless determined not to require that DOB quotations be included in core data, reasoning that investors who needed DOB data would be able to obtain that data from markets or third-party vendors.[71] In making that determination, the Commission stated that this would be ''a competition-driven outcome [that] would benefit investors and the markets in general.'' [72] And, after the adoption of Regulation NMS in 2005,[73] exchanges began to sell

Norges Bank Investment Management) (stating that, ''the use cases for SIP data over the years [have] . . . decreased substantially'' and ''brokers can't really be . . . using the SIP. They need to have the full depth of book.'').

[60] Day One Transcript, *supra* note 38, at 198:24–199:6 (statement of Joseph Wald, Clearpool Group); *see also* Letter from Joe Wald, Chief Executive Officer, Clearpool Group (Oct. 23, 2018), at 3, *available at https://www.sec.gov/comments/4-729/4729-4555206-176185.pdf.* The Commission recognizes that, as a practical matter, market participants may utilize proprietary market data products to execute orders. However, the Commission has determined that broker-dealers are not required to purchase ''non-core'' data, such as DOB data, to satisfy their duty of best execution. *See* In the Matter of the Application of Securities Industry and Financial Markets Association, Securities Exchange Act Release No. 84432 at 33, n.174 (Oct. 16, 2018), *available at https://www.sec.gov/litigation/opinions/2018/34-84432.pdf* (''SIFMA Order''). *See also* Shengwei Ding, John Hanna, and Terrence Hendershott, How Slow Is the NBBO? A Comparison with Direct Exchange Feeds, The Financial Review, Issue 49 (2014) (313–332) (comparing the NBBO from the SIP and the NBBO of exchange proprietary data feeds and finding benefits of the faster proprietary data feeds over the SIP), *available at http://utpplan.com/latency_chartshttp://faculty.haas.berkeley.edu/hender/NBBO.pdf;* Michael Lehr, *The Latency Differences Between Depth of Book and BBO Feeds* (Aug. 8, 2016) (comparing relative latency of proprietary DOB and TOP data feeds), *available at http://maystreet.com/api/files/mst_drive/public/TheLatencyDifferenceBetweenDepthAndBBO-MayStreet.pdf;* CTA Latency Charts (providing statistics measuring latency from the inception of the Participant matching engine event (*e.g.,* order execution, top of book update) to the point of dissemination from the CTA SIP), *available at https://www.ctaplan.com/latency-charts* (last accessed Dec. 12, 2019); UTP Realized Latency Charting (providing statistics measuring latency from the inception of the Participant matching engine event (*e.g.,* order execution, top of book update) to the point of dissemination from the UTP SIP), *available at http://utpplan.com/latency_charts* (last accessed Dec. 12, 2019).

[61] SIFMA Letter III, *supra* note 57, at 6.

[62] SIFMA Letter I, *supra* note 57, at 8; *see also* Day One Transcript, *supra* note 38, at 64:4–15 (statement of Brad Katsuyama, IEX) (''Anyone who cares cannot use the SIP from a speed standpoint . . . if full information and speed are important, which it is for the majority of large players maintaining their own electronic trading platform, then I would not say the SIP serves much of a purpose for them.''); at 64:4–15 (statement of Douglas A. Cifu, Virtu) (''Anyone who cares, or is . . . making machine-level decisions cannot use the SIP just from a speed standpoint. But I do think if you improve the information on the SIP, it can certainly be valuable to a host of people now. . . . But if full information and speed become important, which it is for a majority of large players maintaining their own electronic trading platform, then I would not say the SIP serves much of a purpose to them.''). *See also infra* notes 80–82 and accompanying text (describing certain improvements made to aggregation latency in the SIP feeds).

[63] 17 CFR 240.15c3–5.

[64] *See, e.g.,* Day One Transcript, *supra* note 38, at 138:23–139:3, 169:12–24 (statements of Adam Inzirillo, Bank of America Merrill Lynch); at 184:14–185:2 (statement of Michael Friedman, Trillium).

[65] 17 CFR 242.611.

[66] 17 CFR 242.603(c).

[67] *See* Patomak Petition, *supra* note 48, at 1 (''As required by the SEC's Display Rule, vendors and broker-dealers are required to display consolidated data from all the market centers that trade a stock. In order to comply with the Display Rule, such vendors and broker-dealers must purchase and display consolidated data feeds distributed by securities information processors ('SIPs'), which are owned by the exchanges and operated pursuant to NMS plans. The fees charged by SIPs are distributed as income to each of the participating exchanges.'').

[68] For example, and as described further above, many broker-dealers have represented to the Commission that they are effectively compelled to purchase and rely primarily upon the low-latency proprietary data feeds in order to meet their regulatory obligations and to compete in the equity markets. *See supra* notes 59–62 and accompanying text.

[69] *See* Commission Notice: Decimals Implementation Plan for the Equities and Options Markets (July 24, 2000), *available at https://www.sec.gov/rules/other/decimalp.htm.*

[70] *See, e.g.,* Regulation NMS Release, *supra* note 6, 70 FR at 37529 (noting a comment from the Consumer Federation of America concerning ''complaints that decimal pricing has reduced price transparency because of the relatively thin volume of trading interest displayed at the best bid and offer''). *See also* Letter from Craig S. Tyle, General Counsel, Investment Company Institute (Nov. 20, 2001), *available at https://www.ici.org/policy/comments/01_SEC_SUBPENNY_COM* (stating in response to the Commission's Concept Release on the Effects of Decimal Trading in Subpennies in 2001, that ''the reduction in quoted market depth as the minimum quoting increment has narrowed to a penny has adversely affected institutional investors' ability to execute large orders. . . . Preliminary data has shown that, post-decimalization, it has become more difficult for large institutional orders to be filled entirely at the inside.'') (internal citations omitted).

[71] *See* Regulation NMS Release, *supra* note 6, 70 FR at 37567.

[72] *Id.* at 37530.

[73] *See* Regulation NMS Release, *supra* note 6.

their proprietary data products separately from the core data required by Rule 603(b) of Regulation NMS.[74] But, as the markets have evolved and DOB data has become more important, the exchanges have continued to improve their proprietary data feeds without similar improvements to the SIPs to reflect this market evolution.

Another issue flows from the centralized consolidation model of the Equity Data Plans and the SIPs. The centralized consolidation model has at least three specific sources of latency disadvantage relative to the exchanges' proprietary data feeds: geographic latency, aggregation latency, and transmission latency. Geographic latency, as used herein, refers to the time it takes for data to travel from one physical location to another, which must also take into account that data does not always travel between two locations in a straight line. Aggregation latency, as used herein, refers to the amount of time a SIP takes to aggregate the multiple sources of SRO market data into core data and includes calculation of the NBBO.[75] And transmission latency, as used herein, refers to the time interval between when data is sent (*e.g.,* from an exchange) and when it is received (*e.g.,* at a SIP and/or at the data center of the subscriber).[76] The Commission understands that geographic latency is typically the most significant component of the additional latency that core data feeds experience compared to proprietary data feeds.[77] Because each SIP must collect data from geographically dispersed SRO data centers, consolidate the data, and then disseminate it from its location to end-users, which are often in other locations, this hub-and-spoke form of centralized consolidation creates additional latency. For example, information about quotes and trades on Nasdaq for NYSE-listed securities incurs latency as it travels from Nasdaq's data center in Carteret approximately 34.5 miles to the CTA/CQ SIP in Mahwah, and then back to Carteret.[78]

But these disadvantages are not inherent to the SIPs' role and operation in the markets, nor are they insurmountable. In recent years and in the face of ongoing public criticism,[79] the SIP operating committees have made some improvements to aspects of the SIPs and related infrastructure.[80] For example, from the second quarter of 2016 to the second quarter of 2019, Tapes A and B reduced average quote feed aggregation latency from 490 microseconds to 69 microseconds, and average trade feed aggregation latency from 340 microseconds to 139 microseconds.[81] As another example, Tape C reduced its average quote feed aggregation latency during the same period from 777.8 microseconds to 16.9 microseconds, and its average trade feed aggregation latency from 604.8 microseconds to 17.5 microseconds.[82] As shown by these latency statistics, however, aggregation latency for the CTA/CQ SIP data continues to be meaningfully greater than that of UTP SIP data, despite these improvements.[83]

[74] *See supra* notes 39–40 and accompanying text.

[75] Each SIP must collect data from the dispersed SRO data centers, consolidate the data, and then disseminate the core data from their locations to end-users. *See* Equity Market Structure Concept Release, *supra* note 22, 75 FR at 3611 (''Given the extra step required for SROs to transmit market data to plan processors, and for plan processors to consolidate the information and distribute it to the public, the information in the individual data feeds of exchanges and ECNs generally reaches market participants faster than the same information in the consolidated data feeds.''). As discussed further in the Order, aggregation latency continues to remain at inferior levels at the CTA/CQ SIP as compared to the UTP SIP. *See infra* notes 81–82 and accompanying text. Furthermore, market participants that use proprietary data feeds for their electronic trading tools and that use certain common order types (*e.g.,* intermarket sweep orders, or ''ISOs'') must also aggregate proprietary data feeds to create an NBBO to comply with Rule 611 of Regulation NMS. Thus, aggregation latency can also be a factor for users of proprietary data feeds and is not unique to the SIPs.

[76] The transmission latency between two fixed points is determined by the transmission communications technology through which the data is conveyed (*e.g.,* fiber optic cables, microwave networks, laser transmission). The modes of transmission for core data are typically slower than the modes of transmission used for proprietary data. In general, the Equity Data Plans rely on fiber optic cables for connectivity. For example, the NYSE, as the operator of the CTA/CQ SIP, requires that access to the CTA/CQ SIP be through the use of the NYSE's IP local area network. At the same time, NYSE, which owns SIAC, the CTA/CQ SIP, offers non-SIP proprietary data transmission to end-users via faster microwave networks. *See, e.g.,* ICE Global Network: Chicago—New Jersey, *available at https://www.theice.com/market-data/connectivity-and-feeds/wireless/chicago-to-new-jersey* (last accessed Sept. 16, 2019) (describing ICE's microwave route between the Chicago metro trading hub to Nasdaq's data center in Carteret, NJ); ICE Global Network: New Jersey Metro, *available at https://www.theice.com/market-data/connectivity-and-feeds/wireless/new-jersey-metro* (last accessed Sept. 16, 2019) (describing ICE's laser and millimeter wave route between ICE's Mahwah data center and the Carteret and Secaucus data centers).

[77] *See, e.g.,* Letter from Michael Blaugrund, Head of Transactions, NYSE (Oct. 24, 2018), at 1, *available at https://www.sec.gov/comments/4-729/4729-4559383-176200.pdf* (stating that, as ''processing time approaches zero, it is clear that the time required for trade and quote data to travel from Participant datacenter -> SIP datacenter -> Recipient datacenter, or 'geographic latency,' is a larger portion of the total latency'').

[78] *See* Day One Transcript, *supra* note 38, at 127:12–24 (statement of Mark Skalabrin, Redline Trading Solutions) (stating that customers cannot be competitive using SIP data due to geographic latency, explaining ''[i]f you're sitting at Secaucus and you get a direct feed tick from BATS, it shows up in a few microseconds from when they publish it. That same tick for the SIP for Nasdaq-listed symbols goes to Carteret, for NYSE-listed symbols they go to Mahwah and they come back again. The real numbers are, for one, about 350 microseconds and the other about close to a millisecond in latency for those to show up for someone using the SIP to get the BATS tick. So this is just an architectural—an obsolete architecture for an automated trading system in today's world. . . . You can't be competitive with those kind of latencies compared to just getting it directly from the exchange.'').

[79] For example, following the UTP SIP outage on August 22, 2018 that led to a multiple hour, market-wide halt in trading of Nasdaq-listed securities (''UTP SIP Outage''), market participants raised concerns about the adequacy of the SIP infrastructure. *See, e.g.,* USA TODAY, Outage Slams Nasdaq's Reputation (Aug. 22, 2013), *available at https://www.usatoday.com/story/money/markets/2013/08/22/nasdaq-trading-freeze-reputation/2686883/;* Wall Street Journal, Panel to Review Nasdaq Data-Feed Outage (Aug. 28, 2013), *available at https://www.wsj.com/articles/panel-to-review-nasdaq-datafeed-outage-1377715288;* Wall Street Journal, Nasdaq Shutdown Bares Stock Exchange Flaws (Aug. 24, 2013), *available at https://www.wsj.com/articles/nasdaq-shutdown-bares-stock-exchange-flaws-1377382817?tesla=y.*

[80] Following the UTP SIP Outage—and a meeting between the equities and options exchanges, FINRA, DTCC, and the Options Clearing Corporation and the then-Chair of the Commission—the Equity Data Plans' operating committees discussed with Commission staff the operating committees' plans for the SIPs ''designed to improve operational resiliency, strengthen interoperability standards and disaster recovery capabilities, enhance governance, accountability, and establish a clear testing framework for the industry.'' *See* Self-Regulatory Organizations Response to SEC for Strengthening Critical Market Infrastructure (Nov. 12, 2013), *available at https://ir.theice.com/press/press-releases/all-categories/2013/11-12-2013. See also* SIP Operating Committee Statement, *supra* note 75 (''In the last three years, the SIP Operating Committees have invested in the technology that powers them, increasing resiliency and redundancy while reducing latency.''). *See also* Letter from NYSE at 3 (Oct. 24, 2018), *available at https://www.sec.gov/comments/4-729/4729-4559414-176201.pdf* (''NYSE Group Letter'') (stating that, ''exchanges have invested significantly in the operation of the [SIPs], resulting in improved resilience and reduced latency, all while managing increased volumes'').

[81] *See* Key Operating Metrics of Tape A & B U.S. Equities Securities Information Processor (CTA SIP), *available at https://www.ctaplan.com/publicdocs/ctaplan/notifications/trader-update/Q2%202019%20CTA%20SIP-Subscribers%20Metrics%20Report.pdf.*

[82] *See* UTP Q3 2019—July Tape C Quote and Trade Metrics, *available at http://www.utpplan.com/DOC/UTP_website_Statistics_Q3-2019-July.pdf.* These latencies are perceived to be at or near competitive market standards. *See also* Day One Transcript, *supra* note 38, at 106:14–22 (statement of Oliver Albers, Nasdaq) (''There have been vast improvements in SIP data in recent years, even as SIP revenue to exchanges has fallen. The Nasdaq SIP has an average latency of just 16 millionths of a second. . .. The Nasdaq SIP can also handle 10 billion messages per day, 20 times more than a decade ago, and significant cybersecurity and fraud prevention investments by Nasdaq and other operators have increased the overall market efficiency and resiliency.'').

[83] *See* Nasdaq Total Markets Paper, *supra* note 45, at 19, n.19 (stating that the CTA SIP ''currently operates with over 100 microseconds of latency, which is not up to the standard that investors have come to expect in the modern markets''). The Commission notes that the aggregation latency

Continued

And as numerous new product offerings have been introduced by individual exchanges to reduce the latency of proprietary data products,[84] the Equity Data Plans, which are operated jointly by the SROs (including those offering proprietary data products), have not made—or have been slow to make [85]—the investments that are necessary to comprehensively address these concerns.[86] For example, proprietary data products offered by the exchanges often rely on low-latency wireless connections,[87] whereas the Equity Data Plans rely on fiber optic cable.[88] The Commission understands that these fiber networks, which the exchanges use to transmit data from their matching engines to the SIPs, are meaningfully slower than the wireless networks operated by the same exchanges for the transmission of proprietary data over the same routes.

As a potential measure to help the SIPs' data products better respond to the needs of users, some market participants, including exchanges, have suggested that geographic latency issues could be addressed through a ''distributed SIP'' model.[89] Under a distributed SIP model, each exclusive SIP could place an additional processor in other major data centers, which would separately aggregate and disseminate consolidated market data for its respective tape. The SROs would submit their quotations and trade information directly to each SIP location in each data center, and each SIP location would consolidate and disseminate its respective consolidated market data feeds to subscribers at those data centers. As a result, consolidated market data would not have to travel from an exchange at one location to a centralized SIP at a second location for consolidation and dissemination prior to traveling yet again to a subscriber that may be at a third location, significantly reducing geographic latency. But, despite consideration by the dedicated subcommittee established by one of the Equity Data Plans,[90] none of the Equity Data Plans' operating committees has yet addressed the SIPs' geographic latency disadvantages.

The Commission recognizes that, as discussed above, the SROs have made certain improvements to the SIPs over the past several years, including upgrades that resulted in meaningful reductions in the time required to calculate and consolidate the NBBO. The Participants have also enhanced the content of the SIP feeds, including reports of odd-lot trades.[91] The Participants have also requested comment on a proposal to include odd-lot quotation information in response to the rise in odd-lot activity in the U.S. equity markets.[92] In addition, Nasdaq migrated its SIP to a new technology platform in 2016 and stated that the update ''significantly improves the efficiency, resiliency, and reliability of the SIP in a meaningful and measurable way.'' [93] And NYSE has publicly stated that it has undertaken two projects to enhance the SIP: (1) Building a new, dedicated network for SIP data to provide faster subscriber access to SIP data, and (2) migrating its SIP data feed engine to the NYSE's Pillar technology platform to reduce processing time and enhance resilience.[94]

Despite these changes, the SIPs have continued to meaningfully lag behind the proprietary data products and their related infrastructure with respect to content and speed. And while the Equity Data Plans' operating committees have discussed several ideas that could result in significant improvements to the SIPs both in terms of content and speed—ideas that could further reduce performance gaps when compared with proprietary data and its infrastructure [95]—these potential upgrades have failed to garner the support by Participants necessary for action.[96] Thus, market participants that choose to pay for some or all of the DOB proprietary data feeds can consolidate those feeds and receive more comprehensive market data, and can receive it faster, than those who rely on the SIP feeds.[97] As a result, significant information asymmetries persist between users of core data and users of proprietary DOB data, as well as potential disadvantages for market participants who do not access the

incurred by market participants that consolidate the exchanges' proprietary data feeds for their own or their customers' use is not publicly available, making it difficult to compare the aggregation latency of the SIP feeds and the aggregated proprietary feeds.

[84] *See, e.g.,* Nasdaq Trade Management Services—Wireless Connectivity Suite (last accessed on Nov. 13, 2019), *available at http://n.nasdaq.com/WirelessConnectivitySuite* (describing low-latency wireless network technology to deliver market data); ICE Global Network—Wireless (last accessed on Nov. 13, 2019), *available at https://www.theice.com/market-data/connectivity-and-feeds/wireless* (describing low-latency wireless connectivity options between trading hubs).

[85] *See, e.g., supra* note 62.

[86] *See, e.g.,* SIFMA Letter II, *supra* note 57, at 8–9; SIFMA Letter III, *supra* note 57, at 12; Letter from John Ramsay, Chief Market Policy Officer, IEX, at 3 (Sept. 24, 2019) (''IEX Letter''), *available at https://www.sec.gov/comments/4-729/4729-6190352-192448.pdf.*

[87] Some of these services are solely offered by exchanges within the facility of an exchange (*e.g.,* co-location connectivity at NYSE's data center in Mahwah and NASDAQ's co-location at its datacenter in Carteret) and some are offered by both exchanges and other third party providers (*e.g.,* fiber and wireless connectivity between data centers). *See, e.g., supra* note 84.

[88] *See supra* note 76.

[89] *See* Day One Transcript, *supra* note 38, at 99:2–4 (statement of Stacey Cunningham, NYSE) (''There is debate the NYSE brought to the SIP Committee a long time ago to talk about the nature of a distributed SIP and that is something we should explore.''); at 117:7–10 (statement of Michael Blaugrund, NYSE) (recommending that the Commission undertake an analysis of the cost and benefits to the industry of a shift to a distributed SIP model); at 228:3–9 (statement of Chris Isaacson, Cboe) (''we're open to discussion about distributed SIPs''); at 231:23 (statement of Vlad Khandros, UBS) (stating that ''having a distributed SIP has a lot of merit to solve for the latency differences that are inherent in the current structure.''). *See also* Nasdaq Total Markets Paper, *supra* note 45, at 19 (''Distributed SIPs would reduce time spent transmitting quote information between an exchange (and firm) located in one data center and a SIP (and other firms) located in a different center.''); and SIFMA Letter II, *supra* note 57, at 3. *See also* NYSE Group Letter, *supra* note 84.

[90] The Commission's understanding that the Distributed SIP subcommittee has considered and continues to consider potential improvements to address geographic latency disadvantages is based on information obtained by the Commission or its staff as part of the Commission's oversight of the Equity Data Plans.

[91] *See, e.g.,* Securities Exchange Release Nos. 70793 (Oct. 31, 2013), 78 FR 66788 (Nov. 6, 2013) (order approving Amendment No. 30 to the UTP Plan to require odd-lot transactions to be reported to consolidated tape); 70794 (Oct. 31, 2013), 78 FR 66789 (Nov. 6, 2013) (order approving Eighteenth Substantive Amendment to the Second Restatement of the CTA Plan to require odd-lot transactions to be reported to consolidated tape).

[92] *See* Equity Data Plan Odd Lot Proposal (announced Oct. 2, 2019), *available at https://www.ctaplan.com/publicdocs/CTA_Odd_Lots_Proposal.pdf* and *http://www.utpplan.com/DOC/Odd_Lots_Proposal.pdf. See* NYSE Sharing Data-Driven Insights—Stock Quotes and Trade Data: One Size Doesn't Fit All (Aug. 22, 2019), *available at https://www.nyse.com/equities-insights#20190822* (last accessed Nov. 16, 2019) (''NYSE Insights'').

[93] Securities Information Processor (SIP) Migrates to the Nasdaq Financial Framework and INET Technology (Oct. 24, 2016), *available at https://www.globenewswire.com/news-release/2016/10/24/882097/0/en/Securities-Information-Processor-SIP-Migrates-to-the-Nasdaq-Financial-Framework-and-INET-Technology.html* (last accessed on Nov. 18, 2019).

[94] *See* NYSE Insights, *supra* note 92.

[95] *See supra* note 89 and accompanying text.

[96] *See, e.g.,* NYSE Insights, *supra* note 92 (proposing to replace the SIP feeds with three tiered levels of service, including certain DOB data, based on the needs of specific types of investors); Nasdaq Total Markets Paper, *supra* note 45, at 22 (discussing a single processor alternative and stating, ''Now that all exchanges trade all listed stocks, there no longer exists a bank, brokerage or rational basis for maintaining separate network processors and administrators based on historical listings decisions.''); *supra* note 89 and accompanying text (describing discussions regarding a distributed SIP model.). *See also* discussion accompanying note 116, *infra* (discussing proposal to add auction data to the SIP feeds).

[97] The fees for data and connectivity can be substantial and the fees for proprietary DOB products and connectivity have increased significantly in recent years. *See* SIFMA Order, *supra* note 60, at 46–49 (providing examples of exchange proprietary market data fee increases).

additional content included in proprietary data.[98]

As discussed further below, the Commission believes that, under the current governance structure of the Equity Data Plans, improvements to the SIPs to adequately address important product, performance and pricing differentials between the SIPs and proprietary data products have not occurred.[99] This failure contributes to the divergence in the usefulness of core data provided by the SIPs for some market participants compared to the proprietary data feeds. The Commission also believes that addressing these governance issues is an important first step in responding to concerns about the consolidated data feed.

B. Conflicts of Interest Inherent in the Governance Model and Structure of the Equity Data Plans

The Equity Data Plans provide the regulatory framework for the administration of SIP data. When it adopted Regulation NMS in 2005, the Commission contemplated that exchanges would offer proprietary market data feeds with greater content than the SIP feeds and that market participants might elect to purchase those feeds.[100] However, since the adoption of Regulation NMS in 2005,[101] the structure of the equity markets and the corporate structure of exchanges have changed dramatically.

In addition to the technological developments already discussed, changes in the ownership structure of exchanges—in particular the demutualization of the exchanges and the rise of ''exchange groups''—have created conflicts between the SROs' business interests and the need to ensure prompt, accurate, reliable, and fair dissemination of core data through the jointly administered Equity Data Plans consistent with their obligations as SROs under the national market system.[102] As noted above, the Commission believes that these changes, combined with the Equity Data Plans' current governance structure, have exacerbated the exchanges' lack of incentives to improve the SIPs. And, as described further below, the Commission's views on the effect of conflicts of interest on the exchanges' incentives are informed by input received over the course of a number of years from a broad range of market participants—including industry trade associations, broker-dealers (both those with a retail customer base and those with an institutional investor customer base), and the SROs themselves—through their participation in Commission-sponsored forums (*i.e.,* the EMSAC[103] and the Roundtable[104]) and through the submission of comment letters[105] and petitions for rulemaking.[106]

1. The Transformation of the Exchanges Into Publicly Owned Companies

When the Equity Data Plans were created, U.S. equity exchanges were member owned, not-for-profit organizations. The members that owned the exchanges were registered broker-dealers, and those members had a voice in exchange decisions through their voting power on the governing bodies of the exchanges, including with respect to Equity Data Plan matters.

When the exchanges demutualized, representation on exchange boards of directors broadened to require including non-industry representatives,[107] thereby diluting exchange member representation, and the majority of the exchanges became part of publicly held companies seeking to maximize shareholder value. With this transformation, and following the adoption of Regulation NMS, many of the exchanges began to more actively pursue commercial interests that did not necessarily further the regulatory objective to ''preserve the integrity and affordability of the consolidated data stream,''[108] which is necessary to ensure that there is a ''comprehensive, accurate, and reliable source of information for the prices and volume of any NMS stock at any time during the trading day.''[109]

An important example of this divergence of interest has been the development by certain exchanges of proprietary data products with reduced latency and expanded content (*i.e.,* proprietary DOB data products), without the exchanges, in their role as Participants, similarly enhancing the data products offered by the Equity Data Plans. As discussed above, these DOB products have evolved to be considered competitive necessities for many market participants and are offered at significant premiums to SIP products.[110] Another example of the divergence between commercial interests and regulatory goals has been the development by certain exchanges of limited TOB data products,[111] which are offered at a discount compared to the SIP and marketed to a more price-sensitive segment of the market, without corresponding development by the Equity Data Plans of a less expensive SIP product for the price-sensitive segment of the market.[112] The exchanges have continued to develop and enhance their proprietary market data businesses—which generate

[98] *See, e.g., supra* notes 80–82 and accompanying text. *See, e.g., supra* note 89 and accompanying text. A petition for rulemaking submitted to the Commission before the Roundtable emphasized the inherent conflict of interest in the exchanges' proprietary feeds competing with the SIPs, arguing that the greater the latency between the SIPs and the proprietary data feeds, the greater the market value of the exchange's proprietary feeds. *See* Healthy Markets Petition, *supra* note 48, at 6.

[99] *See infra* notes 110–119 and accompanying text.

[100] *See* Regulation NMS Release, *supra* note 6, 70 FR at 37569.

[101] *See* Regulation NMS Release, *supra* note 6.

[102] *See* 15 U.S.C. 78k–1(c)(1)(B) (stating that the Commission shall prescribe ''rules and regulations as necessary and appropriate in the public interest, for the protection of investors, to assure the prompt, accurate, reliable, and fair collection, processing, distribution, and publication of information with respect to quotations for and transactions in such securities and the fairness and usefulness of the form and content of such information'').

[103] *See supra* note 46 and *infra* notes 121 and 136.

[104] *See supra* note 47.

[105] *See* comments on Roundtable on Market Data and Market Access, *available at https://www.sec.gov/comments/4-729/4-729.htm;* comments on EMSAC, *available at https://www.sec.gov/comments/265-29/265-29.shtml.*

[106] *See supra* note 48.

[107] *See, e.g.,* Securities Exchange Act Release Nos. 49098 (Jan. 16, 2004), 69 FR 3974, 3979 (Jan. 27, 2004) (SR–PHLX–2003–73) (approving demutualization of Philadelphia Stock Exchange under by-laws providing for 11 non-industry governors and ten industry governors, of which five would be on-floor governors); 51149 (Feb. 8, 2005), 70 FR 7531, 7534 (Feb. 14, 2005) (SR–CHX–2004–26) (approving demutualization of Chicago Stock Exchange under bylaws that provided that half of the board must be public directors, with the remaining directors to be the exchange's CEO and participant directors); 53963 (June 8, 2006), 71 FR 34661, 34671 (June 15, 2006) (SR–NSX–2006–03) (approving demutualization of the National Stock Exchange under bylaws that provided for at least 50% independent directors and at least 20% directors representing exchange trading permit holders); and Securities Exchange Act Release No. 58375 (Aug. 18, 2008), 73 FR 49498, 49500 (Aug. 21, 2008) (Application of BATS Exchange, Inc. for Registration as a National Securities Exchange; Findings, Opinion, and Order of the Commission) (stating that the non-industry directors will exceed the number of industry and member directors and that at least 20% of the directors will be member directors).

[108] Regulation NMS Release, *supra* note 6, 70 FR at 37503.

[109] Equity Market Structure Concept Release, *supra* note 22, 75 FR at 3600.

[110] *See supra* notes 57–62 and accompanying text.

[111] *See supra* note 40 and accompanying text (describing examples of exchange TOB products).

[112] The use of TOB products has expanded among retail and professional investors, who typically use TOB data via visual displays. However, these feeds do not show the full NBBO and therefore cannot be used to comply with the Vendor Display Rule. The Vendor Display Rule requires vendors and broker-dealers to display consolidated data from all the market centers that trade a stock in a context in which a trading or order routing decision can be implemented. In order to comply with the Vendor Display Rule, vendors and broker-dealers typically purchase and display consolidated data distributed by the SIPs. *See* 17 CFR 242.603. *See supra* notes 26, 38.

revenues that, unlike Plan data revenues, do not have to be shared with the other SROs—while remaining fully responsible for the governance and operations of the Plans, including content, infrastructure, and pricing, as well as data consolidation and dissemination.

Many non-SRO Roundtable panelists, commenters, and petitioners identified these circumstances as constituting an inherent conflict of interest in that the exchanges oversee the Equity Data Plans while selling their own proprietary feeds and connectivity services.[113] One commenter stated that the ''exchanges maintain tight control of SIP governance to protect their lucrative market data revenue (plus associated SIP connectivity costs). . . .''[114] This commenter also stated that ''[g]iven conflicts of interest when a market competitor is also a regulator, it is critical that broker-dealers and asset managers have representation on SIP Operating Committees to ensure accountability and to promote initiatives to better develop market data products.''[115] One exchange stated that, in addition to an exchange's proprietary data products, other circumstances in which an exchange's conflicts of interest may affect the work of the Equity Data Plans' operating committees include consideration of whether auction data should be added to the SIPs and competition among the SROs for the role of processor.[116] In contrast, another exchange maintained that selling exchange proprietary market data was contemplated under Regulation NMS and that doing what Regulation NMS contemplates does not itself create a conflict of interest.[117]

Moreover, the Equity Data Plans are currently administered by two of the exchanges,[118] which gives employees of those exchanges access to confidential data subscriber information of potentially significant commercial value, including subscriber audit information. The Commission notes that concerns have been raised about the exchange administrators' use of market data and associated customer information obtained through their role as Equity Market Data Plan administrators for their proprietary data feed businesses.[119]

Consequently, the Commission believes that the exchanges' commercial interests in their proprietary data businesses, as well as the exchange administrators' access to confidential subscriber information, have created conflicts of interest that could influence decisions as to the Equity Data Plans' operation and thereby impede their ability to ensure the ''prompt, accurate, reliable, and fair collection, processing, distribution, and publication of information with respect to quotations for and transactions in such securities and the fairness and usefulness of the form and content of such information.''[120]

2. The Emergence of Exchange Groups

In addition to the demutualization of the exchanges and the rise of proprietary data feeds, another significant change in the SRO landscape has been the emergence of exchange groups. As acknowledged by the EMSAC[121] and echoed by Roundtable participants,[122] the proliferation of exchange groups has had a significant effect on the allocation and concentration of voting power among certain SROs serving on the Equity Data Plans' operating committee.

Under the Equity Data Plans, each Participant is entitled to cast one vote, but the exchanges within each exchange group vote as a block. Currently, 14 of the 17 total votes are controlled by three exchange groups: (1) CBOE Holdings, Inc. has five votes (BYX, BZX, Cboe, EDGA, and EDGX); (2) Intercontinental Exchange Group, Inc. (''ICE'') has five votes (NYSE, NYSE American, NYSE Arca, NYSE Chicago, and NYSE National); and (3) Nasdaq, Inc. has four votes (BX, ISE, Nasdaq, and PHLX).[123] As a result, the votes of only two exchange groups are sufficient to command a majority of votes and thereby control significant Equity Data Plan actions, including decisions that affect: (a) The capacity of the Equity Data Plans to transmit SIP data,[124] (b) investments in infrastructure that could in turn affect performance and latency of Plan processors, (c) the fees charged for SIP data,[125] and (d) the selection of individuals that participate in advisory committees.[126]

The Commission believes that the consolidation of most of the exchange SROs into exchange groups has altered the relative voting power of Equity Data Plan Participants so that exchange groups now have greater voting power with respect to Plan governance matters. Correspondingly, the relative voting power of unaffiliated Equity Data Plans'

[113] *See, e.g.,* Transcript of Day Two, Roundtable (Oct. 26, 2018), *available at https://www.sec.gov/spotlight/equity-market-structure-roundtables/roundtable-market-data-market-access-102618-transcript.pdf* (''Day Two Transcript''), at 117:14–22 (statement of Richard Ketchum, Former CEO of FINRA); at 121:3–17 (statement of Michael Mason, Citigroup); 138:1–4 (statement of Kevin Cronin, Invesco); SIFMA Letter III, *supra* note 57, at 7 (stating that ''exchanges offer their own proprietary feeds, some of which are designed to compete with the SIPs, while at the same time the exchanges operate the SIPs and control the SIP operating committees''); Letter from Theodore R. Lazo, Managing Director and Associate General Counsel, SIFMA (Sept. 18, 2019), at 3–4, *available at https://www.sec.gov/comments/4-729/4729-6148210-192292.pdf* (''SIFMA Letter IV'') (stating that the current SIP governance structure ''impedes the SIP from competing with the exchanges' proprietary data feeds.''); Letter from CTA/UTP Advisory Committee (Oct. 23, 2018), at 2, *available at https://www.sec.gov/comments/4-729/4729-4553088-176181.pdf* (''CTA/UTP Letter'') (''A perceived conflict is the lack of separation between CTA/UTP and proprietary data interests. An information barrier between CTA/UTP and exchanges' proprietary offering does not work in practice as the same individuals may represent both CTA/UTP and exchange proprietary data products.''); Letter from Tyler Gellasch, Executive Director, Healthy Markets Association (Oct. 23, 2018), at 11, *available at https://www.sec.gov/comments/4-729/4729-4554022-176182.pdf* (''Healthy Markets Letter'') (''One of the most direct conflicts of interest is that the exchanges effectively control the public market data stream while also competing with it.''); Healthy Markets Petition, *supra* note 48, at 6 (noting that the greater the latency between the SIPs and the proprietary data feeds, the greater the market value of the exchange's proprietary feeds); IEX Letter, supra note 86; Patomak Petition, *supra* note 48, at 1 (''Exchanges exercise complete control over key aspects of NMS plan governance, including setting fees, and this governance structure exacerbates conflicts of interest and allows exchanges to promulgate rules unilaterally to the detriment of broker-dealers and buy-side representatives.''); MFA Petition, *supra* note 48, at 13 (''SIP governance model under Regulation NMS does not effectively mitigate conflicts of interest.'').

[114] Letter from Marcy Pike, SVP, Enterprise Infrastructure, Krista Ryan, VP, Associate General Counsel, Fidelity Investments (Oct. 26, 2018), at 4, *available at https://www.sec.gov/comments/4-729/4729-4566044-176136.pdf* (''Fidelity Letter'').

[115] *Id.*

[116] *See, e.g.,* Day Two Transcript, *supra* note 113, at 123:14–127:3 (statement of John Ramsay, IEX) (''For over a year I've been pushing to try to get auction data added to the SIP that would make it more useful . . . . [but] there is at least one or more exchanges that will say, well, it requires unanimity, and therefore it's not going to happen.'').

[117] *See* NYSE Group Letter, *supra* note 84, at 19.

[118] Currently, NYSE operates as the administrator for the CTA Plan and the CQ Plan, while Nasdaq serves as the administrator for the UTP Plan.

[119] *See, e.g.,* Letter from Tyler Gellasch, Executive Director, Healthy Markets Association (Dec. 12, 2018), *available at https://www.sec.gov/comments/4-729/4729-6413383-198487.pdf.* In addition, commenters have expressed concerns with the burdens imposed by the SIPs' subscriber audits and have stated that these burdens create an incentive to purchase exchange TOB products. *See infra* notes 164–165 and accompanying text.

[120] 15 U.S.C. 78k–1(c)(1)(B).

[121] *See, e.g.,* Transcript of EMSAC Meeting (Apr. 26, 2016), at 0106:8–24 (statement of Richard Ketchum, Former CEO of FINRA), *available at https://www.sec.gov/spotlight/emsac/emsac-042616-transcript.txt* (''EMSAC Transcript'').

[122] *See, e.g.,* Day Two Transcript, *supra* note 113, at 148:5–18 (statement of Kevin Cronin, Invesco).

[123] In addition to these three exchange groups, each of the three unaffiliated SROs (FINRA, IEX, and LTSE) currently has one vote, resulting in a total of 17 Participant votes in Equity Data Plan matters.

[124] *See, e.g.,* Section IV.(a) and Exhibit A of the CTA Plan.

[125] *See, e.g.,* Section IV.(b)(iii) of the CTA Plan.

[126] *See, e.g.,* Section XII.(b)(iii) of the CTA Plan.

Participants has been diluted over time. Exchanges that historically had only one vote have now been consolidated into exchange groups under common management that can control blocks of four or five votes.[127] Consequently, any two exchange groups can now command a majority of votes on the Equity Data Plans' operating committee, while the relative voting power of unaffiliated Equity Data Plan Participants has been diluted over time. Notably, as the primary producers of exchange proprietary data products, these exchange groups' voting power on the Equity Data Plans exacerbates the conflicts between their business interests and their regulatory obligations.[128] Accordingly, the Commission believes that the current voting structure may not promote the goals of Section 11A of the Act [129] with respect to equity market data.

C. The Governance Structure of the New Consolidated Data Plan

As discussed below, the Commission believes that the existing Equity Data Plans should be replaced by a single New Consolidated Data Plan with a modernized governance structure.

1. Exchange Group Voting Power

Several interested parties have suggested various ways to realign Participants' voting power. In response to the Roundtable,[130] several panelists and commenters recommended that SRO voting rights be limited to one vote per exchange group,[131] which they believe would increase the voting representation of unaffiliated exchanges.[132] Panelists and one commenter also supported having voting provisions that reflect market size, so that the SROs with greater market share would have increased voting power.[133] One commenter recommended capping the voting control permissible for any single exchange group.[134] One panelist supported maintaining the current voting construct and highlighted the importance of protecting the voting rights of the unaffiliated SROs that have just one vote on the operating committee.[135] In addition, the EMSAC recommended that the existing one-vote-per-exchange model should be replaced with an allocation of voting rights at the exchange group level—resulting in one vote per exchange group.[136] The EMSAC recommended that an exchange group receive two votes, however, when the exchange group has consolidated market share of at least 10% in the particular market relevant to the Equity Data Plan.

NYSE and Nasdaq objected to the EMSAC recommendation to reallocate votes among Equity Data Plan Participants by exchange group.[137] In particular, Nasdaq argued that it would be inconsistent for the Commission not to provide each SRO with a vote when, in Nasdaq's view, the Commission has consistently held that each SRO is individually approved by the Commission and must have its own systems, rules, operations, and members.[138]

The Commission believes that the New Consolidated Data Plan should modify the current voting allocation structure to address the issues described above.[139] Consistent with the EMSAC recommendation, the Commission believes that voting rights in the New Consolidated Data Plan should be allocated so that each unaffiliated SRO [140] and exchange group has one vote on the operating committee—with a second vote provided if the exchange group or unaffiliated SRO has a market center or centers that trade more than a designated percentage of consolidated equity market share.[141]

However, the Commission believes that the threshold percentage should be 15%, rather than the 10% threshold recommended by the EMSAC. The EMSAC's recommendation to the Commission concedes that there was no ''magic'' in selecting 10% as its

[127] For example, for years the NYSE held a single exchange license and therefore had only one vote on the Equity Data Plans' operating committees, despite having approximately 80% of the trading volume in NYSE-listed securities. Today, the NYSE group of SROs as a whole has approximately 30% market share of trading in NYSE-listed securities, but because the NYSE group holds five exchange licenses, it has five votes and significantly more influence over Equity Data Plans' decisions than before. *See* Cboe U.S. Equities Volume Data, *available at https://markets.cboe.com/us/equities/market_share/* (last accessed Aug. 11, 2019) (month-to-date volume summary as of Aug. 9, 2019).

[128] Specifically, the three exchange groups, which represent 14 of the 17 votes on the operating committees of the Equity Data Plans, sell proprietary data products that are significant sources of revenues for these exchanges. Consequently, the Commission believes that they may not be incentivized to adequately improve the latency of the SIPs, as making SIP latency comparable to the proprietary feeds could decrease revenues earned from certain proprietary data products. *See, e.g.,* Clearpool Group Viewpoints Rethinking the Current Market Structure (Sept. 2019), at 7 (stating, ''Currently, SIP Plans are governed by SROs that have conflicts of interest in the provision of market data (*i.e.,* the exchanges, excluding FINRA) as they are selling market data products that directly compete with the SIPs. These SROs therefore have a disincentive to either invest in the SIPs or to make SIPs competitive products to their proprietary data products, and it is unlikely that they would vote to make needed changes to the SIP Plans.''), *available at https://cdn2.hubspot.net/hubfs/1855665/Clearpool%20Group%20Viewpoints%20-%20September%202019%20FINAL.pdf. See also* IEX Letter, *supra* note 86, at 3 (''SIP governance is still under the control of exchanges that have no reason to want the SIPs to be competitive with their own lucrative feeds. Some exchanges even overtly market their own data as a better alternative to the SIPs. The conflicts of interest are obvious and acute.'').

[129] 15 U.S.C. 78k–1.

[130] *See https://www.sec.gov/spotlight/equity-market-structure-roundtables.*

[131] The recommendation of one vote per exchange group was also included in a pre-Roundtable petition for rulemaking that was submitted to the Commission. *See* Healthy Markets Petition, *supra* note 48, at 6 (supporting ''one vote per exchange group'').

[132] *See, e.g.,* Day Two Transcript, *supra* note 113, at 148:5–12 (statement of Kevin Cronin, Invesco), *available at https://www.sec.gov/spotlight/equity-market-structure-roundtables/roundtable-market-data-market-access-102618-transcript.pdf;* at 150:12–14 (statement of Hubert de Jesus, Blackrock); at 152:23–153:2 (statement of John Ramsay, IEX); Fidelity Letter, *supra* note 114, at 3 (recommending that NMS plan voting rights be limited to one vote per exchange group); Healthy Markets Letter, *supra* note 113, at 40.

[133] *See, e.g.,* Day Two Transcript, *supra* note 113, at 150:17–21 (statement of Richard Ketchum, Former CEO of FINRA); at 152:6–10 (statement of Michael Masone, Citigroup); SIFMA Letter IV, *supra* note 113, at 4.

[134] *See* SIFMA Letter IV, *supra* note 113, at 4.

[135] *See, e.g.,* Day Two Transcript, *supra* note 113, at 149:1–13 (statement of Emily Kasparov, Chicago Stock Exchange, Inc. (n/k/a NYSE Chicago)).

[136] *See* EMSAC Recommendations Regarding Enhanced Industry Participation in Certain SRO Regulatory Matters (''EMSAC Governance Recommendations''), July 8, 2016, *available at https://www.sec.gov/spotlight/emsac/recommendations-enhanced-industry-participation-sro-reg-matters.pdf;* EMSAC Recommendations Relating to Trading Venues Regulation, April 12, 2016, *available at https://www.sec.gov/spotlight/emsac/emsac-trading-venues-subcommittee-recommendations-041916.pdf.*

[137] *See* Letter from Elizabeth K. King, General Counsel and Corporate Secretary, NYSE (May 13, 2016), *available at https://www.sec.gov/comments/265-29/26529-66.pdf* (''NYSE Letter''); and Letter from Joan Conley, Senior Vice President and Corporate Secretary, Nasdaq (May 24, 2016), *available at https://www.sec.gov/comments/265-29/26529-71.pdf* (''Nasdaq Letter'').

[138] *See* Nasdaq Letter, *supra* note 137, at 7. Nasdaq also argued that the Commission has prevented exchange operating companies from offering ''cross-SRO'' products that bundle products from multiple exchanges, and Nasdaq believes that consolidating voting rights for purposes of the Equity Data Plans would contradict this past treatment of exchange groups by the Commission. *See id.* For the Commission's response to Nasdaq's argument, *see infra* notes 148–151 and accompanying text.

[139] *See supra* notes 127–130 and accompanying text. The Commission notes that the one-vote-per-exchange governance model for NMS plans is not compelled by statute or regulation.

[140] For purposes of this Order, an unaffiliated SRO means an SRO that is not part of the same corporate ownership group as other SROs. The currently unaffiliated SROs are FINRA, IEX, and LTSE.

[141] For purposes of this Order, the Commission considers ''consolidated equity market share'' to mean the average daily dollar equity trading volume of an exchange group or unaffiliated SRO as a percentage of the average daily dollar equity trading volume of all of the SROs, as reported by the Equity Data Plans.

suggested threshold amount,[142] and, based on the current size of the exchange groups in terms of both exchange licenses and trading volume, the Commission believes that using the 10% threshold recommended by the EMSAC for obtaining a second vote on New Consolidated Data Plan matters would suggest that a third vote would be appropriate at 20% of consolidated equity market share. Given that the existing consolidated market share of the largest exchange groups generally ranges from 17% to 23% [143]—as of December 4, 2019, the figures for the CBOE, Nasdaq, and NYSE exchange groups were 17.03%, 19.58%, and 23.05%, respectively [144]— setting the threshold for additional votes at 10% intervals would create the reasonable likelihood that exchange groups might receive a third vote, which would lead to a continuing concentration of voting power.

Accordingly, the Commission believes that setting the threshold for a second vote at 15%, and limiting the total votes available to an exchange group or unaffiliated exchange to two votes, would provide greater relative voting power for the three exchange groups that currently have the highest trading volumes—the CBOE, Nasdaq, and NYSE exchange groups would each get two votes. The Commission believes that a 15% threshold for a second vote on the operating committee would thus provide an exchange group or unaffiliated exchange with extra voting power in recognition of its responsibility as an SRO for the operations of a trading platform that generates a greater share of equity market data. Under this approach, FINRA would not be eligible for a second vote on the operating committee, because, despite facilitating a significant proportion of trade reporting, it does not produce quotations or operate a market center.[145]

The Commission further believes that an exchange group or an unaffiliated exchange should be granted a second vote only if it has maintained consolidated equity market share of at least 15% for at least four of the six calendar months preceding a vote of the operating committee. While exchange group market share has remained relatively steady over the past several years,[146] competition for order flow among the exchanges and the registration of new national securities exchanges that trade equities may lead to more significant changes in market share. The Commission believes that using a look-back period of at least four of the six calendar months preceding a vote of the operating committee for determining whether an exchange group or an unaffiliated exchange has met the threshold for a second vote would allow the voting structure of the New Consolidated Data Plan to adapt over time to changing trading volume among exchanges while avoiding frequent changes in vote allocations as a result of short-term changes in activity.[147]

As noted above, Nasdaq has argued that an approach that limits exchange groups to only one vote would be inconsistent with the Commission's prior action to prevent exchange operating companies from offering "'cross-SRO' products that bundle products from multiple exchanges." [148] The Commission believes, however, that a meaningful distinction exists between, on one hand, examining whether an exchange's proposed rule change unfairly discriminates between market participants and, on the other hand, regulating the actions of multiple SROs in collectively operating critical market systems.[149] Under Section 6 of the Act,[150] the Commission oversees individual exchanges, not exchange groups, regarding, among other things, their obligations to not engage in disparate treatment of their members. In contrast, Section 11A and Rule 608 address the joint responsibilities of multiple SROs to the national market system as a whole, including operating a central utility for market data that has a broader class of stakeholders. Moreover, as discussed above, the Commission believes that, given the current structure of the market for NMS securities, allocating votes on the operating committees for critical market systems simply on an exchange-by-exchange basis—and thereby permitting exchanges under common ownership to collectively vote the interests of their corporate parent and to therefore command a majority of votes on the operating committees—does not facilitate representation of the interests of all stakeholders and no longer supports the integrity and affordability of SIP data.[151]

Finally, to ensure that only those SROs that are contributing to the generation or collection of the core data disseminated by the New Consolidated Data Plan have a vote on New Consolidated Data Plan decisions, the Commission believes that the New Consolidated Data Plan should provide that if an exchange ceases operation as an equity trading venue, or has yet to commence operation as an equity trading venue, that exchange should not have a vote on Plan matters.[152]

[142] *See, e.g.,* EMSAC Transcript, *supra* note 121, at 0106:25–0107:1 (statement of Richard Ketchum, Former CEO of FINRA).

[143] *See* Cboe U.S. Equities Volume Data, *available at https://markets.cboe.com/us/equities/market_share/* (last accessed Dec. 4, 2019). The consolidated market share of these three exchange groups has remained roughly comparable over the past three years, remaining above 15% and below 25%. As of August 16, 2016, the NYSE exchange group had approximately 23% consolidated market share, the Nasdaq exchange group had approximately 16%, and the Cboe exchange group had approximately 21%. As of August 15, 2017, the NYSE exchange group had approximately 23% consolidated market share, the Nasdaq exchange group had approximately 18%, and the Cboe exchange group had approximately 20%. As of August 16, 2018, the NYSE exchange group had approximately 23% consolidated market share, the Nasdaq exchange group had approximately 19%, and the Cboe exchange group had approximately 18%. *See* Cboe U.S. Equities Volume Data, *available at https://markets.cboe.com/us/equities/market_share/* (last accessed Aug. 16, 2019).

[144] *Id.*

[145] The Commission notes, however, that while the voting allocation contemplated herein would not give a second vote to FINRA, it would effectively increase FINRA's voting power in that FINRA's vote on all matters would constitute approximately 11.1% of the SRO vote, and 7.4% of all votes on the operating committee, rather than its current 5.9% of all votes on the operating committees of the Equity Data Plans.

[146] *See supra* note 143.

[147] The Commission notes that it adopted a similar look-back period in the adoption of Regulation ATS for determining whether an alternative trading system ("ATS") has reached trading volume thresholds that trigger certain requirements. *See* Rule 301 of Regulation ATS, 17 CFR 242.301(b)(3), (providing that, "[a]n alternative trading system shall comply with the requirements set forth in paragraph (b)(3)(ii) of this section, with respect to any NMS stock in which the alternative trading system . . . [d]uring at least 4 of the preceding 6 calendar months, had an average daily trading volume of 5 percent or more of the aggregate average daily share volume for such NMS stock as reported by an effective transaction reporting plan."). *See also* Securities Exchange Act Release No. 40760 (Dec. 8, 1998), 63 FR 70844 (Dec. 22, 1998) (Regulation of Exchanges and Alternative Trading Systems).

[148] Nasdaq Letter, *supra* note 137. *See also supra* note 138 and accompanying text.

[149] *See, e.g.,* Securities Exchange Act Release No. 73639 (Nov. 19, 2014), 79 FR 72251, 72271–72 (Dec. 5, 2014) (Regulation Systems Compliance and Integrity adopting release) (designating the SIPs as "critical SCI systems" because "consolidated market data is central to the functioning of the securities markets.").

[150] 15 U.S.C. 78f.

[151] *See supra* notes 130–141 and accompanying text. The Commission notes that the one–vote-per-exchange voting model precedes the demutualization of the exchanges and the emergence of exchange groups. *See, e.g.,* Order temporarily approving CQ Plan, *supra* note 31, 43 FR at 34852.

[152] Both ISE and Cboe have been inactive as equities exchanges for several years but continue to retain full voting rights on the Equity Data Plans. ISE ceased trading equities on December 23, 2008. *See* Securities Exchange Act Release No. 80873 (June 4, 2017), 82 FR 27094 (June 13, 2017). Cboe stopped trading equities on April 30, 2014. *See* Securities Exchange Act Release No. 71880 (Apr. 4, 2014), 79 FR 19950 (Apr. 10, 2014).

2. Non-SRO Participation

In 2005, when the Commission adopted Regulation NMS,[153] it amended the Equity Data Plans to establish non-voting advisory committees to give interested parties an opportunity to express their views on Equity Data Plan business before any decision by the operating committees.[154] Those advisory committees are made up of at least one representative from each of the following categories: (1) A broker-dealer with a substantial retail investor customer base, (2) a broker-dealer with a substantial institutional investor customer base, (3) an ATS, (4) a data vendor, and (5) an investor. As the Commission explained, the creation of the advisory committees was ''a useful first step toward improving the responsiveness of Plan participants and the efficiency of Plan operations.'' And the Commission said that it would ''continue to monitor and evaluate Plan developments to determine whether any further action is warranted.'' [155] After monitoring the activities of the Equity Data Plans over many years, the Commission believes that non-SROs are important stakeholders in the operation of the Equity Data Plans. The Commission now believes that the governance structure of the New Consolidated Data Plan should provide for non-SROs to participate as full members of the operating committee, rather than in an advisory capacity.

Under the current governance structure of the Equity Data Plans, the SROs retain substantial influence over the advisory committees. Members of the advisory committees are selected by the majority vote of the SROs,[156] and each SRO has the right to select an additional member of the advisory committee.[157] Members of the Equity Data Plans' advisory committees are currently permitted to attend Plan meetings, receive certain information distributed to the operating committee relating to Plan matters, and submit their views prior to Plan decisions.[158] Members of the Equity Data Plan advisory committees, however, may not vote on Equity Data Plan matters; can be excluded from substantive discussions, including, for example, discussions about potential amendments to the Equity Data Plans (*e.g.,* discussions in ''executive sessions''); and can be denied access to critical information, such as cost and detailed revenue information.[159] Thus, under the Equity Data Plans' current governance structure, the operating committees, which make decisions regarding Equity Data Plans' actions, such as expenditures for technology upgrades and programming updates (including those to address latency issues), changes to fees, and amendments, are controlled exclusively by SRO representatives, and no other market constituency has voting rights.

Although advisory committee representatives currently have no voting power in the Equity Data Plans and have limited access to non-public information on Equity Data Plan matters,[160] they have substantial interests at stake in the Equity Data Plans' decision-making process. Market participants who use SIP data—including investors, broker-dealers, data vendors, and others—are required to pay the fees charged by the Equity Data Plans. Retail investors that access core data through their broker-dealers can also be affected by data fees in that the fees charged to their broker-dealers can impact investors' ready access through their broker-dealers to full NBBO market information.[161] The Commission has previously stated that investors must have core data to participate in the U.S. equity markets.[162] And many market participants, including all broker-dealers, must have access to SIP data to meet their regulatory obligations.[163]

Roundtable panelists also stated that there are substantial burdens associated with the Equity Data Plans' audits of their firms' subscriber data usage and fee payment.[164] A retail broker-dealer,

[153] *See* Regulation NMS Release, *supra* note 6.

[154] *See* Regulation NMS Release, *supra* note 6, 70 FR at 37561 (''Expanding the participation of interested parties other than SROs in Plan governance should increase the transparency of Plan business, as well as provide an established mechanism for alternative views to be heard by the Plans and the Commission. Earlier and more broadly based participation could contribute to the ability of the Plans to achieve consensus on disputed issues . . . . The Commission particularly believes that the Plans should give full consideration to the views of industry participants on steps that would streamline the administrative procedures and burdens of the three Plans. Enhanced participation of advisory committee members in Plan affairs should help further this process.'').

[155] *See* Regulation NMS Release, *supra* note 6, 70 FR at 37561.

[156] *See, e.g.,* Day Two Transcript, *supra* note 113, at 91:13–19, 136:17–19, 137:8–12 (statements of Hubert de Jesus, Blackrock) (stating that advisors should be selected in an independent fashion to avoid Participants potentially choosing not to renew an advisor, or removing an advisor who does not support SRO interests).

[157] *See* Regulation NMS Release, *supra* note 6, 70 FR at 37610 (Text of amendments to the Equity Data Plans, Governance Amendment (b)(2)).

[158] *See, e.g.,* Section III(e)(iii) of the CTA Plan, *supra* note 31 (''Members of the Advisory Committee shall have the right to submit their views to CTA on Plan matters, prior to a decision by CTA on such matters. Such matters shall include, but not be limited to, any new or modified product, fee, contract, or pilot program that is offered or used pursuant to the Plan.''); Section III(e)(iv) of the CTA Plan (''Members of the Advisory Committee shall have the right to attend all meetings of CTA and to receive any information concerning Plan matters that is distributed to CTA; provided, however, that CTA may meet in executive session if, by affirmative vote of a majority of the Participants entitled to vote, CTA determines that an item of Plan business requires confidential treatment.'').

[159] *See id.*

[160] Advisory Committee members may have access to non-public drafts of amendments to the Equity Data Plans and public statements; however, they do not have access to plan cost and detailed revenue information. *See* Patomak Petition, *supra* note 48, at 4–5 (''Currently, however, exchanges' disclosures related to their equity market data fees and expenses are inadequate, making it difficult for market participants to make informed comments and the Commission to make reasoned findings. Although exchanges recently have begun to modestly enhance their disclosures related to market data fees, they remain inadequate.''). The Commission notes that the CTA/CQ Plans and the Nasdaq/UTP Plan currently publicly disclose, on a quarterly basis (with a 60-day lag), the percentage of revenue earned by fee type. *See, e.g.,* Q4 2018 CTA Quarterly Revenue Disclosure, *available at https://www.ctaplan.com/publicdocs/ctaplan/notifications/trader-update/Q4%202018%20CTA%20Quarterly%20Revenue%20Disclosure.pdf;* Q4 2018 UTP Quarterly Revenue Disclosure, *available at http://www.utpplan.com/DOC/UTP_Revenue_Disclosure_Q42018.pdf.* The fee types currently identified in the public disclosures are: Professional subscribers, non-professional subscribers, non-display, quote query, and ''other.'' Although the current disclosures break down the revenue earned for certain fee types, the current disclosures are not broken down by each line item in the Equity Data Plans' fee schedule. For example, both the CTA/CQ Plans and the Nasdaq/UTP Plan group certain fee types under the general ''other'' category. The ''other'' category for the CTA/CQ Plans includes data feed access fees, redistribution fees, and TV ticker fees. The ''other'' category for the Nasdaq/UTP Plan includes data feed access fees, annual administrative fees, redistributor fees, voice port fees, and cable TV ticker fees. As another example, the CTA/CQ Plans and the Nasdaq/UTP Plan have more than one type of non-display fees and access fees, which are not separately identified in the current revenue disclosures. In addition, the current disclosures by the CTA/CQ Plans and Nasdaq/UTP Plan do not include the revenue recovered from audits or any other methods of recovery.

[161] Some broker-dealers provide customers with market information from exchange proprietary TOB data feeds as substitutes for core data in certain applications. This proprietary TOB data may be cheaper than core data, but may contain information from only one exchange or one exchange group. *See* Effective-Upon-Filing Release, *supra* note 27, 84 FR at 54798 n.39.

[162] *See* Bloomberg Order, *supra* note 23, at 4.

[163] *See* Effective-Upon-Filing Release, *supra* note 27, 84 FR at 54798.

[164] *See, e.g.,* Day One Transcript, *supra* note 38, at 112:21–24 and 114:2–9 (statements of Matt Billings, TD Ameritrade) (''The plans regularly audit brokers for compliance with their overly complex rules, which are not harmonized across the CTA and UTP Plans, and are a cause for misinterpretation. . . . The question ultimately becomes, at what point does a retail broker move away from the NMS plans . . . to avoid . . . the audit risk liability that currently exists under the plans.''); Day Two Transcript, *supra* note 113, at 196:20–197:7 (statement of Marcy Pike, Fidelity Investments) (''Most large brokerage firms or asset managers that are consuming this data have significant staffs that are counting and reporting the

Continued

for example, has stated that compliance with the requirement to differentiate between the professional and non-professional status of their customers can be costly for a retail broker in terms of both time and manpower needed to complete the audit, and that these burdens are a factor favoring broker-dealer use of the exchanges' proprietary TOB products.[165] Exchanges have also acknowledged the administrative burden associated with determining the professional and non-professional status of broker-dealers' customers.[166]

During the Roundtable, many panelists expressed support for expanding the role of advisory committees in the governance of Equity Data Plans and for providing the advisory committees with the right to a formal vote on the operating committees.[167] One panelist stated that current members of the advisory committees could initially serve as the pool of candidates from which to draw non-SRO representatives with voting power and that once the non-SRO representatives are appropriately constituted, they may be able to select among themselves their successors.[168] Exchange panelists were not unified in their views during the Roundtable, however. One exchange panelist expressed support for full voting representation by brokers, traders, and investors on the operating committees of the Equity Data Plans.[169] Several exchange panelists suggested a willingness to add an additional non-SRO vote, but only after consideration of the obligations attached to the voting right.[170] Another exchange, NYSE, argued in its comment letter that, before providing advisory committee members with a vote, the Commission would need to take into consideration their conflicts of interest and to place obligations on the advisory committee members similar to those placed on the exchanges.[171]

Many Roundtable commenters expressed support for permitting the Equity Data Plans' advisory committee members to have votes.[172] In particular, one commenter suggested that the governance structure should call for a board and operating committees with equal non-SRO voting membership, including user, vendor, and public investor participation.[173] One commenter asserted that giving voting representation on the operating committee to broker-dealers and asset managers would mitigate potential conflicts of interest.[174] One commenter supported equal voting power between the SROs and industry representatives on the Equity Data Plans and replacing those representatives every two to four years.[175] Another commenter stated that meaningful governance of the Equity Data Plans cannot be accomplished unless user and vendor representatives have a voice in their operations.[176]

In one of its comment letters on the Roundtable, Nasdaq recommended expanding the authority and responsibilities of the advisory committees, particularly on fees and policy-related matters, and supported providing the general investing public a voice on the advisory committees.[177] Nasdaq further stated that increased authority for the advisory committees should be coupled with ''a fair and transparent mechanism'' to address conflicts of interest among advisory committee members.[178] In addition,

usage of this data . . . . There is a whole group of folks that have entered into the industry to help facilitate audits for the exchanges . . . .'').

[165] *See* TD Ameritrade Letter, *supra* note 40, at 5–8 (stating that the lower cost of proprietary TOB products, coupled with costs associated with the process to differentiate between retail professionals and non-professionals imposed by the Equity Data Plans, and associated audit risk, favors retail broker-dealer use of proprietary TOB products). *See also* Fidelity Letter, *supra* note 114, at 9 (''Exchanges spend considerable resources auditing broker-dealers to ensure that subscriber status categories are correctly applied. Why? Because it is in their commercial interest to do so—Professional subscriber market data rates are significantly higher than Non-professional subscriber rates. We question whether exchange resources used to audit member firms might be better deployed to reduce SIP costs.''). Under their respective policies, the Equity Data Plans deem data recipients to be professionals unless demonstrated to be a non-professional (a non-professional being a natural person who receives market data solely for his/her personal, non-business use, and who further does not fall into certain other categories). *See, e.g.,* CTA Plan Nonprofessional Subscriber Policy, *available at https://www.ctaplan.com/publicdocs/ctaplan/notifications/trader-update/Policy%20-%20Non-Professional%20Subscribers%20-%20CTA.pdf* (last accessed Nov. 9, 2019); UTP Plan, Exhibit 2 (Fees for UTP Services), Section (b)(2), *available at http://www.utpplan.com/DOC/Nasdaq-UTPPlan_after_43rd_Amendment-Excluding_21st_36th_38th_42nd_Amendments.pdf* (last accessed Nov. 9, 2019).

[166] *See, e.g.,* NYSE Insights, *supra* note 92 (''Subscribers pay different rates for the product based on whether the individual viewing the data is deemed a 'professional' or 'non-professional' user. This is a policy that has provided steep discounts for Main Street investors, but has created complex administrative burdens for brokers.''); Nasdaq Total Markets Paper, *supra* note 45, at 4 (stating that the distinctions between ''professional'' and ''non-professional'' users ''have become arbitrary and more complex than is necessary and create undue administrative burden to manage. We should modernize the user definitions to achieve the same general goals while streamlining the administrative burden.''). *See also* Day Two Transcript, *supra* note 113, at 258:19–25 (statement of Kevin Carrai, Cboe) (highlighting a compliance tool developed by the CTA Plan to determine whether an individual should be charged professional or non-professional rates for the receipt and use of the plan's market data).

[167] *See, e.g.,* Day Two Transcript, *supra* note 113, at 91:13–19, 136:17–19, 137:8–12 (statements of Hubert de Jesus, Blackrock) (advocating for advisory committee members to have equitable voting representation—a 50:50 balanced voting representation—and that advisors should be selected in an independent fashion to avoid Participants potentially choosing not to renew an advisor, or removing an advisor who does not support SRO interests); at 87:17–20, 118:14–20, 133:2–14 (statements of Richard Ketchum, Former CEO of FINRA) (supported advisory committee votes, but stressed that having a fiduciary responsibility tied to enforceable accountability for both Participants and advisors is important and could benefit from Commission action); at 122:17–20, 129:16–19 (statements of Michael Masone, Citigroup) (recommended a minimum of two additional advisory committee votes—specifically an asset manager and a broker-dealer—to be represented on the NMS plans); at 127:23–128:6 (statement of John Ramsay, IEX).

[168] *See, e.g.,* Day Two Transcript, *supra* note 113, at 128:7–16 (statement of John Ramsay, IEX).

[169] *See, e.g.,* Day Two Transcript, *supra* note 113, at 128:17–23 (statement of John Ramsay, IEX).

[170] *See, e.g.,* Day Two Transcript, *supra* note 113, at 134:21–135:8 (statement of Emily Kasparov, Chicago Stock Exchange, Inc. (n/k/a NYSE Chicago)); at 136:4–16 (statement of Bryan Harkins, Cboe); at 251:16–25 (statement of Jeff Davis, Nasdaq).

[171] *See* NYSE Group Letter, *supra* note 116, at 19 (stating that ''absent the same regulatory obligations as the exchanges, Advisory Committee members would not have an incentive to cast votes consistent with the terms of the [Equity Data Plans]''). *See also* NYSE Letter, *supra* note 137, at 9 (stating that ''broker-dealers and other industry participants are free to and do act entirely in their own commercial interests unfettered by statutory or public interest concerns'').

[172] *See, e.g.,* SIFMA Letter III, *supra* note 57, at 7 (''SIP governance (and that of all other NMS Plans) should include voting representation by both broker-dealers and asset managers.''); SIFMA Letter IV, *supra* note 113, at 4 (stating that the SIP operating committees should provide equal voting rights to industry representatives from: (1) Institutional broker-dealers; (2) retail broker-dealers; (3) buy-side firms; (4) data vendors; (5) ATSs; and (6) an individual with significant and reputable regulatory expertise); Fidelity Letter, *supra* note 114, at 3 (recommending that the Commission improve SIP governance by providing broker-dealers and asset managers a vote on all matters before the operating committees to provide alternative views, and to promote initiatives to better develop core data).

[173] *See* CTA/UTP Letter, *supra* note 113, at 2.

[174] *See* SIFMA Letter III, *supra* note 57, at 7.

[175] *See* SIFMA Letter IV, *supra* note 113, at 4–5.

[176] *See* TD Ameritrade Letter, *supra* note 40, at 9 (''TD Ameritrade also believes that meaningful governance of the Equity Data Plans cannot be accomplished unless user and vendor representatives have a true voice in their operation. The governance structure should allow for fair and equitable voting rights for exchanges and for members of the CTA/UTP Advisory Committee.''). Similarly, another commenter supported equitable voting representation from investment advisers, broker-dealers, and data vendors. *See* Healthy Markets Letter, *supra* note 113, at 40.

[177] *See* Letter from Thomas Wittman, Executive Vice President, Head of Global Trading and Market Services, and CEO, Nasdaq (Oct. 25, 2018), at 12, *available at https://www.sec.gov/comments/4-729/4729-4562784-176135.pdf* (''Nasdaq 2018 Letter'').

[178] *Id. See also* Nasdaq Letter, *supra* note 137, at 7 (stating that, ''other than ensuring their own compliance with the securities laws and rules of

Nasdaq has expressed support for establishing a partnership between the exchanges and industry participants for Equity Data Plans' governance, specifically suggesting that industry participants have two votes on the plans' operating committees, to be split among the six members of the Equity Data Plans' advisory committee members.[179] Nasdaq further supported requiring non-SRO voting members to ''adhere to existing conflicts of interest and confidentiality policies, such as those that require exchanges and their affiliates to recuse themselves when they might receive a unique benefit not shared with other exchanges.'' [180]

The Commission also received petitions for rulemaking that requested that the Commission improve the Equity Data Plans' governance by including voting representation from investment advisers and broker-dealers,[181] and that the Commission conduct a review of the equity market data fee structure [182] and study the governance of the U.S. equity market data regulatory framework with respect to proprietary market data and the consolidated data processor model.[183] The EMSAC also recommended that the advisory committee have the right to a formal vote to express its views before consideration of any matter on which the operating committee votes.[184]

NYSE and Nasdaq, however, expressed concern with enhancing advisory committee involvement in Equity Data Plan governance.[185] NYSE argued in its comment letter that the current non-voting advisory committee structure is ''working as intended'' and that Section 11A of the Act and Rule 608 of Regulation NMS enable only SROs to become official voting members or participants of the Equity Data Plans, consistent with the SROs' regulatory obligations.[186] In particular, NYSE stated that, ''[i]f the advisors of the NMS Plans were allowed effectively to interfere with the actions of the operating committees of the Plans, the advisors might be able to block or slow down changes the SROs felt were necessary to discharge their statutory obligations.'' [187] Nasdaq similarly asserted that non-SROs have a ''strong voice in the operation of NMS Plans through the significant participation of advisory committees'' and expressed concern that enhanced industry participation in the Equity Data Plans could frustrate the regulatory obligations that attach to the SROs as Participants.[188] Nasdaq also stated that expanding the role of advisory committees to include voting rights ''would need to be accomplished through an amendment to Rule 608 of Regulation NMS and to the NMS plans to ensure proper and consistent application.'' [189]

Since the Commission took the step of establishing non-voting advisory committees in Regulation NMS, the equity markets have seen a number of important changes, which as discussed above include the demutualization of exchanges—and the resulting divergence of the interests of the exchanges and their members—and the conflicts of interests that have emerged as exchanges have developed a variety of proprietary data products and marketed them to the subscribers of core data disseminated by the SIPs. Moreover, while non-SROs bear significant burdens from subscriber audits, those market participants have no role in selecting or overseeing the plan administrator that is responsible for the audit process. Thus, in light of the critical importance of disseminating SIP data to a broad range of market participants, the important role that the Equity Data Plans play in the national market system, and the financial [190] and operational burdens [191] that the Equity Data Plans' decisions frequently place on non-SRO market participants—as well as the comments the Commission has received supporting voting rights for non-SROs on the Equity Data Plans' operating committees.[192] The Commission believes that, to help ensure that the New Consolidated Data Plan addresses the needs of all market participants, broader participation in the governance of the New Consolidated Data Plan would be beneficial.[193] Consequently, the Commission believes that the New Consolidated Data Plan should include provisions that permit non-SRO representatives reflecting a diverse range of affected market participants to participate as voting members of the New Consolidated Data Plan operating committee.[194]

Broader participation in the governance of the New Consolidated Data Plan should be beneficial in providing more meaningful inclusion of key stakeholders' views in New Consolidated Data Plan decision making, and the Commission believes that the New Consolidated Data Plan should provide for separate voting member representatives of an institutional investor (*e.g.,* an asset management firm), a broker-dealer with a predominantly retail investor customer base, a broker-dealer with a predominantly institutional investor customer base, a securities market data vendor, an issuer of NMS stock, and a retail investor. The representatives on the New Consolidated Data Plan would, therefore, closely mirror the categories of representatives on the advisory committees of the Equity Data Plans. However, because the Commission believes that ATSs and institutional broker-dealers serve similar roles in the markets, as they both operate as over-

SROs, broker-dealers must be expected to act in their own commercial interests.'').

[179] *See* Nasdaq Total Markets Paper, *supra* note 45, at 22–23.

[180] *See id.* at 23.

[181] *See* Healthy Markets Petition, *supra* note 48, at 6.

[182] *See* Patomak Petition, *supra* note 48, at 8–9 (''Based on this review, the SEC should consider whether any additional regulatory changes related to market data are warranted, potentially including . . . reforming NMS plan governance to allow voting representation from stakeholders such as broker-dealers and buy-side representatives.'').

[183] *See* MFA Petition, *supra* 48, at 13.

[184] *See* EMSAC Governance Recommendations, *supra* note 136, at 2. The EMSAC also recommended that, if the operating committee approves any action that was opposed by a majority of the advisory committee, the operating committee should explain and document its reasons for proceeding contrary to advisory committee input and that, in the event that the matter is the subject of a rule filing, the operating committee should also summarize and explain the results of the operating committee and advisory committee votes in the filing submitted to the Commission. *See id.*

[185] *See supra* note 137 and accompanying text.

[186] NYSE Letter, *supra* note 137, at 9.

[187] *Id.* at 9.

[188] Nasdaq Letter, *supra* note 137, at 7.

[189] *Id.* at 22.

[190] The total revenues derived from Equity Data Plans' fees are substantial. For example, total revenue for the three Equity Data Plans totaled more than $430 million in 2017, based on their audited financial statements. Moreover, while non-SROs bear significant burdens from subscriber audits, *see supra* notes 164–165 and accompanying text, those market participants have no role in selecting or overseeing the plan administrator that is responsible for the audit process.

[191] Any changes in the data feeds, connectivity options, and policies and procedures of the Equity Data Plans often require responsive technology changes by each subscriber.

[192] *See supra* notes 172–176 and accompanying text.

[193] *See supra* note 159 and accompanying text.

[194] The Commission understands that previous efforts to amend the Equity Data Plans to provide votes on the operating committees to non-SROs have not been successful due, in part, to the significant hurdle of satisfying the plans' unanimity requirements before an amendment to any of the plans may be proposed. *See* Letter from Eric Swanson, General Counsel, Bats Global Markets, Inc. (Aug. 17, 2016), *available at https://www.sec.gov/comments/265-29/26529-83.pdf* (''In early 2015, Bats submitted proposals to the UTP and CTA/CQ Plans' Operating Committees to allow one broker-dealer and one investment advisor representative as full voting members. These proposals were not designed to be a final recommendation; but to rather act as a strawman to facilitate further discussions on how to increase participation by industry participants in the governance of the UTP and CTA/CQ Plans. Bats was unable to obtain sufficient support from the Operating Committee to move that initiative forward . . . .'').

the-counter trading venues, the Commission believes that the New Consolidated Data Plan operating committee should not include a designated ATS representative.[195] To further ensure that non-SRO members reflect a diversity of perspectives, the Commission believes that the New Consolidated Data Plan should not permit a person affiliated with an SRO or a broker-dealer to serve as the representative of an ''issuer,'' a ''retail investor,'' or a ''market data vendor.''

The Commission also believes that the extent of the SROs' current involvement in the Equity Data Plans' advisory committees—from selection of the members to selection of their own representatives on the advisory committees—limits the ability of the advisory committee members to be fully independent and to provide alternative views to be heard by the Equity Data Plans and the Commission, as contemplated when the advisory committees were created.[196] Therefore, the Commission believes that the SROs should not be permitted to select the non-SRO members of the New Consolidated Data Plan operating committee. The Commission believes that the operating committee should provide for a process to publicly solicit, and make available for public comment, nominations for non-SRO members.

Further, the Commission believes that the initial non-SRO operating committee members should be selected by the current members of the Equity Data Plans' advisory committees, excluding advisory committee members who were selected by a Participant to be its representative, and subsequent non-SRO members should be selected solely by the then-serving non-SRO members of the New Consolidated Data Plan operating committee.[197] Additionally, the Commission believes that, to enhance the ability of non-SRO members to obtain sufficient experience with the operation of the New Consolidated Data Plan, and to make informed contributions as members of the operating committee, the New Consolidated Data Plan should provide that non-SRO members serve for a term of two years, which is the current term of advisory committee members of the Equity Data Plans.[198] The Commission further believes that to ensure that a diversity of viewpoints are reflected among the non-SRO members of the operating committee, the New Consolidated Data Plan should provide for reasonable term limits for non-SRO members.[199]

The Commission further believes that the current membership of the Equity Data Plans' advisory committees, excluding exchange representatives, should, to the extent possible, be maintained through the transition to the New Consolidated Data Plan to facilitate continuity. The Commission believes that the current advisory committee members' experience with, and expertise in, the operation of the Equity Data Plans will be valuable in selecting the initial non-SRO operating members (as discussed in more detail below) and will thus support the stable transition of operations from the Equity Data Plans to the New Consolidated Data Plan. Therefore, until the initial non-SRO members have been selected, the Commission believes that the Participants should renew the expiring terms of all members of the Equity Data Plans' advisory committees (other than those selected to represent a Participant) who remain willing to serve in that role.

As noted above, certain exchanges have expressed concerns regarding extending voting rights on the Equity Data Plans to non-SROs.[200] The Commission recognizes that the SROs have special legal obligations and responsibilities under the Act, including with regard to operating the Equity Data Plans.[201] However, neither the Act nor the applicable rules thereunder, including Rule 608 of Regulation NMS, prohibit non-SROs from participating in the governance of any NMS plan or from having voting rights in the administration of NMS plans. Therefore, the Commission believes that it is not necessary to amend Rule 608 of Regulation NMS in order for the New Consolidated Data Plan to include voting rights for non-SROs. The Commission believes that providing non-SROs with voting rights in the New Consolidated Data Plan should help to further ensure that SIP data is available for the benefit of the public interest, by incorporating input from a range of stakeholders, consistent with the findings and goals of Section 11A of the Act.[202] Moreover, the Commission believes that votes can be provided to non-SROs in a manner that results in the SROs retaining the voting power necessary to act jointly on behalf of the plan pursuant to the requirements of Section 11A of the Act[203] and Rule 608 of Regulation NMS.[204]

Specifically, the Commission believes that the New Consolidated Data Plan should provide the SROs in aggregate with two-thirds of the voting power on the operating committee—and non-SRO members of the operating committee in aggregate with one-third of the voting power—with proportionate fractional votes allocated to non-SRO members of the operating committee as necessary to preserve this ratio. To ensure that the SROs retain primary control of the New Consolidated Data Plan, the Commission believes that this ratio should be maintained at all times, including when a member of the operating committee is not present or unable to vote for any reason. In addition, the relative value of non-SRO votes should be adjusted as necessary to account for new exchange registrations and consolidations to continually ensure that the ratio between aggregate SRO voting power and aggregate non-SRO voting power remains the same.

Thus, under the provisions that the Commission believes should be part of the New Consolidated Data Plan regarding the allocation of votes among the SROs and non-SROs, as applied to the current number and ownership structure of the SROs, there would be nine aggregate SRO votes[205] (two-thirds) and four and one-half aggregate non-SRO votes (one-third) on the New Consolidated Data Plan operating committee. Because there would be six non-SRO operating committee members eligible to vote in the New Consolidated Data Plan, but only four and one-half non-SRO votes in the aggregate, each

[195] As noted above, the advisory committees of the Equity Data Plans currently have representatives from the following categories: (1) A broker-dealer with a substantial retail investor customer base; (2) a broker-dealer with a substantial institutional investor customer base; (3) an ATS; (4) a data vendor; and (5) an investor. The Commission notes that the individual representing an ATS on the Equity Data Plans advisory committee has, for several years, been from a large institutional broker.

[196] *See* Regulation NMS Release, *supra* note 6, 70 FR at 37561 (''Expanding the participation of interested parties other than SROs in Plan governance should increase the transparency of Plan business, as well as provide an established mechanism for alternative views to be heard by the Plans and the Commission.'').

[197] A list of current members of the CTA Plan advisory committee is available at *https://www.ctaplan.com/advisory-committee* (last accessed on Nov. 13, 2019). The Equity Data Plans all share the same advisory committee members. *See also supra* notes 156 and 168.

[198] Section III.(e)(2) of the CTA Plan; Section IV.E.(b) of the UTP Plan.

[199] For example, one commenter recommended that non-SRO members should nominate individuals to replace then-serving non-SRO members every two to four years. *See supra* note 175.

[200] *See supra* notes 170–171, 185–189 and accompanying text.

[201] 15 U.S.C. 78k–1(a)(3)(B).

[202] 15 U.S.C. 78k–1(a)(1).

[203] 15 U.S.C. 78k–1

[204] 17 CFR 242.608.

[205] The NYSE exchange group would have two votes; the Nasdaq exchange group would have two votes; the Cboe exchange group would have two votes; and IEX, FINRA, and LTSE would each have one vote—totaling nine votes.

non-SRO member's vote would be worth three-quarters of one vote (4.5 ÷ 6 = ¾).

Further, the Commission believes that action by the operating committee of the New Consolidated Data Plan should require an ''augmented majority vote,'' meaning a two-thirds majority of all votes on the operating committee, provided that this vote also includes a majority of the SRO votes, which will ensure that the SROs have sufficient voting power to act jointly on behalf of the plan pursuant to the requirements of Section 11A of the Act [206] and Rule 608 of Regulation NMS.[207] For example, under the current number and ownership structure of the SROs, there would be nine SRO votes and four and one-half non-SROs votes. For an ''augmented majority vote,'' nine votes of the operating committee would be required for a two-thirds majority, and five SRO votes would be required for an SRO majority vote. Five SRO votes would be necessary to obtain a majority of SRO votes as well as a two-thirds majority vote of the operating committee. There would not be a situation in which a two-thirds majority would not also include a majority of the SRO votes. However, the number of the SROs may not remain static. If in the future another SRO joined the New Consolidated Data Plan, there would then be ten SRO votes, and the non-SRO operating committee members would then have five votes. Under those circumstances, a two-thirds majority could be obtained without a majority of the SRO votes—in other words, if five SROs and five non-SROs vote in favor of a motion, and five SROs vote against the motion, two-thirds of the operating committee voted in favor, but a majority of SROs did not. Therefore, this would not constitute an augmented majority vote and the motion would fail.

Finally, the Commission believes that the New Consolidated Data Plan should include provisions to address circumstances in which a member is unable to attend an operating committee meeting or to cast a vote.

3. Voting Requirements for Changes to the New Consolidated Data Plan

Under the current governance model, certain actions by the Equity Data Plans' operating committees require the unanimous vote of all Participants.[208] While the majority of actions under the Equity Data Plans require only a majority vote, unanimity is required, for example, to propose amendments to the provisions of the Plans,[209] to amend contracts between the Equity Data Plans' processor and vendors,[210] and to terminate a Plan processor.[211] The EMSAC, however, recommended that unanimity not be required for NMS plan votes, stating that limiting the use of unanimity requirements would ''prevent undue friction or delay in Plan voting matters.'' [212]

The Commission believes that, because unanimous voting provides each exchange, despite the conflicts of interest it may face, with an effective veto over certain significant Equity Data Plans' matters, the requirement for unanimous voting can enable a single exchange to obstruct improvements to the collection (*e.g.,* connectivity), processing (*e.g.,* aggregation or consolidation), and distribution (*e.g.,* transmission) of SIP data that the other SROs support. To address the concerns that arise from the Equity Data Plans' requirement for unanimous voting, the Commission believes that the submission of amendments to the New Consolidated Data Plan to the Commission, like other actions by the operating committee as described above,[213] should be approved by an augmented majority vote, defined above, rather than a unanimous vote. As noted above, the Commission believes that requiring an augmented majority vote for changes to the New Consolidated Data Plan would provide non-SRO members with a voice in New Consolidated Data Plan governance, while also ensuring that the SROs have sufficient voting power to act jointly on behalf of the New Consolidated Data Plan.

One Roundtable panelist and one commenter raised the concern that eliminating the current Equity Data Plans' requirements regarding unanimous voting would reduce the influence of FINRA and the unaffiliated exchanges.[214] The Commission, however, believes that the voting allocation described above for the New Consolidated Data Plan—coupled with the existing requirement that NMS plan amendments (except those put into effect upon filing) [215] must be published for comment and subject to approval by the Commission to become effective—should help to address this concern.[216] Actions by the Equity Data Plans would no longer be subject to veto by a single SRO or exchange group, and substantive New Consolidated Data Plan amendments would continue to be subject to review by the Commission and public notice and comment, and would not become effective unless the Commission finds them to be consistent with the Act.

In addition, unanimous voting is not a requirement for NMS plans. In fact, the most-recently approved NMS plan, which governs the facility for a consolidated audit trail (''CAT''), requires the affirmative vote of a two-thirds supermajority of all members of the operating committee for plan amendments.[217] In the adopting release for Rule 613 under the Act,[218] which required the creation of the CAT Plan, the Commission stated that ''an alternate approach'' to voting involving ''the possibility of a governance requirement other than unanimity, or even super-majority approval, for all but the most important decisions'' should be considered, as it ''may be appropriate to avoid a situation where a significant majority of plan sponsors—or even all but one plan sponsor—supports an initiative but, due to a unanimous voting requirement, action cannot be undertaken.'' [219]

The Commission believes that the proposed reallocation of voting rights among the SROs—combined with the provision of formal voting power to non-SROs, the provision of a two-thirds majority of votes allocated to the SROs, and the provision of an augmented majority vote rather than unanimous vote for amendments to the New Consolidated Data Plan—would further the objectives of Section 11A of the

[206] 15 U.S.C. 78k–1.

[207] 17 CFR 242.608.

[208] *See* Section IV.(b) of the CTA Plan; Section IV.(c) of the CQ Plan; Section IV.C.1 of the UTP Plan.

[209] *See* Section IV.(b)(i) of the CTA Plan; Section IV.(c)(i) of the CQ Plan; Sections IV.C.1.a. and XVI of the UTP Plan.

[210] *See, e.g.,* Section IV.C.1(b) of the UTP Plan.

[211] *See, e.g.,* Section IV.C.1(c) of the UTP Plan.

[212] *See* EMSAC Governance Recommendations, *supra* note 136.

[213] *See supra* Section II.C.2.

[214] *See, e.g.,* Day Two Transcript, *supra* note 113, at 113:24–114:9, 149:1–13, 24 (statements of Emily Kasparov, Chicago Stock Exchange, Inc. (n/k/a NYSE Chicago)); Healthy Markets Letter, *supra* note 113, at 10 (''In recent years, the CTA Plan has modified its procedures to permit votes by less than unanimity. This severely limits the ability of FINRA or an independent exchange to block CTA Plan actions, arguably granting much greater power to the dominant exchange operators.'').

[215] *See* 17 CFR 242.608(b)(3).

[216] *See also supra* note 145 (noting FINRA's proportional voting power would increase under the provisions of the New Consolidated Data Plan as contemplated by this Order).

[217] *See* Limited Liability Company Agreement of CAT NMS, LLC (effective Jan. 10, 2018), *available at https://www.catnmsplan.com/wp-content/uploads/2018/01/CAT-NMS-Plan-Current-as-of-1.10.18.pdf*; Securities Exchange Act Release No. 79318 (Nov. 15, 2016), 81 FR 84696 (Nov. 23, 2016) (Order Approving the National Market System Plan Governing the CAT or ''CAT Plan''). *See also* Section 12.3 of the CAT Plan.

[218] 17 CFR 242.613.

[219] *See* Securities Exchange Act Release No. 67457 (July 18, 2012), 77 FR 45722, 45787 (Aug. 1, 2012).

Act.[220] Together, these provisions would promote the prompt, accurate, reliable, and fair dissemination of core data [221] by providing for meaningful input from a broad range of stakeholders while also ensuring that the SROs retain sufficient voting power to act jointly on behalf of the plan pursuant to the requirements of Section 11A of the Act and Rule 608 of Regulation NMS.[222] The Commission also believes that broader representation on the New Consolidated Data Plan operating committee would help to ensure that decisions relating to New Consolidated Data Plan operations support the prompt, accurate, reliable, and fair dissemination of core data.[223]

4. Consolidating the Three Equity Data Plans Into a Single New Consolidated Data Plan

Although the Equity Data Plans are structured as three separate NMS plans—which reflects the less integrated equity markets at the time the Equity Data Plans were organized and approved—the three Equity Data Plans now have identical operating committees that hold joint meetings to oversee the collection, processing, and distribution of SIP data in today's tightly integrated equity markets. Additionally, the three Equity Data Plans have the same advisory committee members, who function as one advisory committee for all three Equity Data Plans. The three Equity Data Plans also have overlapping administrative and regulatory functions and share the same revenue distribution formula, legal representation, and other professional services. The Commission believes that maintaining three separate Equity Data Plans is inefficient and creates redundant efforts on the part of the operating and advisory committee members that unnecessarily burden ongoing improvements to the SIPs and that contribute to certain duplicative costs. These redundant efforts include, among other things, maintaining accounting for three sets of legal and auditor fees, maintaining books and records for the Equity Data Plans' businesses, filing separate amendments regarding some aspects of the Equity Data Plans with the Commission, and devoting personnel resources to coordinate and facilitate three separate Equity Data Plans.

The Commission therefore believes that there should be one New Consolidated Data Plan to promote the application of consistent policies, procedures, terms, fees, and conditions that would be more transparent and easily understood across all data products offered and that reflect the provisions that are the subject of this Order. The Commission also believes that replacing the three existing Equity Data Plans with a single New Consolidated Data Plan with the governance structure discussed above would simplify the process of making future enhancements to the Equity Data Plans' operations so that core data meets on a continuing basis the needs of market participants and furthers the objectives of Section 11A of the Act.[224]

Finally, the Commission believes that the terms of the New Consolidated Data Plan should provide for the orderly transition of functions and responsibilities from the three Equity Data Plans to the New Consolidated Data Plan. The Commission believes that the Participants, because of their significant experience in the operations of NMS plans, are well positioned to propose an efficient and orderly transition as part of the New Consolidated Data Plan they file with the Commission.

D. The Operation of the New Consolidated Data Plan

Given the importance of core data to the national market system, as recognized by both Congress and the Commission, and consistent with Rule 608 of Regulation NMS,[225] the Commission believes that the terms, policies, and procedures of the New Consolidated Data Plan should promote the joint work of the SRO members (*i.e.,* members that represent an exchange group or an unaffiliated SRO) and non-SRO members of the operating committee to ensure the prompt, accurate, reliable, and fair dissemination of core data.[226] The Commission has set forth below certain governance provisions that the Commission believes would enable the New Consolidated Data Plan to address these issues.

1. The Role and Responsibilities of the Operating Committee

The Commission believes that the New Consolidated Data Plan should set forth the role and responsibilities of the operating committee. The Commission believes that the duties of the operating committee should include, at a minimum, the provisions described below.

The New Consolidated Data Plan should state that the operating committee should be responsible for proposing amendments to the New Consolidated Data Plan or implementing other policies and procedures, as necessary, to ensure the prompt, accurate, reliable, and fair collection, processing, distribution, and publication of information with respect to quotations for and transactions in NMS stocks and the fairness and usefulness of the form and content of that information, consistent with the goals of Section 11A of the Act.[227] While each of the Equity Data Plans includes a general provision stating that the operating committees will propose changes to the Equity Data Plans through amendments, the Commission believes that the New Consolidated Data Plan should specifically provide that the responsibilities of the operating committee include proposing amendments to ensure that SIP data is distributed consistent with these statutory goals. The Commission believes that such a provision would encourage the operating committee to actively examine New Consolidated Data Plan operations and propose to change provisions of the New Consolidated Data Plan (or policies and procedures thereunder) that are no longer effective in carrying out the objectives of the Act.

The Commission believes that the New Consolidated Data Plan operating committee's role should also include selecting, overseeing, specifying the role and responsibilities of, and evaluating the performance of, an independent plan administrator,[228] plan processors, a firm to examine and assess data usage reports and fee payments by subscribers (''auditor''),[229] and other professional service providers. While the Equity Data Plans provide that the performance of the processor must be reviewed,[230] the Commission believes that this obligation should be expanded to cover other professional service providers that have a significant role in the operations of the New Consolidated Data Plan to ensure that the non-SRO members of the New Consolidated Data Plan operating committee have a voice in these matters.

With respect to reviewing the performance of the New Consolidated

[220] 15 U.S.C. 78k–1.

[221] *See supra* note 102.

[222] 15 U.S.C. 78k–1 and 17 CFR 242.608.

[223] *See* 15 U.S.C. 78k–1(c)(1)(B).

[224] 15 U.S.C. 78k-1. The Commission notes that, recently, as part of a comprehensive recommendation on reforming the U.S. equity markets, Nasdaq recommended consideration of consolidating the NMS plans for disseminating equity market data. *See* Nasdaq Total Markets Paper, *supra* note 45, at 21.

[225] 17 CFR 242.608.

[226] *See supra* note 102.

[227] 15 U.S.C. 78k–1; *see supra* note 102.

[228] *See infra* note 234 and accompanying text.

[229] *See supra* note 164 and accompanying text.

[230] *See* Section V.(d) of the CTA Plan; Section V.(d) of the CQ Plan; Section V.A. of the UTP Plan.

Data Plan's processor(s), the Commission believes that the operating committee's role should include ensuring the public reporting of the performance of the processor(s) and other metrics and information about the processor(s). The CTA Plan requires the operating committee to periodically review whether ''the Processor has failed to perform its functions in a reasonably acceptable manner in accordance with the provisions of [the] CQ Plan,'' whether ''its reimbursable expenses have become excessive and are not justified on a cost basis,'' and whether ''the Processor should continue in such capacity or should be replaced.'' [231] The CTA Plan also states that, in reviewing the performance of the processor, the operating committee shall consider factors such as ''experience, technological capability, quality and reliability of service, relative costs, back-up facilities, and regulatory considerations.'' [232]

The Commission believes that the provisions in the New Consolidated Data Plan regarding the review of the processor(s) should also include a requirement that the results of the performance evaluation be made public, along with the metrics used to evaluate the processor(s) and other pertinent information about the processor(s). The Commission believes that making this information public would provide all market participants with a view of how well or poorly a processor is performing across various metrics, which would allow market participants to provide meaningful input to the operating committee and to the Commission. Further, the Commission believes that, if performance metrics are made public, the operating committee of the New Consolidated Data Plan would have enhanced incentives to ensure that the processor is functioning well and that the New Consolidated Data Plan is providing prompt, accurate, and reliable publication of information with respect to quotations for and transactions in NMS stocks.[233]

The Commission further believes that the administrator of the New Consolidated Data Plan should be independent, meaning that the administrator should not be owned or controlled by a corporate entity that separately offers for sale a market data product, either directly or via another subsidiary. As discussed above, the Commission believes that an entity that acts as the administrator while also offering its own proprietary data products faces a substantial, inherent conflict of interest, because it would have access to sensitive customer information.[234] While conflict-of-interest and confidentiality provisions of the New Consolidated Data Plan, or of the administrator, may serve to mitigate conflicts to some extent, the Commission believes the conflicts of interest faced by a non-independent administrator are so great that these conflicts cannot be sufficiently alleviated through policies and procedures.

The Commission also believes that a requirement that the New Consolidated Data Plan administrator be independent would address concerns that have been raised about the burdens imposed by the current audit process for the Equity Data Plans.[235] Specifically, the Commission believes that the oversight of an independent plan administrator would help to ensure that the burdens imposed by the audit process are fair, that they are reasonably related to ensuring that data subscribers pay the amounts properly due for their data usage, and that they are not designed in a manner that affects the decision making of subscribers when determining whether to purchase proprietary TOB data feeds.

Additionally, the Commission believes that the New Consolidated Data Plan should provide that any expenditures for professional services—including for example, legal counsel, public relations, and accounting services—that are paid for using New Consolidated Data Plan revenues must be for activities consistent with the terms of the New Consolidated Data Plan and must be authorized by an augmented majority of the operating committee. Because the New Consolidated Data Plan's governance structure would be designed to represent the interests of a broad range of market participants—who may at times hold diverging views about how the New Consolidated Data Plan should operate—the Commission believes that requiring that professional services engaged by the New Consolidated Data Plan be consistent with the terms of the New Consolidated Data Plan and be authorized by an augmented majority vote would help ensure that New Consolidated Data Plan resources are expended in furtherance of the purposes of the New Consolidated Data Plan and that both SRO and non-SRO members of the operating committee have input into this important aspect of New Consolidated Data Plan operations.

Further, the Commission believes that the New Consolidated Data Plan should include provisions to ensure that the operating committee is responsible for assessing the marketplace for equity market data products and ensuring that SIP data offerings are priced in a manner that is fair and reasonable and are designed to ensure the widespread availability of SIP data [236] that is useful to a broad range of investors and other market participants.[237] Imposing a direct responsibility on the operating committee of the New Consolidated Data Plan to keep abreast of changes in the marketplace regarding demands for and pricing of equity market data, and to ensure that SIP data meets those demands and are widely distributed at fair and reasonable prices, should help ensure that the SIPs' data feeds support the findings and goals of Section 11A of the Act.[238]

Finally, the Commission believes that the New Consolidated Data Plan operating committee's role should include designing and maintaining a fair and reasonable revenue allocation formula for distributing plan revenues to be applied by the independent plan administrator, and overseeing, reviewing and revising that formula as needed. Over the past several years, market participants have suggested updating the market data revenue allocation.[239] For example, during the

[231] Section V.(d) of the CTA Plan.

[232] *Id.*

[233] *See* 15 U.S.C. 78k–1(c)(1)(B).

[234] As noted above, NYSE and Nasdaq currently act as administrators of the Equity Data Plans, which provides certain employees of these exchanges, through the subscriber audit process, with access to confidential data subscriber information. *See supra* note 52. Under the independence provision discussed above, NYSE and Nasdaq would be excluded from operating as plan administrators, although they would not be excluded from continuing to act as SIPs. There is precedent in other NMS plans for the roles of administrator and processor to be performed by different entities. As an example, for the NMS plan that governs the collection, consolidation, processing, and dissemination of last sale and quotation information for listed options—the Limited Liability Company Agreement of Options Price Reporting Authority, LLC Plan—Cboe Exchange, Inc. serves as the plan administrator and SIAC serves as the processor. The Commission notes that there would be some loss of revenue to the exchange groups currently acting as administrators to the Equity Data Plans if they are excluded from acting as plan administrator for the New Consolidated Data Plan.

[235] *See supra* notes 164–165 and accompanying text.

[236] *See supra* note 16.

[237] *See* 15 U.S.C. 78k–1(c)(1)(C) (providing that the Commission shall assure the usefulness of the form and content of information with respect to quotations for and transactions in securities).

[238] 15 U.S.C. 78k–1.

[239] *See, e.g.,* Transcript of EMSAC Meeting (Apr. 5, 2017), at 0037:5–11 (statement of Adam Nunes, Hudson River Trading), *available at https://www.sec.gov/spotlight/equity-market-structure/emsac-transcript-040517.txt* (''We had people splitting all their trades up into hundred-share lots to maximize their revenue share. And now, we look today with . . . quote-sharing where . . . you see

Continued

Roundtable, one panelist recommended that the Commission undertake rulemaking to simplify the revenue allocation formula.[240] Another panelist highlighted work done to increase transparency on the revenue allocation formula, including publishing a ''plain-language version of the revenue allocation formula'' on the Equity Data Plans' websites.[241] In addition, Nasdaq has stated that the revenue allocation formula needs improvement as certain exchanges have ''skewed the expected allocation of revenue by attracting displayed quotations without executing a commensurate number of trades.'' [242] Nasdaq has expressed support for modifying the revenue allocation formula to reward displayed quotes where investors receive an execution.[243] The Commission believes that the operating committee of the New Consolidated Data Plan, with the broader representation of market participants contemplated by this Order, would be well situated to address issues such as these regarding Equity Data Plans' revenue allocation.

2. Executive Session Policy

In response to requests for improving the transparency of the use of executive session (*i.e.,* meetings from which members of the advisory committee are excluded),[244] the Equity Data Plans have implemented an executive session policy under which the following topics are appropriate for consideration or action in executive session: Fees that require discussion of non-public financial information; subscriber audit findings; discussions requiring the disclosure of material non-public information; financial reports containing non-public financial information; the portion of a discussion or evaluation of administrator and processor performance that includes confidential information; contract negotiations, awards, and revocations that contain confidential information; advisory committee member selection; litigation matters; and confidential, non-public discussions with the Commission and its staff.[245] While the Commission believes that the New Consolidated Data Plan would have no need to provide for an advisory committee,[246] the Commission expects that the SROs will continue to hold executive sessions that will exclude non-SRO members of the operating committee. Thus, the Commission believes the New Consolidated Data Plan should include an executive session policy.

During the Roundtable, exchanges pointed to progress on limiting the use of executive sessions by the SROs.[247] One exchange commenter highlighted recent improvements in transparency that have resulted from shifting more discussions about SIP operations from executive sessions to the general sessions.[248] Another exchange commenter expressed a willingness to increase public transparency of SIP operations and limit time spent in executive sessions.[249] Other panelists, however, raised continuing concerns.[250] For example, one industry panelist stated there should be a ''litmus test'' for determining if a matter deserved executive session consideration.[251]

The Commission believes that, by permitting the SROs to hold discussions and make decisions in executive session without the advisory committee members present, the Equity Data Plans have limited the ability of advisory committee members to influence the operation of the Equity Data Plans.[252] While the Commission recognizes there may be circumstances in which deliberation by the SROs alone may be appropriate, any overuse of executive session limits transparency on Equity Data Plans' governance and has the potential to impede the advisory committee's ability to exercise its voice in key decisions.

The Commission acknowledges that the current Equity Data Plans' executive session policies provide some specificity regarding the subject matters eligible for executive session. The Commission believes, however, that the list of eligible items for executive session under the New Consolidated Data Plan should be more limited, particularly given that, as contemplated by this Order, the membership of the New Consolidated Data Plan operating committee would include non-SRO members.[253] Therefore, the Commission believes that the New Consolidated Data Plan should include an executive session policy that permits the SROs to hold executive sessions only in circumstances when it is appropriate to

a massive disparity between exchanges' quote share and their market share. So, I do think that that's something that should be addressed.''); Letter from David M. Weisberger, President, Exquam LLC (Mar. 24, 2017), at 4–5, *available at https://www.sec.gov/comments/265-29/26529-1666811-148978.pdf* (stating that the ''quote based calculation in the rule is . . . flawed'' and recommending that the allocation formula be based ''on the value of trades in each stock resulting from interaction with a displayed quote.'').

[240] *See* Day One Transcript, *supra* note 38, at 117:1–2 (statement of Michael Blaugrund, NYSE) (recommending that the Commission undertake rulemaking to simplify the revenue allocation formula).

[241] Day Two Transcript, *supra* note 113, at 90:13–16 and 97:16–22 (statements of Emily Kasparov, Chicago Stock Exchange, Inc. (n/k/a NYSE Chicago)).

[242] *See* Nasdaq Total Markets Paper, *supra* note 45, at 22. *See also* Day Two Transcript, *supra* note 113, at 174:25–175:10 (statement of John Yetter, Nasdaq); Nasdaq 2018 Letter, *supra* note 177, at 5.

[243] *See id.* (''If the goal of consolidated data is to improve market quality, the revenue allocation formula should aim to improve the quality of quotes on public exchanges, where available liquidity is always on display and an execution can be accomplished.'').

[244] *See, e.g.,* EMSAC Governance Recommendations, *supra* note 136, at 2.

[245] The Commission's understanding of the executive session policies of the Equity Data Plans is based on information obtained by the Commission or its staff as part of the Commission's oversight of the Equity Data Plans.

[246] *See infra* note 253.

[247] Day Two Transcript, *supra* note 113, at 141:3–18 (statement of Emily Kasparov, Chicago Stock Exchange, Inc. (n/k/a NYSE Chicago)). One exchange commenter highlighted meeting minutes that showed SIP Participants spending little time in executive sessions. *See* Nasdaq 2018 Letter, *supra* note 177, at 21 (''The executive session minutes reveal that the SIP Participants spend very little time in executive session, as little as 12 minutes in the last meeting.''). This commenter also stated that ''[g]overnance of the SIPs is substantially more transparent than it once was'' and that advisory committee members ''enjoy access to information that is nearly coextensive with that of the SIP Participants.''

[248] *See* NYSE Letter, *supra* note 137, at 19 (''Among other things, the Operating Committees have shifted most discussions about SIP operations from its Executive Sessions, which are not attended by the Advisory Committee, to the General Sessions, which are. The Operating Committee also provides transparency into why an agenda item is confidential and should be included in the Executive Session and requires a vote by the Plan participants before an agenda item is moved to the Executive Session.'').

[249] *See* Letter from Oliver Albers, SVP, Head of Global Partnerships, Nasdaq (Oct. 24, 2018), at 9, *available at https://www.sec.gov/comments/4-729/4729-4560081-176209.pdf.*

[250] Day Two Transcript, *supra* note 113, at 143:16–21 (statement of John Ramsay, IEX) (''I have witnessed cases where matters end up in executive session because they're sensitive, in the sense that the committee members might come under criticism from folks in the industry, rather than it's really so much a direct conflict of the type that really should require executive session.''); *id.* at 144:8–19 (statement of Hubert de Jesus, Blackrock) (expressing concern for the carve-outs permitting use of executive session).

[251] *See* Day Two Transcript, *supra* note 113, at 145:11–15 (statement of Kevin Cronin, Invesco).

[252] *See* Fidelity Letter, *supra* note 114, at 4 (''SIP Operating Committees typically meet in an executive session for formal votes. SIP Advisory Committee members act in a consultative role on select issues that the Operating Committees choose to bring to them, and Advisory Committee members are not invited to, nor do they have a vote on, matters discussed in the Operating Committees.''); SIFMA, Proposal for the Creation of Competing Market Data Aggregators, at 13 (attached to SIFMA Letter III, *supra* note 57) (''Advisory committee members are given no substantive voice in the operation of the SIPs, and the SROs conduct all of the meaningful business of the SIPs in executive session, from which advisory committee members are excluded.'').

[253] As noted above, the Commission believes that non-SRO members should have voting rights on the New Consolidated Data Plan operating committee, and therefore the New Consolidated Data Plan would not need to provide for an advisory committee. *See supra* note 155 and accompanying text.

exclude non-SRO members of the operating committee, such as, for example, discussions regarding matters that exclusively affect the SROs with respect to the Commission's oversight of the New Consolidated Data Plan (including attorney-client communications relating to such matters). The Commission also believes that, in furtherance of greater transparency, the New Consolidated Data Plan should require that a request to enter into an executive session be included on the written agenda along with a clearly stated rationale for each matter to be discussed and be approved by a majority vote of the SRO members of the operating committee.

3. Conflicts of Interest Policy

Several Roundtable panelists discussed imposing a disclosure-based policy to address conflicts of interest concerns,[254] including one exchange that supported greater disclosure—for both the SROs and advisory committee members.[255] Another exchange stated that the operating committees of the Equity Data Plans should not have exchange representatives who have a ''direct-line responsibility for proprietary data.'' [256] Other commenters and one panelist observed that the advisory committee members are not immune to conflicts of interest [257] and recommended that the Equity Data Plans establish a conflict-of-interest identification and management provision, as well as enforcement mechanisms, for both the SROs and advisory committee members.[258]

The Commission believes that the New Consolidated Data Plan should include a comprehensive conflicts of interest policy. As discussed above, in the Commission's view, conflicts of interest are inherent to the Equity Data Plans' current governance structure because some exchange Participants have a dual role as both an SRO jointly responsible for the operation of the Equity Data Plans and part of a publicly held company that offers proprietary data products.[259] Moreover, an SRO representative on the operating committee may have direct responsibility for some or all of an exchange's proprietary data business. Recognizing that non-SRO representatives in the New Consolidated Data Plan may also have dual roles as voting members of the operating committee and employees of businesses that utilize core data or proprietary data feeds, the Commission believes that the New Consolidated Data Plan should include comprehensive conflict-of-interest provisions for both SRO and non-SRO representatives of the operating committee.[260]

4. Confidentiality Policy

In the operation of the Equity Data Plans, Participants and Participant representatives have been privy to confidential and proprietary information of substantial commercial or competitive value, including, among other things, information about core data usage, the SIPs' customer lists, financial information, and subscriber audit results.[261] However, the terms of the Equity Data Plans do not address commercial use of confidential or proprietary information by the Participants. The Commission therefore believes that the New Consolidated Data Plan should include provisions regarding the treatment of confidential information.

5. Other Provisions of the New Consolidated Data Plan

Because SIP data plays a critical role in the operation of the national market system, the Commission believes that the prompt, accurate, reliable, and fair collection, processing, distribution, and publication of SIP data must be maintained through the transition from the existing Equity Data Plans to the New Consolidated Data Plan. Therefore, the Commission believes that the New Consolidated Data Plan's terms should provide for the orderly and predictable transition of functions and responsibilities from the three existing Equity Data Plans to the New Consolidated Data Plan. The Commission believes that this transition should contemplate a period of time during which the Equity Data Plans continue to have responsibility for the collection, processing, and dissemination of SIP data, and for determining, collecting, and allocating data fees, while the New Consolidated Data Plan commences operations and prepares to assume responsibility for SIP data.

The Commission believes that this transition period should provide that, before the New Consolidated Data Plan assumes responsibility for the dissemination of SIP data, the members of the New Consolidated Data Plan operating committee will be selected and the New Consolidated Data Plan operating committee will have a reasonable period of time to launch its formal operations. For example, before commencing operations, the operating committee of the New Consolidated Data Plan would need to, among other things, select plan processors [262] and an independent plan administrator, and adopt a fee schedule. In particular, as part of this transition, the Commission believes that until the New Consolidated Data Plan has become operational, fees for data products disseminated by the SIPs should continue to be governed by the provisions of the existing Equity Data Plans. As discussed above,[263] the Commission believes that the SROs face inherent conflicts of interest with respect to the operation of the Equity Data Plans, and the Commission therefore believes that a schedule of fees for data products offered by the New Consolidated Data Plan should be filed by the New Consolidated Data Plan operating committee, which would reflect broader representation of market

[254] *See, e.g.,* Day Two Transcript, *supra* note 113, at 117:24–118:7 (statement of Richard Ketchum, Former CEO of FINRA).

[255] *See* Day Two Transcript, *supra* note 113, at 108:3–20 (statement of Bryan Harkins, Cboe).

[256] Day Two Transcript, *supra* note 113, at 125:15–18 (statement of John Ramsay, IEX).

[257] *See, e.g.,* Day Two Transcript, *supra* note 113, at 117:22–23 (statement of Richard Ketchum, Former CEO of FINRA) (''Industry members obviously have conflicts in a variety of ways.'').

[258] *See* Healthy Markets Letter, *supra* note 113, at 16 (''These 'appointed' members may dominate the committee's membership and may also have loyalties and business interests that may conflict with sound governance practices. This concern may be exacerbated if Advisory Committee members remain on the committee for extended periods of time, or if the leadership of the committee does not rotate.''); *id.* at 40 (recommending that the Commission ''[e]stablish clear conflicts of interest identification and management provisions and enforcement mechanisms for both Operating Committee and Advisory Committee members''); Nasdaq 2018 Letter, *supra* note 177, at 20 (''Expanding the authority of the advisory committees magnifies potential conflicts of interest that must be acknowledged, controlled, and coupled with increased obligations to promote public transparency. For example, market participants that operate their own 'dark pools' are simultaneously SIP customers, SIP revenue recipients, and SRO competitors.''); NYSE Group Letter, *supra* note 116, at 19 (''[A]bsent the same regulatory obligations of exchanges, Advisory Committee members would not have an incentive to cast their votes consistent with the terms of the Plan.'').

[259] As discussed above, the Commission has observed that advisory committee members currently have limited ability to participate in the decision making of the Equity Data Plans, and the interests of many shareholders of the exchanges may not be aligned with members' interests or the interests of other interested parties. *See supra* Section II.B.1.

[260] *See* Day Two Transcript, *supra* note 113, at 92:16–20 (statement of Hubert de Jesus, Blackrock) (stating that the conflicts of interest policy should address the core conflict between SIP and proprietary data feed interests and establish procedures to manage these conflicts among representatives).

[261] *See supra* note 118–119 and accompanying text.

[262] The role of the operating committee of the New Consolidated Data Plan would include selecting plan processors.

[263] *See supra* Section II.A.

participants. The Commission believes that this should help to mitigate the conflicts of interest faced by the exchanges and should help to ensure that decisions relating to New Consolidated Data Plan operations support the prompt, accurate, reliable, and fair dissemination of core data.[264]

Finally, the Commission recognizes that the Equity Data Plans govern the operations of separate and distinct SIPs, each of which contains unique features, and that the Equity Data Plans therefore contain distinct operational and technical provisions relating to these SIPs. In addition, the Equity Data Plans contain a number of provisions relating to other areas, including provisions specifically addressing governance, administrative, financial, and other miscellaneous matters. Under the New Consolidated Data Plan, there would be one NMS plan, along with one independent plan administrator, responsible for the governance and operation of multiple SIPs. The Commission believes, therefore, that the New Consolidated Data Plan submitted by the SROs under this Order should propose to adopt and include all other provisions of the Equity Data Plans necessary for the operation and oversight of the SIPs under the New Consolidated Data Plan, provided that these additional provisions are in furtherance of the purposes of the New Consolidated Data Plan as expressed in this Order and are not inconsistent with any regulatory requirements. Further, the New Consolidated Data Plan should, where possible, attempt to harmonize inconsistencies among, and combine duplicate provisions in, the Equity Data Plans that do not unavoidably arise from the existence of separate and distinct SIPs. Finally, as discussed above, existing fee schedules should continue to remain in effect under the Equity Data Plans until a fee schedule for the New Consolidated Data Plan, authorized by the new operating committee of the New Consolidated Data Plan after it is constituted, becomes effective.

* * * * *

As noted above, Section 11A(a)(2) of the Act[265] directs the Commission, having due regard for the public interest, the protection of investors, and the maintenance of fair and orderly markets, to facilitate the establishment of a national market system for securities. Section 11A(a)(3)(B) provides the Commission the authority to require the SROs, by order, ''to act jointly . . . in planning, developing, operating, or regulating a national market system (or a subsystem thereof).''[266]

For the reasons discussed above, the Commission believes that it is in the public interest to require the Participants in the Equity Data Plans to jointly develop and file with the Commission a New Consolidated Data Plan as an NMS plan pursuant to Rule 608(a) of Regulation NMS.[267]

III. The New Consolidated Data Plan

The Commission hereby orders the Participants in the Equity Data Plans to jointly develop and file with the Commission, as an NMS plan pursuant to Rule 608(a) of Regulation NMS,[268] a single New Consolidated Data Plan that consolidates the three current Equity Data Plans and that includes, at a minimum, the following terms and conditions:

- The New Consolidated Data Plan shall provide for the orderly transition of functions and responsibilities from the three existing Equity Data Plans and shall provide that dissemination of, and fees for, SIP data will continue to be governed by the provisions of the Equity Data Plans until the New Consolidated Data Plan is ready to assume responsibility for the dissemination of SIP data and fees of the New Consolidated Data Plan have been approved.
- The New Consolidated Data Plan shall provide that each exchange group and unaffiliated SRO will be entitled to name a member of the operating committee (SRO member), who will be authorized to cast one vote on all operating committee matters pertaining to the operation and administration of the New Consolidated Data Plan, provided that an SRO member representing an exchange group or an unaffiliated SRO whose market center(s) have consolidated equity market share of more than 15% during four of the six calendar months preceding a vote of the operating committee will be authorized to cast two votes, and provided that an SRO member representing an exchange that has ceased operations as an equity trading venue, or has yet to commence operation as an equity trading venue, will not be permitted to cast a vote on New Consolidated Data Plan matters.
- The New Consolidated Data Plan shall provide that the operating committee will include, for a term of two years, and for a maximum term to be set forth in the New Consolidated Data Plan, individuals representing each of the following categories: An institutional investor (*e.g.,* an asset management firm), a broker-dealer with a predominantly retail investor customer base, a broker-dealer with a predominantly institutional investor customer base, a securities market data vendor, an issuer of NMS stock, and a retail investor (*i.e.,* Non-SRO Members), provided that the representatives of the securities market data vendor, the issuer, and the retail investor, respectively, may not be affiliated with an SRO, a broker-dealer, or an institutional investor.
- The New Consolidated Data Plan shall provide that the initial Non-SRO Members will be selected by a majority vote of those current members of the Equity Data Plans' advisory committees, excluding advisory committee members who were selected by a Participant to be its representative, and, further, that until the initial Non-SRO Members have been selected, the Participants shall renew the expiring terms of all members of the Equity Data Plans' advisory committee (other than those selected to represent a Participant) who remain willing to serve in that role.
- The New Consolidated Data Plan shall provide for a fair and transparent nomination process for Non-SRO Members.
- The New Consolidated Data Plan shall provide that the aggregate number of votes provided to Non-SRO Members will, at all times, be one half of the aggregate number of SRO member votes and the number of Non-SRO Member votes will increase or decrease as necessary to ensure that the ratio between the number of SRO member votes and the number of Non-SRO Member votes is maintained, with Non-SRO Member votes equally allocated, by fractional shares of a vote as necessary, among the Non-SRO Members authorized and eligible to vote.
- The New Consolidated Data Plan shall include provisions to address circumstances in which a member is unable to attend an operating committee meeting or to cast a vote on a matter.
- The New Consolidated Data Plan shall provide that all actions under the terms of the New Consolidated Data Plan, except for the selection of Non-SRO Members and decisions to enter into an SRO-only executive session, will be required to be authorized by an augmented majority vote.
- The New Consolidated Data Plan shall provide that the responsibilities of the operating committee will include:

[264] *See* 15 U.S.C. 78k–1(c)(1)(B).

[265] 15 U.S.C. 78k–1(a)(2).

[266] 15 U.S.C. 78k–1(a)(3)(B).

[267] 17 CFR 242.608(a).

[268] 17 CFR 242.608(a). The New Consolidated Data Plan, or any amendment thereto, must comply with the requirements of Rule 608 of Regulation NMS, including the requirement in Rule 608(a) to include an analysis of the impact on competition. 17 CFR 242.608(a).

○ Proposing amendments to the New Consolidated Data Plan or implementing other policies and procedures as necessary to ensure prompt, accurate, reliable, and fair collection, processing, distribution, and publication of information with respect to quotations for and transactions in NMS stocks and the fairness and usefulness of the form and content of that information;

○ selecting, overseeing, specifying the role and responsibilities of, and evaluating the performance of, an independent plan administrator, plan processors, an auditor, and other professional service providers, provided that any expenditures for professional services that are paid for from New Consolidated Data Plan revenues must be for activities consistent with the terms of the New Consolidated Data Plan and must be authorized by an augmented majority of the operating committee;

○ developing and maintaining fair, reasonable, and consistent terms and fees for the distribution, transmission, and aggregation of core data;

○ reviewing the performance of the plan processors; and ensuring the public reporting of plan processors' performance and other metrics and information about the plan processors;

○ assessing the marketplace for equity market data products and ensuring that SIP data offerings are priced in a manner that is fair and reasonable, and designed to ensure the widespread availability of SIP data to investors and market participants; and

○ designing a fair and reasonable revenue allocation formula for allocating plan revenues to be applied by the independent plan administrator, and overseeing, reviewing and revising that formula as needed.

• The New Consolidated Data Plan shall provide that the independent plan administrator will not be owned or controlled by a corporate entity that offers for sale its own proprietary market data product, either directly or via another subsidiary.

• The New Consolidated Data Plan shall include provisions designed to address the conflicts of interest of SRO Members and Non-SRO Members.

• The New Consolidated Data Plan shall include provisions designed to protect confidential and proprietary information from misuse.

• The New Consolidated Data Plan shall provide that the use of executive session of SRO members will be confined to circumstances in which it is appropriate to exclude Non-SRO Members, such as, for example, discussions regarding matters that exclusively affect the SROs with respect to the Commission's oversight of the New Consolidated Data Plan (including attorney-client communications relating to such matters).

• The New Consolidated Data Plan shall provide that requests to enter into an executive session of SRO members will be required to be included on a written agenda, along with a clearly stated rationale for each matter to be discussed and must be approved by a majority vote of the SRO members of the operating committee.

• To the extent that those provisions are in furtherance of the purposes of the New Consolidated Data Plan as expressed in this Order and not inconsistent with any other regulatory requirements, the New Consolidated Data Plan shall adopt and include all other provisions of the Equity Data Plans necessary for the operation and oversight of the SIPs under the New Consolidated Data Plan, and the New Consolidated Data Plan should, to the extent possible, attempt to harmonize and combine existing provisions in the Equity Data Plans that relate to the Equity Data Plans' separate processors.

* * * * *

It is hereby ordered, pursuant to Section 11A(a)(3)(B) of the Act,[269] that the Participants act jointly in developing and filing with the Commission, as an NMS plan pursuant to Rule 608(a) of Regulation NMS,[270] a New Consolidated Data Plan, as described above. The Participants are ordered to file the New Consolidated Data Plan with the Commission no later than [90 days after the order is issued].

By the Commission.

Vanessa Countryman,
Secretary.

[FR Doc. 2020–00360 Filed 1–13–20; 8:45 am]

BILLING CODE 8011–01–P

[269] 15 U.S.C. 78k–1(a)(3)(B).

[270] 17 CFR 242.608(a).

SECURITIES AND EXCHANGE COMMISSION

[Release No. 34–87912; File No. SR–NSCC–2019–802]

Self-Regulatory Organizations; National Securities Clearing Corporation; Notice of Filing of Advance Notice To Issue Term Debt as Part of Its Liquidity Risk Management

January 8, 2020.

Pursuant to Section 806(e)(1) of Title VIII of the Dodd-Frank Wall Street Reform and Consumer Protection Act entitled the Payment, Clearing, and Settlement Supervision Act of 2010 (''Clearing Supervision Act'')[1] and Rule 19b–4(n)(1)(i) under the Securities Exchange Act of 1934 (''Act''),[2] notice is hereby given that on December 13, 2019, National Securities Clearing Corporation (''NSCC'') filed with the Securities and Exchange Commission (''Commission'') the advance notice SR–NSCC–2019–802 (''Advance Notice'') as described in Items I, II and III below, which Items have been prepared by the clearing agency. The Commission is publishing this notice to solicit comments on the Advance Notice from interested persons.

I. Clearing Agency's Statement of the Terms of Substance of the Advance Notice

This Advance Notice is filed by NSCC in connection with a proposal to raise additional prefunded liquidity resources through the periodic issuance and private placement of term debt (''Debt Issuance''). The proceeds from the Debt Issuance would supplement NSCC's existing default liquidity risk management resources. The proposed changes are described in greater detail below.

II. Clearing Agency's Statement of the Purpose of, and Statutory Basis for, the Advance Notice

In its filing with the Commission, NSCC included statements concerning the purpose of and basis for the Advance Notice and discussed any comments it received on the Advance Notice. The text of these statements may be examined at the places specified in Item IV below. NSCC has prepared summaries, set forth in sections A and B below, of the most significant aspects of such statements.

(A) Clearing Agency's Statement on Comments on the Advance Notice Received From Members, Participants, or Others

Written comments on the Advance Notice have not been solicited or received. NSCC will notify the Commission of any written comments received by NSCC.

(B) Advance Notice Filed Pursuant to Section 806(e) of the Clearing Supervision Act

Description of Proposed Change

NSCC is proposing to raise additional prefunded liquidity through the periodic issuance and private placement of term debt to qualified institutional investors in an aggregate amount not to exceed $10 billion, as described in

[1] 12 U.S.C. 5465(e)(1).

[2] 17 CFR 240.19b–4(n)(1)(i).

greater detail below. The proceeds of the Debt Issuance would supplement NSCC's existing default liquidity resources, which also include, for example, the proceeds of the issuance and private placement of short-term, unsecured notes in the form of commercial paper and extendable notes (''Commercial Paper Program'') [3] and cash that would be obtained by drawing upon NSCC's committed 364-day credit facility with a consortium of banks (''Line of Credit'').[4]

NSCC, along with its affiliates, The Depository Trust Company (''DTC'') and Fixed Income Clearing Corporation (''FICC,'' and, together with NSCC and DTC, the ''Clearing Agencies''), maintain a Clearing Agency Liquidity Risk Management Framework (''Framework''), which sets forth the manner in which NSCC measures, monitors and manages the liquidity risks that arise in or are borne by it.[5] NSCC periodically measures its liquidity needs pursuant to the Framework.[6] NSCC's default liquidity resources collectively provide NSCC with liquidity to complete end-of-day settlement in the event of the default of a Member.[7] The proposed Debt Issuance would supplement its existing default liquidity resources and provide NSCC with an additional resource it may draw from to meet its future liquidity needs, as measured pursuant to the Framework.[8]

By supplementing NSCC's existing default liquidity resources, the proposal would mitigate risks to NSCC that it is unable to secure default liquidity resources in an amount necessary to meet its liquidity needs. For example, the proposal would help mitigate the risks that investor demand for the short-term notes issued under the Commercial Paper Program weakens, or that NSCC is unable to renew its Line of Credit at the targeted amount.

Terms of the Debt Issuance. NSCC would engage a trustee and underwriting banks to issue the term debt to qualified institutional investors through a private placement and offering in reliance on an exemption from registration under Section 4(a)(2) of the Securities Act of 1933.[9] NSCC would be party to certain transaction documents in connection with each issuance and private placement, including an indenture with the trustee and purchase agreements. The purchase agreements would each be based on the standard form of dealer agreement for similar debt issuances, which is published by the Securities Industry and Financial Markets Association. The material terms and conditions of the Debt Issuance are summarized below.

NSCC is proposing to issue up to an aggregate amount of $10 billion in term debt, with an expected average amount issued and outstanding at any time of approximately $2–3 billion, as necessitated by liquidity needs. While, at the time of this filing, NSCC's current liquidity needs would not require it to issue up to an aggregate amount of $10 billion, NSCC believes that is advisable to authorize up to this aggregate amount in order to help manage its potential future liquidity needs and the potential risk that it is not able to obtain the requisite amounts from its other sources of default liquidity.

NSCC estimates that each issuance would be in an amount between approximately $250 million and $1.5 billion, with an initial issuance expected to be approximately $1 billion.[10] NSCC believes an initial issuance should be at an amount that would attract the attention of potential investors. Therefore, NSCC believes that approximately $1 billion would be an appropriate amount for the initial issuance for this reason.

The term debt would be represented by unsecured, unsubordinated and non-convertible medium-term and long-term global notes held in the name of The Depository Trust Company (''DTC''), or its nominee, Cede & Co. The notes would be issued and transferred only through the book-entry system of DTC. The term debt would be interest bearing at either fixed or floating interest rates that are set at market rates customary for such type of debt and reflective of the creditworthiness of NSCC.

NSCC expects the average maturity of the term debt issued under the Debt Issuance would range between two and ten years, which are the typical lengths of medium- and long-term debt. NSCC already issues short-term debt through the Commercial Paper Program,[11] and NSCC does not believe maturities over ten years would be suitable as debt with longer maturities are generally more expensive to issue and may present higher risks related to interest rates. NSCC would time each debt issuance and stagger maturity dates of each issuance in order to ladder the maturities. NSCC would have the ability to make use of optional features to call any of the issued term debt, in whole or in part, at any time prior to the maturity date of that debt. The issued term debt may also contain renewable terms.

NSCC would hold the proceeds from the Debt Issuance in either its cash deposit account at the Federal Reserve Bank of New York (''FRBNY'') or in accounts at other creditworthy financial institutions in accordance with the Clearing Agency Investment Policy.[12] These amounts would be available to draw to complete settlement as needed.

NSCC Liquidity Risk Management. As a central counterparty (''CCP''), NSCC occupies an important role in the securities settlement system by interposing itself between counterparties to financial transactions, thereby reducing the risk faced by its Members and contributing to global financial stability. NSCC's liquidity risk management plays an integral part in NSCC's ability to perform its role as a CCP. If a Member defaults, as a CCP, NSCC will need to complete settlement of guaranteed transactions on the failing Member's behalf from the date of default through the remainder of the settlement cycle (currently two days for securities

[3] *See* Securities Exchange Act Release Nos. 75730 (August 19, 2015), 80 FR 51638 (August 25, 2015) (File No. SR–NSCC–2015–802); 82676 (February 9, 2018), 83 FR 6912 (February 15, 2018) (File No. SR–NSCC–2017–807).

[4] *See* Securities Exchange Act Release No. 80605 (May 5, 2017), 82 FR 21850 (May 10, 2017) (File Nos. SR–DTC–2017–802; SR–NSCC–2017–802).

[5] *See* Securities Exchange Act Release Nos. 82377 (December 21, 2017), 82 FR 61617 (December 28, 2017) (File Nos. SR–DTC–2017–004; SR–FICC–2017–008; SR–NSCC–2017–005). Following approval of this proposal, the Clearing Agencies would file a proposed rule change to amend the Framework to include the proceeds of the Debt Issuance as an additional qualifying liquidity resource of NSCC.

[6] *Id.*

[7] Terms not defined herein are defined in NSCC's Rules and Procedures (''Rules'') *available at http://www.dtcc.com/~/media/Files/Downloads/legal/rules/nscc_rules.pdf.* The events that constitute a Member default are specified in Rule 46 (Restrictions on Access to Services) of the Rules, which provides that NSCC's Board of Directors may suspend a Member or prohibit or limit a Member's access to NSCC's services in enumerated circumstances; this includes default in delivering funds or securities to NSCC, or a Member's experiencing such financial or operational difficulties that NSCC determines, in its discretion, that restriction on access to services is necessary for its protection and for the protection of its membership. *Id.*

[8] *Supra* note 5.

[9] 15 U.S.C. 77d(a)(2).

[10] If market conditions at the time of the inaugural issuance are favorable, NSCC may issue an initial aggregate amount of more than $1 billion.

[11] *Supra* note 3.

[12] *See* Securities Exchange Act Release Nos. 79528 (December 12, 2016), 81 FR 91232 (December 16, 2016) (File Nos. SR–DTC–2016–007, SR–FICC–2016–005, SR–NSCC–2016–003); 84949 (December 21, 2018), 83 FR 67779 (December 31, 2018) (File Nos. SR–DTC–2018–012, SR–FICC–2018–014, SR–NSCC–2018–013). Following notice of no-objection by the Commission of this proposal, the Clearing Agencies would file a proposed rule change to amend the Clearing Agency Investment Policy to include the proceeds of the Debt Issuance as default liquidity funds, within the definition of ''Investable Funds,'' as such term is defined therein, and provide that such amounts would be held in bank deposits at eligible commercial banks or at NSCC's cash deposit account at the FRBNY.

that settle on a regular way basis in the U.S. markets).

As noted above, the Framework describes NSCC's liquidity risk management strategy to maintain sufficient liquidity resources in order to meet the potential funding required to settle outstanding transactions of a defaulting Member, or affiliated family of Members, in a timely manner.[13] The Framework also addresses how NSCC meets its requirement to hold qualifying liquid resources, as such term is defined in Rule 17Ad–22(a)(14) under the Act,[14] sufficient to meet its minimum liquidity resource requirement in each relevant currency for which it has payment obligations owed to its Members. NSCC considers each of its existing default liquidity resources to be qualifying liquid resources.[15] These resources include: (1) The cash in NSCC's Clearing Fund; [16] (2) the cash that would be obtained by drawing upon its Line of Credit; (3) additional cash deposits, known as ''Supplemental Liquidity Deposits'', designed to cover the heightened liquidity exposure arising around monthly option expiry periods, required from those Members whose activity would pose the largest liquidity exposure to NSCC; [17] and (4) cash proceeds from the Commercial Paper Program. The proceeds from the Debt Issuance would also be default liquidity that is considered a qualifying liquid resource.

By providing NSCC with additional, prefunded, and readily available qualifying liquid resources to be used to complete end-of-day settlement as needed in the event of a Member default, the Debt Issuance would provide additional certainty, stability, and safety to NSCC, its Members, and the U.S. equities market that it serves as a CCP.

NSCC believes the Debt Issuance may also reduce its concentration risk with respect to its default liquidity resources. NSCC would not limit the potential qualified institutional investors that purchase term debt and, therefore, is not able to ensure that the Debt Issuance would reduce concentration risk. However, the types of entities who typically invest in term debt include, for example, insurance companies, asset managers and pension funds, and these entities are generally not Members of NSCC or lenders under the Line of Credit. While these types of entities are the same types of entities that invest in commercial paper, the firms that invest in term debt are generally not the same firms that invest in commercial paper. Therefore, the prospective investors in the term debt are not expected to be the same firms that currently provide any material amount of default liquidity resources to NSCC either through the Commercial Paper Program or the Line of Credit, nor as NSCC Members.

Anticipated Effect on and Management of Risk

NSCC's consistent ability to timely complete settlement is a key part of NSCC's role as a CCP and allows NSCC to mitigate counterparty risk within the U.S. markets. In order to sufficiently perform this key role in promoting market stability, it is critical that NSCC has access to adequate liquidity resources to enable it to complete end-of-day settlement, notwithstanding the default of a Member. NSCC believes that the overall impact of the proposed Debt Issuance on risks presented by NSCC would be to reduce the liquidity risks associated with NSCC's operation as a CCP by providing it with an additional source of liquidity to complete end-of-day settlement in the event of a Member default. NSCC further believes that a reduction in its liquidity risk would reduce systemic risk and would have a positive impact on the safety and soundness of the clearing system.

While the proposed Debt Issuance, like any liquidity resource, would involve certain risks, most of these risks are standard in any debt issuance. One risk associated with the proposed Debt Issuance would be the risk that NSCC does not have sufficient funds to repay issued term debt when the notes mature. NSCC believes that this risk is extremely remote, as the proceeds of the Debt Issuance would be used only in the event of a Member default, and NSCC would replenish that cash, as it would replenish any of its liquidity resources that are used to facilitate settlement in the event of a Member default, with the proceeds of the close out of that defaulted Member's portfolio. This notwithstanding, in the event that proceeds from the close out are insufficient to fully repay a liquidity borrowing, then NSCC would look to its loss waterfall to repay any outstanding liquidity borrowings.[18] NSCC would further mitigate this risk through the timing of each debt issuance and by staggering the maturity dates of the issued term debt in a way that would provide NSCC with time to complete the close out of a defaulted Member's portfolio. A second risk is that NSCC may be unable to issue new term debt as issued notes mature due to, for example, stressed markets at the time the issued debt matures. This risk is mitigated by the fact that NSCC maintains a number of different default liquidity resources, described above, and would not depend on the Debt Issuance as its sole source of liquidity.

NSCC may face interest rate risk, which is the risk that the borrowing interest rate on issued debt is higher than the interest rate at which proceeds of issued debt would be invested. NSCC would mitigate this risk by issuing term debt at different maturities and at both fixed interest rates and floating interest rates. The interest rates for the term debt issued at floating interest rates would generally correlate with the rates on investments of those proceeds and would be expected to result in a largely stable net spread between the borrowing interest rate and the investment interest rate, mitigating this risk. For the term debt issued at a flat interest rate, NSCC would consider interest rate swaps as a method to mitigate interest rate risk, depending on market environment at that time.

NSCC could also face a related financial risk that the expense of a Debt Issuance exceeds NSCC's income and negatively impacts NSCC's financial health or its creditworthiness. NSCC would mitigate this risk by evaluating the expected interest rate risk (discussed above) and expense of a Debt Issuance prior to issuing any debt, and if the financing costs for the issuance of term debt increase, such that it is not financially advisable to issue additional term debt, then NSCC may determine to use its alternative liquidity resources to meet its liquidity needs during those market conditions.

NSCC believes that the significant systemic risk mitigation benefits of providing NSCC with additional, prefunded liquidity resources outweigh these risks.

Consistency With Clearing Supervision Act

NSCC believes that that proposal would be consistent with Title VIII of the Clearing Supervision Act, specifically with the risk management objectives and principles of Section 802(b)(1), and with certain of the risk management standards adopted by the Commission pursuant to Section 805(a)(2), for the reasons described below.[19]

[13] *Supra* note 5.

[14] 17 CFR 240.17Ad–22(a)(14).

[15] *Id.*

[16] *See* Rule 4 and Procedure XV of the Rules, *supra* note 5.

[17] Supplemental Liquidity Deposits are described in Rule 4A of the Rules, *supra* note 7.

[18] *See* Rule 4 (Clearing Fund) of the Rules, *supra* note 7.

[19] 12 U.S.C. 5464(a)(2) and (b)(1).

(i) Consistency With Section 805(b)(1) of the Clearing Supervision Act

Although the Clearing Supervision Act does not specify a standard of review for an advance notice, its stated purpose is instructive: To mitigate systemic risk in the financial system and promote financial stability by, among other things, promoting uniform risk management standards for systemically important financial market utilities and strengthening the liquidity of systemically important financial market utilities.[20]

NSCC believes the proposal is consistent with Section 805(b)(1) of the Clearing Supervision Act because it would support the mitigation of systemic risk in the financial system and promote financial stability in the event of a Member default by strengthening NSCC's liquidity. The proposed Debt Issuance is designed to reduce NSCC's liquidity risks by providing it with an additional source of liquidity to complete end-of-day settlement in the event of a Member default. By supplementing NSCC's existing default liquidity resources with prefunded liquidity, the proposal would contribute to NSCC's goal of assuring that NSCC has adequate liquidity resources to meet its settlement obligations notwithstanding the default of any of its Members.

In its critical role as a CCP, NSCC itself between counterparties to financial transactions, thereby reducing the risk faced by its Members and contributing to global financial stability. NSCC's liquidity risk management plays an integral part in NSCC's ability to perform its role as a CCP. Therefore, a reduction of NSCC's liquidity risk would be expected to also reduce systemic risk in the financial system and would promote financial stability by having a positive impact on the safety and soundness of the clearing system.

As a result, NSCC believes the proposed Debt Issuance would be consistent with the objectives and principles of Section 805(b)(1) of the Clearing Supervision Act, which specify the promotion of robust risk management, promotion of safety and soundness, reduction of systemic risks and support of the stability of the broader financial system by, among other things, strengthening the liquidity of systemically important financial market utilities, such as NSCC.

[20] 12 U.S.C. 5464(b)(1).

(ii) Consistency With Rule 17Ad–22(e)(7)(i) and (ii) Under the Act

Section 805(a)(2) of the Clearing Supervision Act authorizes the Commission to prescribe risk management standards for the payment, clearing and settlement activities of designated clearing entities, like NSCC, and financial institutions engaged in designated activities for which the Commission is the supervisory agency or the appropriate financial regulator.[21] The Commission has accordingly adopted risk management standards under Section 805(a)(2) of the Clearing Supervision Act [22] and Section 17A of the Act (''Covered Clearing Agency Standards'').[23] The Covered Clearing Agency Standards require covered clearing agencies to establish, implement, maintain, and enforce written policies and procedures that are reasonably designed to meet certain minimum requirements for their operations and risk management practices on an ongoing basis.[24]

NSCC believes that the proposed Debt Issuance is consistent with Rule 17Ad-22(e)(7)(i) and (ii) of the Covered Clearing Agency Standards for the reasons described below.[25]

Rule 17Ad–22(e)(7)(i) under the Act requires that NSCC establish, implement, maintain and enforce written policies and procedures reasonably designed to maintain sufficient liquid resources at the minimum in all relevant currencies to effect same-day and, where appropriate, intraday and multiday settlement of payment obligations with a high degree of confidence under a wide range of foreseeable stress scenarios that includes, but is not limited to, the default of the participant family that would generate the largest aggregate payment obligation for the covered clearing agency in extreme but plausible market conditions.[26] Rule 17Ad–22(e)(7)(ii) under the Act requires that NSCC establish, implement, maintain and enforce written policies and procedures reasonably designed to hold qualifying liquid resources sufficient to meet the minimum liquidity resource requirement under Rule 17Ad–22(e)(7)(i) in each relevant currency for which NSCC has payment obligations owed to its Members.[27]

[21] 12 U.S.C. 5464(a)(2).

[22] *Id.*

[23] 17 CFR 240.17Ad–22(e).

[24] *Id.*

[25] 17 CFR 240.17Ad–22(e)(7)(i), (ii).

[26] 17 CFR 240.17Ad–22(e)(7)(i).

[27] 17 CFR 240.17Ad–22(e)(7)(ii). For purposes of this Rule, ''qualifying liquid resources'' are defined in Rule 17Ad–22(a)(14) as including, in part, cash held either at the central bank of issue or at creditworthy commercial banks. 17 CFR 240.17Ad–22(a)(14).

As described above, the proposed Debt Issuance would provide NSCC with an additional resource of prefunded default liquidity, which it would use to complete end-of-day settlement in the event of the default of a Member. The proceeds of the Debt Issuance would be cash held by NSCC at either its cash deposit account at the FRBNY or at a creditworthy commercial bank, pursuant to the Clearing Agency Investment Policy.[28] Therefore, the proceeds of the Debt Issuance would be considered a qualifying liquid resource, as defined by Rule 17Ad–22(a)(14).[29] As such, the proposed Debt Issuance would support NSCC's ability to hold sufficient qualifying liquid resources to meet its minimum liquidity resource requirement under Rule 17Ad–22(e)(7)(i).[30]

For these reasons, NSCC believes the proposal would support NSCC's compliance with Rule 17Ad–22(e)(7)(i) and (ii) by providing it with an additional qualifying liquid resource.[31]

III. Date of Effectiveness of the Advance Notice, and Timing for Commission Action

The proposed change may be implemented if the Commission does not object to the proposed change within 60 days of the later of (i) the date that the proposed change was filed with the Commission or (ii) the date that any additional information requested by the Commission is received. The clearing agency shall not implement the proposed change if the Commission has any objection to the proposed change.

The Commission may extend the period for review by an additional 60 days if the proposed change raises novel or complex issues, subject to the Commission providing the clearing agency with prompt written notice of the extension. A proposed change may be implemented in less than 60 days from the date the advance notice is filed, or the date further information requested by the Commission is received, if the Commission notifies the clearing agency in writing that it does not object to the proposed change and authorizes the clearing agency to implement the proposed change on an earlier date, subject to any conditions imposed by the Commission.

The clearing agency shall post notice on its website of proposed changes that are implemented.

[28] *Supra* note 12.

[29] 17 CFR 240.17Ad-22(a)(14).

[30] 17 CFR 240.17Ad–22(e)(7)(i).

[31] 17 CFR 240.17Ad–22(e)(7)(i), (ii).

IV. Solicitation of Comments

Interested persons are invited to submit written data, views and arguments concerning the foregoing, including whether the Advance Notice is consistent with the Clearing Supervision Act. Comments may be submitted by any of the following methods:

Electronic Comments

- Use the Commission's internet comment form (*http://www.sec.gov/rules/sro.shtml*); or
- Send an email to *rule-comments@sec.gov.* Please include File Number SR–NSCC–2019–802 on the subject line.

Paper Comments

- Send paper comments in triplicate to Secretary, Securities and Exchange Commission, 100 F Street NE, Washington, DC 20549.

All submissions should refer to File Number SR–NSCC–2019–802. This file number should be included on the subject line if email is used. To help the Commission process and review your comments more efficiently, please use only one method. The Commission will post all comments on the Commission's internet website (*http://www.sec.gov/rules/sro.shtml*). Copies of the submission, all subsequent amendments, all written statements with respect to the Advance Notice that are filed with the Commission, and all written communications relating to the Advance Notice between the Commission and any person, other than those that may be withheld from the public in accordance with the provisions of 5 U.S.C. 552, will be available for website viewing and printing in the Commission's Public Reference Room, 100 F Street NE, Washington, DC 20549 on official business days between the hours of 10:00 a.m. and 3:00 p.m. Copies of the filing also will be available for inspection and copying at the principal office of NSCC and on DTCC's website (*http://dtcc.com/legal/sec-rule-filings.aspx*). All comments received will be posted without change. Persons submitting comments are cautioned that we do not redact or edit personal identifying information from comment submissions. You should submit only information that you wish to make available publicly. All submissions should refer to File Number SR–NSCC–2019–802 and should be submitted on or before January 29, 2020.

By the Commission.

Jill M. Peterson,

Assistant Secretary.

[FR Doc. 2020–00367 Filed 1–13–20; 8:45 am]

BILLING CODE 8011–01–P

SECURITIES AND EXCHANGE COMMISSION

[Release No. 34–87914; File No. SR–NYSE–2019–62]

Self-Regulatory Organizations; New York Stock Exchange LLC; Order Approving Proposed Rule Change To Amend Article II, Section 2.03 of the Twelfth Amended and Restated Operating Agreement of the Exchange To Remove the Independence Requirement for the Director Elected by Exchange Membership Organizations

January 8, 2020.

Introduction

On November 15, 2019, the New York Stock Exchange LLC (''NYSE'' or ''Exchange'') filed with the Securities and Exchange Commission (''Commission''), pursuant to Section 19(b)(1) of the Securities Exchange Act of 1934 (''Act'') [1] and Rule 19b–4 thereunder,[2] a proposed rule change to amend Article II, Section 2.03 of the Twelfth Amended and Restated Operating Agreement (''Operating Agreement'') of the Exchange to remove the independence requirement for the director elected by Exchange membership organizations, and make additional conforming and non-substantive edits. The proposed rule change was published for comment in the **Federal Register** on November 29, 2019.[3] The Commission received no comment letters on the proposed rule change. This order approves the proposed rule change.

Description of the Proposal

The Exchange proposes to amend Article II, Section 2.03 of the Exchange's Operating Agreement to remove the independence requirement for the director elected by Exchange membership organizations, and make additional conforming and non-substantive edits.

Currently, pursuant to the Operating Agreement, at least twenty percent of the Exchange's board of directors (''Board'') must be composed of persons who are not members of the board of directors of Intercontinental Exchange, Inc. (''ICE''), the Exchange's ultimate parent company, but who qualify as independent under the Exchange's director independence policy (such policy, the ''Independence Policy'', and such directors, the ''Non-Affiliated Directors'').[4] The Non-Affiliated Directors are nominated by the member organizations of the Exchange (''Member Organizations''),[5] through a process set forth in the Operating Agreement.[6]

Under the Independence Policy,[7] a director is not independent—and therefore cannot be a Non-Affiliated Director—if, among other things, the director:

- Or one of his or her immediate family members is, or within the last year was, a Member [8] of the Exchange;
- is, or within the last year was, employed by a Member Organization; [9]
- has within the last year received from any Member Organization more than $100,000 per year in direct compensation, or received from Member Organizations in the aggregate an amount of direct compensation which in any one year is more than 10 percent of the director's annual gross income for such year,[10] or
- is affiliated, directly or indirectly, with a Member Organization.

As the Exchange states, the requirement that Non-Affiliated Directors qualify as independent precludes the Member Organizations from nominating a candidate from among their own numbers or who was recently employed by a Member or Member Organization. Because of this, the Exchange believes, the current requirement limits members' ability to

---

[1] 15 U.S.C. 78s(b)(1).

[2] 17 CFR 240.19b–4.

[3] *See* Securities Exchange Act Release No. 87588 (November 22, 2019), 84 FR 65875 (November 29, 2019) (''Notice'').

[4] *See* Operating Agreement, Article II, Section 2.03(a)(iii).

[5] ''Member Organizations'' includes ''members, allied members and member organizations of the [Exchange].'' *See* Operating Agreement, Article II, Section 2.02 (Rules; Supervision of Member Organizations). As discussed below, the Exchange proposes to amend the definition to delete as obsolete the reference to ''allied members.''

[6] *See id.,* Section 2.03(a)(iii)–(v). Other than to remove the independence requirement, the Exchange does not propose to amend the process for nominating the Non-Affiliated Directors.

[7] The Independence Policy is available at: *https://www.nyse.com/publicdocs/nyse/regulation/nyse/Director_Independence_Policy_of_New_York_Stock_Exchange_LLC.pdf.*

[8] The term ''Member'' is used in the Independence Policy as defined in Section 3(a)(3)(A)(i) of the Exchange Act. *See* 15 U.S.C. 78c(a)(3)(A)(i).

[9] The term ''Member Organization'' is used in the Independence Policy as defined in Section 3(a)(3)(A)(ii), 3(a)(3)(A)(iii), and 3(a)(3)(A)(iv) of the Exchange Act. *See* 15 U.S.C. 78c(a)(3)(A)(ii)–(iv).

[10] Such limitations exclude director and committee fees and pension or other forms of deferred compensation for prior service (provided such compensation is not contingent in any way on continued service).

nominate the individual of their choice. Moreover, the Exchange notes that individuals who are precluded by the independence requirement from serving as Non-Affiliated Directors are the very persons who, by virtue of their work as, with, or in affiliation with a Member Organization, are the most informed about the Member Organizations, their operations, and their concerns.

The Exchange therefore proposes to remove this limitation in its current rules by:

- Amending Section 2.03(a)(i) to delete the requirement that Non-Affiliated Directors qualify as independent under the Independence Policy;
- adding a sentence stating that ''[t]he Non-Affiliated Directors need not be independent, and must meet any status or constituent affiliation qualifications prescribed by the Company and filed with and approved by the Commission; [11] and
- amending the third sentence of the second paragraph of Section 2.03(a)(iv) and fourth sentence of Section 2.03(l) to remove the references to potential petition candidates and current directors qualifying as independent under the Independence Policy.

The Exchange states that the proposed rule change would bring the Operating Agreement into greater conformity with the operating agreement of its affiliate, NYSE American LLC (''NYSE American''), which does not require that the NYSE American Non-Affiliated Directors qualify as independent under the NYSE American Director Independence Policy,[12] and with the bylaws of its affiliates, NYSE Arca, Inc., NYSE Chicago, Inc. and NYSE National, Inc., none of which, according to the Exchange, require that the directors nominated by their trading permit holders be qualified as independent.[13] The Exchange further notes that the governing documents of other self-regulatory organizations, such as the Nasdaq Stock Market LLC [14] and Cboe BYX Exchange, Inc.,[15] do not require that the directors nominated by the membership of the exchange be independent.

The Exchange also proposes to delete the reference to ''allied members'' from the definition of ''Member Organizations'' in Section 2.02. The Exchange states that it no longer has allied members and that therefore the reference is obsolete.[16] Finally, the Exchange proposes to make non-substantive conforming changes to the title, recitals, and signature page of the Operating Agreement, which would become the Thirteenth Amended and Restated Operating Agreement of the Exchange.

III. Discussion and Commission Findings

After careful consideration, the Commission finds that the proposed rule change is consistent with the requirements of the Act [17] and the rules and regulations thereunder applicable to a national securities exchange.[18] In particular, the Commission finds that the proposed rule change is consistent with Section 6(b)(5) of the Act,[19] which requires, among other things, that rules of a national securities exchange be designed to prevent fraudulent and manipulative acts and practices, to promote just and equitable principles of trade, to remove impediments to and perfect the mechanism of a free and open market and a national market system, and, in general, to protect investors and the public interest; and that those rules are not designed to permit unfair discrimination between customers, issuers, brokers, or dealers.

The Commission further finds that the proposed rule change is consistent with Section 6(b)(3) of the Act,[20] which, among other things, requires the rules of a national securities exchange to assure the fair representation of its members in the selection of its directors and administration of its affairs.

As the Exchange notes, the requirement that Non-Affiliated Directors qualify as independent dates to the demutualization of the Exchange, when the Exchange filed with the Commission a proposed new organizational structure that included a requirement that all Board members of the Exchange be independent.[21] Moreover, as the Exchange also notes, the Commission has approved governing documents of other exchanges that do not require the member representatives on their boards to be independent.[22]

Therefore, the Commission believes that it is reasonable for NYSE to eliminate the independence requirement for Non-Affiliated Directors and thereby afford its Member Organizations the same flexibility in selecting directors that need not be independent as exists at other national securities exchanges. The Commission notes that the proposed rule change will enable the Exchange to conform its governing documents with those of its affiliated exchanges, which do not require that directors nominated by the membership be independent.

Based on the foregoing, the Commission finds that the proposed rule change is consistent with the Act.

IV. Conclusion

It is therefore ordered, pursuant to Section 19(b)(2) of the Act,[23] that the proposed rule change (SR–NYSE–2019–62) be, and hereby is, approved.

For the Commission, by the Division of Trading and Markets, pursuant to delegated authority.[24]

Jill M. Peterson,

Assistant Secretary.

[FR Doc. 2020–00348 Filed 1–13–20; 8:45 am]

BILLING CODE 8011–01–P

[11] In tandem with this change, the Exchange also proposes to make a non-substantive amendment to the first sentence of Article III, Section 3.03 to delete the language in that sentence defining the term ''SEC''. Proposed Section 2.03(a)(i), which would appear earlier in the text, would already include such reference.

[12] *See* Notice, *supra* note 3, at 65876 n.16. *See* Twelfth Amended and Restated Operating Agreement of NYSE American LLC (''NYSE American Operating Agreement''), Section 2.03(a) and (l). According to the Exchange, the NYSE American Director Independence Policy is the same as the Exchange's Independence Policy. *See* Securities Exchange Act Release No. 85919 (May 22, 2019), 84 FR 24842 (May 29, 2019) (SR–NYSEAMER–2019–20) (notice of filing and immediate effectiveness of proposed rule change to amend the Independence Policy of the Board of Directors of NYSE American).

[13] *See* Notice, *supra* note 3, at 65876 n.17. *See* Bylaws of NYSE Arca, Inc., Article III, Section 3.02(a) and NYSE Arca Rule 3.2(b)(3)(C)(ii) (Directors Nominated by the Trading Permit Holders); Second Amended and Restated Bylaws of NYSE Chicago, Inc., Article II, Section 2 (General Composition and Term of Office); and Sixth Amended and Restated By-Laws of NYSE National, Inc., Article III, Sections 3.2(a) (General Composition).

[14] *See* Notice, *supra* note 3, at 65876 n.18. *See* Bylaws of the Nasdaq Stock Market LLC, Article I (noting that a ''Member Representative Director may, but is not required to be, an officer, director, employee, or agent of a Nasdaq Member'').

[15] *See* Notice, *supra* note 3, at 65876 n.19. *See* Ninth Amended and Restated Bylaws of Cboe BYX Exchange, Inc., Article III, Sections 3.1 and 3.2.

[16] *See* Notice, supra note 3, at 65876.

[17] 15 U.S.C. 78f.

[18] 15 U.S.C. 78f(b). In approving this proposal, the Commission has considered the proposed rule's impact on efficiency, competition, and capital formation. *See* 15 U.S.C. 78c(f).

[19] 15 U.S.C. 78f(b)(5).

[20] 15 U.S.C. 78f(b)(3).

[21] *See* Securities Exchange Act Release No. 53382 (February 27, 2006), 71 FR 11251 (March 6, 2006) (SR–NYSE–2005–77) (Commission order granting approval of NYSE's business combination with Archipelago Holdings, Inc.).

[22] *See supra* notes 12–15.

[23] 15 U.S.C. 78s(b)(2).

[24] 17 CFR 200.30–3(a)(12).

SECURITIES AND EXCHANGE COMMISSION

[Release No. 34–87907; File No. SR–CTA/CQ–2019–01]

Consolidated Tape Association; Notice of Filing of the Thirtieth Substantive Amendment to the Second Restatement of the CTA Plan and Twenty-Second Substantive Amendment to the Restated CQ Plan

January 8, 2020.

I. Introduction

Pursuant to Section 11A of the Securities Exchange Act of 1934 (''Act''),[1] and Rule 608 of Regulation National Market System (''NMS'') thereunder,[2] notice is hereby given that on July 5, 2019,[3] the Consolidated Tape Association Plan (''CTA Plan'') participants (''Participants'')[4] filed with the Securities and Exchange Commission (''SEC'' or ''Commission'') a proposal to amend the Second Restatement of the CTA Plan and the Restated Consolidated Quotation Plan (''CQ Plan'') (each a ''Plan'' and together with the CTA Plan, the ''Plans'').[5] These amendments represent the Thirtieth Substantive Amendment to the CTA Plan and the Twenty-Second Substantive Amendment to the CQ Plan (''Amendments''). As described in the Amendments, the Participants propose to make mandatory a conflicts of interest disclosure regime that currently is voluntary. Under the current practice, which the Amendments would make mandatory, the Participants,[6] the Processor,[7] the Administrator,[8] and the members of the Advisory Committee[9] (collectively, the ''Disclosing Parties'')[10] provide responses to a set of questions designed to provide transparency regarding potential conflicts of interest of such parties. Each of the Disclosing Parties' responses are then made publicly available on the Plans' website.[11] The Participants state that they believe that publicly providing these responses increases transparency and confidence in the governance of the Plans.[12]

The proposed Amendments have been filed by the Participants pursuant to Rule 608(b)(2) under Regulation NMS.[13] The Commission is publishing this notice to solicit comments from interested persons on the proposed Amendments.

The Commission notes that, contemporaneously with the issuance of this notice, it has issued a notice of proposed order (''Governance Notice'')[14] soliciting public comment on a proposed order that would direct the national securities exchanges and the Financial Industry Regulatory Authority, Inc. (collectively, ''SROs'') to act jointly in developing and filing with the Commission a proposed new single national market system plan, which will replace the existing national market system plans that govern the public dissemination of real-time, consolidated equity market data for national market system stocks (''Equity Data Plans''). The Commission stated in the Governance Notice its view that, among other concerns, conflicts of interest are inherent to the Equity Data Plans' current governance structure because some exchange Participants have a dual role as both an SRO jointly responsible for the operation of the Equity Data Plans and part of a publicly held company that offers proprietary data products. Moreover, an SRO representative on the operating committee may have direct responsibility for some or all of an exchange's proprietary data business.[15]

The Governance Notice solicits public comment on a proposed order that would direct the SROs to include provisions in the New Data Plan (as defined in the Governance Notice) addressing several issues arising from the current governance structure of the Plans, and the proposed order discusses the Commission's view that the new data plan should include a comprehensive conflicts of interest policy.

In addition, contemporaneously with the publication of notice of the Amendments set forth below, the Commission also is publishing a separate proposed amendment from the Plans concerning a confidentiality policy.

II. Text of the Amendment

Set forth below is the entirety of the Amendment submission that the Participants prepared and filed with the Commission, which includes a statement of the purpose and summary of the Amendments, along with the information required by Rules 608(a) and 601(a) under the Act.[16]

A. Statement of the Purpose of the Amendment

1. Background

With Exchanges permitted to offer both proprietary market data products and also acting as Participants in running the public market data stream, potential conflicts of interest are inherent in the structure developed under Regulation NMS. There may be instances in which representatives from the Participants and Advisory Committee members have responsibilities with respect to both proprietary data and Securities Information Processor (''SIP'') data. Drawing on the expertise of persons with such overlapping responsibilities may give rise to potential conflicts of interest, and to address such potential conflicts of interest, the Participants adopted a voluntary conflicts disclosure regime.

After discussion among the Participants and the Advisory Committee at several meetings of the

[1] 15 U.S.C. 78k–1.

[2] 17 CFR 242.608.

[3] *See* Letter from Robert Books, Chair, CTA/CQ Operating Committee to Vanessa Countryman, Secretary, Commission, dated July 3, 2019 (''Transmittal Letter'').

[4] The Participants are the national securities association and national securities exchanges that submit trades and quotes to the Plans and include: Cboe BYX Exchange, Inc., Cboe BZX Exchange, Inc., Cboe EDGA Exchange, Inc., Cboe EDGX Exchange, Inc., Cboe Exchange, Inc., NYSE Chicago, Inc., Financial Industry Regulatory Authority, Inc., The Investors' Exchange LLC, Long-Term Stock Exchange, Inc., Nasdaq BX, Inc., Nasdaq ISE, LLC, Nasdaq PHLX, Inc., The Nasdaq Stock Market LLC, New York Stock Exchange LLC, NYSE American LLC, NYSE Arca, Inc., and NYSE National, Inc. (each a ''Participant'' and collectively, the ''Participants''). Participants are also members of the Plans' Operating Committees.

[5] *See* Securities Exchange Act Release Nos. 10787 (May 10, 1974), 39 FR 17799 (May 20, 1974) (declaring the CTA Plan effective); 15009 (July 28, 1978), 43 FR 34851 (August 7, 1978) (temporarily authorizing the CQ Plan); and 16518 (January 22, 1980), 45 FR 6521 (January 28, 1980) (permanently authorizing the CQ Plan). The most recent restatement of both Plans was in 1995. The CTA Plan, pursuant to which markets collect and disseminate last sale price information for non-NASDAQ listed securities, is a ''transaction reporting plan'' under Rule 601 under the Act, 17 CFR 242.601, and a ''national market system plan'' under Rule 608 under the Act, 17 CFR 242.608. The CQ Plan, pursuant to which markets collect and disseminate bid/ask quotation information for listed securities, is a ''national market system plan'' under Rule 608 under the Act, 17 CFR 242.608.

[6] *See supra* note 4.

[7] The ''Processor'' is charged with collecting, processing and preparing for distribution or publication all Plan information. The Processor of the Plans is the Securities Industry Automation Corporation.

[8] The ''Administrator'' is charged with administering the Plans to include data feed approval, customer communications, contract management, and related functions. The Administrator of the Plans is the New York Stock Exchange LLC.

[9] ''Advisory Committee members'' are individuals who represent particular types of financial services firms or actors in the securities market, and who were selected by Plan participants to be on the Advisory Committee.

[10] A list of the Processor, Administrator, and Advisory Committee members is available at *https://www.ctaplan.com/governance.*

[11] *See https://www.ctaplan.com/governance.*

[12] *See* Transmittal Letter at 1.

[13] 17 CFR 242.608(b)(2).

[14] *See* Securities Exchange Act Release No. 87906 (January 8, 2020).

[15] *Id.* at A–66 to A–67 (footnotes omitted).

[16] *See* 17 CFR 242.608(a)(4) and (a)(5).

Plans' Operating Committee, the Participants believe that a disclosure regime is a pragmatic step to address potential conflicts of interest.

As noted below, the Disclosing Parties have voluntarily provided responses to the disclosure regime questions. The responses are available on the Plans' website. The purpose of the Amendments is to make the disclosures a requirement on a prospective basis instead of relying on voluntary disclosures.

Required Disclosures

As part of the disclosure regime, the Participants propose that the Participants, the Processors, the Administrators, and members of the Advisory Committee respond to questions that are tailored to elicit responses that disclose the potential conflicts of interest.

The Participants propose that the Participants respond to the following questions and instructions:

• Is the Participant's firm for profit or not-for-profit? If the Participant's firm is for profit, is it publicly or privately owned? If privately owned, list any owner with an interest of 5% or more of the Participant, where to the Participant's knowledge, such owner, or any affiliate controlling, controlled by, or under common control with the owner, subscribes, directly or through a third-party vendor, to SIP and/or exchange Proprietary Market Data products.

• Does the Participant firm offer real-time proprietary equity market data that is filed with the SEC (''Proprietary Market Data'')? If yes, does the firm charge a fee for such offerings?

• Provide the names of the representative and any alternative representatives designated by the Participant who are authorized under the Plans to vote on behalf of the Participant. Also provide a narrative description of the representatives' roles within the Participant organization, including the title of each individual as well as any direct responsibilities related to the development, dissemination, sales, or marketing of the Participant's Proprietary Market Data, and the nature of those responsibilities.

The Participants propose that the Processors respond to the following questions and instructions:

• Is the Processor an affiliate of or affiliated with any Participant? If yes, disclose the Participant(s)?

• Provide a narrative description of the functions directly performed by the manager employed by the Processor to provide Processor services to the Plans and the staff that reports to that manager (collectively, the ''Plan Processor'').

• Does the Plan Processor provide any services for any Participant's Proprietary Market Data products or other Plans? If yes, disclose the services the Processor performs and identify which Plans. Does the Plan Processor have any profit or loss responsibility for a Participant's Proprietary Market Data products?

• List the policies and procedures established to safeguard confidential Plan information that is applicable to the Plan Processor.

The Participants propose that the Administrators respond to the following questions and instructions:

• Is the Administrator an affiliate of or affiliated with any Participant? If yes, which Participant?

• Provide a narrative description of the functions directly performed by administrative services manager and the staff that reports to that manager (collectively, the ''Plan Administrator'').

• Does the Plan Administrator provide any services for any Participant's Proprietary Market Data products? If yes, what services? Does the Plan Administrator have any profit or loss responsibility for a Participant's Proprietary Market Data products?

• List the policies and procedures established to safeguard confidential Plan information that is applicable to the Plan Administrator.

The Participants propose that the Members of the Advisory Committee respond to the following questions and instructions:

• Provide the Advisor's title and a brief description of the Advisor's role within the firm.

• Does the Advisor have responsibilities related to the firm's use or procurement of market data?

• Does the Advisor have responsibilities related to the firm's trading or brokerage services?

• Does the Advisor's firm use the SIP? Does the Advisor's firm use exchange Proprietary Market Data products?

• Does the Advisor's firm have an ownership interest of 5% or more in one or more Participants? If yes, list the Participant(s).

• Does the Advisor actively participate in any litigation against the Plans?

The Participants will post the responses to these questions on the Plans' website. If a Disclosing Party has any material changes in its responses, the Disclosing Party must promptly update its disclosures. Additionally, the Disclosing Parties will update the disclosures on an annual basis to reflect any changes. This annual update must be made before the first quarterly session meeting of each calendar year, which is generally held in mid-February.

B. Governing or Constituent Documents

Not applicable.

C. Implementation of Amendment

Each of the Participants has approved the amendments in accordance with Section IV(b) of the CTA Plan and Section IV(c) of the CQ Plan, as applicable. The Participants also received and incorporated feedback from the Advisory Committee in preparing the disclosure requirements.

D. Development and Implementation Phases

The Disclosing Parties have voluntarily completed, and the Participants have posted, responses to the questions outlined above on the Plans' website. The purpose of the amendment, going forward, is to make the disclosures a requirement rather than relying on voluntary disclosures.

E. Analysis of Impact on Competition

The Participants believe that the proposed amendments do not impose any burden on competition that is not necessary or appropriate in furtherance of the purposes of the Act. The Participants, together with the other Disclosing Parties, have determined to implement the disclosure regime described herein. The Participants believe that adopting this disclosure regime is an important step in addressing potential conflicts of interest.

The disclosure regime should increase transparency in the governance of the public market data stream, and consequently, increase confidence in the proper functioning of the Operating Committee.

F. Written Understanding or Agreements Relating to Interpretation of, or Participation in, Plan

Not applicable.

G. Approval by Sponsors in Accordance With Plan

Section IV(c)(i) of the CQ Plan and Section IV(b)(i) of the CTA Plan require the Participants to unanimously approve the amendments proposed herein. They so approved it.

H. Description of Operation of Facility Contemplated by the Proposed Amendment

Not applicable.

I. Terms and Conditions of Access

Not applicable.

J. Method of Determination and Imposition, and Amount of, Fees and Charges

Not applicable.

K. Method and Frequency of Processor Evaluation

Not applicable.

L. Dispute Resolution

Not applicable.

III. Regulation NMS Rule 601(a) (Solely in its Application to the Amendments to the CTA Plan)

A. Equity Securities for Which Transaction Reports Shall Be Required by the Plan

Not applicable.

B. Reporting Requirements

Not applicable.

C. Manner of Collecting, Processing, Sequencing, Making Available and Disseminating Last Sale Information

Not applicable.

D. Manner of Consolidation

Not applicable.

E. Standards and Methods Ensuring Promptness, Accuracy and Completeness of Transaction Reports

Not applicable.

F. Rules and Procedures Addressed to Fraudulent or Manipulative Dissemination

Not applicable.

G. Terms of Access to Transaction Reports

Not applicable.

H. Identification of Marketplace of Execution

Not applicable.

IV. Solicitation of Comments

The Commission seeks comments on the Amendments. Interested persons are invited to submit written data, views, and comments concerning the foregoing, including whether the Amendments are consistent with the Act and the rules thereunder. Among other things, the Commission asks commenters to consider whether the Amendments to the current Plans address the concerns outlined in the Governance Notice or whether they should be further enhanced regarding conflicts of interest in national market system plan governance. Accordingly, the Commission requests comments on matters including, but not limited to, the following:

Proposed Disclosure

1. The text of the Amendments, set forth above, state that: ''With Exchanges permitted to offer both proprietary market data products and also acting as Participants in running the public market data stream, potential conflicts of interest are inherent in the structure developed under Regulation NMS.'' The Amendments further note that ''[t]here may be instances in which representatives from the Participants and Advisory Committee members have responsibilities with respect to both proprietary data and [SIP] data'' and that ''such overlapping responsibilities may give rise to potential conflicts of interest.'' Do commenters believe the proposed Amendments adequately address those potential conflicts? Please provide sufficient detail to support your views, including, to the extent available, actual or possible examples.

2. If commenters do not believe that the proposed Amendments adequately address the potential conflicts of interest arising from the Plans' current governance structure, is that because commenters believe the Amendments are inadequate in any particular way? Or is it because commenters believe that the potential conflicts of interest have not been characterized accurately? If so, in what ways do commenters believe the Amendments fail to describe the current environment and potential conflicts of interest?

3. In their filing, the Participants state that the proposed questions in the disclosure document are tailored to elicit information relevant to assess the extent of an individual's potential conflict of interests with the Plans. Do commenters believe that the questions for Participants, Processors, Administrators, and members of the Advisory Committee are sufficient to elicit information to provide insight into all potential conflicts? Will public availability of the responses increase transparency and confidence in the governance of the Plans? Do commenters believe the proposed disclosures are sufficient or should enhanced disclosures be required? If so, what additional items of disclosure should be required and why? Do commenters believe that additional disclosures should be required for the representatives and alternative representatives of a Participant, Processor, Administrator, or member of the Advisory Committee?

4. In their filing, the Participants state that a disclosure-based regime is a pragmatic step to address potential conflicts of interests. Do commenters agree or disagree with that statement? Do commenters believe that a disclosure-based regime is sufficient to address the potential conflicts that Participants, Processors, Administrators, and members of the Advisory Committee may face in their roles within the Plans?

5. Do commenters think any other types of persons should be required to provide disclosures, such as services providers to the Administrator that provide audit, accounting, or other professional services? As an example, if auditing services are outsourced to a Participant's employer or an affiliate that also is offering proprietary data products to SIP customers and/or conducting audits for those products, should that entity also be required to disclose its conflicts and otherwise be subject to the terms of the conflicts of interest policy, even if it is neither the Administrator nor Processor?

6. Do commenters believe that an alternative approach could better identify and address conflicts of interests among Participants, Processors, Administrators, and the Advisory Committee, as well as auditors? For example, should a disclosure regime be supplemented with certain prohibited conduct or procedural requirements, such as a prohibition on a Participant voting when that Participant has direct business responsibilities related to producing, selling, or managing competing data products? If you believe an alternative approach is appropriate, please provide details on any such alternative approach. Do commenters regard the Plans' ability to identify and protect the confidentiality of competitive information as an important component to the Plans' ability to manage conflicts of interest? If so, how do commenters regard the interaction between these proposed Amendments and the separate proposed Plan amendments to govern treatment of confidential information noted above?

7. Do commenters believe that the proposed disclosure questions for each party are sufficient to identify the specific relationships that may give rise to a conflict under the Plans and related information? Separately, do commenters believe that the proposed questions effectively require all material facts necessary to not only identify the nature of the conflict, but also the effect it may have on the Plans? Should the Amendments require more disclosure of such potential effects or greater details with respect to the disclosures that are made?

8. Do commenters believe that the Plans should require additional public disclosures of any personal, business, or financial interests, and any employment

or other commercial relationships that could materially affect the ability of a party to be impartial regarding actions of the Plans?

9. The Participants propose to continue to post the conflicts of interest disclosures for each party on the Plans' website. Do commenters believe that doing so provides sufficient public notice of potential conflicts? If not, in what other manner should the disclosures be made public? For example, should Participants be required to acknowledge potential conflicts when discussing specific matters at Operating Committee meetings or subcommittee meetings that present a conflict? Should a complete set of the disclosures be included in the materials for each Plan meeting? Is the timing clear with respect to the requirement that a Disclosing Party ''promptly'' update its disclosures, or should the Amendments be more specific? What do commenters consider sufficiently prompt? Within one week? Within 30 days? Some other timeframe?

10. As proposed, the Amendments state that disclosures will be made and updated annually or upon any material change. Do commenters believe that these intervals are sufficient, or should updates be required more frequently such as in advance of scheduled Plan meetings? What constitutes a ''material'' change that should require the filing of an amended disclosure? Please explain.

Proposed Disclosure for Participants

1. Do commenters believe that any individual representing a Participant that is directly involved in the management, development, pricing, or sale of proprietary data products offered to SIP customers should participate in discussions and related Plan votes regarding the pricing of SIP data products? If so, how do commenters believe Participants should address the conflicts their representatives may face in their dual role of pricing and developing SIP data products as well as their own proprietary data products?

2. Do commenters believe that a Participant should be recused from voting when it or an affiliate is competing for a contract to serve as a Processor for the Plans? Why or why not? Are there any other scenarios that present conflicts that should result in a Participant being recused from voting?

3. Do commenters believe recusal on certain Plan action when a potential conflict is present is an appropriate mechanism to address conflicts? If so, under what circumstances? If applicable, do commenters believe that recusal should be mandatory or should it be voluntary? Why or why not?

4. Do commenters believe that Operating Committee members should be permitted to raise the issue of a potential conflict of interest of another Participant for discussion before the Operating Committee, even if the Participant did not itself disclose the potential conflict? Do commenters believe that the Operating Committee should have the ability to take action in response to disclosed or undisclosed conflicts, such as requiring the Participant to recuse itself from a certain discussion or vote on a particular matter? If so, how should the Operating Committee take such action? Should the Participants vote on recusal or should the Participants seek input from the Advisory Committee? Why or why not?

Proposed Disclosures for Processors

1. Do commenters believe that the proposed disclosure questions for Processors are sufficient to identify the specific circumstances in which a Participant is both voting on an Operating Committee and competing to act as Processor for one of the Plans? Do commenters believe that the disclosure questions are tailored to the role that Processors perform and the fact that they are present at Plan meetings but do not vote on Plan matters, or should different or additional disclosure be required for Processors? Separately, do commenters believe that the proposed Processor questions effectively require all material facts necessary to not only identify the nature of the potential conflict, but also the effect it may have on the Plans? Should the Amendments require more disclosure of such potential effects? Should the Amendments elaborate on what ''profit or loss responsibility for a Participant's Proprietary Market Data products'' means in the context of the required disclosures? Alternatively, do commenters believe that the Plans' separately-proposed confidentiality proposal would address some of the potential effects of conflicts of interests if approved?

2. Do commenters have concerns about affiliations between a Plan's Processor and a Participant? If so, do commenters believe the conflicts of interest disclosure is sufficient to address those concerns? Should the Amendments require a description of the nature of the affiliation?

3. Do commenters believe that a Participant or its affiliate that is competing for a contract to serve as a Processor for the Plans should participate in discussions and related Plan votes regarding the selection of the Processor for the Plans? If so, how do commenters believe Participants should address the conflicts they face in their dual role of competing to serve as a Processor while serving as a Participant that participates in the discussion of, and ultimately votes on, selection of the Processor?

Proposed Disclosures for Administrators

1. Do commenters believe that the proposed disclosure questions for Administrators are sufficient to identify the specific interests and employment, commercial or other relationships that may give rise to a conflict under the Plans? Separately, do commenters believe that the proposed Administrator questions effectively require all material facts necessary to not only identify the nature of the conflict, but also the effect it may have on the Plans? Should the Amendments require more disclosure of such potential effects or greater details with respect to the disclosures that are made?

2. To the extent that the Administrator enlists assistance from an auditor or any other professional services subcontractor for any of the Plan(s), and the subcontractor is affiliated with an entity that is involved in the development, pricing, or sale of proprietary data products offered to SIP customers, or is subject to any other conflict, should all of the disclosures and conflicts policies referenced above also be applicable to them? Or do commenters believe that concerns arising from potential conflicts of interest would be more appropriately addressed for a subcontractor if the subcontractor could attest that it is sufficiently walled-off from the proprietary data business of its affiliate?

Proposed Disclosures for Members of the Advisory Committee

1. Do commenters believe that the proposed disclosure questions for Advisory Committee members are sufficient to identify the specific interests and employment, commercial, or other relationships that may give rise to a conflict under the Plans? Separately, do commenters believe that the proposed Advisory Committee members' questions effectively require all material facts necessary to not only identify the nature of the conflict, but also the effect it may have on the Plans? Should the Amendments require more disclosure of such potential effects or greater details with respect to the disclosures that are made? Should the Amendments require Members of the Advisory Committee to identify affiliations with any Disclosing Party, and clarify that both direct and indirect ownership interests in a Participant are subject to disclosure? Is it clear what

''actively participate in any litigation against the Plans'' means, or should the Amendments require additional detail?

2. Do commenters believe that the Plans should require additional public disclosures of any personal, business, commercial, or financial interests, and any employment relationships that could materially affect the ability of the Advisory Committee Member to participate impartially in discussing actions of the Plans? Please explain.

3. Do commenters believe that Advisory Committee members that purchase SIP data products should participate in discussions regarding the pricing of SIP data products? If so, how do commenters believe Advisory Committee members should address that potential conflict?

Participant Statement Regarding Competition

1. The Participants state in their filing that the Amendments do not impose any burden on competition that is not necessary or appropriate in furtherance of the purposes of the Act. Do commenters believe that the Amendments to the Plans impose any burden on competition that is not necessary or appropriate in furtherance of the purposes of the Act?

2. What effect might the Amendments have on competition, if any? Please explain. How would any effect on competition from the proposal benefit or harm the national market system and/or various market participants? Please describe and explain how, if at all, aspects of the national market system or different market participants would be affected. Please support any response with data, if possible.

Comments may be submitted by any of the following methods:

Electronic Comments

- Use the Commission's internet comment form (*http://www.sec.gov/rules/sro.shtml*); or
- Send an email to *rule-comments@sec.gov.* Please include File Number SR–CTA/CQ–2019–01 on the subject line.

Paper Comments

- Send paper comments in triplicate to Secretary, Securities and Exchange Commission, 100 F Street NE, Washington, DC 20549–1090.

All submissions should refer to File Number SR–CTA/CQ–2019–01. This file number should be included on the subject line if email is used. To help the Commission process and review your comments more efficiently, please use only one method. The Commission will post all comments on the Commission's website (*http://www.sec.gov/rules/sro.shtml*). Copies of the submission, all written statements with respect to the proposed Amendments that are filed with the Commission, and all written communications relating to the proposed Amendments between the Commission and any person, other than those that may be withheld from the public in accordance with the provisions of 5 U.S.C. 552, will be available for website viewing and printing in the Commission's Public Reference Room, 100 F Street NE, Washington, DC 20549, on official business days between the hours of 10:00 a.m. and 3:00 p.m. Copies of the filing also will be available for website viewing and printing at the principal office of the Plans. All comments received will be posted without change. Persons submitting comments are cautioned that we do not redact or edit personal identifying information from comment submissions. You should submit only information that you wish to make available publicly. All submissions should refer to File Number SR–CTA/CQ–2019–01 and should be submitted on or before February 4, 2020.

By the Commission.

Vanessa A. Countryman,

Secretary.

[FR Doc. 2020–00363 Filed 1–13–20; 8:45 am]

BILLING CODE 8011–01–P

SECURITIES AND EXCHANGE COMMISSION

[Release No. 34–87911; File No. SR–NSCC–2019–801]

Self-Regulatory Organizations; National Securities Clearing Corporation; Notice of Filing of Advance Notice To Enhance National Securities Clearing Corporation's Haircut-Based Volatility Charge Applicable to Municipal Bonds

January 8, 2020.

Pursuant to Section 806(e)(1) of Title VIII of the Dodd-Frank Wall Street Reform and Consumer Protection Act entitled the Payment, Clearing, and Settlement Supervision Act of 2010 (''Clearing Supervision Act'') [1] and Rule 19b–4(n)(1)(i) under the Securities Exchange Act of 1934 (''Act''),[2] notice is hereby given that on December 13, 2019, National Securities Clearing Corporation (''NSCC'') filed with the Securities and Exchange Commission (''Commission'') the advance notice SR–NSCC–2019–801 (''Advance Notice'') as described in Items I, II and III below, which Items have been prepared by the clearing agency.[3] The Commission is publishing this notice to solicit comments on the Advance Notice from interested persons.

I. Clearing Agency's Statement of the Terms of Substance of the Advance Notice

This Advance Notice consists of amendments to NSCC's Rules & Procedures (''Rules'') [4] in order to enhance NSCC's haircut-based volatility charge applicable to municipal bonds (the ''Bond Haircut''). References to the Bond Haircut in this document refer only to that charge as applied to municipal bonds. The proposed changes are described in greater detail below.

II. Clearing Agency's Statement of the Purpose of, and Statutory Basis for, the Advance Notice

In its filing with the Commission, the clearing agency included statements concerning the purpose of and basis for the Advance Notice and discussed any comments it received on the Advance Notice. The text of these statements may be examined at the places specified in Item IV below. The clearing agency has prepared summaries, set forth in sections A and B below, of the most significant aspects of such statements.

(A) Clearing Agency's Statement on Comments on the Advance Notice Received From Members, Participants, or Others

NSCC has not received or solicited any written comments relating to this proposal. NSCC will notify the Commission of any written comments received by NSCC.

(B) Advance Notice Filed Pursuant to Section 806(e) of the Clearing Supervision Act

Description of Proposed Changes

NSCC is proposing a number of enhancements to NSCC's Bond Haircut, as described in greater detail below.

The Required Fund Deposit and the Bond Haircut

As part of its market risk management strategy, NSCC manages its credit exposure to Members by determining

[1] 12 U.S.C. 5465(e)(1).

[2] 17 CFR 240.19b–4(n)(1)(i).

[3] On December13, 2019, NSCC filed this Advance Notice as a proposed rule change (SR–NSCC–2019–004) with the Commission pursuant to Section 19(b)(1) of the Act, 15 U.S.C. 78s(b)(1), and Rule 19b–4 thereunder, 17 CFR 240.19b–4. A copy of the proposed rule change is *available at http://www.dtcc.com/legal/sec-rule-filings.aspx.*

[4] Capitalized terms not defined herein are defined in the Rules, *available at http://dtcc.com/~/media/Files/Downloads/legal/rules/nscc_rules.pdf.*

the appropriate Required Fund Deposit for each Member and monitoring its sufficiency, as provided for in the Rules.[5] The Required Fund Deposit serves as each Member's margin. The objective of a Member's Required Fund Deposit is to mitigate potential losses to NSCC associated with liquidation of the Member's portfolio in the event NSCC ceases to act for that Member (hereinafter referred to as a ''default'').[6] The aggregate of all Members' Required Fund Deposits, together with certain other deposits required under the Rules, constitute the Clearing Fund of NSCC, which it would access should a defaulting Member's own Required Fund Deposit be insufficient to satisfy losses to NSCC caused by the liquidation of that Member's portfolio.

Pursuant to the Rules, each Member's Required Fund Deposit amount consists of a number of applicable components, each of which is calculated to address specific risks faced by NSCC, as identified within Procedure XV.[7] Generally, the largest component of Members' Required Fund Deposits is the volatility component. The volatility component is designed to calculate the amount of money that could be lost on a portfolio over a given period of time assumed necessary to liquidate the portfolio, within a 99% confidence level.

NSCC has two methodologies for calculating the volatility component. For the majority of Net Unsettled Positions,[8] NSCC calculates the volatility component as the greater of (1) the larger of two separate calculations that utilize a parametric Value at Risk (''VaR'') model, (2) a gap risk measure calculation based on the largest non-index position in a portfolio that exceeds a concentration threshold, and (3) a portfolio margin floor calculation based on the market values of the long and short positions in the portfolio (''VaR Charge'').[9] Pursuant to Sections I(A)(1)(a)(ii) and I(A)(2)(a)(ii) of Procedure XV, certain positions in certain classes of securities, including municipal bonds, are excluded from the calculation of the VaR Charge and are instead charged a haircut-based volatility component that is calculated by multiplying the absolute value of such positions by a percentage designated by NSCC which shall not be less than 2%.[10]

Existing Municipal Bond Haircut Methodology

The existing methodology for calculating the Bond Haircut is described in Sections I(A)(1)(a)(iii)(B) and I(A)(2)(a)(iii)(B) of Procedure XV.[11] In order to determine the current Bond Haircut, municipal bonds are categorized into tenor-based groups (*i.e.,* based on remaining time to maturity) and separately categorized by municipal sector. Sections I(A)(1)(a)(iii)(B) and I(A)(2)(a)(iii)(B) of Procedure XV provide that NSCC shall establish a percentage applicable to each tenor-based group and pursuant to those sections NSCC has established a percentage (which is not less than 2%) for each tenor-based group which is used to calculate the haircut-based charge applicable to that group.[12] For municipal bonds rated higher than BBB+, NSCC has established a tenor-based haircut for each tenor-based group. For example, a municipal bond rated above BBB+ with 3 years to maturity and $10MM short position, will be subject to the 2–5 years tenor-based group haircut (5%) which will be applied to the absolute market value of the positions resulting in $500K haircut-based charge.

Sections I(A)(1)(a)(iii)(B) and I(A)(2)(a)(iii)(B) of Procedure XV provide that NSCC shall assign each municipal sector a risk factor.[13] For municipal bonds rated lower than a pre-determined threshold, which shall be no lower than BBB+, and non-rated municipal bonds, NSCC has established a percentage based on a sector-based risk factor which is also applied to the tenor-based haircut. For example, a municipal bond in the healthcare sector, rated BBB+ or lower with 3 years to maturity and $10MM short position, will be subject to the 2–5 years tenor-based group haircut (5%) multiplied by the sector-based factor (1.2), resulting in 6% haircut-based charge of $600K. This additional sector-based risk factor is added because variable risk factors exist between municipal sectors based on the various industries in which the bonds are issued and the source of repayment for the bonds. For instance, general obligation bonds are typically backed by the taxing power of their issuer and repaid from general taxes whereas transportation or healthcare-related bonds may be repaid from funds from a specific project based on the revenues of the project. Such risk factor is based on the sector index's spread to a benchmark index.[14] NSCC uses a vendor to match bonds to particular sectors. If a municipal bond does not fit within any particular sector, the highest sector-based risk factor is applied to such municipal bond. Currently, the highest sector-based risk factor is 2.6 used for bonds in the housing sector.

Enhancements to Municipal Bond Haircut Methodology

NSCC regularly assesses its market and liquidity risks, as such risks are related to its margining methodologies, to evaluate whether margin levels are commensurate with the particular risk attributes of each relevant product, portfolio, and market. In connection with such regular reviews, NSCC has determined based on impact studies that, under current market conditions, the current margin levels with respect to municipal bonds using the current methodology exceed the levels necessary to offset the risks with respect to these securities. Based on impact studies, NSCC has determined that changes to its current methodology for municipal bonds would result in margin levels that are lower and more commensurate with the risk attributes of those securities. In particular, as described below, NSCC is proposing to replace the municipal sector-based risk factor for lower rated municipal bonds with a percentage derived using the historical returns of applicable benchmark indices.

NSCC is proposing the following enhancements to the methodology used for calculating the Bond Haircut.

First, NSCC is proposing to re-calibrate the Bond Haircut not less frequently than annually. Sections I(A)(1)(a)(iii)(B) and I(A)(2)(a)(iii)(B) of

[5] *See* Rule 4 (Clearing Fund) and Procedure XV (Clearing Fund Formula and Other Matters) of the Rules (''Procedure XV''), *supra* note 4. NSCC's market risk management strategy is designed to comply with Rule 17Ad–22(e)(4) under the Act, where these risks are referred to as ''credit risks.'' 17 CFR 240.17Ad–22(e)(4).

[6] The Rules identify when NSCC may cease to act for a Member and the types of actions NSCC may take. For example, NSCC may suspend a firm's membership with NSCC or prohibit or limit a Member's access to NSCC's services in the event that Member defaults on a financial or other obligation to NSCC. *See* Rule 46 (Restrictions on Access to Services) of the Rules, *supra* note 4.

[7] Procedure XV, *supra* note 4.

[8] ''Net Unsettled Positions'' and ''Net Balance Order Unsettled Positions'' refer to net positions that have not yet passed their settlement date, or did not settle on their settlement date, and are referred to collectively in this filing as Net Unsettled Positions. NSCC does not take into account any offsets, such as inventory held at other clearing agencies, when determining Net Unsettled Positions for the purpose of calculating the volatility component. *See* Procedure XV, *supra* note 4.

[9] Sections I(A)(1)(a)(i) and I(A)(2)(a)(i) of Procedure XV, *supra* note 4.

[10] Sections I(A)(1)(a)(ii) and I(A)(2)(a)(ii) of Procedure XV, *supra* note 4.

[11] Sections I(A)(1)(a)(iii)(B) and I(A)(2)(a)(iii)(B) of Procedure XV, *supra* note 4.

[12] *Id.*

[13] *Id.*

[14] The ''spread'' is the difference in the yield curve of the sector index to the yield curve of a benchmark index which is indicative of the added risk presented by the sector.

Procedure XV currently provide that each municipal sector is assigned a risk factor no less frequently than annually.[15] As discussed above and below, the enhanced methodology for calculating Bond Haircuts would no longer include the straight risk factor by sector. The re-calibration of the Bond Haircut not less frequently than annually would replace the assignment of a straight risk factor no less frequently than annually. NSCC believes that the periodic re-calibration would help ensure that NSCC is reviewing the Bond Haircut with enough regularity to ensure that the margin levels are commensurate with the particular risk attributes of municipal bonds.

While the proposed rule change would provide that NSCC would re-calibrate not less frequently than annually, NSCC would initially re-calibrate the Bond Haircut on a quarterly basis. NSCC could change how often it recalibrates from time to time based on its regular review of margining methodologies; provided, that it would recalibrate not less frequently than annually pursuant to the proposed rule change. Changes to the frequency of calibration would be subject to NSCC's risk management practices which would require, among other things, approval by the DTCC Model Risk Governance Committee (''MRGC'').[16]

Second, municipal bonds would be grouped into tenor-based groups and by credit rating, and municipal bonds that are rated BBB+ or lower, or that are not rated, would also be separately categorized by municipal sector. NSCC would then establish a percentage haircut for each group based on the (1) the historical returns of applicable benchmark indices, such as tenor-based indices (*i.e.,* based on time to maturity), municipal bond sector-based indices, and high-yield indices; (2) a pre-determined look-back period, which shall not be shorter than 10 years; and (3) a pre-determined calibration percentile, which shall not be less than 99%.

For municipal bonds that are rated higher than BBB+, NSCC is proposing to use a tenor-based index (*i.e.,* based on time to maturity) as the applicable benchmark index. While the proposed rule change would provide that NSCC would base such percentage for bonds that are rated higher than BBB+ on historical returns of applicable benchmark indices, such as tenor-based indices (*i.e.,* based on time to maturity), municipal bond sector-based indices, and high-yield indices; NSCC would initially base the percentage derived from a benchmark municipal tenor-based index over a 3-day price return from the index. NSCC could change which applicable benchmark indices it uses and the applicable period for the price return used in the calculation from time to time based on its regular review of margining methodologies. Changes to the frequency of calibration would be subject to NSCC's risk management practices which would require, among other things, approval by the MRGC.[17]

For municipal bonds that are rated BBB+ or lower, or are not rated, NSCC is proposing to use a percentage derived from the maximum of the applicable tenor-based index, municipal bond sector-based indices and a high-yield index. Rather than multiply the tenor-based haircut by a straight risk factor for each municipal sector, as is done under the current methodology, the Bond Haircut for these lower rated or non-rated municipal bonds would be determined by using the maximum percent derived from either the applicable tenor-based index, the municipal bond sector-based indices or a high yield index. The enhancement would account for risks represented by the tenor, sector and high-yield characteristics that may be presented by these municipal bonds by using the maximum percent that is derived from either a tenor-based index, sector-based indices or a high yield index, rather than addressing these risks by multiplying the percent derived from a tenor-based index by a straight sector-based risk factor. Based on analysis of the impact studies, NSCC believes that the use of a risk factor based on the tenor-based index, municipal bond sector-based indices and a high-yield index would result in lower margins with respect to these securities that are sufficient to offset the risks with respect to these securities.

While the proposed rule change would provide that NSCC would base such percentage on historical returns of applicable benchmark indices, such as tenor-based indices (*i.e.,* based on time to maturity), municipal bond sector-based indices, and high-yield indices; NSCC would initially base the percentage derived from a tenor-based index, municipal bond sector-based indices and a high-yield index over a 3-day price return from the indices. NSCC could change which applicable benchmark indices it uses and the applicable period for the price return used in the calculation from time to time based on its regular review of margining methodologies in accordance with its risk management practices which would require, among other things, approval by the MRGC.[18]

In extraordinary circumstances, a certain municipality or issuer may present unique risks beyond the calibrated tenor, sector and high-yield factors. For example, the market price risk for issues of a municipality facing technical default following a natural disaster may not be fully captured due to the liquidity profile of municipal securities. Therefore, NSCC would reserve the right to apply the highest haircut of all municipal bonds to a specific issuer in such instances. NSCC would apply the highest haircut in accordance with its risk management practices, including approval by an officer of NSCC in the risk management department, following a review of the circumstances facing the municipality and a finding that the market price movement raises risks that are not accounted for by the Bond Haircut methodology.

Finally, the recalibration of the Bond Haircut would apply a pre-determined look-back period. NSCC would initially apply a look-back period of a 10-year rolling window plus a one calendar year ''worst case scenario'' stress period. NSCC believes this look-back period is appropriate because it would capture relevant data and is adequate to cover enough market activity, while not diluting the ''tail'' with an abundance of data.[19]

While the proposed rule change would provide that NSCC would apply a pre-determined look-back period, which shall not be shorter than 10 years, NSCC would initially apply a look-back period of a 10-year rolling window plus a one calendar year ''worst case scenario'' stress period. NSCC could

[15] Sections I(A)(1)(a)(iii)(B) and I(A)(2)(a)(iii)(B) of Procedure XV, *supra* note 4.

[16] *See* Securities Exchange Act Release No. 81485 (August 25, 2017), 82 FR 41433 (August 31, 2017) (File No. SR–NSCC–2017–008) (describes the adoption of the Clearing Agency Model Risk Management Framework (''Model Risk Management Framework'') of NSCC which sets forth the model risk management practices of NSCC) and Securities Exchange Act Release No. 84458 (October 19, 2018), 83 FR 53925 (October 25, 2018) (File No. SR–NSCC–2018–009) (amends the Model Risk Management Framework). The Model Risk Management Framework describes the model management practices adopted by NSCC, which have been designed to assist NSCC in identifying, measuring, monitoring, and managing the risks associated with the design, development, implementation, use, and validation of ''models'' which would include the methodology for the Bond Haircut. *Id.*

[17] *See* note 16.

[18] *See* note 16.

[19] NSCC believes that a 10-year window with a one-year stress period is typically long enough to capture at least two recent market cycles. NSCC believes that data over a longer period will ''flatten'' out the results because recent volatile periods will be offset by non-volatile periods, making the more recent volatility appear less significant.

change the look-back period from time to time based on its regular review of margining methodologies in accordance with its risk management practices which would require, among other things, approval by the MRGC.[20]

Proposed Rule Changes to Procedure XV

In order to implement the proposed enhancements to the Bond Haircut methodology described above, Sections I(A)(1)(a)(iii)(B) and I(A)(2)(a)(iii)(B) of Procedure XV would be revised to provide that: (i) Municipal bonds would be grouped by both ''remaining time to maturity'' and credit rating, and municipal bonds that are BBB+ or lower, or that are not rated, would be separately categorized by municipal sector, (ii) NSCC would establish the Bond Haircut percentages no less frequently than annually, (iii) the Bond Haircut percentage to be applied to municipal bonds would apply to each grouping of municipal bonds and (iv) the Bond Haircut percentage to be applied to municipal bonds would be based on (1) the historical returns of applicable benchmark indices, such as tenor-based indices (*i.e.,* based on time to maturity), municipal bond sector-based indices, and high-yield indices; (2) a pre-determined look-back period; and (3) a pre-determined calibration percentile, which shall not be less than 99%. In addition, Sections I(A)(1)(a)(iii)(B) and I(A)(2)(a)(iii)(B) of Procedure XV would be revised to remove the references to the municipal sector factor and the current application of the municipal sector factor in the last four sentences in Sections I(A)(1)(a)(iii)(B) and I(A)(2)(a)(iii)(B) of Procedure XV. A sentence would also be added to Sections I(A)(1)(a)(iii)(B) and I(A)(2)(a)(iii)(B) of Procedure XV to provide that in extraordinary circumstances where NSCC determines that a certain municipality or issuer of municipal bonds presents unique risks that are not captured by the grouping set forth in those subsections, NSCC may, in its discretion, apply the highest percentage being applied to any municipal bond group pursuant to those subsections to municipal bonds issued by such municipality or issuer.

Expected Effect on and Management of Risk

NSCC believes that the proposed changes to enhance the Bond Haircut would enable NSCC to better limit its risk exposures to Members arising out of their Net Unsettled Positions.

First, the proposal to enhance the methodology for determining the Bond Haircut would improve NSCC's ability to limit its risk exposures posed by Net Unsettled Positions in these municipal bonds by allowing it to (1) better identify the risks with respect to municipal bonds, and (2) calculate a volatility margin component that is appropriate for those risks.

Second, the proposal to re-calibrate the Bond Haircut no less frequently than annually, to calibrate the percent to a pre-determined percentile that would be not be less than 99% and to apply a pre-determined look back period would ensure that the Bond Haircut continues to accurately measure the risks presented by municipal bonds and to better limit its credit exposures posed by municipal bonds. The proposal would more appropriately address the risks presented by a Net Unsettled Position in municipal bonds by applying a calculation that more accurately measures the risks when determining the Bond Haircut to be used in that calculation. Therefore, by enabling NSCC to calculate and collect margin that more accurately reflects the risk characteristics of municipal bonds, these proposals would enhance NSCC's risk management capabilities.

By providing NSCC with a more effective measurement of its exposures, as described above, the proposed change would also mitigate risk for Members because lowering the risk profile for NSCC would in turn lower the risk exposure that Members may have with respect to NSCC in its role as a central counterparty.

Consistency With the Clearing Supervision Act

Although the Clearing Supervision Act does not specify a standard of review for an advance notice, its stated purpose is instructive: To mitigate systemic risk in the financial system and promote financial stability by, among other things, promoting uniform risk management standards for systemically important financial market utilities and strengthening the liquidity of systemically important financial market utilities.[21]

Section 805(a)(2) of the Clearing Supervision Act[22] authorizes the Commission to prescribe risk management standards for the payment, clearing and settlement activities of designated clearing entities, like NSCC, and financial institutions engaged in designated activities for which the Commission is the supervisory agency or the appropriate financial regulator. Section 805(b) of the Clearing Supervision Act[23] states that the objectives and principles for the risk management standards prescribed under Section 805(a) shall be to, among other things, promote robust risk management, promote safety and soundness, reduce systemic risks, and support the stability of the broader financial system. The Commission has adopted risk management standards under Section 805(a)(2) of the Clearing Supervision Act[24] and Section 17A of the Exchange Act (''Covered Clearing Agency Standards'').[25] The Covered Clearing Agency Standards require registered clearing agencies to establish, implement, maintain, and enforce written policies and procedures that are reasonably designed to meet certain minimum requirements for their operations and risk management practices on an ongoing basis.[26]

(i) Consistency With Section 805(b) of the Clearing Supervision Act

For the reasons described below, NSCC believes that the proposed changes in this advance notice are consistent with the objectives and principles of these risk management standards as described in Section 805(b) of the Clearing Supervision Act and in the Covered Clearing Agency Standards.

As discussed above, NSCC is proposing changes to the way it calculates the volatility component of the Clearing Fund as applied to Net Unsettled Positions in municipal bonds. The volatility charge is one of the components of its Members' Required Fund Deposits—a key tool that NSCC uses to mitigate potential losses to NSCC associated with liquidating a Member's portfolio in the event of Member default. NSCC believes the proposed changes are consistent with promoting robust risk management because they are designed to enable NSCC to better limit its exposure to Members in the event of a Member default.

First, NSCC's proposal to re-calibrate the Bond Haircut no less frequently than annually, to calibrate the percent to a pre-determined percentile that would be not be less than 99% and to apply a pre-determined look back period would better enable NSCC to limit its exposures to Net Unsettled Positions in municipal bonds. Second, the proposal to apply a risk factor based on a tenor-based index, municipal bond sector-based indices and a high-yield index for lower rated or non-rated municipal

[20] *See* note 16.

[21] *See* 12 U.S.C. 5461(b).

[22] 12 U.S.C. 5464(a)(2).

[23] 12 U.S.C. 5464(b).

[24] 12 U.S.C. 5464(a)(2).

[25] *See* 17 CFR 240.17Ad–22(e).

[26] *Id.*

bonds rather than a straight sector-based risk factor would better enable NSCC to limit its exposures to Members by basing this calculation on a more accurate measure of the risks relating to municipal bonds.

Furthermore, NSCC believes that the changes proposed in this advance notice are consistent with promoting safety and soundness, which, in turn, is consistent with reducing systemic risks and supporting the stability of the broader financial system, consistent with Section 805(b) of the Clearing Supervision Act.[27] The proposed changes are designed to better limit NSCC's exposures to Members in the event of Member default. As discussed above, the proposed enhancements to the Bond Haircut are designed to more accurately calculate the necessary margin relating to municipal bonds and would allow NSCC to limit its exposure to Members by applying a volatility component that is a more appropriate measure of volatility for Net Unsettled Positions in municipal bonds. The proposed enhancements to the Bond Haircut would allow NSCC to collect margin at levels that reflect the risk presented by Net Unsettled Positions in municipal bonds and would help NSCC limit its exposures to Members.

By better limiting NSCC's exposures to Members in the event of a Member default, the proposed changes are consistent with promoting safety and soundness, which, in turn, is consistent with reducing systemic risks and supporting the stability of the broader financial system.

(ii) Consistency With Rule 17Ad–22(e)(4)(i) and (e)(6)(i) and (v) Under the Act

NSCC believes that the proposed changes are consistent with Rule 17Ad–22(e)(4)(i) and (e)(6)(i) and (v), each promulgated under the Act.[28]

Rule 17Ad–22(e)(4)(i) under the Act[29] requires that NSCC establish, implement, maintain and enforce written policies and procedures reasonably designed to effectively identify, measure, monitor, and manage its credit exposures to participants and those arising from its payment, clearing, and settlement processes, including by maintaining sufficient financial resources to cover its credit exposure to each participant fully with a high degree of confidence.

As described above, NSCC believes that the proposed changes would help enable it to better identify, measure, monitor, and, through the collection of Members' Required Fund Deposits, manage its credit exposures to Members by maintaining sufficient resources to cover those credit exposures fully with a high degree of confidence. More specifically, the proposed changes to the methodology for Bond Haircuts to apply a risk factor based on multiple benchmark indices for lower rated or non-rated municipal bonds rather than a straight risk factor by sector would help allow NSCC to more accurately identify the credit exposure relating to Net Unsettled Positions in municipal bonds for purposes of applying an appropriate margin charge and to help provide NSCC with a more effective measure of the risks that may be presented to NSCC by positions in the securities. The proposed changes to (i) re-calibrate the Bond Haircut no less frequently than annually, (ii) calibrate the percent to a pre-determined percentile that would not be less than 99% level, and (iii) apply a pre-determined look-back period would enable NSCC to apply the proposed enhanced methodology discussed above and to better monitor its credit exposure relating to Net Unsettled Positions in municipal bonds. By providing that NSCC would be required to re-calibrate the Bond Haircut no less frequently than annually, the proposed rule change would help ensure that NSCC would periodically review the Bond Haircut to ensure that it continued to accurately reflect the risks presented by municipal bonds. Finally, by reserving the right to apply the highest group factor in extraordinary circumstances, NSCC would help protect itself in circumstances where the assigned factor does not adequately account for risks presented by extraordinary events, such as natural disasters.

Based on backtesting results in which the proposed methodology was applied, NSCC believes that the proposed changes would help allow it to collect Required Fund Deposits that are more accurate to offset the risks presented by municipal bonds and provide a better method of managing risks presented by those securities. Therefore, NSCC believes that the proposed changes would help enhance NSCC's ability to effectively identify, measure, monitor and manage its credit exposures and would help enhance its ability to maintain sufficient financial resources to cover its credit exposure to each participant fully with a high degree of confidence. As such, NSCC believes the proposed changes are consistent with Rule 17Ad–22(e)(4)(i) under the Act.[30]

Rule 17Ad–22(e)(6)(i) under the Act[31] requires that NSCC establish, implement, maintain and enforce written policies and procedures reasonably designed to cover its credit exposures to its participants by establishing a risk-based margin system that, at a minimum, considers, and produces margin levels commensurate with, the risks and particular attributes of each relevant product, portfolio, and market.

The Required Fund Deposit is made up of risk-based components (as margin) that are calculated and assessed daily to limit NSCC's credit exposures to Members. NSCC is proposing changes that are designed to more effectively address risk characteristics of Net Unsettled Positions in municipal bonds by capturing risks more accurately by applying multiple indices. Rather than multiply the tenor-based haircut for lower rated bonds by a straight risk factor for each municipal sector, the Bond Haircut for lower rated or non-rated municipal bonds would be determined by using the maximum percent derived from either the tenor-based index, the municipal bond sector-based indices or a high yield index. Based on backtesting results, NSCC believes that deriving the percent using a maximum of the indices more accurately captures the risk of such municipal bonds that may be presented by tenor, sector and the higher yield of these securities compared to the present use of a straight sector-based risk factor. Based on such results, NSCC believes that these changes would help enable NSCC to produce margin levels that are more commensurate with the particular risk attributes of these securities. These proposed changes are designed to assist NSCC in maintaining a risk-based margin system that considers, and produces margin levels commensurate with, the risks and particular attributes of portfolios relating to municipal bonds, including risks and attributes related to tenor, municipal sector and higher yields. Therefore, NSCC believes the proposed change is consistent with Rule 17Ad–22(e)(6)(i) under the Act.[32]

Rule 17Ad–22(e)(6)(v) under the Act[33] requires that NSCC establish, implement, maintain and enforce written policies and procedures reasonably designed to cover its credit exposures to its participants by establishing a risk-based margin system

[27] 12 U.S.C. 5464(b).

[28] 17 CFR 240.17Ad–22(e)(4)(i) and (e)(6)(i) and (v).

[29] 17 CFR 240.17Ad–22(e)(4)(i).

[30] *Id.*

[31] 17 CFR 240.17Ad–22(e)(6)(i).

[32] *Id.*

[33] 17 CFR 240.17Ad–22(e)(6)(v).

that, at a minimum, uses an appropriate method for measuring credit exposure that accounts for relevant product risk factors and portfolio effects across products. NSCC is proposing to enhance the Bond Haircut because NSCC believes that the proposed methodology would help provide NSCC with a more effective measure of the credit exposure presented by municipal bonds. In particular, as described above, NSCC believes that the enhancements would result in a more effective measure of the tenor, sector and higher yield risks presented by municipal bonds that are rated BBB+ or lower, or are not rated. Therefore, NSCC believes the proposed change is consistent with Rule 17Ad–22(e)(6)(v) under the Act.[34]

III. Date of Effectiveness of the Advance Notice, and Timing for Commission Action

The proposed change may be implemented if the Commission does not object to the proposed change within 60 days of the later of (i) the date that the proposed change was filed with the Commission or (ii) the date that any additional information requested by the Commission is received. The clearing agency shall not implement the proposed change if the Commission has any objection to the proposed change.

The Commission may extend the period for review by an additional 60 days if the proposed change raises novel or complex issues, subject to the Commission providing the clearing agency with prompt written notice of the extension. A proposed change may be implemented in less than 60 days from the date the advance notice is filed, or the date further information requested by the Commission is received, if the Commission notifies the clearing agency in writing that it does not object to the proposed change and authorizes the clearing agency to implement the proposed change on an earlier date, subject to any conditions imposed by the Commission.

The clearing agency shall post notice on its website of proposed changes that are implemented.

The proposal shall not take effect until all regulatory actions required with respect to the proposal are completed.

IV. Solicitation of Comments

Interested persons are invited to submit written data, views and arguments concerning the foregoing, including whether the Advance Notice is consistent with the Clearing Supervision Act. Comments may be submitted by any of the following methods:

Electronic Comments

- Use the Commission's internet comment form (*http://www.sec.gov/rules/sro.shtml*); or
- Send an email to *rule-comments@sec.gov.* Please include File Number SR–NSCC–2019–801 on the subject line.

Paper Comments

- Send paper comments in triplicate to Secretary, Securities and Exchange Commission, 100 F Street NE, Washington, DC 20549.

All submissions should refer to File Number SR–NSCC–2019–801. This file number should be included on the subject line if email is used. To help the Commission process and review your comments more efficiently, please use only one method. The Commission will post all comments on the Commission's internet website (*http://www.sec.gov/rules/sro.shtml*). Copies of the submission, all subsequent amendments, all written statements with respect to the Advance Notice that are filed with the Commission, and all written communications relating to the Advance Notice between the Commission and any person, other than those that may be withheld from the public in accordance with the provisions of 5 U.S.C. 552, will be available for website viewing and printing in the Commission's Public Reference Room, 100 F Street NE, Washington, DC 20549 on official business days between the hours of 10:00 a.m. and 3:00 p.m. Copies of the filing also will be available for inspection and copying at the principal office of NSCC and on DTCC's website (*http://dtcc.com/legal/sec-rule-filings.aspx*). All comments received will be posted without change. Persons submitting comments are cautioned that we do not redact or edit personal identifying information from comment submissions. You should submit only information that you wish to make available publicly. All submissions should refer to File Number SR–NSCC–2019–801 and should be submitted on or before January 29, 2020.

By the Commission.

Jill M. Peterson,

Assistant Secretary.

[FR Doc. 2020–00366 Filed 1–13–20; 8:45 am]

BILLING CODE 8011–01–P

[34] 17 CFR 240.17Ad–22(e)(6)(v).

SECURITIES AND EXCHANGE COMMISSION

[Release No. 34–87908; File No. S7–24–89]

Joint Industry Plan; Notice of Filing of the Forty-Fourth Amendment to the Joint Self-Regulatory Organization Plan Governing the Collection, Consolidation and Dissemination of Quotation and Transaction Information for Nasdaq-Listed Securities Traded on Exchanges on an Unlisted Trading Privileges Basis

January 8, 2020.

I. Introduction

Pursuant to Section 11A of the Securities Exchange Act of 1934 (''Act''),[1] and Rule 608 of Regulation National Market System (''NMS'') thereunder,[2] notice is hereby given that on July 5, 2019,[3] the Joint Self-Regulatory Organization Plan Governing the Collection, Consolidation and Dissemination of Quotation and Transaction Information for Nasdaq-Listed Securities Traded on Exchanges on an Unlisted Trading Privileges Basis (''Nasdaq/UTP Plan'' or ''Plan'')[4] participants (''Participants'')[5] filed with the Securities and Exchange Commission (''SEC'' or ''Commission'') a proposal to amend the Nasdaq/UTP Plan. The amendment represents the 44th amendment to the Nasdaq/UTP Plan (''Amendment''). As described in the Amendment, the Participants propose to make mandatory a conflicts

[1] 15 U.S.C. 78k–1.

[2] 17 CFR 242.608.

[3] *See* Letter from Robert Books, Chair, Nasdaq/UTP Plan Operating Committee, to Vanessa Countryman, Secretary, Commission, dated July 3, 2019 (''Transmittal Letter'').

[4] The Plan governs the collection, processing, and dissemination on a consolidated basis of quotation information and transaction reports in Eligible Securities for its Participants. This consolidated information informs investors of the current quotation and recent trade prices of Nasdaq securities. It enables investors to ascertain from one data source the current prices in all the markets trading Nasdaq securities. The Plan serves as the required transaction reporting plan for its Participants, which is a prerequisite for their trading Eligible Securities. *See* Securities Exchange Act Release No. 55647 (April 19, 2007), 72 FR 20891 (April 26, 2007).

[5] The Participants are the national securities association and national securities exchanges that submit trades and quotes to the Plan and include: Cboe BYX Exchange, Inc., Cboe BZX Exchange, Inc., Cboe EDGA Exchange, Inc., Cboe EDGX Exchange, Inc., Cboe Exchange, Inc., NYSE Chicago, Inc., Financial Industry Regulatory Authority, Inc., The Investors' Exchange LLC, Long-Term Stock Exchange, Inc., Nasdaq BX, Inc., Nasdaq ISE, LLC, Nasdaq PHLX, Inc., The Nasdaq Stock Market LLC, New York Stock Exchange LLC, NYSE American LLC, NYSE Arca, Inc., and NYSE National, Inc. (each a ''Participant'' and collectively, the ''Participants''). Participants are also members of the Plan's Operating Committee.

of interest disclosure regime that currently is voluntary. Under the current practice, which the Amendment would make mandatory, the Participants,[6] the Processor,[7] the Administrator,[8] and the members of the Advisory Committee [9] (collectively, the ''Disclosing Parties'') [10] provide responses to a set of questions designed to provide transparency regarding potential conflicts of interest of such parties. Each of the Disclosing Parties' responses are then made publicly available on the Plan's website.[11] The Participants state that they believe that publicly providing these responses increases transparency and confidence in the governance of the Plan.[12]

The proposed Amendment has been filed by the Participants pursuant to Rule 608(b)(2) under Regulation NMS.[13] The Commission is publishing this notice to solicit comments from interested persons on the proposed Amendment.

The Commission notes that, contemporaneously with the issuance of this notice, it has issued a notice of proposed order (''Governance Notice'') [14] soliciting public comment on a proposed order that would direct the national securities exchanges and the Financial Industry Regulatory Authority, Inc. (collectively, ''SROs'') to act jointly in developing and filing with the Commission a proposed new single national market system plan, which will replace the existing national market system plans that govern the public dissemination of real-time, consolidated equity market data for national market system stocks (''Equity Data Plans''). The Commission stated in the Governance Notice its view that, among other concerns,

> conflicts of interest are inherent to the Equity Data Plans' current governance structure because some exchange Participants have a dual role as both an SRO jointly responsible for the operation of the Equity Data Plans and part of a publicly held company that offers proprietary data products. Moreover, an SRO representative on the operating committee may have direct responsibility for some or all of an exchange's proprietary data business.[15]

The Governance Notice solicits public comment on a proposed order that would direct the SROs to include provisions in the New Data Plan (as defined in the Governance Notice) addressing several issues arising from the current governance structure of the Plan, and the proposed order discusses the Commission's view that the new data plan should include a comprehensive conflicts of interest policy.

In addition, contemporaneously with the publication of notice of the Amendment set forth below, the Commission also is publishing a separate proposed amendment from the Nasdaq/UTP Plan concerning a confidentiality policy.

II. Text of the Amendment

Set forth below is the entirety of the Amendment submission that the Participants prepared and filed with the Commission, which includes a statement of the purpose and summary of the Amendment, along with the information required by Rules 608(a) and 601(a) under the Act.[16]

A. Statement of the Purpose of the Amendment

1. Background

With Exchanges permitted to offer both proprietary market data products and also acting as Participants in running the public market data stream, potential conflicts of interest are inherent in the structure developed under Regulation NMS. There may be instances in which representatives from the Participants and Advisory Committee members have responsibilities with respect to both proprietary data and Securities Information Processor (''SIP'') data. Drawing on the expertise of persons with such overlapping responsibilities may give rise to potential conflicts of interest, and to address such potential conflicts of interest, the Participants adopted a voluntary conflicts disclosure regime.

After discussion among the Participants and the Advisory Committee at several meetings of the Plan's Operating Committee, the Participants believe that a disclosure regime is a pragmatic step to address potential conflicts of interest.

As noted below, the Disclosing Parties have voluntarily provided responses to the disclosure regime questions. The responses are available on the Plan's website. The purpose of the Amendment is to make the disclosures a requirement on a going forward basis instead of relying on voluntary disclosures.

Required Disclosures

As part of the disclosure regime, the Participants propose that the Participants, the Processors, the Administrators, and members of the Advisory Committee respond to questions that are tailored to elicit responses that disclose the potential conflicts of interest.

The Participants propose that the Participants respond to the following questions and instructions:

- Is the Participant's firm for profit or not-for-profit? If the Participant's firm is for profit, is it publicly or privately owned? If privately owned, list any owner with an interest of 5% or more of the Participant, where to the Participant's knowledge, such owner, or any affiliate controlling, controlled by, or under common control with the owner, subscribes, directly or through a third-party vendor, to SIP and/or exchange Proprietary Market Data products.
- Does the Participant firm offer real-time proprietary equity market data that is filed with the SEC (''Proprietary Market Data'')? If yes, does the firm charge a fee for such offerings?
- Provide the names of the representative and any alternative representatives designated by the Participant who are authorized under the Plans to vote on behalf of the Participant. Also provide a narrative description of the representatives' roles within the Participant organization, including the title of each individual as well as any direct responsibilities related to the development, dissemination, sales, or marketing of the Participant's Proprietary Market Data, and the nature of those responsibilities.

The Participants propose that the Processors respond to the following questions and instructions:

- Is the Processor an affiliate of or affiliated with any Participant? If yes, disclose the Participant(s)?
- Provide a narrative description of the functions directly performed by the manager employed by the Processor to provide Processor services to the Plans and the staff that reports to that manager (collectively, the ''Plan Processor'').

[6] *See Id.*

[7] The ''Processor'' is charged with collecting, processing and preparing for distribution or publication all Plan information. The Processor for the Nasdaq/UTP Plan is Nasdaq Stock Market LLC (''Nasdaq'').

[8] The ''Administrator'' is charged with administering the Plans to include data feed approval, customer communications, contract management, and related functions. The Administrator of the Nasdaq/UTP Plan is Nasdaq.

[9] ''Advisory Committee members'' are individuals who represent particular types of financial services firms or actors in the securities market, or who were selected by Plan participants to be on the Advisory Committee.

[10] Information about the Processor, Administrator, and Advisory Committee members is available at *https://www.utpplan.com/governance.*

[11] *See https://www.utpplan.com/governance.*

[12] *See* Transmittal Letter at 1.

[13] 17 CFR 242.608(b)(2).

[14] *See* Securities Exchange Act Release No. 87906 (January 8, 2020).

[15] *Id.* at A–66 to A–67 (footnotes omitted).

[16] *See* 17 CFR 242.608(a)(4) and (a)(5).

• Does the Plan Processor provide any services for any Participant's Proprietary Market Data products or other Plans? If yes, disclose the services the Plan Processor performs and identify which Plans. Does the Plan Processor have any profit or loss responsibility for a Participant's Proprietary Market Data products?

• List the policies and procedures established to safeguard confidential Plan information that is applicable to the Plan Processor.

The Participants propose that the Administrators respond to the following questions and instructions:

• Is the Administrator an affiliate of or affiliated with any Participant? If yes, which Participant?

• Provide a narrative description of the functions directly performed by administrative services manager and the staff that reports to that manager (collectively, the ''Plan Administrator'').

• Does the Plan Administrator provide any services for any Participant's Proprietary Market Data products? If yes, what services? Does the Plan Administrator have any profit or loss responsibility for a Participant's Proprietary Market Data products?

• List the policies and procedures established to safeguard confidential Plan information that is applicable to the Plan Administrator.

The Participants propose that the Members of the Advisory Committee respond to the following questions and instructions:

• Provide the Advisor's title and a brief description of the Advisor's role within the firm.

• Does the Advisor have responsibilities related to the firm's use or procurement of market data?

• Does the Advisor have responsibilities related to the firm's trading or brokerage services?

• Does the Advisor's firm use the SIP? Does the Advisor's firm use exchange Proprietary Market Data products?

• Does the Advisor's firm have an ownership interest of 5% or more in one or more Participants? If yes, list the Participant(s).

• Does the Advisor actively participate in any litigation against the Plans?

The Participants will post the responses to these questions on the Plan's website. If a Disclosing Party has any material changes in its responses, the Disclosing Party must promptly update its disclosures. Additionally, the Disclosing Parties will update the disclosures on an annual basis to reflect any changes. This annual update must be made before the first quarterly session meeting of each calendar year, which is generally held in mid-February.

B. Governing or Constituent Documents

Not applicable.

C. Implementation of Amendment

Each of the Participants has approved the amendments in accordance with Section IV.C of the Nasdaq/UTP Plan. The Participants also received and incorporated feedback from the Advisory Committee in preparing the disclosure requirements.

D. Development and Implementation Phases

The Disclosing Parties have voluntarily completed, and the Participants have posted, responses to the questions outlined above on the Plan's website. The purpose of the amendment, going forward, is to make the disclosures a requirement rather than relying on voluntary disclosures.

E. Analysis of Impact on Competition

The Participants believe that the proposed amendments do not impose any burden on competition that is not necessary or appropriate in furtherance of the purposes of the Act. The Participants, together with the other Disclosing Parties, have determined to implement the disclosure regime described herein. The Participants believe that adopting this disclosure regime is an important step in addressing the potential conflicts of interest.

The disclosure regime should increase transparency in the governance of the public market data stream, and consequently, increase confidence in the proper functioning of the Operating Committee.

F. Written Understanding or Agreements Relating to Interpretation of, or Participation in, Plan

Not applicable.

G. Approval by Sponsors in Accordance With Plan

Section IV.C.1 of the Nasdaq/UTP Plan requires the Participants to unanimously approve the amendment proposed herein. They so approved it.

H. Description of Operation of Facility Contemplated by the Proposed Amendment

Not applicable.

I. Terms and Conditions of Access

Not applicable.

J. Method of Determination and Imposition, and Amount of, Fees and Charges

Not applicable.

K. Method and Frequency of Processor Evaluation

Not applicable.

L. Dispute Resolution

Not applicable.

III. Regulation NMS Rule 601(a)

A. Equity Securities for Which Transaction Reports Shall Be Required by the Plan

Not applicable.

B. Reporting Requirements

Not applicable.

C. Manner of Collecting, Processing, Sequencing, Making Available and Disseminating Last Sale Information

Not applicable.

D. Manner of Consolidation

Not applicable.

E. Standards and Methods Ensuring Promptness, Accuracy and Completeness of Transaction Reports

Not applicable.

F. Rules and Procedures Addressed to Fraudulent or Manipulative Dissemination

Not applicable.

G. Terms of Access to Transaction Reports

Not applicable.

H. Identification of Marketplace of Execution

Not applicable.

IV. Solicitation of Comments

The Commission seeks comments on the Amendment. Interested persons are invited to submit written data, views, and comments concerning the foregoing, including whether the Amendment is consistent with the Act and the rules thereunder. Among other things, the Commission asks commenters to consider whether the Amendment to the current Plan addresses the concerns outlined in the Governance Notice or whether they should be further enhanced regarding conflicts of interest in national market system plan governance. Accordingly, the Commission requests comments on matters including, but not limited to, the following:

Proposed Disclosure

1. The text of the Amendment, set forth above, states that: ''With

Exchanges permitted to offer both proprietary market data products and also acting as Participants in running the public market data stream, potential conflicts of interest are inherent in the structure developed under Regulation NMS.'' The Amendment further notes that ''[t]here may be instances in which representatives from the Participants and Advisory Committee members have responsibilities with respect to both proprietary data and [SIP] data'' and that ''such overlapping responsibilities may give rise to potential conflicts of interest.'' Do commenters believe the proposed Amendment adequately addresses those potential conflicts? Please provide sufficient detail to support your views, including, to the extent available, actual or possible examples.

2. If commenters do not believe that the proposed Amendment adequately addresses the potential conflicts of interest arising from the Plan's current governance structure, is that because commenters believe the Amendment is inadequate in any particular way? Or is it because commenters believe that the potential conflicts of interest have not been characterized accurately? If so, in what ways do commenters believe the Amendment fails to describe the current environment and potential conflicts of interest?

3. In their filing, the Participants state that the proposed questions in the disclosure document are tailored to elicit information relevant to assess the extent of an individual's potential conflict of interests with the Plan. Do commenters believe that the questions for Participants, Processors, Administrators, and members of the Advisory Committee are sufficient to elicit information to provide insight into all potential conflicts? Will public availability of the responses increase transparency and confidence in the governance of the Plan? Do commenters believe the proposed disclosures are sufficient or should enhanced disclosures be required? If so, what additional items of disclosure should be required and why? Do commenters believe that additional disclosures should be required for the representatives and alternative representatives of a Participant, Processor, Administrator, or member of the Advisory Committee?

4. In their filing, the Participants state that a disclosure-based regime is a pragmatic step to address potential conflicts of interests. Do commenters agree or disagree with that statement? Do commenters believe that a disclosure-based regime is sufficient to address the potential conflicts that Participants, Processors, Administrators, and members of the Advisory Committee may face in their roles within the Plan?

5. Do commenters think any other types of persons should be required to provide disclosures, such as services providers to the Administrator that provide audit, accounting, or other professional services? As an example, if auditing services are outsourced to a Participant's employer or an affiliate that also is offering proprietary data products to SIP customers and/or conducting audits for those products, should that entity also be required to disclose its conflicts and otherwise be subject to the terms of the conflicts of interest policy, even if it is neither the Administrator nor Processor?

6. Do commenters believe that an alternative approach could better identify and address conflicts of interests among Participants, Processors, Administrators, and the Advisory Committee, as well as auditors? For example, should a disclosure regime be supplemented with certain prohibited conduct or procedural requirements, such as a prohibition on a Participant voting when that Participant has direct business responsibilities related to producing, selling, or managing competing data products? If you believe an alternative approach is appropriate, please provide details on any such alternative approach. Do commenters regard the Plan's ability to identify and protect the confidentiality of competitive information as an important component to the Plan's ability to manage conflicts of interest? If so, how do commenters regard the interaction between this proposed Amendment and the separate proposed Plan amendment to govern treatment of confidential information noted above?

7. Do commenters believe that the proposed disclosure questions for each party are sufficient to identify the specific relationships that may give rise to a conflict under the Plan and related information? Separately, do commenters believe that the proposed questions effectively require all material facts necessary to not only identify the nature of the conflict, but also the effect it may have on the Plan? Should the Amendment require more disclosure of such potential effects or greater details with respect to the disclosures that are made?

8. Do commenters believe that the Plan should require additional public disclosures of any personal, business, or financial interests, and any employment or other commercial relationships that could materially affect the ability of a party to be impartial regarding actions of the Plan?

9. The Participants propose to continue to post the conflicts of interest disclosures for each party on the Plan's website. Do commenters believe that doing so provides sufficient public notice of potential conflicts? If not, in what other manner should the disclosures be made public? For example, should Participants be required to acknowledge potential conflicts when discussing specific matters at Operating Committee meetings or subcommittee meetings that present a conflict? Should a complete set of the disclosures be included in the materials for each Plan meeting? Is the timing clear with respect to the requirement that a Disclosing Party ''promptly'' update its disclosures, or should the Amendment be more specific? What do commenters consider sufficiently prompt? Within one week? Within 30 days? Some other timeframe?

10. As proposed, the Amendment states that disclosures will be made and updated annually or upon any material change. Do commenters believe that these intervals are sufficient, or should updates be required more frequently such as in advance of scheduled Plan meetings? What constitutes a ''material'' change that should require the filing of an amended disclosure? Please explain.

Proposed Disclosure for Participants

1. Do commenters believe that any individual representing a Participant that is directly involved in the management, development, pricing, or sale of proprietary data products offered to SIP customers should participate in discussions and related Plan votes regarding the pricing of SIP data products? If so, how do commenters believe Participants should address the conflicts their representatives may face in their dual role of pricing and developing SIP data products as well as their own proprietary data products?

2. Do commenters believe that a Participant should be recused from voting when it or an affiliate is competing for a contract to serve as a Processor for the Plan? Why or why not? Are there any other scenarios that present conflicts that should result in a Participant being recused from voting?

3. Do commenters believe recusal on certain Plan action when a potential conflict is present is an appropriate mechanism to address conflicts? If so, under what circumstances? If applicable, do commenters believe that recusal should be mandatory or should it be voluntary? Why or why not?

4. Do commenters believe that Operating Committee members should

be permitted to raise the issue of a potential conflict of interest of another Participant for discussion before the Operating Committee, even if the Participant did not itself disclose the potential conflict? Do commenters believe that the Operating Committee should have the ability to take action in response to disclosed or undisclosed conflicts, such as requiring the Participant to recuse itself from a certain discussion or vote on a particular matter? If so, how should the Operating Committee take such action? Should the Participants vote on recusal or should the Participants seek input from the Advisory Committee? Why or why not?

Proposed Disclosures for Processors

1. Do commenters believe that the proposed disclosure questions for the Processor are sufficient to identify the specific circumstances in which a Participant is both voting on an Operating Committee and competing to act as Processor for the Plan? Do commenters believe that the disclosure questions are tailored to the role that the Processor performs and the fact that the Processor is present at Plan meetings but do not vote on Plan matters, or should different or additional disclosure be required for the Processor? Separately, do commenters believe that the proposed Processor questions effectively require all material facts necessary to not only identify the nature of the potential conflict, but also the effect it may have on the Plan? Should the Amendment require more disclosure of such potential effects? Should the Amendment elaborate on what ''profit or loss responsibility for a Participant's Proprietary Market Data products'' means in the context of the required disclosures? Alternatively, do commenters believe that the Plan's separately-proposed confidentiality proposal would address some of the potential effects of conflicts of interests if approved?

2. Do commenters have concerns about affiliations between a Plan's Processor and a Participant? If so, do commenters believe the conflicts of interest disclosure is sufficient to address those concerns? Should the Amendment require a description of the nature of the affiliation?

3. Do commenters believe that a Participant or its affiliate that is competing for a contract to serve as a Processor for the Plan should participate in discussions and related Plan votes regarding the selection of the Processor for the Plan? If so, how do commenters believe Participants should address the conflicts they face in their dual role of competing to serve as a Processor while serving as a Participant that participates in the discussion of, and ultimately votes on, selection of the Processor?

Proposed Disclosures for the Administrator

1. Do commenters believe that the proposed disclosure questions for the Administrator are sufficient to identify the specific interests and employment, commercial or other relationships that may give rise to a conflict under the Plan? Separately, do commenters believe that the proposed Administrator questions effectively require all material facts necessary to not only identify the nature of the conflict, but also the effect it may have on the Plan? Should the Amendment require more disclosure of such potential effects or greater details with respect to the disclosures that are made?

2. To the extent that the Administrator enlists assistance from an auditor or any other professional services subcontractor for any of the Plan(s), and the subcontractor is affiliated with an entity that is involved in the development, pricing, or sale of proprietary data products offered to SIP customers, or is subject to any other conflict, should all of the disclosures and conflicts policies referenced above also be applicable to them? Or do commenters believe that concerns arising from potential conflicts of interest would be more appropriately addressed for a subcontractor if the subcontractor could attest that it is sufficiently walled-off from the proprietary data business of its affiliate?

Proposed Disclosures for Members of the Advisory Committee

1. Do commenters believe that the proposed disclosure questions for Advisory Committee members are sufficient to identify the specific interests and employment, commercial, or other relationships that may give rise to a conflict under the Plan? Separately, do commenters believe that the proposed Advisory Committee members' questions effectively require all material facts necessary to not only identify the nature of the conflict, but also the effect it may have on the Plan? Should the Amendment require more disclosure of such potential effects or greater details with respect to the disclosures that are made? Should the Amendment require Members of the Advisory Committee to identify affiliations with any Disclosing Party, and clarify that both direct and indirect ownership interests in a Participant are subject to disclosure? Is it clear what ''actively participate in any litigation against the Plans'' means, or should the Amendment require additional detail?

2. Do commenters believe that the Plan should require additional public disclosures of any personal, business, commercial, or financial interests, and any employment relationships that could materially affect the ability of the Advisory Committee Member to participate impartially in discussing actions of the Plan?

3. Do commenters believe that Advisory Committee members that purchase SIP data products should participate in discussions regarding the pricing of SIP data products? If so, how do commenters believe Advisory Committee members should address that potential conflict?

Participant Statement Regarding Competition

1. The Participants state in their filing that the Amendment does not impose any burden on competition that is not necessary or appropriate in furtherance of the purposes of the Act. Do commenters believe that the Amendment to the Plan imposes any burden on competition that is not necessary or appropriate in furtherance of the purposes of the Act? Please explain.

2. What effect might the Amendment have on competition, if any? Please explain. How would any effect on competition from the proposal benefit or harm the national market system and/or various market participants? Please describe and explain how, if at all, aspects of the national market system or different market participants would be affected. Please support any response with data, if possible.

Comments may be submitted by any of the following methods:

Electronic Comments

- Use the Commission's internet comment form (*http://www.sec.gov/rules/sro.shtml*); or
- Send an email to *rule-comments@sec.gov.* Please include File Number S7–24–89 on the subject line.

Paper Comments

- Send paper comments in triplicate to Secretary, Securities and Exchange Commission, 100 F Street NE, Washington, DC 20549–1090.

All submissions should refer to File Number File Number S7–24–89. This file number should be included on the subject line if email is used. To help the Commission process and review your comments more efficiently, please use only one method. The Commission will post all comments on the Commission's website (*http://www.sec.gov/rules/*

sro.shtml). Copies of the submission, all written statements with respect to the proposed Amendment that are filed with the Commission, and all written communications relating to the proposed Amendment between the Commission and any person, other than those that may be withheld from the public in accordance with the provisions of 5 U.S.C. 552, will be available for website viewing and printing in the Commission's Public Reference Room, 100 F Street NE, Washington, DC 20549, on official business days between the hours of 10:00 a.m. and 3:00 p.m. Copies of the filing also will be available for website viewing and printing at the principal office of the Plan. All comments received will be posted without change. Persons submitting comments are cautioned that we do not redact or edit personal identifying information from comment submissions.

You should submit only information that you wish to make available publicly. All submissions should refer to File Number S7–24–89 and should be submitted on or before February 4, 2020.

By the Commission.

Vanessa A. Countryman,

Secretary.

[FR Doc. 2020–00357 Filed 1–13–20; 8:45 am]

BILLING CODE 8011–01–P

SECURITIES AND EXCHANGE COMMISSION

[Release No. 34–87909; File No. SR–CTA/CQ–2019–04]

Consolidated Tape Association; Notice of Filing of the Thirty-Third Substantive Amendment to the Second Restatement of the CTA Plan and Twenty-Fourth Substantive Amendment to the Restated CQ Plan

January 8, 2020.

I. Introduction

Pursuant to Section 11A of the Securities Exchange Act of 1934 (''Act'')[1] and Rule 608 of Regulation National Market System (''NMS'') thereunder,[2] notice is hereby given that on November 25, 2019,[3] the Consolidated Tape Association Plan (''CTA Plan'') participants (''Participants'')[4] filed with the Securities and Exchange Commission (''SEC'' or ''Commission'') a proposal to amend the Second Restatement of the CTA Plan and the Restated Consolidated Quotation Plan (''CQ Plan'') (each a ''Plan'' and together with the CTA Plan, the ''Plans'').[5] These amendments represent the Thirty-Third Substantive Amendment to the CTA Plan and Twenty-Fourth Substantive Amendment to the CQ Plan (''Amendments''). As described in the Amendments, the Participants propose to adopt a confidentiality policy to provide guidelines for the Operating Committee and the Advisory Committee of the Plans, and all subcommittees thereof, regarding the confidentiality of any data or information generated, accessed, or transmitted to the Operating Committee, as well as discussions occurring at a meeting of the Operating Committee or any subcommittee. According to the Participants, the confidentiality policy is designed broadly to (i) protect against any potential misuse of confidential information, which includes, but is not limited to, protecting confidential information obtained or generated by the Administrator and Processor in connection with the operation of the Plans as well as (ii) to allow the Operating Committee to disclose confidential information to the Advisory Committee to obtain its input without concern that such confidential information may be shared beyond the Advisory Committee. The Participants believe that the proposed Amendments will allow for more sharing of information with the Advisory Committee regarding the operation of the Plans and elicit more input by the Advisory Committee on Plan matters that might otherwise be deemed confidential.[6]

The proposed Amendments have been filed by the Participants pursuant to Rule 608(b)(2) under Regulation NMS.[7] The Commission is publishing this notice to solicit comments from interested persons on the proposed Amendments.

The Commission notes that, contemporaneously with the issuance of this notice, it has issued a notice of proposed order (''Governance Notice'')[8] soliciting public comment on a proposed order that would direct the national securities exchanges and the Financial Industry Regulatory Authority, Inc. (collectively, ''SROs'') to act jointly in developing and filing with the Commission a proposed new single national market system plan, which will replace the existing national market system plans that govern the public dissemination of real-time, consolidated equity market data for national market system stocks (''Equity Data Plans''). The Commission stated in the Governance Notice its view that, among other concerns,

> [i]n the operation of the Equity Data Plans, Participants and Participant representatives have been privy to confidential and proprietary information of substantial commercial or competitive value, including, among other things, information about core data usage, the [securities information processors' or] SIPs' customer lists, financial information, and subscriber audit results. However, the terms of the Equity Data Plans do not address commercial use of confidential or proprietary information by the Participants.[9]

The Governance Notice solicits public comment on a proposed order that would direct the SROs to include provisions in the New Data Plan (as defined in the Governance Notice) addressing several issues arising from the current governance structure of the Plans, and discusses the Commission's view that the new data plan should

[1] 15 U.S.C 78k–1(a)(3).

[2] 17 CFR 242.608.

[3] *See* Letter from Robert Books, Chairman, Operating Committee, CTA/CQ Plans, to Vanessa Countryman, Secretary, Commission, dated November 19, 2019 (''Transmittal Letter'').

[4] The Participants are the national securities association and national securities exchanges that submit trades and quotes to the Plans and include: Cboe BYX Exchange, Inc., Cboe BZX Exchange, Inc., Cboe EDGA Exchange, Inc., Cboe EDGX Exchange, Inc., Cboe Exchange, Inc., Financial Industry Regulatory Authority, Inc., The Investors' Exchange LLC, Long-Term Stock Exchange, Inc., Nasdaq BX, Inc., Nasdaq ISE, LLC, Nasdaq PHLX, Inc., The Nasdaq Stock Market LLC, New York Stock Exchange LLC, NYSE American LLC, NYSE Arca, Inc., NYSE Chicago, Inc., and NYSE National, Inc. (each a ''Participant'' and collectively, the ''Participants''). Participants also are members of the Plans' Operating Committees. Other parties include the ''Processor,'' who is charged with collecting, processing and preparing for distribution or publication all Plan information. The ''Administrator'' is charged with administering the Plan to include data feed approval, customer communications, contract management, and related functions. The ''Advisory Committee members'' are individuals who represent particular types of financial services firms or actors in the securities market, and who were selected by Plan participants to be on the Advisory Committee. A list of the Processor, Administrator, and Advisory Committee members is available at *https://www.ctaplan.com/governance.*

[5] *See* Securities Exchange Act Release Nos. 10787 (May 10, 1974), 39 FR 17799 (May 20, 1974) (declaring the CTA Plan effective); 15009 (July 28, 1978), 43 FR 34851 (August 7, 1978) (temporarily authorizing the CQ Plan); and 16518 (January 22, 1980), 45 FR 6521 (January 28, 1980) (permanently authorizing the CQ Plan). The most recent restatement of both Plans was in 1995. The CTA Plan, pursuant to which markets collect and disseminate last sale price information for non-NASDAQ listed securities, is a ''transaction reporting plan'' under Rule 601 under the Act, 17 CFR 242.601, and a ''national market system plan'' under Rule 608 under the Act, 17 CFR 242.608. The CQ Plan, pursuant to which markets collect and disseminate bid/ask quotation information for listed securities, is a ''national market system plan'' under Rule 608 under the Act, 17 CFR 242.608.

[6] *See* Transmittal Letter at 1.

[7] 17 CFR 242.608(b)(2).

[8] *See* Securities Exchange Act Release No. 87906 (January 8, 2020).

[9] *Id.* at A–67 (footnotes omitted).

include provisions regarding the treatment of confidential information.

In addition, contemporaneously with the publication of notice of the Amendments set forth below, the Commission also is publishing a separate proposed amendment from the Plans concerning a conflicts of interest policy.

II. Text of the Amendment

Set forth below is the entirety of the Amendment submission that the Participants filed with the Commission, which includes a statement of the purpose and summary of the Amendments, along with the information required by Rules 608(a) and 601(a) under the Act.[10]

A. Purpose of the Amendment

1. Background

Under the provisions of the Plans, the Advisory Committee has the right to attend all meetings of the Operating Committee and receive any information concerning Plan matters distributed to the Operating Committee. The Advisory Committee also can attend meetings of most subcommittees. The Operating Committee, however, may meet in Executive Session without the Advisory Committee to discuss items that require confidential treatment, as determined by majority vote of the Operating Committee. Last year, the Participants adopted an Executive Session Policy, which provides a specified list of topics that are appropriate for Executive Session. Those topics include:

- Fees that require discussion of confidential financial information;
- subscriber audit findings;
- discussions that require the disclosure of Material Non-Public Information;
- financial reports containing confidential financial information;
- the portion of a discussion or evaluation of administrator and processor performance that includes confidential, non-public information;
- contract negotiations, awards, and revocations that contain non-public information;
- Advisory Committee member selection;
- litigation matters; and
- confidential, non-public discussions with the SEC.

The Participants currently use Executive Sessions sparingly to discuss confidential information. When used, the Executive Session usually lasts less than thirty minutes and is used to discuss a limited set of topics, often consisting of a single, discrete topic. Although the Executive Session is sparingly used, the Participants are now seeking additional ways to include the Advisory Committee in more discussions and to share additional confidential information with the Advisory Committee.

Therefore, the Participants are proposing a confidentiality policy to allow the Operating Committee to share confidential information with the Advisory Committee without concern that such information would be more broadly disseminated. By sharing information that would in the ordinary course be considered appropriate for confidential treatment, the Participants believe that the Advisory Committee will be able to provide more informed advice and recommendations with respect to the operation and governance of the Plans. Further, the confidentiality policy is designed to protect against any potential misuse of confidential information by: (1) Restricting the use and dissemination of customer-related information; (2) requiring the Administrator and Processor to maintain confidential information policies that will be reviewed by the Operating Committee at least every two years; (3) permitting disclosure of confidential information by a representative of a Participant to other employees or agents of the Participant or its affiliates only as needed to perform that representative's function on behalf of the Participant; and (4) setting clear procedures regarding the treatment of various forms of confidential information.

The Participants discussed this proposal extensively with the Advisory Committee and this proposal reflects input and comments from the members of the Advisory Committee.

2. Proposed Confidentiality Policy

In an effort to expand the information that the Operating Committee may provide to the Advisory Committee, and also to provide guidelines about what information can and cannot be shared outside the meetings of the Operating Committee, the Participants are proposing to adopt a confidentiality policy.

The proposed confidentiality policy would apply to all representatives of the Participants, Pending Participants, the CQ/CTA Administrator and Processor, and the Advisory Committee. Additionally, it would apply to agents of the Operating Committee, including, but not limited to, attorneys, advisors, accountants, contractors or subcontractors (''Agents''), as well as any third parties invited to attend meetings of the Operating Committee or Plan subcommittees. These persons are collectively defined in the confidentiality policy as ''Covered Persons.''[11]

The proposed confidentiality policy creates three categories of confidential information: (1) Restricted Information; (2) Highly Confidential Information; and (3) Confidential Information. Restricted Information is defined as (i) highly sensitive customer-specific financial information, (ii) customer-specific audit information, (iii) other customer financial information, and (iv) Personal Identifiable Information. Highly Confidential Information is defined as (i) any data or information shared in an Executive Session or that would otherwise qualify for confidential treatment pursuant to the Plans' Executive Session Policy;[12] and (ii) any other highly sensitive Participant-specific, customer-specific, individual-specific, or otherwise sensitive information relating to the Operating Committee, Participants, or customers that is not otherwise Restricted Information. Highly Confidential Information includes: A Participant's contract negotiations with the Processor or Administrator; personnel matters; information concerning the intellectual property of Participants or customers; and any document subject to the Attorney-Client Privilege or Work Product Doctrine. Finally, Confidential Information is defined as (i) any non-public data or information designated as Confidential by a majority vote of the Operating Committee; (ii) any document generated by a Participant or Advisor and designated by that Participant or Advisor as Confidential; (iii) the minutes of the Operating Committee or any subcommittee thereof unless approved by the Operating Committee for release to the public; and (iv) the individual views and statements of Covered Persons and SEC staff disclosed during a meeting of the Operating Committee or any subcommittees thereunder.

The confidentiality policy outlines the procedures with respect to

[10] *See* 17 CFR 242.608(a)(4) and (a)(5).

[11] Covered Persons would not include staff of the Commission.

[12] Although Highly Confidential Information includes data or information shared in an Executive Session, the Participants plan on including more information in General Session rather than Executive Session. The proposed confidentiality policy allows the Participants to share more sensitive information with the Advisory Committee without concerns that such information would be more broadly disseminated. Therefore, the Participants intend to share additional information, previously designated for Executive Session, with the Advisory Committee, including confidential financial information.

identifying documents as Restricted, Highly Confidential, or Confidential as well as the procedures regarding how to treat documents and information in each category. With respect to general procedures, the confidentiality policy places the obligation on the Administrator and the Processor to be the custodian of all documents and to maintain the classification of such documents. The Administrator will ensure that all documents are properly labeled with the appropriate category. The Administrator may, under delegated authority, designate documents as Restricted, Highly Confidential, or Confidential, which will be determinative unless altered by a majority vote of the Operating Committee. Finally, all contracts between the Operating Committee and its Agents will require the Operating Committee information to be treated as Confidential Information that may not be disclosed to third parties, except as necessary to effect the terms of the contract or as required by law.

3. Procedures Governing Restricted Information

With respect to Restricted Information, the proposed confidentiality policy provides that such information will be kept in confidence by the Administrator and Processor and will not be disclosed to the Operating Committee or any subcommittee thereof, or during Executive Session, or the Advisory Committee, except in the following circumstances:

1. If an Administrator determines that it is appropriate to share a customer's financial information with the Operating Committee or a subcommittee thereof, the Administrator will first anonymize the information by redacting the customer's name and any other information that may lead to the identification of the customer.

2. The Administrator may disclose the identity of a customer that is the subject of the Restricted Information in Executive Session only if the Administrator determines in good faith that it is necessary to disclose the customer's identity in order to obtain input or feedback from the Operating Committee or a subcommittee thereof about a matter of importance to the Plans. In such an event, the Administrator will change the designation of the information at issue from ''Restricted Information'' to ''Highly Confidential Information.''

3. The Administrator may share Restricted Information related to any willful, reckless, or grossly negligent conduct by a customer discovered by the Administrator with the UTP Administrator or with the SEC, as appropriate, upon majority vote of the Operating Committee in Executive Session, provided that, in any report by the Administrator during Executive Session related to such disclosure, the Administrator anonymizes the information related to the wrongdoing by removing the names of the party or parties involved, as well as any other information that may lead to the identification of such party or parties.

The Participants believe that the procedures governing Restricted Information will ensure the protection of customer identities and customer-related information, and such information will be disclosed only when necessary to conduct Plan-related business.

4. Procedures Governing Highly Confidential Information

With respect to Highly Confidential Information, the proposed confidentiality policy provides that such information may be disclosed only in Executive Session of the Operating Committee or to the Legal Subcommittee. Highly Confidential Information may also be disclosed to SEC staff, unless it is protected by the Attorney-Client Privilege or the Work Product Doctrine. Any disclosure of Highly Confidential Information to SEC staff will be accompanied by a FOIA Confidential Treatment Request. The confidentiality policy does not permit any other disclosure of Highly Confidential Information.

In addition, a Covered Person that is a representative of a Participant may disclose Highly Confidential Information to other employees or agents of the Participant or its affiliates only as needed for such Covered Person to perform his or her function on behalf of the Participant, as reasonably determined by the Covered Person. A copy of the confidentiality policy will be made available to recipients of such information who are employees or agents of a Participant or its affiliates that are not Covered Persons, who will be required to abide by the confidentiality policy.

Further, because of the heightened concerns regarding the disclosure of Highly Confidential Information, in the event a Covered Person is determined by a majority vote of the Operating Committee to have disclosed Highly Confidential Information, the Operating Committee will determine the appropriate remedy for the breach based on the facts and circumstances of the event. For the representatives of a Participant, appropriate remedies include a letter of complaint submitted to the SEC, which may be made public by the Operating Committee. For a member of the Advisory Committee, appropriate remedies include removal of that member from the Advisory Committee.

5. Procedures Governing Confidential Information

Under the proposed confidentiality policy, Confidential Information may be disclosed to the Operating Committee, any subcommittee thereof, and the Advisory Committee. A Covered Person may not disclose Confidential Information to any individual that is not either a Covered Person or a member of the SEC staff, except with authorization of the Operating Committee, or as may be otherwise required by law. The Operating Committee or a subcommittee thereof may authorize the disclosure of Confidential Information by an affirmative vote of the number of members that represent a majority of the total number of members of the Operating Committee or subcommittee. However, with respect to Confidential Information that is generated by a Participant or member of the Advisory Committee, the Operating Committee may authorize its disclosure only with the consent of such Participant or member of the Advisory Committee.

In order to elicit industry feedback, members of the Advisory Committee may be authorized by the Operating Committee to disclose particular Confidential Information to enable them to consult with third-party industry representatives or technical experts, provided that the member of the Advisory Committee takes any steps requested by the Operating Committee to prevent further dissemination of that Confidential Information, including providing the individuals consulted with a copy of the confidentiality policy and requesting that person to maintain the confidentiality of such information in a manner consistent with the confidentiality policy.

A Covered Person that is a representative of a Participant may disclose Confidential Information to other employees or agents of the Participant or its affiliates only as needed for such Covered Person to perform his or her function on behalf of the Participant, as reasonably determined by the Covered Person. A copy of the confidentiality policy will be made available to recipients of such information who are employees or agents of a Participant or its affiliates that are not Covered Persons, who will be required to abide by the confidentiality policy.

A Covered Person may disclose his or her own individual views and statements that may otherwise be considered Confidential Information without obtaining authorization of the Operating Committee provided that the Covered Person is not disclosing the views or statements of any other Covered Person or Participant that are considered Confidential Information.

Finally, a Covered Person that discloses Confidential Information without the authorization of the Operating Committee will report such disclosure to the Chair of the Operating Committee. Such unauthorized disclosure of Confidential Information will be recorded in the minutes of the meeting of the Operating Committee and will contain: (a) The name(s) of the person(s) who disclosed such Confidential Information, and (b) a description of the Confidential Information disclosed. The name(s) of the person(s) who disclosed such Confidential Information will also be recorded in any publicly available summaries of Operating Committee minutes.

B. Governing or Constituent Documents

Not applicable.

C. Implementation of Amendment

Each of the Participants has approved the amendments in accordance with Section IV(b) of the CTA Plan and Section IV(c) of the CQ Plan, as applicable. The Participants also received and incorporated feedback from the Advisory Committee in preparing the confidentiality policy.

D. Development and Implementation Phases

Not applicable.

E. Analysis of Impact on Competition

The Participants believe that the proposed amendment does not impose any burden on competition that is not necessary or appropriate in furtherance of the purposes of the Act.

The Participants believe that the proposed confidentiality policy will provide enhanced disclosure to the Advisory Committee regarding matters that the Participants consider confidential information. Currently, the Plans allow information to be discussed in Executive Session when the Operating Committee determines that an item of Plan business requires confidential treatment. Despite the confidential nature of the information, the Participants believe that inclusion of the Advisory Committee in certain discussions that involve confidential information would be beneficial for the operation and governance of the Plans.

The confidentiality policy allows such information to be more freely shared with the Advisory Committee without concerns that the confidential information will be disseminated more broadly. Additionally, the confidentiality policy provides guidance to the representatives of Participants on how to treat confidential information that they obtained through the course of participating on the Operating Committee, thereby reducing confusion among the representatives of the Participants. Finally, by requiring Agents of the Operating Committee to adhere to the confidentiality policy, the confidentiality policy will ensure that such Agents will be subject to the same requirements as the Operating Committee when handling confidential information.

Additionally, the proposed confidentiality policy will protect customer-specific information in the possession of the Administrator and Processor. The procedures surrounding the use of Restricted Information will help to ensure that the dissemination of Restricted Information is limited to instances when necessary for the operation of the Plans. Further, the confidentiality policy requires the Administrator and Processor to establish written confidential information policies that provide for the protection of information under their control. Therefore, the confidentiality policy is designed to protect confidential information obtained or generated by the Administrator and Processor in connection with the operation of the Plans.

Finally, as noted above, the proposal was vetted with the Advisory Committee to include its input into a policy that would enhance the amount of information available to the Advisory Committee.

F. Written Understanding or Agreement Relating to Interpretation of, or Participating in Plan

Not applicable.

G. Approval by Sponsors in Accordance With Plan

Section IV(c)(i) of the CQ Plan and Section IV(b)(i) of the CTA Plan require the Participants to unanimously approve the amendments proposed herein. They so approved it.

H. Description of Operation of Facility Contemplated by the Proposed Amendment

Not applicable.

I. Terms and Conditions of Access

Not applicable.

J. Method of Determination and Imposition and Amount of, Fees and Charges

Not applicable.

K. Method and Frequency of Processor Evaluation

Not applicable.

L. Dispute Resolution

Not applicable.

III. Regulation NMS Rule 601(a)

A. Equity Securities for Which Transaction Reports Shall Be Required by the Plan

Not applicable.

B. Reporting Requirements

Not applicable.

C. Manner of Collecting, Processing, Sequencing, Making Available and Disseminating Last Sale Information

Not applicable.

D. Manner of Consolidation

Not applicable.

E. Standards and Methods Ensuring Promptness, Accuracy and Completeness of Transaction Reports

Not applicable.

F. Rules and Procedures Addressed to Fraudulent or Manipulative Dissemination

Not applicable.

G. Terms of Access to Transaction Reports

Not applicable.

H. Identification of Marketplace of Execution

Not applicable.

IV. Solicitation of Comments

The Commission seeks comments on the Amendments. Interested persons are invited to submit written data, views, and comments concerning the foregoing, including whether the Amendments are consistent with the Act and the rules thereunder. Among other things, the Commission asks commenters to consider whether the Amendments to the current Plans address the concerns outlined in the Governance Notice or whether they should be further enhanced regarding the identification and protection of confidential information. Accordingly, the Commission requests comments on matters including, but not limited to, the following:

1. Do commenters believe that Participants involved in the operation or governance of each Plan have, by consequence of their position, access to information of substantial commercial and competitive value? If so, do commenters believe that certain of that information, including customer-specific financial information, customer-specific audit information, personally identifiable information, and information concerning the intellectual property of Participants or customers, is highly sensitive to such a degree that its possession and use should be more tightly controlled? Please explain. For example, should the Amendments require logs and written attestations when a Covered Person shares Highly Confidential Information with other employees or agents of the Participant or its affiliates? Do commenters believe the Amendments should specifically address commercial use of information that is of substantial competitive value?

2. Do commenters believe that Participants' representatives should be subject to restrictions and/or information barriers as part of the confidentiality policy to address their direct or indirect involvement in the development or sale of proprietary data products to SIP customers? For example, do commenters believe that Participants' access to a list of the Processor's customers as well as information on those customers' data usage and fees paid to the Plans has competitive implications? Do commenters believe that the Plans should require recusal in certain circumstances (*e.g.,* during Executive Sessions or Operating Committee meetings) because the potential for misuse of competitively sensitive confidential information is too great? If so, what should those circumstances be? Do commenters believe that any Participant or Advisory Committee member that is directly involved in the management, sale, or development of similar proprietary market data products that may be sold to customers of the SIPs should have access to any customer information from the SIPs? Do commenters believe that Operating Committee members, as well as the Administrator, Processor, and auditor should be prohibited, unless otherwise required by law, from sharing confidential information with individuals that are not involved with the operation of the Plans and individuals employed by or affiliated with the same entity if such individuals are involved in the management, sale, or development of proprietary data products that are offered separately to a substantially similar customer base, *i.e.,* customers or potential customer of the SIPs? Would these concerns also be present for the sale of related data products that are supplemental to SIP data?

3. Do commenters believe that the Plans should require all Participants and other Covered Persons to establish, maintain, and enforce policies and procedures to safeguard confidential and proprietary information received via their participation in the Plans and to prevent its misuse by such Participants or entities controlling, controlled by, or under common control with such Participants? If so, do commenters believe the proposed Amendments sufficiently achieve that goal?

4. Do commenters believe the proposed guidelines and procedures for identifying and categorizing types of confidential information, including for providing increasing degrees of protection for more sensitive types of confidential information, provide sufficient detail and a sufficiently comprehensive process and procedures to identify, classify, and subsequently protect confidential information? Or do commenters believe that further efforts are necessary to identify, categorize, and protect confidential information and/or information of substantial competitive or commercial value? Do commenters believe that a need may arise for information or data that are not initially categorized as confidential to be categorized as such at a later point in time and, if so, what should the process be for doing so? For example, should the Operating Committee be able to classify or de-classify material as appropriate based on a majority vote?

5. Do commenters believe that the Administrator and Processor should be solely responsible for classifying material according to the proposed standards? Or do commenters believe the decisions of the Administrator and Processor should be subject to review, for example upon the request of a member of the Operating Committee? Do commenters believe that potential conflicts of interest should preclude the Administrator and Processor from solely and independently making classification determinations in those circumstances when entities with which they are directly or indirectly affiliated separately offer proprietary data products to a substantially similar customer base, *i.e.,* customers or potential customers of the SIPs?

6. Do commenters believe that certain information or data generated, accessed, transmitted to, or discussed by the Operating Committee, such as information regarding contract negotiations with a potential new Processor, Administrator, auditor, or other third party service provider, should be designated as confidential and, if so, what level of confidentiality should such information be afforded?

7. Do commenters believe that information shared in Executive Sessions should be classified as Highly Confidential simply by virtue of it having been shared in an Executive Session, or should such information be classified based solely on its content and competitive sensitivity?

8. Do commenters believe that information that is not classified at some level of confidentiality should be considered public and may be shared freely outside of the Operating Committee? What specific information do commenters believe should be considered public and shared outside of the Operating Committee?

9. Do commenters believe that the proposed guidelines and procedures setting forth the circumstances in which disclosure of confidential information may be authorized are sufficiently clear and comprehensive? Do commenters believe that the proposed provisions allowing Participants to disclose confidential and highly confidential information to other employees or agents of the Participant or its affiliates as needed as they reasonably determine is appropriate? Or do commenters believe that, if a Participant is either employed by or affiliated with an entity that offers proprietary data products that are offered for sale to a substantially similar customer base (*i.e.,* customer or potential customers of the SIPs), that Participant should be required to develop policies and procedures that govern the sharing of confidential information? Do commenters believe such policies and procedures should be reviewed by the Operating Committee and Advisors and made publicly available via the Plans' website? Do commenters believe that the potential conflicts of interest involved and the difficulty of mitigating the potential harm and potential burdens on competition are so great that Participants should be explicitly prohibited from disclosing restricted and confidential information at all or only if authorized to do so on a case-by-case basis from the Operating Committee, unless such disclosure is otherwise required by law? If disclosure is required by law, should the Covered Person be required to first notify the Operating Committee (*e.g.,* to provide the Operating Committee with an opportunity to redact information if permitted by applicable law or to

dispute the requirement to provide in its entirety)?

10. Do commenters believe that certain confidential information may become less sensitive if it is anonymized and aggregated? If so, do commenters believe that certain types of restricted or highly confidential information could be anonymized and aggregated to the point where it could be classified as public? What methodology for anonymizing confidential information would commenters suggest, and should the methodology be standardized such that the Administrator, Processor, and auditor all follow a consistent practice for anonymizing such information? Do commenters believe that certain information is so sensitive, whether anonymized or not, that it should never be shared outside of the Operating Committee or outside of the Administrator?

11. Do commenters believe that the scope of the proposed Amendments are sufficiently comprehensive to cover all parties that might have access to confidential information, or should the scope be broadened to apply to additional classes of persons? For example, should outsourced service providers (including, but not limited to, firms and persons that provide audit services, accounting services, or legal services to the Plans, the Administrator, or the Processor) be subject to additional restrictions, particularly if they are directly or indirectly affiliated with a Participant, the Administrator, the Processor, or any entity that offers separately proprietary data products to a substantially similar customer base, *i.e.,* customers or potential customers of the SIPs? If so, should the Plans explicitly preclude themselves from engaging with an Administrator, Processor, auditor, or any agents or third parties thereof, unless the entity establishes, maintains, and enforces policies and procedures to safeguard confidential and proprietary information and to prevent its direct or indirect misuse? If so, should the Operating Committee review those policies and procedures and/or should they be made public (*i.e.,* provided on the Plans' website)? For example, if the Administrator oversees a Plan's audit function (directly or through an agent or third party) but also is affiliated with an entity that sells proprietary data products to SIP customers, do commenters believe that potential conflicts of interest should preclude the Administrator from independently determining its own confidential information policies as they apply to the audit function? Or, should such policies be subject to review and approval by the Operating Committee, and be posted publicly, to help ensure their adequacy and completeness?

12. Do commenters believe that Advisory Committee members need access to sensitive information of substantial commercial and competitive value in order to perform their duties? Do commenters believe that the Advisory Committee members need access to underlying information relied on by the Participants when making decisions on funding of and improvements for the SIPs?

13. Do commenters believe the proposed remedy in the event that a Covered Person discloses ''Highly Confidential Information'' in a manner inconsistent with the proposed policy is sufficient, or should any other consequences of such disclosure be provided?

14. Similarly, do commenters believe the Amendments would sufficiently deter unauthorized disclosure of ''Confidential Information'' by a Covered Person without authorization by the Operating Committee? Do commenters believe appropriate remedies for Participants and Advisors should differ, or should potential remedies for Participants that disclose confidential information also include the possibility of removal of that Participant from the Operating Committee?

Comments may be submitted by any of the following methods:

Electronic Comments

- Use the Commission's internet comment form (*http://www.sec.gov/rules/sro.shtml*); or
- Send an email to *rule-comments@sec.gov.* Please include File Number SR–CTA/CQ–2019–04 on the subject line.

Paper Comments

- Send paper comments in triplicate to Secretary, Securities and Exchange Commission, 100 F. Street NE Washington, DC 20549–1090.

All submissions should refer to File Number SR–CTA/CQ–2019–04. This file number should be included on the subject line if email is used. To help the Commission process and review your comments more efficiently, please use only one method. The Commission will post all comments on the Commission's website (*http://www.sec.gov/rules/sro.shtml*). Copies of the submission, all written statements with respect to the proposed Amendments that are filed with the Commission, and all written communications relating to the proposed Amendments between the Commission and any person, other than those that may be withheld from the public in accordance with the provisions of 5 U.S.C. 552, will be available for website viewing and printing in the Commission's Public Reference Room, 100 F Street NE, Washington, DC 20549, on official business days between the hours of 10:00 a.m. and 3:00 p.m. Copies of the filing also will be available for website viewing and printing at the principal office of the Plans. All comments received will be posted without change. Persons submitting comments are cautioned that we do not redact or edit personal identifying information from comment submissions. You should submit only information that you wish to make available publicly. All submissions should refer to File Number SR–CTA/CQ–2019–04 and should be submitted on or before February 4, 2020.

By the Commission.

Vanessa A. Countryman,

Secretary.

[FR Doc. 2020–00359 Filed 1–13–20; 8:45 am]

BILLING CODE 8011–01–P

SECURITIES AND EXCHANGE COMMISSION

[Release No. 34–87910; File No. S7–24–89]

Joint Industry Plan; Notice of Filing of the Forty-Seventh Amendment to the Joint Self-Regulatory Organization Plan Governing the Collection, Consolidation and Dissemination of Quotation and Transaction Information for Nasdaq-Listed Securities Traded on Exchanges on an Unlisted Trading Privileges Basis

January 8, 2020.

Pursuant to Section 11A of the Securities Exchange Act of 1934 (''Act'') [1] and Rule 608 of Regulation National Market System (''NMS'') thereunder,[2] notice is hereby given that on November 25, 2019,[3] the Participants [4] in the Joint Self-

[1] 15 U.S.C. 78k–1(a)(3).

[2] 17 CFR 242.608.

[3] *See* Letter from Robert Books, Chairman, Operating Committee, Nasdaq/UTP Plan, to Vanessa Countryman, Secretary, Commission, dated November 19, 2019 (''Transmittal Letter'').

[4] The Participants are the national securities association and national securities exchanges that submit trades and quotes to the Plan and include: Cboe BYX Exchange, Inc., Cboe BZX Exchange, Inc., Cboe EDGA Exchange, Inc., Cboe EDGX Exchange, Inc., Cboe Exchange, Inc., Financial Industry Regulatory Authority, Inc., The Investors' Exchange LLC, Long-Term Stock Exchange, Inc., Nasdaq BX, Inc., Nasdaq ISE, LLC, Nasdaq PHLX, Inc., The Nasdaq Stock Market LLC, New York Stock Exchange LLC, NYSE American LLC, NYSE Arca, Inc., NYSE Chicago, Inc., and NYSE National, Inc.

Regulatory Organization Plan Governing the Collection, Consolidation and Dissemination of Quotation and Transaction Information for Nasdaq-Listed Securities Traded on Exchanges on an Unlisted Trading Privileges Basis (''Nasdaq/UTP Plan'' or ''Plan'') filed with the Securities and Exchange Commission (''SEC'' or ''Commission'') a proposal to amend the Nasdaq/UTP Plan.[5] The amendment represents the Forty-Seventh Amendment to the Plan (''Amendment''). As described in the Amendment, the Participants propose to adopt a confidentiality policy to provide guidelines for the Operating Committee and the Advisory Committee of the Plan, and all subcommittees thereof, regarding the confidentiality of any data or information generated, accessed, or transmitted to the Operating Committee, as well as discussions occurring at a meeting of the Operating Committee or any subcommittee. According to the Participants, the confidentiality policy is designed broadly (i) to protect against any potential misuse of confidential information, which includes, but is not limited to, protecting confidential information obtained or generated by the Administrator and Processor in connection with the operation of the Plan as well as (ii) to allow the Operating Committee to disclose confidential information to the Advisory Committee to obtain its input without concern that such confidential information may be shared beyond the Advisory Committee. The Participants believe that the proposed Amendment will allow for more sharing of information with the Advisory Committee regarding the operation of the Plan and elicit more input by the Advisory Committee on Plan matters that might otherwise be deemed confidential.[6]

The proposed Amendment has been filed by the Participants pursuant to Rule 608(b)(2) under Regulation NMS.[7] The Commission is publishing this notice to solicit comments from interested persons on the proposed Amendment.

The Commission notes that, contemporaneously with the issuance of this notice, it has issued a notice of proposed order (''Governance Notice'')[8] soliciting public comment on a proposed order that would direct the national securities exchanges and the Financial Industry Regulatory Authority, Inc. (collectively, ''SROs'') to act jointly in developing and filing with the Commission a proposed new single national market system plan, which will replace the existing national market system plans that govern the public dissemination of real-time, consolidated equity market data for national market system stocks (''Equity Data Plans''). The Commission stated in the Governance Notice its view that, among other concerns,

> [i]n the operation of the Equity Data Plans, Participants and Participant representatives have been privy to confidential and proprietary information of substantial commercial or competitive value, including, among other things, information about core data usage, the [securities information processors' or] SIPs' customer lists, financial information, and subscriber audit results. However, the terms of the Equity Data Plans do not address commercial use of confidential or proprietary information by the Participants.[9]

The Governance Notice solicits public comment on a proposed order that would direct the SROs to include provisions in the New Data Plan (as defined in the Governance Notice) addressing several issues arising from the current governance structure of the Plan, and discusses the Commission's view that the new data plan should include provisions regarding the treatment of confidential information.

In addition, contemporaneously with the publication of notice of the Amendment set forth below, the Commission also is publishing a separate proposed amendment from the Plan concerning a conflicts of interest policy.

I. Text of the Amendment

Set forth below is the entirety of the Amendment submission that the Participants filed with the Commission, which includes a statement of the purpose and summary of the Amendment, along with the information required by Rules 608(a) and 601(a) under the Act.[10]

A. Purpose of the Amendment

1. Background

Under the provisions of the Plan, the Advisory Committee has the right to attend all meetings of the Operating Committee and receive any information concerning Plan matters distributed to the Operating Committee. The Advisory Committee also can attend meetings of most subcommittees. The Operating Committee, however, may meet in Executive Session without the Advisory Committee to discuss items that require confidential treatment, as determined by majority vote of the Operating Committee. Last year, the Participants adopted an Executive Session Policy, which provides a specified list of topics that are appropriate for Executive Session. Those topics include:

- Fees that require discussion of confidential financial information;
- subscriber audit findings;
- discussions that require the disclosure of Material Non-Public Information;
- financial reports containing confidential financial information;
- the portion of a discussion or evaluation of administrator and processor performance that includes confidential, non-public information;
- contract negotiations, awards, and revocations that contain non-public information;
- Advisory Committee member selection;
- litigation matters; and
- confidential, non-public discussions with the SEC.

The Participants currently use Executive Sessions sparingly to discuss confidential information. When used, the Executive Session usually lasts less than thirty minutes and is used to discuss a limited set of topics, often consisting of a single, discrete topic. Although the Executive Session is sparingly used, the Participants are now seeking additional ways to include the Advisory Committee in more discussions and to share additional confidential information with the Advisory Committee.

Therefore, the Participants are proposing a confidentiality policy to

(each a ''Participant'' and collectively, the ''Participants''). Participants also are members of the Plan's Operating Committees. Other parties include the ''Processor,'' who is charged with collecting, processing and preparing for distribution or publication all Plan information. The ''Administrator'' is charged with administering the Plan to include data feed approval, customer communications, contract management, and related functions. ''Advisory Committee members'' are individuals who represent particular types of financial services firms or actors in the securities market, and who were selected by Plan participants to be on the Advisory Committee A list of the Processor, Administrator, and Advisory Committee members is available at *http://www.utpplan.com/governance.*

[5] The Plan governs the collection, processing, and dissemination on a consolidated basis of quotation information and transaction reports in Eligible Securities for its Participants. This consolidated information informs investors of the current quotation and recent trade prices of Nasdaq securities. It enables investors to ascertain from one data source the current prices in all the markets trading Nasdaq securities. The Plan serves as the required transaction reporting plan for its Participants, which is a prerequisite for their trading Eligible Securities. *See* Securities Exchange Act Release No. 55647 (April 19, 2007), 72 FR 20891 (April 26, 2007).

[6] *See* Transmittal Letter at 1.

[7] 17 CFR 242.608(b)(2).

[8] *See* Securities Exchange Act Release No. 87906 (January 8, 2020).

[9] *Id.* at A–67 (footnotes omitted).

[10] *See* 17 CFR 242.608(a)(4) and (a)(5).

allow the Operating Committee to share confidential information with the Advisory Committee without concern that such information would be more broadly disseminated. By sharing information that would in the ordinary course be considered appropriate for confidential treatment, the Participants believe that the Advisory Committee will be able to provide more informed advice and recommendations with respect to the operation and governance of the Plan. Further, the confidentiality policy is designed to protect against any potential misuse of confidential information by: (1) Restricting the use and dissemination of customer-related information; (2) requiring the Administrator and Processor to maintain confidential information policies that will be reviewed by the Operating Committee at least every two years; (3) permitting disclosure of confidential information by a representative of a Participant to other employees or agents of the Participant or its affiliates only as needed to perform that representative's function on behalf of the Participant; and (4) setting clear procedures regarding the treatment of various forms of confidential information.

The Participants discussed this proposal extensively with the Advisory Committee and this proposal reflects input and comments from the members of the Advisory Committee.

2. Proposed Confidentiality Policy

In an effort to expand the information that the Operating Committee may provide to the Advisory Committee, and also to provide guidelines about what information can and cannot be shared outside the meetings of the Operating Committee, the Participants are proposing to adopt a confidentiality policy.

The proposed confidentiality policy would apply to all representatives of the Participants, Pending Participants, the UTP Administrator and Processor, and the Advisory Committee. Additionally, it would apply to agents of the Operating Committee, including, but not limited to, attorneys, advisors, accountants, contractors or subcontractors (''Agents''), as well as any third parties invited to attend meetings of the Operating Committee or Plan subcommittees. These persons are collectively defined in the confidentiality policy as ''Covered Persons.'' [11]

The proposed confidentiality policy creates three categories of confidential information: (1) Restricted Information; (2) Highly Confidential Information; and (3) Confidential Information. Restricted Information is defined as (i) highly sensitive customer-specific financial information, (ii) customer-specific audit information, (iii) other customer financial information, and (iv) Personal Identifiable Information. Highly Confidential Information is defined as (i) any data or information shared in an Executive Session or that would otherwise qualify for confidential treatment pursuant to the Plan's Executive Session Policy; [12] and (ii) any other highly sensitive Participant-specific, customer-specific, individual-specific, or otherwise sensitive information relating to the Operating Committee, Participants, or customers that is not otherwise Restricted Information. Highly Confidential Information includes: A Participant's contract negotiations with the Processor or Administrator; personnel matters; information concerning the intellectual property of Participants or customers; and any document subject to the Attorney-Client Privilege or Work Product Doctrine. Finally, Confidential Information is defined as (i) any non-public data or information designated as Confidential by a majority vote of the Operating Committee; (ii) any document generated by a Participant or Advisor and designated by that Participant or Advisor as Confidential; (iii) the minutes of the Operating Committee or any subcommittee thereof unless approved by the Operating Committee for release to the public; and (iv) the individual views and statements of Covered Persons and SEC staff disclosed during a meeting of the Operating Committee or any subcommittees thereunder.

The confidentiality policy outlines the procedures with respect to identifying documents as Restricted, Highly Confidential, or Confidential as well as the procedures regarding how to treat documents and information in each category. With respect to general procedures, the confidentiality policy places the obligation on the Administrator and the Processor to be the custodian of all documents and to maintain the classification of such documents. The Administrator will ensure that all documents are properly labeled with the appropriate category. The Administrator may, under delegated authority, designate documents as Restricted, Highly Confidential, or Confidential, which will be determinative unless altered by a majority vote of the Operating Committee. Finally, all contracts between the Operating Committee and its Agents will require the Operating Committee information to be treated as Confidential Information that may not be disclosed to third parties, except as necessary to effect the terms of the contract or as required by law.

3. Procedures Governing Restricted Information

With respect to Restricted Information, the proposed confidentiality policy provides that such information will be kept in confidence by the Administrator and Processor and will not be disclosed to the Operating Committee or any subcommittee thereof, or during Executive Session, or the Advisory Committee, except in the following circumstances:

1. If an Administrator determines that it is appropriate to share a customer's financial information with the Operating Committee or a subcommittee thereof, the Administrator will first anonymize the information by redacting the customer's name and any other information that may lead to the identification of the customer.

2. The Administrator may disclose the identity of a customer that is the subject of the Restricted Information in Executive Session only if the Administrator determines in good faith that it is necessary to disclose the customer's identity in order to obtain input or feedback from the Operating Committee or a subcommittee thereof about a matter of importance to the Plan. In such an event, the Administrator will change the designation of the information at issue from ''Restricted Information'' to ''Highly Confidential Information.''

3. The Administrator may share Restricted Information related to any willful, reckless, or grossly negligent conduct by a customer discovered by the Administrator with the UTP Administrator or with the SEC, as appropriate, upon majority vote of the Operating Committee in Executive Session, provided that, in any report by the Administrator during Executive Session related to such disclosure, the Administrator anonymizes the information related to the wrongdoing

[11] Covered Persons would not include staff of the Commission.

[12] Although Highly Confidential Information includes data or information shared in an Executive Session, the Participants plan on including more information in General Session rather than Executive Session. The proposed confidentiality policy allows the Participants to share more sensitive information with the Advisory Committee without concerns that such information would be more broadly disseminated. Therefore, the Participants intend to share additional information, previously designated for Executive Session, with the Advisory Committee, including confidential financial information.

by removing the names of the party or parties involved, as well as any other information that may lead to the identification of such party or parties.

The Participants believe that the procedures governing Restricted Information will ensure the protection of customer identities and customer-related information, and such information will be disclosed only when necessary to conduct Plan-related business.

4. Procedures Governing Highly Confidential Information

With respect to Highly Confidential Information, the proposed confidentiality policy provides that such information may be disclosed only in Executive Session of the Operating Committee or to the Legal Subcommittee. Highly Confidential Information may also be disclosed to SEC staff, unless it is protected by the Attorney-Client Privilege or the Work Product Doctrine. Any disclosure of Highly Confidential Information to SEC staff will be accompanied by a FOIA Confidential Treatment Request. The confidentiality policy does not permit any other disclosure of Highly Confidential Information.

In addition, a Covered Person that is a representative of a Participant may disclose Highly Confidential Information to other employees or agents of the Participant or its affiliates only as needed for such Covered Person to perform his or her function on behalf of the Participant, as reasonably determined by the Covered Person. A copy of the confidentiality policy will be made available to recipients of such information who are employees or agents of a Participant or its affiliates that are not Covered Persons, who will be required to abide by the confidentiality policy.

Further, because of the heightened concerns regarding the disclosure of Highly Confidential Information, in the event a Covered Person is determined by a majority vote of the Operating Committee to have disclosed Highly Confidential Information, the Operating Committee will determine the appropriate remedy for the breach based on the facts and circumstances of the event. For the representatives of a Participant, appropriate remedies include a letter of complaint submitted to the SEC, which may be made public by the Operating Committee. For a member of the Advisory Committee, appropriate remedies include removal of that member from the Advisory Committee.

5. Procedures Governing Confidential Information

Under the proposed confidentiality policy, Confidential Information may be disclosed to the Operating Committee, any subcommittee thereof, and the Advisory Committee. A Covered Person may not disclose Confidential Information to any individual that is not either a Covered Person or a member of the SEC staff, except with authorization of the Operating Committee, or as may be otherwise required by law. The Operating Committee or a subcommittee thereof may authorize the disclosure of Confidential Information by an affirmative vote of the number of members that represent a majority of the total number of members of the Operating Committee or subcommittee. However, with respect to Confidential Information that is generated by a Participant or member of the Advisory Committee, the Operating Committee may authorize its disclosure only with the consent of such Participant or member of the Advisory Committee.

In order to elicit industry feedback, members of the Advisory Committee may be authorized by the Operating Committee to disclose particular Confidential Information to enable them to consult with third-party industry representatives or technical experts, provided that the member of the Advisory Committee takes any steps requested by the Operating Committee to prevent further dissemination of that Confidential Information, including providing the individuals consulted with a copy of the confidentiality policy and requesting that person to maintain the confidentiality of such information in a manner consistent with the confidentiality policy.

A Covered Person that is a representative of a Participant may disclose Confidential Information to other employees or agents of the Participant or its affiliates only as needed for such Covered Person to perform his or her function on behalf of the Participant, as reasonably determined by the Covered Person. A copy of the confidentiality policy will be made available to recipients of such information who are employees or agents of a Participant or its affiliates that are not Covered Persons, who will be required to abide by the confidentiality policy.

A Covered Person may disclose his or her own individual views and statements that may otherwise be considered Confidential Information without obtaining authorization of the Operating Committee provided that the Covered Person is not disclosing the views or statements of any other Covered Person or Participant that are considered Confidential Information.

Finally, a Covered Person that discloses Confidential Information without the authorization of the Operating Committee will report such disclosure to the Chair of the Operating Committee. Such unauthorized disclosure of Confidential Information will be recorded in the minutes of the meeting of the Operating Committee and will contain: (a) The name(s) of the person(s) who disclosed such Confidential Information, and (b) a description of the Confidential Information disclosed. The name(s) of the person(s) who disclosed such Confidential Information will also be recorded in any publicly available summaries of Operating Committee minutes.

B. Governing or Constituent Documents

Not applicable.

C. Implementation of Amendment

Each of the Participants has approved the amendment in accordance with Section IV.C of the UTP Plan. The Participants also received and incorporated feedback from the Advisory Committee in preparing the confidentiality policy.

D. Development and Implementation Phases

Not applicable.

E. Analysis of Impact on Competition

The Participants believe that the proposed amendment does not impose any burden on competition that is not necessary or appropriate in furtherance of the purposes of the Act.

The Participants believe that the proposed confidentiality policy will provide enhanced disclosure to the Advisory Committee regarding matters that the Participants consider confidential information. Currently, the Plan allows information to be discussed in Executive Session when the Operating Committee determines that an item of Plan business requires confidential treatment. Despite the confidential nature of the information, the Participants believe that inclusion of the Advisory Committee in certain discussions that involve confidential information would be beneficial for the operation and governance of the Plan.

The confidentiality policy allows such information to be more freely shared with the Advisory Committee without concerns that the confidential information will be disseminated more broadly. Additionally, the confidentiality policy provides guidance

to the representatives of Participants on how to treat confidential information that they obtained through the course of participating on the Operating Committee, thereby reducing confusion among the representatives of the Participants. Finally, by requiring Agents of the Operating Committee to adhere to the confidentiality policy, the confidentiality policy will ensure that such Agents will be subject to the same requirements as the Operating Committee when handling confidential information.

Additionally, the proposed confidentiality policy will protect customer-specific information in the possession of the Administrator and Processor. The procedures surrounding the use of Restricted Information will help to ensure that the dissemination of Restricted Information is limited to instances when necessary for the operation of the Plan. Further, the confidentiality policy requires the Administrator and Processor to establish written confidential information policies that provide for the protection of information under their control. Therefore, the confidentiality policy is designed to protect confidential information obtained or generated by the Administrator and Processor in connection with the operation of the Plan.

Finally, as noted above, the proposal was vetted With the Advisory Committee to include its input into a policy that would enhance the amount of information available to the Advisory Committee.

F. Written Understanding or Agreement Relating to Interpretation of, or Participating in Plan

Not applicable.

G. Approval by Sponsors in Accordance With Plan

Section IV.C.1 of the UTP Plan require the Participants to unanimously approve the amendment proposed herein. They have so approved it.

H. Description of Operation of Facility Contemplated by the Proposed Amendment

Not applicable.

I. Terms and Conditions of Access

Not applicable.

J. Method of Determination and Imposition and Amount of, Fees and Charges

Not applicable.

K. Method and Frequency of Processor Evaluation

Not applicable.

L. Dispute Resolution

Not applicable.

II. Regulation NMS Rule 601(a)

A. Equity Securities for Which Transaction Reports Shall be Required by the Plan

Not applicable.

B. Reporting Requirements

Not applicable.

C. Manner of Collecting, Processing, Sequencing, Making Available and Disseminating Last Sale Information

Not applicable.

D. Manner of Consolidation

Not applicable.

E. Standards and Methods Ensuring Promptness, Accuracy and Completeness of Transaction Reports

Not applicable.

F. Rules and Procedures Addressed to Fraudulent or Manipulative Dissemination

Not applicable.

G. Terms of Access to Transaction Reports

Not applicable.

H. Identification of Marketplace of Execution

Not applicable.

III. Solicitation of Comments

The Commission seeks comments on the Amendment. Interested persons are invited to submit written data, views, and comments concerning the foregoing, including whether the Amendment is consistent with the Act and the rules thereunder. Among other things, the Commission asks commenters to consider whether the Amendment to the current Plan addresses the concerns outlined in the Governance Notice or whether they should be further enhanced regarding the identification and protection of confidential information. Accordingly, the Commission requests comments on matters including, but not limited to, the following:

1. Do commenters believe that Participants involved in the operation or governance of each Plan have, by consequence of their position, access to information of substantial commercial and competitive value? If so, do commenters believe that certain of that information, including customer-specific financial information, customer-specific audit information, personally identifiable information, and information concerning the intellectual property of Participants or customers, is highly sensitive to such a degree that its possession and use should be more tightly controlled? Please explain. For example, should the Amendment require logs and written attestations when a Covered Person shares Highly Confidential Information with other employees or agents of the Participant or its affiliates? Do commenters believe the Amendment should specifically address commercial use of information that is of substantial competitive value?

2. Do commenters believe that Participants' representatives should be subject to restrictions and/or information barriers as part of the confidentiality policy to address their direct or indirect involvement in the development or sale of proprietary data products to SIP customers? For example, do commenters believe that Participants' access to a list of the Processor's customers as well as information on those customers' data usage and fees paid to the Plan has competitive implications? Do commenters believe that the Plan should require recusal in certain circumstances (*e.g.,* during Executive Sessions or Operating Committee meetings) because the potential for misuse of competitively sensitive confidential information is too great? If so, what should those circumstances be? Do commenters believe that any Participant or Advisory Committee member that is directly involved in the management, sale, or development of similar proprietary market data products that may be sold to customers of the SIPs should have access to any customer information from the SIPs? Do commenters believe that Operating Committee members, as well as the Administrator, Processor, and auditor should be prohibited, unless otherwise required by law, from sharing confidential information with individuals that are not involved with the operation of the Plan and individuals employed by or affiliated with the same entity if such individuals are involved in the management, sale, or development of proprietary data products that are offered separately to a substantially similar customer base, *i.e.,* customers or potential customer of the SIPs? Would these concerns also be present for the sale of related data products that are supplemental to SIP data?

3. Do commenters believe that the Plan should require all Participants and other Covered Persons to establish, maintain, and enforce policies and procedures to safeguard confidential and proprietary information received via their participation in the Plan and to

prevent its misuse by such Participants or entities controlling, controlled by, or under common control with such Participants? If so, do commenters believe the proposed Amendment sufficiently achieves that goal?

4. Do commenters believe the proposed guidelines and procedures for identifying and categorizing types of confidential information, including for providing increasing degrees of protection for more sensitive types of confidential information, provide sufficient detail and a sufficiently comprehensive process and procedures to identify, classify, and subsequently protect confidential information? Or do commenters believe that further efforts are necessary to identify, categorize, and protect confidential information and/or information of substantial competitive or commercial value? Do commenters believe that a need may arise for information or data that are not initially categorized as confidential to be categorized as such at a later point in time and, if so, what should the process be for doing so? For example, should the Operating Committee be able to classify or de-classify material as appropriate based on a majority vote?

5. Do commenters believe that the Administrator and Processor should be solely responsible for classifying material according to the proposed standards? Or do commenters believe the decisions of the Administrator and Processor should be subject to review, for example upon the request of a member of the Operating Committee? Do commenters believe that potential conflicts of interest should preclude the Administrator and Processor from solely and independently making classification determinations in those circumstances when entities with which they are directly or indirectly affiliated separately offer proprietary data products to a substantially similar customer base, *i.e.,* customers or potential customers of the SIPs?

6. Do commenters believe that certain information or data generated, accessed, transmitted to, or discussed by the Operating Committee, such as information regarding contract negotiations with a potential new Processor, Administrator, auditor, or other third party service provider, should be designated as confidential and, if so, what level of confidentiality should such information be afforded?

7. Do commenters believe that information shared in Executive Sessions should be classified as Highly Confidential simply by virtue of it having been shared in an Executive Session, or should such information be classified based solely on its content and competitive sensitivity?

8. Do commenters believe that information that is not classified at some level of confidentiality should be considered public and may be shared freely outside of the Operating Committee? What specific information do commenters believe should be considered public and shared outside of the Operating Committee?

9. Do commenters believe that the proposed guidelines and procedures setting forth the circumstances in which disclosure of confidential information may be authorized are sufficiently clear and comprehensive? Do commenters believe that the proposed provisions allowing Participants to disclose confidential and highly confidential information to other employees or agents of the Participant or its affiliates as needed as they reasonably determine is appropriate? Or do commenters believe that, if a Participant is either employed by or affiliated with an entity that offers proprietary data products that are offered for sale to a substantially similar customer base (*i.e.,* customer or potential customers of the SIPs), that Participant should be required to develop policies and procedures that govern the sharing of confidential information? Do commenters believe such policies and procedures should be reviewed by the Operating Committee and Advisors and made publicly available via the Plan's website? Do commenters believe that the potential conflicts of interest involved and the difficulty of mitigating the potential harm and potential burdens on competition are so great that Participants should be explicitly prohibited from disclosing restricted and confidential information at all or only if authorized to do so on a case-by-case basis from the Operating Committee, unless such disclosure is otherwise required by law? If disclosure is required by law, should the Covered Person be required to first notify the Operating Committee (*e.g.,* to provide the Operating Committee with an opportunity to redact information if permitted by applicable law or to dispute the requirement to provide in its entirety)?

10. Do commenters believe that certain confidential information may become less sensitive if it is anonymized and aggregated? If so, do commenters believe that certain types of restricted or highly confidential information could be anonymized and aggregated to the point where it could be classified as public? What methodology for anonymizing confidential information would commenters suggest, and should the methodology be standardized such that the Administrator, Processor, and auditor all follow a consistent practice for anonymizing such information? Do commenters believe that certain information is so sensitive, whether anonymized or not, that it should never be shared outside of the Operating Committee or outside of the Administrator?

11. Do commenters believe that the scope of the proposed Amendment is sufficiently comprehensive to cover all parties that might have access to confidential information, or should the scope be broadened to apply to additional classes of persons? For example, should outsourced service providers (including, but not limited to, firms and persons that provide audit services, accounting services, or legal services to the Plan, the Administrator, or the Processor) be subject to additional restrictions, particularly if they are directly or indirectly affiliated with a Participant, the Administrator, the Processor, or any entity that offers separately proprietary data products to a substantially similar customer base, *i.e.,* customers or potential customers of the SIPs? If so, should the Plan explicitly preclude itself from engaging with an Administrator, Processor, auditor, or any agents or third parties thereof, unless the entity establishes, maintains, and enforces policies and procedures to safeguard confidential and proprietary information and to prevent its direct or indirect misuse? If so, should the Operating Committee review those policies and procedures and/or should they be made public (*i.e.,* provided on the Plan's website)? For example, if the Administrator oversees a Plan's audit function (directly or through an agent or third party) but also is affiliated with an entity that sells proprietary data products to SIP customers, do commenters believe that potential conflicts of interest should preclude the Administrator from independently determining its own confidential information policies as they apply to the audit function? Or, should such policies be subject to review and approval by the Operating Committee, and be posted publicly, to help ensure their adequacy and completeness?

12. Do commenters believe that Advisory Committee members need access to sensitive information of substantial commercial and competitive value in order to perform their duties? Do commenters believe that the Advisory Committee members need access to underlying information relied on by the Participants when making

decisions on funding of and improvements for the SIPs?

13. Do commenters believe the proposed remedy in the event that a Covered Person discloses ''Highly Confidential Information'' in a manner inconsistent with the proposed policy is sufficient, or should any other consequences of such disclosure be provided?

14. Similarly, do commenters believe the Amendment would sufficiently deter unauthorized disclosure of ''Confidential Information'' by a Covered Person without authorization by the Operating Committee? Do commenters believe appropriate remedies for Participants and Advisors should differ, or should potential remedies for Participants that disclose confidential information also include the possibility of removal of that Participant from the Operating Committee?

Comments may be submitted by any of the following methods:

Electronic Comments

- Use the Commission's internet comment form (*http://www.sec.gov/rules/sro.shtml*); or
- Send an email to *rule-comments@sec.gov.* Please include File Number S7–24–89 on the subject line.

Paper Comments

- Send paper comments in triplicate to Secretary, Securities and Exchange Commission, 100 F Street NE, Washington, DC 20549–1090.

All submissions should refer to File Number S7–24–89. This file number should be included on the subject line if email is used. To help the Commission process and review your comments more efficiently, please use only one method. The Commission will post all comments on the Commission's website (*http://www.sec.gov/rules/sro.shtml*). Copies of the submission, all written statements with respect to the proposed Amendment that are filed with the Commission, and all written communications relating to the proposed Amendment between the Commission and any person, other than those that may be withheld from the public in accordance with the provisions of 5 U.S.C. 552, will be available for website viewing and printing in the Commission's Public Reference Room, 100 F Street NE, Washington, DC 20549, on official business days between the hours of 10:00 a.m. and 3:00p.m. Copies of the filing also will be available for website viewing and printing at the principal office of the Plan. All comments received will be posted without change. Persons submitting comments are cautioned that we do not redact or edit personal identifying information from comment submissions. You should submit only information that you wish to make available publicly. All submissions should refer to File Number S7–24–89 and should be submitted on or before February 4, 2020.

By the Commission.

Vanessa A. Countryman,

Secretary.

[FR Doc. 2020–00358 Filed 1–13–20; 8:45 am]

BILLING CODE 8011–01–P

SECURITIES AND EXCHANGE COMMISSION

[Release No. 34–87918/January 9, 2020]

Order Making Fiscal Year 2020 Annual Adjustments to Transaction Fee Rates

I. Background

Section 31 of the Securities Exchange Act of 1934 (''Exchange Act'') requires each national securities exchange and national securities association to pay transaction fees to the Commission.[1] Specifically, Section 31(b) requires each national securities exchange to pay to the Commission fees based on the aggregate dollar amount of sales of certain securities (''covered sales'') transacted on the exchange.[2] Section 31(c) requires each national securities association to pay to the Commission fees based on the aggregate dollar amount of covered sales transacted by or through any member of the association other than on an exchange.[3]

Section 31 of the Exchange Act requires the Commission to annually adjust the fee rates applicable under Sections 31(b) and (c) to a uniform adjusted rate.[4] Specifically, the Commission must adjust the fee rates to a uniform adjusted rate that is reasonably likely to produce aggregate fee collections (including assessments on security futures transactions) equal to the regular appropriation to the Commission for the applicable fiscal year.[5]

The Commission is required to publish notice of the new fee rates under Section 31 not later than 30 days after the date on which an Act making a regular appropriation for the applicable fiscal year is enacted.[6] On December 20, 2019, the President signed into law the Consolidated Appropriations Act, 2020, which includes total appropriations of $1,825,525,000 to the SEC for fiscal year 2020.

II. Fiscal Year 2020 Annual Adjustment to the Fee Rate

The new fee rate is determined by (1) subtracting the sum of fees estimated to be collected prior to the effective date of the new fee rate[7] and estimated assessments on security futures transactions to be collected under Section 31(d) of the Exchange Act for all of fiscal year 2020[8] from an amount equal to the regular appropriation to the Commission for fiscal year 2020, and (2) dividing by the estimated aggregate dollar amount of covered sales for the remainder of the fiscal year following the effective date of the new fee rate.[9]

As noted above, the Consolidated Appropriations Act, 2020, includes total appropriations of $1,825,525,000 to the Commission for fiscal year 2020.[10] The Commission estimates that it will collect $798,679,778 in fees for the period prior to the effective date of the new fee rate and $26,122 in assessments

---

[1] 15 U.S.C. 78ee.

[2] 15 U.S.C. 78ee(b).

[3] 15 U.S.C. 78ee(c).

[4] In some circumstances, the SEC also must make a mid-year adjustment to the fee rates applicable under Sections 31(b) and (c).

[5] 15 U.S.C. 78ee(j)(1) (the Commission must adjust the rates under Sections 31(b) and (c) to a ''uniform adjusted rate that, when applied to the baseline estimate of the aggregate dollar amount of sales for such fiscal year, is reasonably likely to produce aggregate fee collections under [Section 31] (including assessments collected under [Section 31(d)]) that are equal to the regular appropriation to the Commission by Congress for such fiscal year.'').

[6] 15 U.S.C. 78ee(g).

[7] The sum of fees to be collected prior to the effective date of the new fee rate is determined by applying the current fee rate to the dollar amount of covered sales prior to the effective date of the new fee rate. The exchanges and FINRA have provided data on the dollar amount of covered sales through November, 2019. To calculate the dollar amount of covered sales from December, 2019 to the effective date of the new fee rate, the Commission is using a new methodology described further in this order and also in Appendix A of this order.

[8] Although the Commission is using a new methodology to calculate the baseline estimate of the aggregate dollar amount of covered sales, the Commission is using the same methodology it has used previously to estimate assessments on security futures transactions to be collected in fiscal year 2020. An explanation of the methodology appears in Appendix A.

[9] To estimate the aggregate dollar amount of covered sales for the remainder of fiscal year 2020 following the effective date of the new fee rate, the Commission is using the new methodology referenced above and further described in Appendix A of this order.

[10] The Consolidated Appropriations Act, 2020 includes an appropriation of $1,815,000,000 for necessary expenses for the Commission and an appropriation of $10,525,000 for costs associated with relocation under a replacement lease for the Commission's New York regional office facilities. The act provides that ''for purposes of calculating the fee rate under section 31(j) of the [Exchange Act] for fiscal year 2020, all amounts appropriated [to the Commission in the act] shall be deemed to be the regular appropriation to the Commission for fiscal year 2020.''

on round turn transactions in security futures products during all of fiscal year 2020. Using the methodology described in Appendix A, the Commission estimates that the aggregate dollar amount of covered sales for the remainder of fiscal year 2020 to be $46,381,289,295,437.

The uniform adjusted rate is computed by dividing the residual fees to be collected of $1,026,819,100 by the estimated aggregate dollar amount of covered sales for the remainder of fiscal year 2020 of $46,381,289,295,437; this results in a uniform adjusted rate for fiscal year 2020 of $22.10 per million.[11]

III. Effective Date of the Uniform Adjusted Rate

Under Section 31(j)(4)(A) of the Exchange Act, the fiscal year 2020 annual adjustments to the fee rates applicable under Sections 31(b) and (c) of the Exchange Act shall take effect on the later of October 1, 2019, or 60 days after the date on which a regular appropriation to the Commission for fiscal year 2020 is enacted.[12] The regular appropriation to the Commission for fiscal year 2020 was enacted on December 20, 2019, and accordingly, the new fee rates applicable under Sections 31(b) and (c) of the Exchange Act will take effect on February 18, 2020.

IV. New Methodology for the Baseline Estimate of the Aggregate Dollar Volume of Covered Sales

The methodology used to generate the baseline estimate of the aggregate dollar amount of covered sales is required to be developed by the Commission in consultation with the Congressional Budget Office (''CBO'') and the Office of Management and Budget (''OMB'').[13] The Commission recently completed a comprehensive review of the methodology and determined that modifications to the methodology would improve the accuracy of the estimates. The Commission consulted with CBO and OMB regarding the modifications to the methodology, as required under Section 31(l) of the Exchange Act. Consequently, the Commission has adopted the new methodology to generate the baseline estimate of the aggregate dollar volume of covered sales, which is used to determine the new fee rates. The methodology is explained in Appendix A of this order.

V. Conclusion

Accordingly, pursuant to Section 31 of the Exchange Act,

It is hereby ordered that the fee rates applicable under Sections 31(b) and (c) of the Exchange Act shall be $22.10 per $1,000,000 effective on February 18, 2020.

By the Commission.

Vanessa A. Countryman,

Secretary.

Appendix A

This appendix provides the methodology for determining the annual adjustment to the fee rates applicable under Sections 31(b) and (c) of the Exchange Act for fiscal year 2020. Section 31 of the Exchange Act requires the fee rates to be adjusted so that it is reasonably likely that the Commission will collect aggregate fees equal to its regular appropriation for fiscal year 2020.

To make the adjustment, the Commission must project the aggregate dollar amount of covered sales of securities on the securities exchanges and certain over-the-counter (''OTC'') markets over the course of the year. The fee rate equals the ratio of the Commission's regular appropriation for fiscal year 2020 (less the sum of fees to be collected during fiscal year 2020 prior to the effective date of the new fee rate and aggregate assessments on security futures transactions during all of fiscal year 2020) to the estimated aggregate dollar amount of covered sales for the remainder of the fiscal year following the effective date of the new fee rate.

For 2020, the Commission has estimated the aggregate dollar amount of covered sales by projecting forward the trend established in the previous decade. More specifically, the dollar amount of covered sales was forecasted for months subsequent to November 2019, the last month for which the Commission has data on the dollar volume of covered sales.[14]

The following sections describe this process in detail.

A. Baseline Estimate of the Aggregate Dollar Amount of Covered Sales for Fiscal Year 2020

First, calculate the average daily dollar amount of covered sales (''ADS'') for each month in the sample (February 2009–November 2019). The monthly total dollar amount of covered sales (exchange plus certain OTC markets) is presented in column C of Table A.

The model forecasts the monthly moving average of the average daily dollar amount of covered sales. Each month's average daily dollar amount of covered sales is calculated by dividing the total covered sales for that month (column C of Table A) by the number of trading days for that month (column B of Table A). These amounts are shown in column D of Table A. The moving average will span the same number of months required to be forecast for the remainder of the fiscal year. The trailing moving average used in the forecast model is presented in column E of Table A.

To capture the recent trends in the monthly changes in the moving averages, calculate the 1-month and 2-month lags of the trailing moving average shown in column E in Table A. These amounts are shown in columns F and G, respectively, of Table A.

Next, model the monthly trailing moving average of ADS as function of a constant term and the two lagged trailing moving averages using the ordinary least squares technique.

Use the estimated model to forecast the trailing moving average of ADS of the first month after the last available monthly data. Estimate the trailing moving average of the second month using the forecasted value of the first month and the actual value of the month before that. Similarly, estimate the trailing moving average of the third month using the forecasted values of the two previous months. Continue in this fashion until the end of the fiscal year.

The estimate of the trailing moving average ADS for the last applicable month in the fiscal year is a prediction of the moving average for those months that need to be predicted. This estimate is used as the predicted value of ADS for each month in the forecast period; to obtain the forecast total covered sales for each month, multiply the predicted ADS by the number of days in each month.

The following is a more formal (mathematical) description of the procedure:

1. Begin with the monthly data for total dollar volume of covered sales

[11] Appendix A shows the process of calculating the fiscal year 2020 annual adjustment and includes the data used by the Commission in making this adjustment.

[12] 15 U.S.C. 78ee(j)(4)(A).

[13] 15 U.S.C. 78ee(l).

[14] To determine the availability of data, the Commission compares the date of the appropriation with the date the transaction data are due from the exchanges (10 business days after the end of the month). If the business day following the date of the appropriation is equal to or subsequent to the date the data are due from the exchanges, the Commission uses these data. The appropriation was signed on December 20, 2019. The first business day after this date was December 23, 2019. Data for November 2019 were due from the exchanges on December 13, 2019. As a result, the Commission used November 2019 and earlier data to forecast volume for December 2019 and later months.

(column C). The sample spans ten years, from February 2009–November 2019.[15] Divide each month's total dollar volume by the number of trading days in that month (column B) to obtain the average daily dollar volume (ADS, column D).

2. For each month *t,* calculate the 9-month trailing moving average of ADS (shown in column E). For example, the value for October 2010 is the average of the 9 months ending in October, 2010, or February 2010 through October 2010 inclusive.

3. Calculate the 1-month and 2-month lags of the trailing moving average. For example, the 1-month lag of the 9-month trailing moving average for October, 2010 is equal to the 9-month trailing moving average for September, 2010. The 2-month lag of the 9-month trailing moving average for October 2010 is equal to the 9-month trailing moving average for August 2010. These are shown in columns F and G.

4. Estimate the model using ordinary least squares:

$$y_t = \alpha + \beta_1 y_{t-1} + \beta_2 y_{t-2} + u_t$$

Where y_t is the 9-month trailing moving average of the average daily sales for month t, and y_{t-1} and y_{t-2} are the 1-month and 2-month lags of y_t, and u_t representing the error term for month t. The model can be estimated using standard commercially available software. The estimated parameter values are $\hat{\alpha} = 3{,}776{,}474{,}199$, $\hat{\beta}_1 = +1.4834$ and $\hat{\beta}_2 = -0.49513$. The root-mean squared error (RMSE) of the regression is 4,771,330,095.

5. The predicted value of the 9-month trailing moving average of the last month to be forecast represents the final forecast of covered sales for the entire prediction period. This value is shown in column H. This represents the prediction for August of 2020. To calculate this value from the model above, one needs the 1-month and 2-month lag of the 9-month trailing moving average ADS, *i.e.,* the 9-month trailing moving average for June and July. The 9-month trailing moving average for July is obtained by using the 1-month and 2-month lags for July, that is, the 9-month trailing moving averages for June and May. To arrive at all the necessary inputs, one begins with the first month to be forecast, in this case, December 2019, and iterates predictions forward until the last month is predicted. One then multiplies the final predicted 9-month trailing moving average ADS by the number of days in each month to arrive at the forecast total dollar amount of covered sales. This is shown in column I.

6. For example, for December 2019, using the $\hat{\alpha}$, $\hat{\beta}_1$, and $\hat{\beta}_2$ parameters shown above, along with the 1-month and two-month lags in the 9-month trailing moving average ADS (representing the 9-month trailing moving average ADS for November and October 2019, respectively), one can estimate the forecast 9-month trailing moving average ADS for December: $3{,}776{,}474{,}199 + (1.4834 \times 343{,}446{,}332{,}375) + (-0.49513 \times 344{,}795{,}734{,}916) = 342{,}525{,}566{,}044$.

7. With the estimated 9-month trailing moving average ADS for December 2019 calculated above, one can estimate the 9-month trailing moving average ADS for January, 2020. The estimate obtained from December becomes the 1-month lag for January, and the 1-month lag used in the December forecast becomes the 2-month lag for the January forecast. Thus, the predicted 9-month trailing moving average ADS for January 2020 is calculated as: $3{,}776{,}474{,}199 + (1.4834 \times 342{,}525{,}566{,}044) + (-0.49513 \times 343{,}446{,}332{,}375) = 341{,}827{,}831{,}235$.

8. Using the forecasts for December and January, one can estimate the value for February. Repeat this procedure for subsequent months, until the estimate for August 2020 is obtained. This value is 338,549,556,901.[16] This value is then used to calculate the final forecast total monthly covered sales for all 9 months from December 2019 through August 2020.

9. To obtain the estimate of total monthly covered sales for each month, multiply the number of trading days in the month, shown in column B in Table A, by the final forecast 9-month trailing moving average ADS, shown in column H of Table A. This product is shown in column I of Table A, and these figures are used to calculate the new fee rate.

B. Using the Forecasts From A To Calculate the New Fee Rate

1. Use Table A to estimate fees collected for the period September 1, 2019 through February 17, 2020. The projected aggregate dollar amount of covered sales for this period is $38,583,564,152,842. Actual and projected fee collections at the current fee rate of $20.70 per million are $798,679,778.

2. Estimate the amount of assessments on security futures products collected from September 1, 2019 through August 31, 2020. First, calculate the average and the standard deviation of the change in log average daily sales, in column E, for the 120 months ending December 2019. The average is 0.00293464 and the standard deviation is 0.11329321. These are used to estimate an average growth rate in ADS using the formula $\exp(0.00293464 + \frac{1}{2}0.11329321^2) - 1$. This results in an average monthly increase of 0.93962%. Apply this monthly increase to the last month for which single stock futures' assessments are available, which was $2,068.87, for November 2019. Estimate all subsequent months in fiscal year 2020 by applying the growth rate to the previously estimated monthly value, and sum the results. This totals $26,122.20 for the entire fiscal year.

3. Subtract the amounts $798,679,778 and $26,122 from the target off-setting collection amount set by Congress of $1,825,525,000, leaving $1,026,819,100 to be collected on dollar volume for the period February 18, 2020 through August 31, 2020.

4. Use Table A to estimate dollar volume for the period February 18, 2020 through August 31, 2020. The estimate is $46,381,289,295,437. Finally, compute the fee rate required to produce the additional $1,026,819,100 in revenue. This rate is $1,026,819,100 divided by $46,381,289,295,437 or 0.00002213865.

5. Round the result to the seventh decimal point, yielding a rate of 0.0000221 (or $22.10 per million).

This table summarizes the estimates of the aggregate dollar amount of covered sales, by time period. The figures in this table can be used to determine the new fee rate.

[15] Because the model uses a two period lag in the 9-month trailing moving average of average daily covered sales, ten additional months of data are added to the table so that the model is estimated with 120 observations.

[16] One obtains insignificantly different values using the rounded parameter estimates shown above. The predicted ADS values displayed above represents the full precision estimate.

TABLE A—BASELINE ESTIMATE OF THE AGGREGATE DOLLAR AMOUNT OF SALES

Fee rate calculation	
a. Baseline estimate of the aggregate dollar amount of sales, 09/01/2019 to 01/31/2020 ($Millions)	$35,198,069
b. Baseline estimate of the aggregate dollar amount of sales, 02/01/2020 to 02/17/2020 ($Millions)	3,385,496
c. Baseline estimate of the aggregate dollar amount of sales, 02/18/2020 to 02/29/2020 ($Millions)	3,046,946
d. Baseline estimate of the aggregate dollar amount of sales, 03/01/2020 to 08/31/2020 ($Millions)	43,334,343
e. Estimate collections in assessments on security futures products in fiscal year 2020 ($Millions)	0.026
f. Implied fee rate (($1,825,525,000 − $20.70 * (a + b) − e) / (c + d)	22.10

Month (A)	Number of trading days in month (B)	Total dollar amount of sales (C)	Average daily dollar amount of sales (ADS) (D)	9-month trailing moving average ADS (E)	1 month lag of 9-month trailing moving average ADS (F)	2 month lag of 9-month trailing moving average ADS (G)	Forecast 9-month trailing moving average ADS (H)	Forecast total dollar amount of sales (I)
Feb–09	19	$4,771,470,184,048	$251,130,009,687					
Mar–09	22	5,885,594,284,780	267,527,012,945					
Apr–09	21	5,123,665,205,517	243,984,057,406					
May–09	20	5,086,717,129,965	254,335,856,498					
Jun–09	22	5,271,742,782,609	239,624,671,937					
Jul–09	22	4,659,599,245,583	211,799,965,708					
Aug–09	21	4,582,102,295,783	218,195,347,418					
Sep–09	21	4,929,155,364,888	234,721,684,042					
Oct–09	22	5,410,025,301,030	245,910,240,956	$240,803,205,177				
Nov–09	20	4,770,928,103,032	238,546,405,152	239,405,026,896	$240,803,205,177			
Dec–09	22	4,688,555,303,171	213,116,150,144	233,359,375,473	239,405,026,896	$240,803,205,177		
Jan–10	19	4,661,793,708,648	245,357,563,613	233,511,987,274	233,359,375,473	239,405,026,896		
Feb–10	19	4,969,848,578,023	261,570,977,791	234,315,889,640	233,511,987,274	233,359,375,473		
Mar–10	23	5,563,529,823,621	241,892,601,027	234,567,881,761	234,315,889,640	233,511,987,274		
Apr–10	21	5,546,445,874,917	264,116,470,234	240,380,826,709	234,567,881,761	234,315,889,640		
May–10	20	7,260,430,376,294	363,021,518,815	256,472,623,530	240,380,826,709	234,567,881,761		
Jun–10	22	6,124,776,349,285	278,398,924,967	261,325,650,300	256,472,623,530	240,380,826,709		
Jul–10	21	5,058,242,097,334	240,868,671,302	260,765,475,894	261,325,650,300	256,472,623,530		
Aug–10	22	4,765,828,263,463	216,628,557,430	258,330,159,480	260,765,475,894	261,325,650,300		
Sep–10	21	4,640,722,344,586	220,986,778,314	259,204,673,721	258,330,159,480	260,765,475,894		
Oct–10	21	5,138,411,712,272	244,686,272,013	259,130,085,766	259,204,673,721	258,330,159,480		
Nov–10	21	5,279,700,881,901	251,414,327,710	258,001,569,090	259,130,085,766	259,204,673,721		
Dec–10	22	4,998,574,681,208	227,207,940,055	256,369,940,093	258,001,569,090	259,130,085,766		
Jan–11	20	5,043,391,121,345	252,169,556,067	255,042,505,186	256,369,940,093	258,001,569,090		
Feb–11	19	5,114,631,590,581	269,191,136,346	244,616,907,134	255,042,505,186	256,369,940,093		
Mar–11	23	6,499,355,385,307	282,580,668,926	245,081,545,351	244,616,907,134	255,042,505,186		
Apr–11	20	4,975,954,868,765	248,797,743,438	245,962,553,367	245,081,545,351	244,616,907,134		
May–11	21	5,717,905,621,053	272,281,220,050	252,146,182,547	245,962,553,367	245,081,545,351		
Jun–11	22	5,820,079,494,414	264,549,067,928	256,986,436,948	252,146,182,547	245,962,553,367		
Jul–11	20	5,189,681,899,635	259,484,094,982	258,630,639,500	256,986,436,948	252,146,182,547		
Aug–11	23	8,720,566,877,109	379,155,081,613	272,824,056,601	258,630,639,500	256,986,436,948		
Sep–11	21	6,343,578,147,811	302,075,149,896	281,142,635,472	272,824,056,601	258,630,639,500		
Oct–11	21	6,163,272,963,688	293,489,188,747	285,733,705,770	281,142,635,472	272,824,056,601		
Nov–11	21	5,493,906,473,584	261,614,593,980	284,891,867,729	285,733,705,770	281,142,635,472		
Dec–11	21	5,017,867,255,600	238,946,059,790	280,043,577,825	284,891,867,729	285,733,705,770		
Jan–12	20	4,726,522,206,487	236,326,110,324	278,657,840,812	280,043,577,825	284,891,867,729		
Feb–12	20	5,011,862,514,132	250,593,125,707	276,248,052,552	278,657,840,812	280,043,577,825		
Mar–12	22	5,638,847,967,025	256,311,271,228	275,332,741,808	276,248,052,552	278,657,840,812		
Apr–12	20	5,084,239,396,560	254,211,969,828	274,746,950,124	275,332,741,808	276,248,052,552		
May–12	22	5,611,638,053,374	255,074,456,972	260,960,214,052	274,746,950,124	275,332,741,808		
Jun–12	21	5,121,896,896,362	243,899,852,208	254,496,292,087	260,960,214,052	274,746,950,124		
Jul–12	21	4,567,519,314,374	217,500,919,732	246,053,151,085	254,496,292,087	260,960,214,052		
Aug–12	23	4,621,597,884,730	200,939,038,467	239,311,422,695	246,053,151,085	254,496,292,087		
Sep–12	19	4,598,499,962,682	242,026,313,825	239,653,673,143	239,311,422,695	246,053,151,085		
Oct–12	21	5,095,175,588,310	242,627,408,967	240,353,817,437	239,653,673,143	239,311,422,695		
Nov–12	21	4,547,882,974,292	216,565,855,919	236,573,009,683	240,353,817,437	239,653,673,143		
Dec–12	20	4,744,922,754,360	237,246,137,718	234,454,661,515	236,573,009,683	240,353,817,437		
Jan–13	21	5,079,603,817,496	241,885,896,071	233,085,097,764	234,454,661,515	236,573,009,683		
Feb–13	19	4,800,663,527,089	252,666,501,426	232,817,547,148	233,085,097,764	234,454,661,515		
Mar–13	20	4,917,701,839,870	245,885,091,993	233,038,129,346	232,817,547,148	233,085,097,764		
Apr–13	22	5,451,358,637,079	247,789,028,958	236,403,474,816	233,038,129,346	232,817,547,148		
May–13	22	5,681,788,831,869	258,263,128,721	242,772,818,178	236,403,474,816	233,038,129,346		
Jun–13	20	5,623,545,462,226	281,177,273,111	247,122,924,765	242,772,818,178	236,403,474,816		
Jul–13	22	5,083,861,509,754	231,084,614,080	245,840,392,000	247,122,924,765	242,772,818,178		
Aug–13	22	4,925,611,193,095	223,891,417,868	246,654,343,327	245,840,392,000	247,122,924,765		
Sep–13	20	4,959,197,626,713	247,959,881,336	247,844,759,285	246,654,343,327	245,840,392,000		
Oct–13	23	5,928,804,028,970	257,774,088,216	249,610,113,968	247,844,759,285	246,654,343,327		
Nov–13	20	5,182,024,612,049	259,101,230,602	250,325,083,876	249,610,113,968	247,844,759,285		
Dec–13	21	5,265,282,994,173	250,727,761,627	250,863,158,280	250,325,083,876	249,610,113,968		
Jan–14	21	5,808,700,114,288	276,604,767,347	254,064,906,990	250,863,158,280	250,325,083,876		
Feb–14	19	6,018,926,931,054	316,785,627,950	260,567,406,904	254,064,906,990	250,863,158,280		
Mar–14	21	6,068,617,342,988	288,981,778,238	261,434,574,140	260,567,406,904	254,064,906,990		
Apr–14	21	6,013,948,953,528	286,378,521,597	267,578,341,642	261,434,574,140	260,567,406,904		
May–14	21	5,265,594,447,318	250,742,592,729	270,561,805,516	267,578,341,642	261,434,574,140		
Jun–14	21	5,159,506,989,669	245,690,809,032	270,309,686,371	270,561,805,516	267,578,341,642		
Jul–14	22	5,364,099,567,460	243,822,707,612	268,759,532,970	270,309,686,371	270,561,805,516		
Aug–14	21	5,075,332,147,677	241,682,483,223	266,824,116,595	268,759,532,970	270,309,686,371		
Sep–14	21	5,507,943,363,243	262,283,017,297	268,108,033,892	266,824,116,595	268,759,532,970		
Oct–14	23	7,796,638,035,879	338,984,262,430	275,039,088,901	268,108,033,892	266,824,116,595		
Nov–14	19	5,340,847,027,697	281,097,211,984	271,073,709,349	275,039,088,901	268,108,033,892		
Dec–14	22	6,559,110,068,128	298,141,366,733	272,091,441,404	271,073,709,349	275,039,088,901		
Jan–15	20	6,185,619,541,044	309,280,977,052	274,636,158,677	272,091,441,404	271,073,709,349		
Feb–15	19	5,723,523,235,641	301,238,065,034	280,246,766,711	274,636,158,677	272,091,441,404		
Mar–15	22	6,395,046,297,249	290,683,922,602	285,246,001,552	280,246,766,711	274,636,158,677		
Apr–15	21	5,625,548,298,004	267,883,252,286	287,919,395,405	285,246,001,552	280,246,766,711		
May–15	20	5,521,351,972,386	276,067,598,619	291,739,963,782	287,919,395,405	285,246,001,552		
Jun–15	22	6,005,521,460,806	272,978,248,218	292,928,322,773	291,739,963,782	287,919,395,405		
Jul–15	22	6,493,670,315,390	295,166,832,518	288,059,719,450	292,928,322,773	291,739,963,782		
Aug–15	21	6,963,901,249,270	331,614,345,203	293,672,734,252	288,059,719,450	292,928,322,773		
Sep–15	21	6,434,496,770,897	306,404,608,138	294,590,872,186	293,672,734,252	288,059,719,450		
Oct–15	22	6,592,594,708,082	299,663,395,822	293,522,252,049	294,590,872,186	293,672,734,252		
Nov–15	20	5,822,824,015,945	291,141,200,797	292,400,378,245	293,522,252,049	294,590,872,186		
Dec–15	22	6,384,337,478,801	290,197,158,127	292,346,293,303	292,400,378,245	293,522,252,049		
Jan–16	19	6,696,059,796,055	352,424,199,792	301,739,731,915	292,346,293,303	292,400,378,245		
Feb–16	20	6,659,878,908,747	332,993,945,437	308,064,881,562	301,739,731,915	292,346,293,303		
Mar–16	22	6,161,943,754,542	280,088,352,479	308,854,893,146	308,064,881,562	301,739,731,915		
Apr–16	21	5,541,076,988,322	263,860,808,968	305,376,446,085	308,854,893,146	308,064,881,562		
May–16	21	5,693,520,415,112	271,120,019,767	298,654,854,370	305,376,446,085	308,854,893,146		
Jun–16	22	6,317,212,852,759	287,146,038,762	296,515,013,328	298,654,854,370	305,376,446,085		
Jul–16	20	5,331,797,261,269	266,589,863,063	292,840,176,355	296,515,013,328	298,654,854,370		

Month (A)	Number of trading days in month (B)	Total dollar amount of sales (C)	Average daily dollar amount of sales (ADS) (D)	9-month trailing moving average ADS (E)	1 month lag of 9-month trailing moving average ADS (F)	2 month lag of 9-month trailing moving average ADS (G)	Forecast 9-month trailing moving average ADS (H)	Forecast total dollar amount of sales (I)
Aug–16	23	5,635,976,607,786	245,042,461,208	287,718,094,178	292,840,176,355	296,515,013,328		
Sep–16	21	5,942,072,286,976	282,955,823,189	286,913,501,407	287,718,094,178	292,840,176,355		
Oct–16	21	5,460,906,573,682	260,043,170,175	276,648,942,561	286,913,501,407	287,718,094,178		
Nov–16	21	6,845,287,809,886	325,966,086,185	275,868,069,311	276,648,942,561	286,913,501,407		
Dec–16	21	6,208,579,880,985	295,646,660,999	277,596,770,257	275,868,069,311	276,648,942,561		
Jan–17	20	5,598,200,907,603	279,910,045,380	279,380,018,748	277,596,770,257	275,868,069,311		
Feb–17	19	5,443,426,609,533	286,496,137,344	281,088,476,256	279,380,018,748	277,596,770,257		
Mar–17	23	6,661,861,914,530	289,646,170,197	281,366,268,638	281,088,476,256	279,380,018,748		
Apr–17	19	5,116,714,033,499	269,300,738,605	281,667,477,031	281,366,268,638	281,088,476,256		
May–17	22	6,305,822,460,672	286,628,293,667	286,288,125,082	281,667,477,031	281,366,268,638		
Jun–17	22	6,854,993,097,601	311,590,595,346	289,469,766,433	286,288,125,082	281,667,477,031		
Jul–17	20	5,394,333,070,522	269,716,653,526	290,544,597,917	289,469,766,433	286,288,125,082		
Aug–17	23	6,206,204,906,864	269,834,995,951	284,307,810,113	290,544,597,917	289,469,766,433		
Sep–17	20	5,939,886,169,525	296,994,308,476	284,457,548,721	284,307,810,113	290,544,597,917		
Oct–17	22	6,134,529,538,894	278,842,251,768	284,338,904,987	284,457,548,721	284,307,810,113		
Nov–17	21	6,289,748,560,897	299,511,836,233	285,785,093,752	284,338,904,987	284,457,548,721		
Dec–17	20	6,672,181,323,001	333,609,066,150	290,669,859,969	285,785,093,752	284,338,904,987		
Jan–18	21	7,672,288,677,308	365,347,079,872	301,341,675,665	290,669,859,969	285,785,093,752		
Feb–18	19	8,725,420,462,639	459,232,655,928	320,519,938,139	301,341,675,665	290,669,859,969		
Mar–18	21	8,264,755,011,030	393,559,762,430	329,627,623,370	320,519,938,139	301,341,675,665		
Apr–18	21	7,490,308,402,446	356,681,352,497	339,290,367,701	329,627,623,370	320,519,938,139		
May–18	22	7,242,077,467,179	329,185,339,417	345,884,850,308	339,290,367,701	329,627,623,370		
Jun–18	21	7,936,783,802,579	377,942,085,837	354,879,047,793	345,884,850,308	339,290,367,701		
Jul–18	21	6,807,593,326,456	324,171,110,784	359,915,587,683	354,879,047,793	345,884,850,308		
Aug–18	23	7,363,115,444,274	320,135,454,099	362,207,100,779	359,915,587,683	354,879,047,793		
Sep–18	19	6,781,988,459,996	356,946,761,052	364,800,177,991	362,207,100,779	359,915,587,683		
Oct–18	23	10,133,514,480,998	440,587,586,130	373,160,234,242	364,800,177,991	362,207,100,779		
Nov–18	21	8,414,847,862,204	400,707,041,057	366,657,388,145	373,160,234,242	364,800,177,991		
Dec–18	19	9,075,221,733,736	477,643,249,144	375,999,997,780	366,657,388,145	373,160,234,242		
Jan–19	21	7,960,664,643,749	379,079,268,750	378,488,655,141	375,999,997,780	366,657,388,145		
Feb–19	19	6,676,391,653,247	351,389,034,381	380,955,732,359	378,488,655,141	375,999,997,780		
Mar–19	21	7,828,979,311,928	372,808,538,663	380,385,338,229	380,955,732,359	378,488,655,141		
Apr–19	21	6,907,923,076,080	328,948,717,909	380,916,183,465	380,385,338,229	380,955,732,359		
May–19	22	7,895,053,976,747	358,866,089,852	385,219,587,438	380,916,183,465	380,385,338,229		
Jun–19	20	7,070,583,442,058	353,529,172,103	384,839,855,332	385,219,587,438	380,916,183,465		
Jul–19	22	6,792,811,319,721	308,764,150,896	370,192,806,973	384,839,855,332	385,219,587,438		
Aug–19	22	8,059,527,400,976	366,342,154,590	366,374,486,254	370,192,806,973	384,839,855,332		
Sep–19	20	6,958,116,138,899	347,905,806,945	351,959,214,899	366,374,486,254	370,192,806,973		
Oct–19	23	7,235,982,824,882	314,607,948,908	344,795,734,916	351,959,214,899	366,374,486,254		
Nov–19	20	6,784,888,230,209	339,244,411,510	343,446,332,375	344,795,734,916	351,959,214,899		
Dec–19	21				343,446,332,375	344,795,734,916	338,549,556,901	7,109,540,694,921
Jan–20	21					343,446,332,375	338,549,556,901	7,109,540,694,921
Feb–20	19						338,549,556,901	6,432,441,581,119
Mar–20	22						338,549,556,901	7,448,090,251,822
Apr–20	21						338,549,556,901	7,109,540,694,921
May–20	20						338,549,556,901	6,770,991,138,020
Jun–20	22						338,549,556,901	7,448,090,251,822
Jul–20	22						338,549,556,901	7,448,090,251,822
Aug–20	21						338,549,556,901	7,109,540,694,921

BILLING CODE 8011–01–P

Figure A.

Aggregate Dollar Amount of Sales Subject to Exchange Act Sections 31(b) and 31(c)[1]

Methodology Developed in Consultation With OMB and CBO

(Dashed Line Indicates Forecast Values)

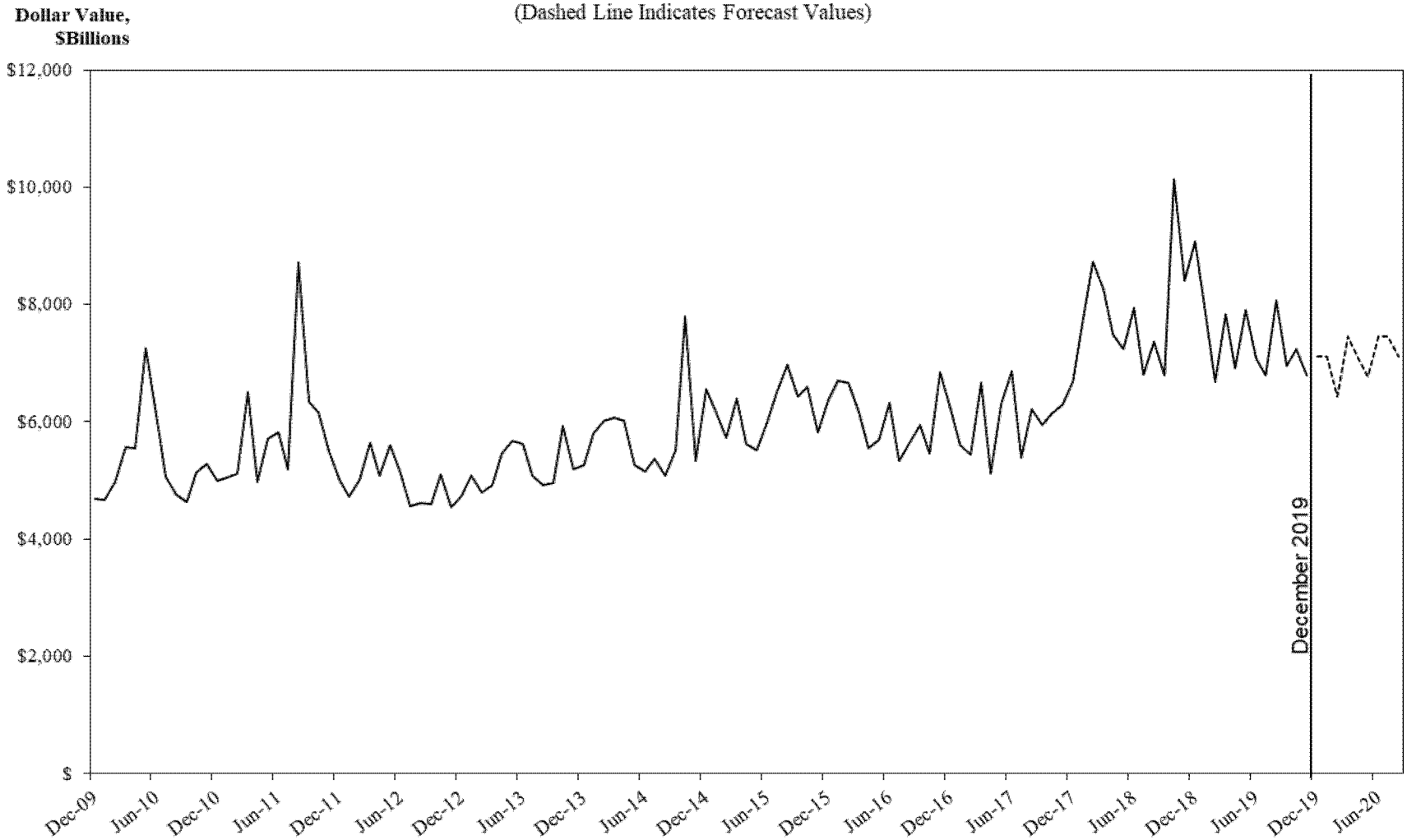

[1]Forecasted line is not smooth because the number of trading days varies by month.

[FR Doc. 2020–00423 Filed 1–13–20; 8:45 am]
BILLING CODE 8011–01–C

SOCIAL SECURITY ADMINISTRATION

[Docket No. SSA–2019–0058]

Privacy Act of 1974; System of Records

AGENCY: Office of Financial Policy and Operations, Office of Budget, Finance, and Management, Social Security Administration (SSA).

ACTION: Notice of a modified system of records.

SUMMARY: In accordance with the Privacy Act, we are issuing public notice of our intent to modify an existing system of records entitled, Financial Transactions of SSA Accounting and Finance Offices (60–0231), last published on January 11, 2006. This notice publishes details of the modified system as set forth below under the caption, **SUPPLEMENTARY INFORMATION**.

DATES: The system of records notice (SORN) is applicable upon its publication in today's **Federal Register**, with the exception of the new routine uses, which are effective February 13, 2020. We invite public comment on the routine uses or other aspects of this SORN. In accordance with 5 U.S.C. 552a(e)(4) and (e)(11), the public is given a 30-day period in which to submit comments. Therefore, please submit any comments by February 13, 2020.

ADDRESSES: The public, Office of Management and Budget (OMB), and Congress may comment on this publication by writing to the Executive Director, Office of Privacy and Disclosure, Office of the General Counsel, SSA, Room G–401 West High Rise, 6401 Security Boulevard, Baltimore, Maryland 21235–6401, or through the Federal e-Rulemaking Portal at *http://www.regulations.gov,* please reference docket number SSA–2019–0058. All comments we receive will be available for public inspection at the above address and we will post them to *http://www.regulations.gov.*

FOR FURTHER INFORMATION CONTACT: Tristin Dorsey, Government Information Specialist, Privacy Implementation Division, Office of Privacy and Disclosure, Office of the General Counsel, SSA, Room G–401 West High Rise, 6401 Security Boulevard, Baltimore, Maryland 21235–6401, telephone: (410) 966–5855, email: *tristin.dorsey@ssa.gov.*

SUPPLEMENTARY INFORMATION: We are modifying the system of records name from ''Financial Transactions of SSA Accounting and Finance Offices, SSA, Deputy Commissioner for Finance, Assessment and Management, Office of Financial Policy and Operations'' to ''Social Security Online Accounting and Reporting System'' to accurately reflect the system. We are modifying the system manager and location to clarify the name of the office.

We are clarifying the categories of individuals covered by the system of records and clarifying how we will store and retrieve records. We are also expanding the categories of records to include collection payment information, taxpayer identification numbers, and email addresses; and expanding the record source categories to include existing SSA systems of records.

In addition, we are revising the language in routine use No. 1 to clarify that we may also provide records to the Department of Treasury, for the purpose of administering licenses for individuals residing in sanctioned foreign countries. We are revising routine use No. 8 by specifying additional debt collection reasons, in which we may disclose information to the Department of Treasury.

We are deleting the following routine uses, of the prior version of the SORN, as they are no longer applicable:

- No. 2—this routine use permitted disclosures to members of Congress, for the purpose of Federal financial assistance.
- No. 5—this routine use permitted disclosures to Federal, State, and local agencies that maintain civil, criminal, or other relevant enforcement records or other pertinent records, for the purpose of obtaining records relevant to an agency decision concerning the hiring or retention of an employee; the issuance of a security clearance; the letting of a contract; or the issuance of a license or other benefit.
- No. 6—this routine use permitted disclosures to Federal agencies, in response to their request, for the purpose of obtaining records relevant and necessary to an agency decision concerning the hiring or retention of an employee; the issuance of a security clearance; the reporting of an investigation of an employee; the letting of a contract; or the issuance of a license or other benefit by the requesting agency.
- No. 7—this routine use permitted disclosures to Federal agencies that have the power to subpoena records, *e.g.,* the Internal Revenue Service or the Civil Rights Commission, in response to a subpoena for information.
- No. 11(a)—this routine use permitted disclosures to the Department of Treasury, for purposes of determining whether an individual has a delinquent tax account and determining an individual's creditworthiness.

We are adding three new routine uses to permit disclosures to the Office of the President, for the purpose of responding to an inquiry received; to Federal, State and local law enforcement agencies and private contractors, for the safety and security of SSA employees, customers, and facilities; and to the Internal Revenue Service, for auditing purposes of the safeguard provisions of Internal Revenue Code of 1986. Lastly, we are modifying the notice throughout to correct miscellaneous stylistic formatting and typographical errors of the previously published notice, and to ensure the language reads consistently across multiple systems. We are republishing the entire notice for ease of reference.

In accordance with 5 U.S.C. 552a(r), we have provided a report to OMB and Congress on this modified system of records.

Matthew Ramsey,
Executive Director, Office of Privacy and Disclosure, Office of the General Counsel.

SYSTEM NAME AND NUMBER

Social Security Online Accounting and Reporting System, 60–0231

SECURITY CLASSIFICATION:

Unclassified.

SYSTEM LOCATION:

Social Security Administration, Office of Budget, Finance, and Management, Office of Financial Policy and Operations, 6401 Security Boulevard, Baltimore, Maryland 21235–6401.

SYSTEM MANAGER(S):

Social Security Administration, Deputy Commissioner of Office of Budget, Finance, and Management, Office of Financial Policy and Operations, 6401 Security Boulevard, Baltimore, MD 21235–6401, *DCBFM.OFPO.Controls@ssa.gov.*

AUTHORITY FOR MAINTENANCE OF THE SYSTEM:

Sections 204 and 1631 of the Social Security Act, as amended; Budget and Accounting Procedures Act of 1950 (Pub. L. 81–784); Debt Collection Act of 1982 (Pub. L. 97–365); Debt Collection Improvement Act of 1996 (Pub. L. 104–134); International Emergency Economic Powers Act (Pub. L. 95–223); Digital Accountability and Transparency Act (Pub. L. 113–101); and SSA Regulations (20 CFR parts 404, 416, and 422).

PURPOSE(S) OF THE SYSTEM:

We will use the information in this system to track payments to individuals, exclusive of salaries and wages; establish receivable records for recovery of overpayments and tracking repayment status; develop reports of non-employee vendors for applicable State and local taxing officials of taxable income; validate and certify payments; and internal auditing.

CATEGORIES OF INDIVIDUALS COVERED BY THE SYSTEM:

This system maintains information about individuals who make payments to or receive payments from us including, but not limited to, employees traveling on official business, employees participating in the vision program, contractors, grantees, consultants, Social Security beneficiaries or recipients who may have been overpaid; and for individuals who have received goods or services for which there is a charge or fee.

CATEGORIES OF RECORDS IN THE SYSTEM:

This system consists of records received, created, or compiled pertaining to collection and summary level payment information including, but not limited to, name; Social Security number (SSN); taxpayer identification number; email address; purpose of payment, accounting classification, and amount paid; credit card information; the amount of indebtedness for overpayments and delinquent grants; repayment status; collection amount; travel vouchers submitted for reimbursement of travel and other expenditures, while on official business; the amount of indebtedness for employee overpayments, exclusive of salaries and wages; and Video Display Terminal (VDT) vouchers submitted for reimbursement of vision costs.

RECORD SOURCE CATEGORIES:

We obtain information in this system of records from existing SSA systems of records such as the Master Beneficiary Record, 60–0090, and Supplemental Security Income Record and Special Veterans Benefits, 60–0103; and from the individual to whom the record pertains, including individual travel and VDT vouchers, grants, contract and purchase order award documents, delinquent grant records, invoices of services rendered or goods received, and applications for travel or salary advances.

ROUTINE USES OF RECORDS MAINTAINED IN THE SYSTEM, INCLUDING CATEGORIES OF USERS AND PURPOSES OF SUCH USES:

We will disclose records pursuant to the following routine uses; however, we will not disclose any information defined as ''return or return information'' under 26 U.S.C. 6103 of the Internal Revenue Code (IRC), unless authorized by a statute, the Internal Revenue Service (IRS), or IRS regulations.

1. To the Department of the Treasury,

(a) for check preparation;

(b) to provide the Office of Foreign Assets Control relevant and necessary information concerning SSA payments for investigations of individuals, groups, companies, or countries on the Specially Designated National and Blocked Persons List; and

(c) for the purpose of administering licenses for individuals residing in foreign countries.

2. To a congressional office in response to an inquiry from that office made on behalf of, and at the request of, the subject of the record or a third party acting on the subject's behalf.

3. To the Department of Justice (DOJ), in the event that we deem it desirable, or necessary, in determining whether particular records are required to be disclosed under the Freedom of Information Act.

4. To officials of labor organizations recognized under 5 U.S.C. 71, when relevant and necessary to their duties of exclusive representation concerning personnel policies, practices, and matters affecting conditions of employment.

5. To DOJ, a court or other tribunal, or another party before such court or tribunal, when

(a) SSA, or any component thereof; or

(b) any SSA employee in his or her official capacity; or

(c) any SSA employee in his or her individual capacity where DOJ (or SSA where it is authorized to do so) has agreed to represent the employee; or

(d) the United States or any agency thereof where we determine the litigation is likely to affect SSA or any of its components, is a party to the litigation or has an interest in such litigation, and we determine that the use of such records by DOJ, a court or other tribunal, or another party before the tribunal, is relevant and necessary to the litigation, provided, however, that in each case, we determine that such disclosure is compatible with the purpose for which the records were collected.

6. To credit reporting agencies, to obtain a credit report about a potential contractor or grantee in order to determine the potential contractor's or grantee's creditworthiness.

7. To the Department of the Treasury,

(a) to assist us in recovering the collection of delinquent administrative debts through Administrative Wage Garnishment (31 U.S.C. 3720D) via the Treasury Crossing Servicing program as authorized by the Debt Collection Improvement Act of 1996;

(b) to recover debts through reduction of tax refund payments pursuant to 31 U.S.C. 3720A; or

(c) for any other debt collection method authorized under law.

8. To the following entities in order to help collect a debt owed the United States:

(a) to another Federal agency, so that agency can effect a salary offset;

(b) to another Federal agency, so that agency can effect an administrative offset under common law or under 31 U.S.C. 3716 (withholding from money payable to, or held on behalf of, the individual);

(c) to the Department of Treasury, to request the mailing address of an individual under the IRC (26 U.S.C. 6103(m)(2)(A)), for the purpose of locating the individual to collect or compromise a Federal claim against the individual, in accordance with 31 U.S.C. 3711, 3717 and 3718;

(d) to an agent of SSA that is a consumer reporting agency within the meaning of 15 U.S.C. 1681a(f), the mailing address of an individual may be disclosed to such agent for the purpose of allowing such agent to prepare a commercial credit report on the individual for use by SSA in accordance with 31 U.S.C. 3711, 3717 and 3718;

(e) to debt collection agents under 31 U.S.C. 3718 or under common law to help collect a debt; and

(f) to DOJ for litigation or for further administrative action; in accordance with 31 U.S.C. 3711(e)(1)(F), disclosure under parts (a)–(c) and (e) is limited to information necessary to establish the identity of the person, including name, address and taxpayer identification or SSN, the amount status and history of the claim, and the agency or program under which the claim arose.

9. To another Federal agency, that has asked SSA to effect an administrative offset under common law or under 31 U.S.C. 3716, to help collect a debt owed the United States; disclosure under this routine use is limited to the individual's name, address, SSN, and other information necessary to identify the individual information about the money payable to, or held for, the individual, and other information concerning the administrative offset.

10. To IRS and State and local tax authorities, when income and payments are reported to them concerning employees, contractors, and when amounts are written-off as legally or

administratively uncollectible, in whole or in part.

11. To banks enrolled in the Treasury credit card network, to collect a payment or debt when the individual has given his or her credit card number for this purpose.

12. To student volunteers, individuals working under a personal services contract, and other workers who technically do not have the status of Federal employees, when they are performing work for us, as authorized by law, and they need access to personally identifiable information (PII) in our records in order to perform their assigned agency functions.

13. To the National Archives and Records Administration (NARA) under 44 U.S.C. 2904 and 2906.

14. To contractors and other Federal agencies, as necessary, for the purpose of assisting us in the efficient administration of its programs. We will disclose information under this routine use only in situations in which we may enter into a contractual or similar agreement to obtain assistance in accomplishing an SSA function relating to this system of records.

15. To appropriate agencies, entities, and persons when:

(a) SSA suspects or has confirmed that there has been a breach of the system of records;

(b) SSA has determined that as a result of the suspected or confirmed breach there is a risk of harm to individuals, SSA (including its information systems, programs, and operations), the Federal Government, or national security; and

(c) the disclosure made to such agencies, entities, and persons is reasonably necessary to assist in connection with SSA's efforts to respond to the suspected or confirmed breach or to prevent, minimize, or remedy such harm.

16. To another Federal agency or Federal entity, when we determine that information from this system of records is reasonably necessary to assist the recipient agency or entity in:

(a) Responding to a suspected or confirmed breach; or

(b) preventing, minimizing, or remedying the risk of harm to individuals, the recipient agency or entity (including its information systems, programs, and operations), the Federal Government, or national security, resulting from a suspected or confirmed breach.

17. To the Office of the President, in response to an inquiry received from that office made on behalf of, and at the request of, the subject of record or a third party acting on the subject's behalf.

18. To Federal, State and local law enforcement agencies and private security contractors, as appropriate, information necessary:

(a) To enable them to protect the safety of SSA employees and customers, the security of the SSA workplace and the operation of our facilities, or

(b) to assist investigations or prosecutions with respect to activities that affect such safety and security or activities that disrupt the operation of our facilities.

19. To the IRS, Department of the Treasury, for the purpose of auditing SSA's compliance with the safeguard provisions of the IRC of 1986, as amended.

POLICIES AND PRACTICES FOR STORAGE OF RECORDS:

We will maintain records in this system in paper and in electronic form.

POLICIES AND PRACTICES FOR RETRIEVAL OF RECORDS:

We will retrieve records in this system by name, SSN, voucher number, or collection number.

POLICIES AND PRACTICES FOR RETENTION AND DISPOSAL OF RECORDS:

In accordance with NARA rules codified at 36 CFR 1225.16, we maintain records in accordance with the approved NARA General Records Schedule 1.1, Financial Management and Reporting Records (DAA–GRS–2013–0003–0001 and DAA–GRS–2013–0003–0002).

ADMINISTRATIVE, TECHNICAL, AND PHYSICAL SAFEGUARDS:

We retain electronic and paper files containing personal identifiers in secure storage areas accessible only by our authorized employees and contractors who have a need for the information when performing their official duties. Security measures include, but are not limited to, the use of codes and profiles, personal identification number and password, and personal identification verification cards. We restrict access to specific correspondence within the system based on assigned roles and authorized users. We maintain electronic files with personal identifiers in secure storage areas. We use audit mechanisms to record sensitive transactions as an additional measure to protect information from unauthorized disclosure or modification. We keep paper records in cabinets within secure areas, with access limited to only those employees who have an official need for access in order to perform their duties.

We annually provide our employees and contractors with appropriate security awareness training that includes reminders about the need to protect PII and the criminal penalties that apply to unauthorized access to, or disclosure of, PII (5 U.S.C. 552a(i)(1)). Furthermore, employees and contractors with access to databases maintaining PII must annually sign a sanctions document that acknowledges their accountability for inappropriately accessing or disclosing such information.

RECORD ACCESS PROCEDURES:

Individuals may submit requests for information about whether this system contains a record about them by submitting a written request to the system manager at the above address, which includes their name, SSN, or other information that may be in this system of records that will identify them. Individuals requesting notification of, or access to, a record by mail must include: (1) A notarized statement to us to verify their identity; or (2) must certify in the request that they are the individual they claim to be and that they understand that the knowing and willful request for, or acquisition of, a record pertaining to another individual under false pretenses is a criminal offense.

Individuals requesting notification of, or access to, records in person must provide their name, SSN, or other information that may be in this system of records that will identify them, as well as provide an identity document, preferably with a photograph, such as a driver's license. Individuals lacking identification documents sufficient to establish their identity must certify in writing that they are the individual they claim to be and that they understand that the knowing and willful request for, or acquisition of, a record pertaining to another individual under false pretenses is a criminal offense.

These procedures are in accordance with our regulations at 20 CFR 401.40 and 401.45.

CONTESTING RECORD PROCEDURES:

Same as record access procedures. Individuals should also reasonably identify the record, specify the information they are contesting, and state the corrective action sought and the reasons for the correction with supporting justification showing how the record is incomplete, untimely, inaccurate, or irrelevant. These procedures are in accordance with our regulations at 20 CFR 401.65(a).

NOTIFICATION PROCEDURES:

Same as records access procedures. These procedures are in accordance

with our regulations at 20 CFR 401.40 and 401.45.

EXEMPTIONS PROMULGATED FOR THE SYSTEM:

None.

HISTORY:

71 FR 1847, Financial Transactions of SSA Accounting and Finance Offices.

72 FR 69723, Financial Transactions of SSA Accounting and Finance Offices.

[FR Doc. 2020–00331 Filed 1–13–20; 8:45 am]

BILLING CODE 4191–02–P

DEPARTMENT OF STATE

[Public Notice 10998]

Notice of Determinations; Culturally Significant Objects Imported for Exhibition—Determinations: ''Félix Fénéon: The Anarchist and the Avant-Garde—From Signac to Matisse and Beyond'' Exhibition

SUMMARY: Notice is hereby given of the following determinations: I hereby determine that certain objects to be included in the exhibition ''Félix Fénéon: The Anarchist and the Avant-Garde—From Signac to Matisse and Beyond'' imported from abroad for temporary exhibition within the United States, are of cultural significance. The objects are imported pursuant to loan agreements with the foreign owners or custodians. I also determine that the exhibition or display of the exhibit objects at The Museum of Modern Art, New York, New York, from on or about March 22, 2020, until on or about July 25, 2020, and at possible additional exhibitions or venues yet to be determined, is in the national interest. I have ordered that Public Notice of these determinations be published in the **Federal Register**.

FOR FURTHER INFORMATION CONTACT: Chi D. Tran, Paralegal Specialist, Office of the Legal Adviser, U.S. Department of State (telephone: 202–632–6471; email: *section2459@state.gov*). The mailing address is U.S. Department of State, L/PD, SA–5, Suite 5H03, Washington, DC 20522–0505.

SUPPLEMENTARY INFORMATION: The foregoing determinations were made pursuant to the authority vested in me by the Act of October 19, 1965 (79 Stat. 985; 22 U.S.C. 2459), Executive Order 12047 of March 27, 1978, the Foreign Affairs Reform and Restructuring Act of 1998 (112 Stat. 2681, *et seq.;* 22 U.S.C. 6501 note, *et seq.*), Delegation of Authority No. 234 of October 1, 1999, and Delegation of Authority No. 236–3 of August 28, 2000.

Marie Therese Porter Royce,

Assistant Secretary, Educational and Cultural Affairs, Department of State.

[FR Doc. 2020–00407 Filed 1–13–20; 8:45 am]

BILLING CODE 4710–05–P

DEPARTMENT OF STATE

[Public Notice:11001]

Notice of Determinations; Culturally Significant Objects Imported for Exhibition—Determinations: ''Last Supper in Pompeii: Food and Wine from the Table to the Grave'' Exhibition

SUMMARY: Notice is hereby given of the following determinations: I hereby determine that certain objects to be included in the exhibition ''Last Supper in Pompeii: Food and Wine from the Table to the Grave,'' imported from abroad for temporary exhibition within the United States, are of cultural significance. The objects are imported pursuant to loan agreements with the foreign owners or custodians. I also determine that the exhibition or display of the exhibit objects at the Fine Arts Museums of San Francisco, San Francisco, California, from on or about April 18, 2020, until on or about August 30, 2020, and at possible additional exhibitions or venues yet to be determined, is in the national interest. I have ordered that Public Notice of these determinations be published in the **Federal Register**.

FOR FURTHER INFORMATION CONTACT: Chi D. Tran, Paralegal Specialist, Office of the Legal Adviser, U.S. Department of State (telephone: 202–632–6471; email: *section2459@state.gov*). The mailing address is U.S. Department of State, L/PD, SA–5, Suite 5H03, Washington, DC 20522–0505.

SUPPLEMENTARY INFORMATION: The foregoing determinations were made pursuant to the authority vested in me by the Act of October 19, 1965 (79 Stat. 985; 22 U.S.C. 2459), Executive Order 12047 of March 27, 1978, the Foreign Affairs Reform and Restructuring Act of 1998 (112 Stat. 2681, *et seq.;* 22 U.S.C. 6501 note, *et seq.*), Delegation of Authority No. 234 of October 1, 1999, and Delegation of Authority No. 236–3 of August 28, 2000.

Marie Therese Porter Royce,

Assistant Secretary, Educational and Cultural Affairs, Department of State.

[FR Doc. 2020–00410 Filed 1–13–20; 8:45 am]

BILLING CODE 4710–05–P

DEPARTMENT OF STATE

[Public Notice 10952]

60 Day Notice of Proposed Information Collection: PEPFAR Program Expenditures

ACTION: Notice of request for public comment.

SUMMARY: The Department of State is seeking Office of Management and Budget (OMB) approval for the information collection described below. In accordance with the Paperwork Reduction Act of 1995, we are requesting comments on this collection from all interested individuals and organizations. The purpose of this notice is to allow 60 days for public comment preceding submission of the collection to OMB.

DATES: The Department will accept comments from the public up to March 16, 2020.

ADDRESSES: You may submit comments by any of the following methods:

- *Web:* Persons with access to the internet may comment on this notice by going to *www.Regulations.gov.* You can search for the document by entering ''Docket Number: DOS–2019–0041'' in the Search field. Then click the ''Comment Now'' button and complete the comment form.
- *Email: SGAC_FinancialOps@state.gov.*
- *Regular Mail:* Send written comments to: Office of the US Global AIDS Coordinator and Health Diplomacy (S/GAC), U.S. Department of State, SA–22, 1800 G Street NW, Suite 10300, Washington, DC 20006.
- *Fax:* 202–663–2979.

You must include the DS form number (if applicable), information collection title, and the OMB control number in any correspondence.

FOR FURTHER INFORMATION CONTACT: Direct requests for additional information regarding the collection listed in this notice, including requests for copies of the proposed collection instrument and supporting documents, to Irum Zaidi, 1800 G St. NW, Suite 10300, SA–22, Washington, DC 20006, who may be reached on 202–663–2588 or at *ZaidiIF@state.gov.*

SUPPLEMENTARY INFORMATION:

- *Title of Information Collection:* PEPFAR Program Expenditures.
- *OMB Control Number:* 1405–0208.
- *Type of Request:* Extension of a Currently Approved Collection.
- *Originating Office:* Office of the U.S. Global AIDS Coordinator and Health Diplomacy (S/GAC).
- *Form Number:* DS–4213.

• *Respondents:* Recipients of U.S. government funds appropriated to carry out the President's Emergency Plan for AIDS Relief (PEPFAR).

• *Estimated Number of Respondents:* 1,100.

• *Estimated Number of Responses:* 1,100.

• *Average Time per Response:* 16 hours.

• *Total Estimated Burden Time:* 17,600 hours.

• *Frequency:* Annually.

• *Obligation to Respond:* Mandatory.

We are soliciting public comments to permit the Department to:

• Evaluate whether the proposed information collection is necessary for the proper functions of the Department.

• Evaluate the accuracy of our estimate of the time and cost burden for this proposed collection, including the validity of the methodology and assumptions used.

• Enhance the quality, utility, and clarity of the information to be collected.

• Minimize the reporting burden on those who are to respond, including the use of automated collection techniques or other forms of information technology.

Please note that comments submitted in response to this Notice are public record. Before including any detailed personal information, you should be aware that your comments as submitted, including your personal information, will be available for public review.

Abstract of Proposed Collection

The U.S. President's Emergency Plan for AIDS Relief (PEPFAR) was established through enactment of the United States Leadership Against HIV/AIDS, Tuberculosis, and Malaria Act of 2003 (Pub. L. 108–25), as amended by the Tom Lantos and Henry J. Hyde United States Global Leadership Against HIV/AIDS, Tuberculosis, and Malaria Reauthorization Act of 2008 (Pub. L. 110–293) (HIV/AIDS Leadership Act), as amended and reauthorized for a third time by the PEPFAR Extension Act of 2018 (Pub. L. 115–305) to support the global response to HIV/AIDS. In order to improve program monitoring, PEPFAR added reporting of expenditures by program area to the current routine reporting of program results for the annual report. Data are collected from implementing partners in countries with PEPFAR programs using a standard tool (DS–4213) via an electronic web-based interface into which users upload data. This expenditures data is analyzed by partner for all PEPFAR program areas. These analyses then feed into partner and program reviews at the country level for monitoring and evaluation on an ongoing basis. Summaries of these data provide key information about program costs under PEPFAR on a global level. Applying expenditure results will improve strategic budgeting, identification of efficient means of delivering services, accuracy in defining program targets, and will inform allocation of resources to ensure the program is accountable and using public funds for maximum impact.

Methodology

Data will continue to be collected in a web-based interface available to all partners receiving funds under PEPFAR. After implementing Expenditure Reporting since 2012, we learned that implementing partners (IPs) prefer the excel template (DS–4213) based data collection process. The requirements in the excel template have been reduced with IP input to only request critical information. By being able to download a template, prime IPs responsible to complete the submission are more effectively able to collaborate quickly with other key personnel and coordinate with their subrecipients to enter the data for the full amount of PEPFAR funding expended during the prior fiscal year. This approach also proves helpful where internet connectivity is not strong. After completing the excel template, IPs upload the data to an automated system that further checks the data entered for quality and completeness. Automated checks reduce the time needed by IPs to complete the data cleaning process. Aggregate data is available in a central system for analysis.

Alexander Cumana,

Deputy Budget Director, Office of the U.S. Global AIDS Coordinator and Health Diplomacy, Department of State.

[FR Doc. 2020–00376 Filed 1–13–20; 8:45 am]

BILLING CODE 4710–10–P

DEPARTMENT OF TRANSPORTATION

Federal Aviation Administration

[Docket No. FAA–2019–0755]

Agency Information Collection Activities: Requests for Comments; Clearance of a Renewed Approval of Information Collection: Alternative Pilot Physical Examination and Education Requirements

AGENCY: Federal Aviation Administration (FAA), DOT.

ACTION: Notice and request for comments.

SUMMARY: In accordance with the Paperwork Reduction Act of 1995, FAA invites public comments about our intention to request Office of Management and Budget (OMB) approval to renew an information collection. The **Federal Register** Notice with a 60-day comment period soliciting comments on the following collection of information was published on September 26, 2019. Section 2307 of the Federal Aviation Administration Extension, Safety, and Security Act of 2016 (FESSA), Medical Certification of Certain Small Aircraft Pilots, directed the FAA to ''issue or revise regulations to ensure that an individual may operate as pilot in command of a covered aircraft'' without having to undergo the medical certification process prescribed by FAA regulations if the pilot and aircraft meet certain prescribed conditions as outlined in FESSA. This collection enables those eligible airmen to establish their eligibility with the FAA.

DATES: Written comments should be submitted by February 13, 2020.

ADDRESSES: Interested persons are invited to submit written comments on the proposed information collection to the Office of Information and Regulatory Affairs, Office of Management and Budget. Comments should be addressed to the attention of the Desk Officer, Department of Transportation/FAA, and sent via electronic mail to *oira_submission@omb.eop.gov,* or faxed to (202) 395–6974, or mailed to the Office of Information and Regulatory Affairs, Office of Management and Budget, Docket Library, Room 10102, 725 17th Street NW, Washington, DC 20503.

FOR FURTHER INFORMATION CONTACT: Bradley C. Zeigler by email at: *bradley.c.zeigler@faa.gov;* phone: 202–267–9601.

SUPPLEMENTARY INFORMATION:

Public Comments Invited: You are asked to comment on any aspect of this information collection, including (a) Whether the proposed collection of information is necessary for FAA's performance; (b) the accuracy of the estimated burden; (c) ways for FAA to enhance the quality, utility and clarity of the information collection; and (d) ways that the burden could be minimized without reducing the quality of the collected information. The agency will summarize and/or include your comments in the request for OMB's clearance of this information collection.

OMB Control Number: 2120–0770.

Title: Alternative Pilot Physical Examination and Education Requirements.

Form Numbers: FAA forms 8700–2 and 8700–3.

Type of Review: Renewal.

Background: The **Federal Register** Notice with a 60-day comment period soliciting comments on the following collection of information was published on September 26, 2019 (84 FR 50877). The FAA will use this information to determine that individual pilots have met the requirements of section 2307 of Public Law 114–190. It is important for the FAA to know this information as the vast majority of pilots conducting operations described in section 2307 of Public Law 114–190 must either hold a valid medical certificate or be conducting operations using the requirements of section 2307 as an alternative to holding a medical certificate.

The FAA published a final rule, Alternative Pilot Physical Examination and Education Requirements, to implement the provisions of section 2307, on January 11, 2017.

Respondents: Approximately 50,000 individuals.

Frequency: Course: Once every two years; medical exam: Once every four years.

Estimated Average Burden per Response: 21 minutes.

Estimated Total Annual Burden: 17,500 hours.

Issued in Washington, DC, on January 8, 2020.

Dwayne C. Morris,

Project Manager, Flight Standards Service, General Aviation and Commercial Division.

[FR Doc. 2020–00361 Filed 1–13–20; 8:45 am]

BILLING CODE 4910–13–P

DEPARTMENT OF TRANSPORTATION

Federal Motor Carrier Safety Administration

[Docket No. FMCSA–2020–0062]

Marking of Commercial Motor Vehicles; Application for an Exemption Adirondak Trailways, Pine Hill Trailways, and New York Trailways

AGENCY: Federal Motor Carrier Safety Administration (FMCSA), DOT.

ACTION: Notice of application for exemption; request for comments.

SUMMARY: The Federal Motor Carrier Safety Administration (FMCSA) requests public comment on an application for exemption from Adirondack Transit Lines, Inc. (dba Adirondak Trailways), Pine Hill-Kingston Bus Corp. (dba Pine Hill Trailways), and Passenger Bus Corp. (dba New York Trailways). The commonly owned and controlled motor carriers have requested an exemption from FMCSA's commercial motor vehicle (CMV) marking rules under certain circumstances involving the exchange of equipment and/or drivers.

DATES: Comments must be received on or before February 13, 2020.

ADDRESSES: You may submit comments bearing the Federal Docket Management System (FDMS) Docket ID FMCSA–2020–0062 using any of the following methods:

- *Website: http://www.regulations.gov.* Follow the instructions for submitting comments on the Federal electronic docket site.
- *Fax:* 1–202–493–2251.
- *Mail:* Docket Management Facility, U.S. Department of Transportation, Room W12–140, 1200 New Jersey Avenue SE, Washington, DC 20590–0001.
- *Hand Delivery:* Ground Floor, Room W12–140, DOT Building, 1200 New Jersey Avenue SE, Washington, DC, between 9 a.m. and 5 p.m. e.t., Monday–Friday, except Federal holidays.

Instructions: All submissions must include the Agency name and docket number for this notice. For detailed instructions on submitting comments and additional information on the exemption process, see the ''Public Participation'' heading below. Note that all comments received will be posted without change to *http://www.regulations.gov,* including any personal information provided. Please see the ''Privacy Act'' heading for further information.

Docket: For access to the docket to read background documents or comments received, go to *http://www.regulations.gov* or to Room W12–140, DOT Building, 1200 New Jersey Avenue SE, Washington, DC, between 9 a.m. and 5 p.m., Monday through Friday, except Federal holidays.

Privacy Act: In accordance with 5 U.S.C. 553(c), DOT solicits comments from the public to better inform its rulemaking process. DOT posts these comments, without edit, including any personal information the commenter provides, to *www.regulations.gov,* as described in the system of records notice (DOT/ALL–14 FDMS), which can be reviewed at *www.dot.gov/privacy.*

Public participation: The *http://www.regulations.gov* website is generally available 24 hours each day, 365 days each year. You may find electronic submission and retrieval help and guidelines under the ''help'' section of the *http://www.regulations.gov* website as well as the DOT's *http://docketsinfo.dot.gov* website. If you would like notification that we received your comments, please include a self-addressed, stamped envelope or postcard or print the acknowledgment page that appears after submitting comments online.

FOR FURTHER INFORMATION CONTACT: Ms. La Tonya Mimms, Chief of Driver and Carrier Operations Division; Office of Carrier, Driver and Vehicle Safety Standards; Telephone: 202–366–9220. Email: *MCPSD@dot.gov.* If you have questions on viewing or submitting material to the docket, contact Docket Services, telephone (202) 366–9826.

SUPPLEMENTARY INFORMATION:

Background

I. Legal Basis

FMCSA has authority under 49 U.S.C. 31136(e) and 31315 to grant exemptions from certain parts of the Federal Motor Carrier Safety Regulations (FMCSRs). FMCSA is required to publish notice of exemption requests in the **Federal Register** (49 U.S.C. 31315(b)(6)(A)). This notice seeks public comment on the request posted to the docket referred to above; the Agency takes no position on its merits. FMCSA will review the request and all comments submitted to the docket before deciding whether to grant or deny the exemption.

II. Application for Exemption

Under 49 CFR 390.21, commercial motor vehicles must display the legal name or single trade name of the motor carrier operating the vehicle and the USDOT identification number assigned to that motor carrier. For motor carriers operating interchanged passenger-carrying vehicles, the requirements of section 390.21(b)(3) are satisfied if the vehicle is marked with a single placard, sign, or other device affixed to the right (curb) side of the vehicle on or near the front passenger door. The placard, sign, or device must display the legal name or a single trade name of the motor carrier operating the CMV and the motor carrier's USDOT number, preceded by the words ''Operated by.''

Adirondack Trailways, Pine Hill Trailways, and New York Trailways combined operate approximately 130 motorcoaches using approximately 124 drivers in intercity bus service. The three commonly owned passenger services interchange buses and drivers frequently each year. Additionally, Adirondack Trailways is party to long-standing agreements for through service with various carriers and for revenue pooling with Greyhound Lines, Inc.

The applicants explained that the frequency with which motorcoaches are involved in interchange arrangements

with the three Trailways carriers, Greyhound Lines, and other passenger carriers make it difficult to comply with section 390.21(b)(3). This is especially the case when the interchanges happen on short notice and in remote locations. Therefore, the companies are seeking an exemption from the CMV marking requirements in 49 CFR 390.21(b)(3). A copy of the application is included in the docket referenced at the beginning of this notice.

III. Request for Comments

In accordance with 49 U.S.C. 31315(b)(6), FMCSA requests public comment from all interested persons on the Trailways application. All comments received before the close of business on the comment closing date indicated at the beginning of this notice will be considered and will be available for examination at the location listed under the **ADDRESSES** section of this notice. Comments received after the comment closing date will be filed in the public docket and will be considered to the extent practicable. In addition to late comments, FMCSA will also continue to docket relevant information that becomes available after the comment closing date. Interested persons should continue to examine the public docket for new material.

Issued on: January 8, 2020.

Larry W. Minor,

Associate Administrator for Policy.

[FR Doc. 2020–00403 Filed 1–13–20; 8:45 am]

BILLING CODE 4910–EX–P

DEPARTMENT OF TRANSPORTATION

Office of the Secretary

[Docket No. DOT–OST–2016–0023]

Extension of a Previously Approved Collection: Public Charters, 14 CFR Part 380

AGENCY: Office of the Secretary.

ACTION: Notice and request for comments.

SUMMARY: In compliance with the Paperwork Reduction Act of 1995, the Department of Transportation (DOT) invites the general public, industry and other governmental parties to comment on Public Charters. A **Federal Register** Notice with a 60-day comment period soliciting comments on the following information collection was published on October 11, 2019 (84 FR 54945). No comments were received.

DATES: Written comments should be submitted by February 13, 2020.

FOR FURTHER INFORMATION CONTACT: Ms. Reather Flemmings (202–366–1865) and Mr. Brett Kruger (202–366–8025), Office of the Secretary, Office of International Aviation, U.S. Air Carrier Licensing/ Special Authorities Division-X44, 1200 New Jersey Ave. SE, Washington, DC 20590.

ADDRESSES: Send comments regarding the burden estimate, including suggestions for reducing the burden, to the Office of Management and Budget, Attention: Desk Officer for the Office of the Secretary of Transportation, 725 17th Street NW, Washington, DC 20503. Comments may also be sent via email to OMB at the following address: *oira_submissions@omb.eop.gov.*

SUPPLEMENTARY INFORMATION:

OMB Control Number: 2106–0005.

Title: Public Charters, 14 CFR part 380.

Form Numbers: 4532, 4533, 4534, 4535.

Type of Review: Extension of a Previously Approved Collection: The current OMB inventory has not changed.

Abstract: 14 CFR part 380 establishes regulations embodying the Department's terms and conditions for Public Charter operators to conduct air transportation using direct air carriers. Public Charter operators arrange transportation for groups of people on chartered aircraft. This arrangement is often less expensive for the travelers than individually buying a ticket. Part 380 exempts charter operators from certain provisions of the U.S. code in order that they may provide this service. A primary goal of Part 380 is to seek protection for the consumer. Accordingly, the rule stipulates that the charter operator must file evidence (a prospectus—consisting of OST Forms 4532, 4533, 4534, 4535, and supporting financial documents) with the Department for each charter program certifying that it has entered into a binding contract with a direct air carrier to provide air transportation and that it has also entered into agreements with Department-approved financial institutions for the protection of charter participants' funds. The prospectus must be approved by the Department prior to the operator's advertising, selling or operating the charter. If the prospectus information were not collected it would be extremely difficult to assure compliance with agency rules and to assure that public security and other consumer protection requirements were in place for the traveling public. The information collected is available for public inspection (*unless the respondent specifically requests confidential treatment*). Part 380 does not provide any assurances of confidentiality.

Burden Statement: Completion of all forms in a prospectus can be accomplished in approximately two hours (30 minutes per form) for new filers and one hour for amendments (existing filings). The forms are simplified and request only basic information about the proposed programs and the private sector filer. The respondent can submit a filing to operate for up to one year and include as many flights as desired, in most cases. If an operator chooses to make changes to a previously approved charter operation, then the operator is required by the regulations to file revisions to its original prospectus.

Respondents: Private Sector: Air carriers; tour operators; the general public (including groups and individuals, corporations and Universities or Colleges, etc.).

Number of Respondents: 245.

Number of Responses: 1,782.

Total Annual Burden: 891 hours.

Frequency of Responses:

245 (respondents) × 4 = 980.

401 (amendments *from the same respondents*) × 2 = 802.

Total estimated responses: 980 + 802 = 1,782.

The frequency of response is dependent upon whether the operator is requesting a new program or amending an existing prospectus. Variations occur due to the respondents' criteria. On average four responses (forms 4532, 4533, 4534 and/or 4535) are required for filing new prospectuses and two of the responses (forms) are required for amendments. The separate hour burden estimate is as follows:

Total Annual Burden: 891 hours.

Approximately 1,782 (responses) × 0.50 (per form) = 891.

Public Comments Invited: (a) Whether the proposed collection of information is necessary for the proper performance of the functions of the Department, including whether the information will have practical utility; (b) the accuracy of the Department's estimate of the burden of the proposed information collection; (c) ways to enhance the quality, utility and clarity of the information collection; and (d) ways to minimize the burden of the collection of information on respondents, by the use of electronic means, including the use of automated collection techniques or other forms of information technology. All responses to this notice will be summarized and included in the request for OMB approval. All comments will also become a matter of public record.

Authority: The Paperwork Reduction Act of 1995; 44 U.S.C. Chapter 35, as amended; and 49 CFR 1.48.

Issued in Washington, DC, on January 7, 2020.

Jeffrey B. Gaynes,

Assistant Director for Regulatory Affairs.

[FR Doc. 2020–00402 Filed 1–13–20; 8:45 am]

BILLING CODE 4910–9X–P

FEDERAL REGISTER

Vol. 85 Tuesday,

No. 9 January 14, 2020

Part II

Environmental Protection Agency

40 CFR Parts 60, 63, and 266

EPA Method 23—Determination of Polychlorinated Dibenzo-p-Dioxins and Polychlorinated Dibenzofurans From Stationary Sources; Proposed Rule

ENVIRONMENTAL PROTECTION AGENCY

40 CFR Parts 60, 63, and 266

[EPA–HQ–OAR–2016–0677; FRL–10003–67–OAR]

RIN 2060–AT09

EPA Method 23—Determination of Polychlorinated Dibenzo-p-Dioxins and Polychlorinated Dibenzofurans From Stationary Sources

AGENCY: Environmental Protection Agency.

ACTION: Proposed rule.

SUMMARY: This action proposes editorial and technical revisions to the Environmental Protection Agency's Method 23 (Determination of Polychlorinated Dibenzo-p-Dioxins and Polychlorinated Dibenzofurans from Stationary Sources). Proposed revisions include incorporating isotope dilution for quantifying all target compounds and changing the method quality control from the current prescriptive format to a more flexible performance-based approach with specified performance criteria. We are also proposing revisions that will expand the list of target compounds of Method 23 to include polycyclic aromatic hydrocarbons (PAHs) and polychlorinated biphenyls (PCBs). The proposed revisions will improve the accuracy of Method 23 and will provide flexibility to stack testers and analytical laboratories who measure semivolatile organic compounds (SVOC) from stationary sources while ensuring that the stack testing community can consistently implement the method across emissions sources and facilities.

DATES: *Comments.* Comments must be received on or before March 16, 2020.

ADDRESSES: *Comments:* Submit your comments, identified by Docket ID No. EPA–HQ–OAR–2016–0677, at *https://www.regulations.gov.* Follow the online instructions for submitting comments. Once submitted, comments cannot be edited or removed from *Regulations.gov.* See **SUPPLEMENTARY INFORMATION** section for details about how the Environmental Protection Agency (EPA) treats submitted comments. *Regulations.gov* is our preferred method of receiving comments. However, the following other submission methods are also accepted:

- *Email: a-and-r-docket@epa.gov.* Include Docket ID No. EPA–HQ–OAR–2016–0677 in the subject line of the message.
- *Fax:* (202) 566–9744. Attention Docket ID No. EPA–HQ–OAR–2016–0677.
- *Mail:* To ship or send mail via the United States Postal Service, use the following address: U.S. Environmental Protection Agency, EPA Docket Center, Docket ID No. EPA–HQ–OAR–2016–0677, Mail Code 28221T, 1200 Pennsylvania Avenue NW, Washington, DC 20460.
- *Hand/Courier Delivery:* Use the following Docket Center address if you are using express mail, commercial delivery, hand delivery, or courier: EPA Docket Center, EPA WJC West Building, Room 3334, 1301 Constitution Avenue NW, Washington, DC 20004. Delivery verification signatures will be available only during regular business hours.

FOR FURTHER INFORMATION CONTACT: Dr. Raymond Merrill, Office of Air Quality Planning and Standards, Air Quality Assessment Division (E143–02), Environmental Protection Agency, Research Triangle Park, NC 27711; telephone number: (919) 541–5225; fax number: (919) 541–0516; email address: *merrill.raymond@epa.gov.*

SUPPLEMENTARY INFORMATION:

Public Participation

A. Written Comments

Submit your comments, identified by Docket ID No. EPA–HQ–OAR–2016–0677, at *https://www.regulations.gov* (our preferred method), or the other methods identified in the **ADDRESSES** section. Once submitted, comments cannot be edited or removed from the docket. The EPA may publish any comment received to its public docket. Do not submit electronically any information you consider to be Confidential Business Information (CBI) or other information whose disclosure is restricted by statute. Multimedia submissions (audio, video, etc.) must be accompanied by a written comment. The written comment is considered the official comment and should include discussion of all points you wish to make. The EPA will generally not consider comments or comment contents located outside of the primary submission (*i.e.,* on the Web, cloud, or other file sharing system). For additional submission methods, the full EPA public comment policy, information about CBI or multimedia submissions, and general guidance on making effective comments, please visit *https://www.epa.gov/dockets/commenting-epa-dockets.*

Submitting CBI: Clearly mark the part or all of the information that you claim to be CBI. For CBI information in a disk or CD–ROM that you mail to the EPA, mark the outside of the disk or CD–ROM as CBI and then identify electronically within the disk or CD–ROM the specific information that is claimed as CBI. In addition to one complete version of the comment that includes information claimed as CBI, a copy of the comment that does not contain the information claimed as CBI must be submitted for inclusion in the public docket. Information marked as CBI will not be disclosed except in accordance with procedures set forth in Title 40 Code of Federal Regulations (CFR) part 2.

Do not submit information that you consider to be CBI or otherwise protected through *https://www.regulations.gov* or email. Send or deliver information identified as CBI to only the following address: OAQPS Document Control Officer (Room C404–02), U.S. EPA, Research Triangle Park, NC 27711, Attention Docket ID No. EPA–HQ–OAR–2016–0677.

If you have any questions about CBI or the procedures for claiming CBI, please consult the person identified in the **FOR FURTHER INFORMATION CONTACT** section.

Docket: All documents in the docket are listed in the *https://www.regulations.gov* index. Although listed in the index, some information is not publicly available, *e.g.,* CBI (Confidential Business Information) or other information whose disclosure is restricted by statute. Certain other material, such as copyrighted material, will be publicly available only in hard copy. Publicly available docket materials are available either electronically in *https://www.regulations.gov* or in hard copy at the EPA Docket Center, EPA/DC, EPA WJC West Building, Room 3334, 1301 Constitution Ave. NW, Washington, DC. This Docket Facility is open from 8:30 a.m. to 4:30 p.m., Monday through Friday, excluding legal holidays. The telephone number for the Public Reading Room is (202) 566–1744, and the telephone number for the Air Docket is (202) 566–1742.

B. Participation at Public Hearing

Public hearing. If a public hearing is requested by January 21, 2020, then we will hold a public hearing at the EPA William Jefferson Clinton (WJC) East Building, 1201 Constitution Avenue NW, Washington, DC 20004. If a public hearing is requested, additional details about the public hearing will be provided in a separate **Federal Register** notice and on our website at *https://www3.epa.gov/ttn/emc/methods.* To request a hearing, to register to speak at a hearing, or to inquire if a hearing will be held, please contact Raymond Merrill

by email at *merrill.raymond@epa.gov* or phone at (919) 541–5225. The last day to pre-register in advance to speak at the public hearing will be January 27, 2020. If held, the public hearing will convene at 9:00 a.m. (local time) and will conclude at 4:00 p.m. (local time).

Because this hearing is being held at a U.S. government facility, individuals planning to attend the hearing should be prepared to show valid picture identification to the security staff in order to gain access to the meeting room. Please note that the REAL ID Act, passed by Congress in 2005, established new requirements for entering federal facilities. For purposes of the REAL ID Act, EPA will accept government-issued IDs, including drivers' licenses, from the District of Columbia and all states and territories except from American Samoa. If your identification is issued by American Samoa, you must present an additional form of identification to enter the federal building where the public hearing will be held. Acceptable alternative forms of identification include: Federal employee badges, passports, enhanced driver's licenses, and military identification cards. For additional information for the status of your state regarding REAL ID, go to: *https://www.dhs.gov/real-id-enforcement-brieffrequently-asked-questions.* Any objects brought into the building need to fit through the security screening system, such as a purse, laptop bag, or small backpack. Demonstrations will not be allowed on federal property for security reasons.

Table of Contents

The following outline is provided to aid in locating information in this preamble.

I. General Information

A. Does this action apply to me?
B. Where can I get a copy of this document and other related information?

II. Background

III. Incorporation by Reference

IV. Summary of Proposed Revisions to Method 23

A. Section 1.0
B. Section 2.0
C. Section 3.0
D. Section 4.0
E. Section 5.0
F. Section 6.0
G. Section 7.0
H. Section 8.0
I. Section 9.0
J. Section 10.0
K. Section 11.0
L. Section 12.0
M. Section 13.0
N. Section 14.0
O. Section 15.0
P. Section 16.0
Q. Section 17.0

V. Summary of Proposed Revisions Related to 40 CFR Parts 60, 63, and 266

A. 40 CFR Part 60—Standards of Performance for New Stationary Sources
B. 40 CFR Part 63—National Emission Standards for Hazardous Air Pollutants for Source Categories
C. 40 CFR Part 266—Standards for the Management of Specific Hazardous Wastes and Specific Types of Hazardous Waste Management Facilities

VI. Statutory and Executive Order Reviews

A. Executive Order 12866: Regulatory Planning and Review and Executive Order 13563: Improving Regulation and Regulatory Review
B. Executive Order 13771: Reducing Regulations and Controlling Regulatory Costs
C. Paperwork Reduction Act (PRA)
D. Regulatory Flexibility Act (RFA)
E. Unfunded Mandates Reform Act (UMRA)
F. Executive Order 13132: Federalism
G. Executive Order 13175: Consultation and Coordination With Indian Tribal Governments
H. Executive Order 13045: Protection of Children From Environmental Health Risks and Safety Risks
I. Executive Order 13211: Actions that Significantly Affect Energy Supply, Distribution, or Use
J. National Technology Transfer and Advancement Act (NTTAA)
K. Executive Order 12898: Federal Actions To Address Environmental Justice in Minority Populations and Low-Income Populations

I. General Information

A. Does this action apply to me?

The proposed amendments to Method 23 apply to industries that are subject to certain provisions of parts 60, 62, 63, 79, and 266. The source categories and entities potentially affected are listed in Table 1. This table is not intended to be exhaustive, but rather provides a guide for readers regarding entities likely to be regulated by this action. This table lists the types of entities that EPA is now aware could potentially be affected by this action. Other types of entities not listed in the table could also be regulated.

TABLE 1—POTENTIALLY AFFECTED SOURCE CATEGORIES

Category	NAICSY [a]	Examples of regulated entities
Industry	332410	Fossil fuel steam generators.
	332410	Industrial, commercial, institutional steam generating units.
	562213	Municipal Waste Combustors.
	322110	Hazardous Waste Combustors.
	325211	Polyvinyl Chloride Resins Manufacturing.
	327310	Portland cement plants.
	324122	Asphalt Shingle and Coating Materials Manufacturing.
	331314	Secondary aluminum plants.
	327120	Clay Building Material and Refractories Manufacturing.
	331410	Nonferrous Metal (except Aluminum) Smelting and Refining.

[a] North American Industry Classification System.

If you have any questions regarding the applicability of the proposed changes to Method 23, contact the person listed in the preceding **FOR FURTHER INFORMATION CONTACT** section.

B. Where can I get a copy of this document and other related information?

The docket number for this action is Docket ID No. EPA–HQ–OAR–2016–0677. In addition to being available in the docket, an electronic copy of the proposed method revisions is available on the Technology Transfer Network (TTN) website at *https://www3.epa.gov/ttn/emc/methods/.* The TTN provides information and technology exchange in various areas of air pollution control.

II. Background

The EPA's Method 23 (Determination of Polychlorinated Dibenzo-p-Dioxins and Polychlorinated Dibenzofurans from Stationary Sources) is our current reference test method for determination

of polychlorinated dibenzo-p-dioxins (PCDDs) and polychlorinated dibenzofurans (PCDFs) emitted from stationary sources.

The EPA promulgated Method 23 (Appendix A of 40 CFR part 60, Test Methods) on February 13, 1991 (56 FR 5758). Since promulgation, the measurement of PCDDs and PCDFs has evolved as analytical laboratories, EPA, and state entities have developed new standard operating procedures and methods to reflect improvements in sampling and analytical techniques. Examples of newer PCDD/PCDF methods include:

- Office of Land and Emergency Management (OLEM) Solid Waste (SW) SW–846 EPA Method 8290A, Polychlorinated Dibenzo-p-Dioxins and Polychlorinated Dibenzofurans (PCDFs) by High-Resolution Gas Chromatography/High-Resolution Mass Spectrometry (HRGC/HRMS);
- Office of Water (OW) EPA Method 1613, Tetra- through Octa-Chlorinated Dioxins and Furans by Isotope Dilution HRGC/HRMS; and
- California Environmental Protection Agency Air Resources Board (CARB) Method 428, Determination of Polychlorinated Dibenzo-p-Dioxin (PCDD), Polychlorinated Dibenzofuran (PCDF), and Polychlorinated Biphenyls Emissions from Stationary Sources.

Beginning in 2016, the EPA held a series of informal discussions with stakeholders in the measurement community to identify technical issues related to the sampling and analysis of PCDD and PCDF and potential revisions to Method 23. The stakeholders consisted of a cross section of interested parties including representatives from state regulatory entities, various EPA offices, analytical laboratories, emission testing firms, analytical standards vendors, instrument vendors, and others with experience in sampling and analysis of PCDD and PCDF and with the equipment, materials, and performance of Method 23 and other PCDD/PCDF methods. In the discussions, EPA also sought stakeholder input regarding their experience combining procedures for sampling and analysis of PCDD and PCDF with procedures for sampling and analysis of PAHs and PCBs emitted from stationary sources. The docket contains summaries of the stakeholder discussions.

III. Incorporation by Reference

The EPA proposes to incorporate by reference ASTM D6911–15 and ASTM D4840–99(2018)e1 in Method 23. The ASTM D6911–15 includes a guide for packaging and shipping environmental samples for laboratory analysis and ASTM D4840–99(2018)e1 includes a standard guide for sample chain-of-custody procedures. These standards were developed and adopted by the American society for Testing and Materials and may be obtained from *https://www.astm.org* or from the ASTM at 100 Barr Harbor Drive, P.O. Box C700, West Conshohocken, PA 19428–2959.

IV. Summary of Proposed Revisions to Method 23

In this action, we are proposing technical revisions and editorial changes to clarify and update the requirements and procedures specified in Method 23. We are also proposing to reformat the method to conform with EPA's current method format (see *https://www.epa.gov/measurements-modeling/method-development#format*). We are proposing to expand the applicability of Method 23 to include procedures for sampling and analyzing PAHs and PCBs. In addition, we are proposing revisions to various sections of the CFR that either require Method 23 or require the analysis of PCDDs/PCDFs, PAHs, or PCBs.

Our intent for the proposed revisions is to ensure that Method 23 is implemented consistently and to update the method procedures to include performance-based quality requirements that add flexibility rather than the prescriptive requirements currently described in the method.

The primary focus of the proposed revisions to Method 23 is to change the method from a prescriptive method to a performance-based method, which will allow users to have flexibility in implementing the method (*e.g.,* choice of gas chromatograph (GC) column, the procedures used for sample cleanup) while still meeting performance criteria that the EPA believes are necessary for demonstrating and documenting the quality of the measurements for the target compounds. The proposed revisions also address concerns over recovery of target compounds from particulate matter by requiring a pre-extraction filter spike recovery procedure and acceptance criteria for the filter spike recovery. These new requirements resolve the concerns that led to the criteria in 40 CFR 63.1208 that required Administrator approval prior to use of Method 23 for measurement of PCDDs/PCDFs.

The EPA's second focus for the proposed revisions is to convert the method entirely to quantitation based on isotope dilution. These revisions to the method are possible because additional isotopically labeled standards for the target compounds have become available from vendors since the original promulgation of Method 23.

The third major focus for the EPA's proposed revision to Method 23 is to include options for combining sampling and analysis of PCDDs/PCDFs with PAHs and PCBs to allow the measurement of toxic SVOC. In addition, adding PCBs and PAHs to the list of target compounds measured by Method 23 is responsive to multiple requests for alternative method approval from facilities and source test teams that are responding to EPA information collection requests (ICRs).

The EPA's proposed amendments to Method 23 are presented below for each section of Method 23.

A. Section 1.0

In this action, EPA is proposing to rename section 1.0 from ''Applicability and Principle'' to ''Scope and Application,'' and revise the text to expand the target compounds for Method 23 to include PCBs and PAHs. We are also proposing to add statements that emphasize the need for working knowledge of the EPA Methods 1 through 5 of appendices A–1, A–2, and A–3 to 40 CFR part 60, and the use of high-resolution gas chromatography/high-resolution mass spectrometry (HRGC/HRMS) when applying Method 23. We are also proposing language to specify that Method 23 is performance-based and to allow users to modify parts of the method to overcome interferences or to substitute alternative materials and equipment provided that all performance criteria in the method are met.

B. Section 2.0

The EPA is proposing to rename section 2.0 from ''Apparatus'' to ''Summary of Method,'' and revise section 2.0 with language to provide an overview of the method's sampling and analytical procedures. We are also proposing to move the current language in section 2.0, which describes the materials needed to conduct Method 23, to a proposed new section 6.0.

C. Section 3.0

The current version of Method 23 does not include definitions of key terms and variables used in Method 23. In this action, we are proposing to add a new section 3.0 titled ''Definitions,'' absent in the current promulgated version of Method 23. We are providing definitions to acronyms and technical terms to improve the clarity of the method principles and procedures. We also propose to move language from the

current section 3.0 to a proposed new section 7.0.

D. Section 4.0

The current version of Method 23 does not discuss the conditions that can potentially interfere with measurements obtained when using the method. In this action, we are proposing to add a new section 4.0 titled ''Interferences,'' that would present the potential causes and recommendations for avoiding or mitigating interferences or sample contamination. We also propose to move language from the current section 4.0 to a proposed new section 8.0.

E. Section 5.0

Currently, Method 23 does not provide procedures for safety. In this action, we are proposing to add a new section 5.0 titled ''Safety,'' that would present the health hazards and procedures for minimizing risks to field and laboratory personnel when conducting Method 23. We also propose to move language from the current section 5.0 to a proposed new section 11.0.

F. Section 6.0

In this action, we are proposing to renumber and move the text in section 2.0 (Apparatus) of the current method to section 6.0 titled ''Equipment and Supplies,'' and to make clarifying edits and technical revisions to the specifications in this section. Table 2 of this preamble identifies the proposed new numbering for the subsections currently in section 2.0 and Table 3 of this preamble identifies new specifications (and the associated subsection) we are proposing to include in section 6.0.

TABLE 2—CROSSWALK FOR PROPOSED REVISIONS TO CURRENT METHOD SECTIONS

Description	Current section	Proposed section
Filter holder	2.1.1	6.1.3
Condenser	2.1.2	6.1.7
Water circulating bath	2.1.3	6.1.8
Absorbent module	2.1.4	6.1.9
Fitting cap	2.2.1	6.2.1
Wash bottles	2.2.2	6.2.2
Filter storage container	2.2.4	6.2.4
Field balance	2.2.5	6.2.5
Aluminum foil	2.2.6	6.2.6
Glass sample storage containers	2.2.9	6.2.8
Extraction thimble	2.3.4	6.3.3.3
Pasteur pipette	2.3.5	6.4.1
GC oven	2.3.10.1	6.5.1.1
Temperature monitor for GC oven	2.3.10.2	6.5.1.2
GC Flow system	2.3.10.3	6.5.1.3
Capillary column	2.3.10.4	6.5.2
Mass spectrometer	2.3.11	6.5.3
Mass spectrometer data system	2.3.12	6.5.4

TABLE 3—PROPOSED ADDITIONAL SPECIFICATIONS FOR SECTION 6.0

Description	Proposed section
Probe liner	6.1.2
Filter heating system	6.1.4
Filter temperature sensor	6.1.5
Sample transfer line	6.1.6
Impingers	6.1.10
Soxhlet extraction apparatus	6.3.3.1
Moisture trap of extraction apparatus	6.3.3.2
Kuderna-Danish concentrator	6.3.4
Heating mantle	6.3.3.4
Chromatography column	6.4.2
Injection port	6.5.1.4
PCDD/PCDF column system	6.5.2.1
PAH column system	6.5.2.2
PCB column system	6.5.2.3

In this section, we are also proposing to:

- Prohibit the use of brominated flame-retardant coated tape in assembling the sampling train to avoid sample contamination;
- Revise the specification for a rotary evaporator with specifications for a Kuderna-Danish concentrator to avoid the loss of higher vapor pressure target compounds;
- Remove specifications for the graduated cylinder to improve the accuracy of moisture measurements and to make Method 23 more consistent with other isokinetic sampling methods; and
- Remove the volume requirement for wash bottles to allow greater flexibility in field sample recovery.

We are also proposing to move language from Method 23's current section 6.0 to a proposed new section 10.0.

G. Section 7.0

In this action, the EPA is proposing to renumber and move the text in section 3.0 (Reagents) of the current method to a new section 7.0 titled ''Reagents, Media and Standards,'' and to make clarifying edits and technical revisions to the specifications in this section. Table 4 of this preamble identifies the

proposed new numbering for the subsections currently in section 3.0 and Table 5 of this preamble identifies new specifications (and the associated subsection) we are proposing to include in section 7.

TABLE 4—CROSSWALK FOR PROPOSED REVISIONS TO CURRENT METHOD SECTIONS

Description	Current section	Proposed section
Filter	3.1.1	7.1
Adsorbent resin	3.1.2	7.2
Glass wool	3.1.3	7.3
Water	3.1.4	7.4
Methylene chloride	3.2.2	7.6
Sodium sulfate	3.3.2	7.8.2
Basic alumina	3.3.13	7.8.9.1.2
Silica gel	3.3.14	7.8.9.3
Carbon/Celite®	3.3.17	7.8.9.4
Nitrogen	3.3.18	7.8.10

TABLE 5—PROPOSED ADDITIONAL SPECIFICATIONS FOR SECTION 7.0

Description	Proposed section
High-boiling alkanes used as keeper solvents	7.8.8
Liquid column packing materials	7.8.9
Acidic alumina	7.8.9.1.1
Florisil®	7.8.9.2
Helium	7.9.1
Spiking standards	7.9.2
Pre-sampling recovery standard solution	7.9.3
Filter recovery spike standard solution	7.9.4
Pre-extraction recovery standard solution	7.9.5
Pre-analysis recovery standard solution	7.9.6

We are proposing to replace the filter precleaning procedures of the current method with specifications for conducting a filter quality control check. We are proposing to delete unnecessary specifications presented in Table 6 to reflect modern methods. We are also proposing to rename the isotopic spiking standard mixtures to simple English names that relate the standards to their use in the proposed method.

TABLE 6—PROPOSED DELETIONS OF MATERIAL SPECIFICATIONS IN THE CURRENT METHOD 23

Material	Current section
Chromic acid cleaning solution	3.1.6
Benzene	3.3.7
Ethyl acetate	3.3.8
Nonane	3.3.11
Cyclohexane	3.3.12
Hydrogen	3.3.19
Internal standard solution	3.3.20
Surrogate standard solution	3.3.21
Recovery standard solution	3.3.22

We are also proposing to move the current section 7.0 to a proposed new section 9.0.

H. Section 8.0

In this action, the EPA is proposing to renumber and move the text in section 4.0 (Procedure) of the current method to a new section 8.0 titled ''Sample Collection, Preservation and Storage,'' and to make clarifying edits and technical revisions to the current procedures for sampling and sample recovery. As proposed, the new section 8 also would include added requirements for sample storage conditions and holding times.

Under the sampling procedures of Method 23, we are proposing revisions to the current requirements in section 4.1.1 for pretest preparations. Table 7 of this preamble identifies the new numbering to revise and replace the requirements in section 4.1.

TABLE 7—CROSSWALK FOR PROPOSED REVISIONS TO CURRENT METHOD SECTIONS

Description	Current section	Proposed section
Glassware cleaning	4.1.1.1	8.1.1.1
Assembling the adsorbent module	4.1.1.2	8.1.1.2
Maintaining the sampling train components	4.1.1.3	8.1.1.3
Silica Gel	4.1.1.4	8.1.1.4

TABLE 7—CROSSWALK FOR PROPOSED REVISIONS TO CURRENT METHOD SECTIONS—Continued

Description	Current section	Proposed section
Checking and packing filters	4.1.1.5	8.1.1.5
Field preparation of the sampling train	4.1.3.1	8.1.3.1
Impinger assembly	4.1.3.2	8.1.3.2
Sampling probe and nozzle preparation	4.1.3.4	8.1.3.4

Table 8 of this preamble shows the specifications we are proposing to add to the new section 8.0. We are proposing a minimum sample volume to assure that stack testers can attain the detection limits consistent with current regulations. Sampling time requirements at each traverse point for continuous industrial processes align Method 23 with other isokinetic stationary source methods, such as Method 5. The sampling time at each traverse point for batch industrial processes ensure measurements are made for the entire process cycle. The proposed filter check requirements add details that were absent from the original Method 23 and align the method with the requirements of other isokinetic stationary source methods, such as Methods 5, 26A, and 29, also in Appendix A of this part. The proposed absorbent module orientation requirements clarify the configuration of the absorbent module to ensure that condensed moisture flows through the module into the water collection impinger. We are proposing to add filter monitoring requirements to align Method 23 with other isokinetic stationary source methods. Also, we are proposing to add adsorbent module temperature monitoring to confirm that the sorbent material was not exposed to elevated temperatures that could bias sample collection and results.

TABLE 8—PROPOSED ADDITIONAL SPECIFICATIONS FOR SECTION 8.1

Description	Proposed section
Minimum sample volume	8.1.2.1
Sampling time for continuous processes	8.1.2.2
Sampling time for batch processes	8.1.2.3
Filter assembly	8.1.3.3
Orientation of the condenser and adsorbent module	8.1.3.4
Monitoring the filter temperature	8.1.5.1
Monitoring the adsorbent module temperature	8.1.5.2

Under sample recovery procedures, we are proposing technical revisions as shown in Table 9 of this preamble. In this action, we are also proposing to add a recommendation to use clean glassware and to add specifications as shown in Table 10 of this preamble.

TABLE 9—CROSSWALK FOR PROPOSED REVISIONS TO CURRENT METHOD SECTIONS

Description	Current section	Proposed section
Adsorbent module sample preparation	4.2.2	8.2.5
Preparation of Container No. 2	4.1.1.2	8.2.6
Rinsing of the filter holder and condenser	4.1.1.3	8.2.7
Weighing impinger water	4.1.1.5	8.2.8
Preparation of Container No. 3	4.1.3.1	8.2.9
Silica gel	4.1.3.2	8.2.10

TABLE 10—PROPOSED ADDITIONAL SPECIFICATIONS FOR SECTION 8.2

Description	Proposed section
Conducting a post-test leak check	8.2.1
Storage conditions for Container No. 1	8.2.4
Field sample handling, storage, and transport	8.2.11
Sample chain of custody	8.2.12

In new section 8.2.8, we propose to measure moisture by weight rather than by volume.

I. Section 9.0

In this action, the EPA is proposing to move and renumber the current section 7.0 (Quality Control) to a new section 9.0 titled ''Quality Control,'' and to make clarifying and technical revisions to the section. We are proposing to add an introductory note that addresses maintaining and documenting quality control compliance required in Method 23. We would add a new subsection that clarifies the recordkeeping and reporting necessary to demonstrate compliance with quality control requirements of this method. We are also proposing to add specifications for conducting pre-sampling, pre-extraction, and pre-analysis spike recoveries of isotopically-labeled standards and to add specifications for:

- Capillary gas chromatography columns;

- Preparing and analyzing batch blanks;
- Determining the method detection limit; and
- Assessing field train proof blanks.

We are also proposing to move language from the current section 9.0 to a proposed new section 12.0.

J. Section 10.0

In this action, the EPA is proposing to renumber and move the text in section 6.0 (Calibration) of the current method to a new section 10.0 titled ''Calibration and Standardization,'' and to make clarifying and technical revisions to the specifications for calibrating the sampling and the HRGC/HRMS systems. We are proposing to add specifications for tuning the HRGC/HRMS system, to move the specification for HRMS resolution (currently in section 5) to this proposed section, to add procedures for assessing the relative standard deviation for the mean instrument response, and to add procedures for determining the signal-to-noise ratio of the MS to bring Method 23 up to date with current laboratory practice. We are also proposing to add requirements for ion abundance ratio limits, initial calibrations, and resolution checks under the daily performance check to serve as performance indicators for analysis quality. We are also proposing to move language in the current section 10.0 to a proposed new section 16.0.

K. Section 11.0

In this action, the EPA is proposing to renumber and move the text in section 5.0 (Analysis) of the current method to a new section 11.0 titled ''Analysis Procedure,'' and to make clarifying and technical revisions to the current specifications for sample extraction and sample cleanup and fractionation. We are also proposing to add a new subsection describing how sample extract aliquots are prepared for cleanup and analysis.

We are also proposing to add the specifications and recommendations for analysis procedures shown in Table 11 of this preamble.

TABLE 11—PROPOSED ADDITIONAL SPECIFICATIONS FOR SECTION 11.0

Description	Proposed section
Preparing and operating the extraction apparatus	11.1.7 through 11.1.9.
Cooling the extraction apparatus	11.2.1.
Performing an initial extract concentration	11.2.2.
Cooling the sample extract	11.2.3.
Recommended minimum volume for PCDD/PCDF analysis	11.2.3.
Further concentration of sample (if needed) for cleanup and analysis	11.2.4.
Sample cleanup and fractionation for PAHs and PCDEs	11.3.1.
Sample cleanup and fractionation for PCDD/DFs and PCBs	11.3.2.
Addressing unresolved compounds	11.4.1.2.1.
Retention time for PCBs	11.4.3.4.5.
Chlorodiphenyl ether interference of PCDD/DFs	11.4.3.4.8.
MS lock channels	11.4.3.4.9.
Calculations of target mass and mass per dry standard cubic meter	11.4.3.5.1 and 11.4.3.5.2.
Quantifying indigenous PCDD/DFs	11.4.3.5.3.
Reporting options compound concentrations	11.4.3.5.4 through 11.4.3.5.6.
Identification criteria for PAHs	11.4.3.4.10.

L. Section 12.0

In this action, the EPA is proposing to renumber and move the text in section 9.0 (Calculations) of the current method to a new section 12.0 titled ''Data Analysis and Calculations,'' and to revise the equation variable list. We are proposing to revise the equations shown in Table 12 of this preamble to incorporate isotope dilution calculations.

TABLE 12—PROPOSED EQUATION REVISIONS FOR SECTION 12.0

Current equation	Description	Proposed section
23–2	Average relative response factor (RRF) for each compound	12.3
23–6	Concentration of individual target compound i in the extract by isotope dilution	12.7
23–9	Recovery of Labeled Compound Standards	12.10
23–10	Estimated detection limit	12.11
23–11	Total concentration	12.12

We are also proposing to remove and replace the current equations in Method 23 with the equations shown in Table 13 of this preamble to accommodate the proposed changes to the method procedures.

TABLE 13—PROPOSED ADDITIONAL EQUATIONS FOR SECTION 12.0

Equation	Description	Proposed section
23–1	Individual compound RRF for each calibration level	12.2
23–3	Percent relative standard deviation of the RRFs for a compound over the five calibration levels	12.4
23–4	Standard deviation of the RRFs for a compound over the five calibration levels	12.5
23–5	Percent difference of the RRF of the continuing calibration verification compared to the average RRF from the initial calibration for each target compound.	12.6
23–7	Concentration of individual target compound i in the sample extract	12.8

TABLE 13—PROPOSED ADDITIONAL EQUATIONS FOR SECTION 12.0—Continued

Equation	Description	Proposed section
23–8	Concentration of the Individual Target Compound or Group i in the Emission Gas	12.9

M. Section 13.0

In this action, the EPA is proposing to add a new section 13.0 titled ''Method Performance,'' that would include the specifications shown in Table 14 of this preamble.

TABLE 14—PROPOSED METHOD PERFORMANCE SPECIFICATIONS FOR SECTION 13.0

Description	Proposed section
Quality control checks of filters, adsorbent resin, glass wool, and batch blanks	13.1, 13.2, and 13.14.
Field train proof blanks	13.2.
GC column systems used to measure PCDD/F, PAH, and PCB target compounds	13.3 through 13.6.
Acceptability of detection limits	13.7.
Tuning HRGC/HRMS systems	13.8.
MS lock channels	13.9.
Initial and continuing calibrations	13.10 and 13.11.
Identification of target compounds	13.12 and 13.13.
Pre-sampling, -extraction, and –analysis spike recoveries	13.15 and 13.16.
Pre-analysis spike sensitivity requirements	13.17.
Modifications of the method	13.18 and 13.19.

N. Section 14.0

In this action, the EPA is proposing to add a new section 14.0 titled ''Pollution Prevention,'' that specifies the procedures for minimizing or preventing pollution associated with preparing and using Method 23 standards.

O. Section 15.0

In this action, the EPA is proposing to add a new section 15.0 titled ''Waste Management,'' that specifies the laboratory responsibilities for managing the waste streams associated with collecting and analyzing Method 23 samples.

P. Section 16.0

In this action, the EPA is proposing to renumber and move the text in section 10.0 (Bibliography) of the current method to a new section 16.0 titled ''References.'' We are proposing to delete previous reference numbers 3 and 4 that are no longer relevant and to add new citations for the following references:

- Fishman, V.N., Martin, G.D. and Lamparski, L.L. Comparison of a variety of gas chromatographic columns with different polarities for the separation of chlorinated dibenzo-p-dioxins and dibenzofurans by high-resolution mass spectrometry. Journal of Chromatography A 1139 (2007) 285–300.
- International Agency for Research on Cancer. Environmental Carcinogens Methods of Analysis and Exposure Measurement, Volume 11—Polychlorinated Dioxins and Dibenzofurans. IARC Scientific Publications No. 108, 1991.
- Stieglitz, L., Zwick, G., Roth, W. Investigation of different treatment techniques for PCDD/PCDF in fly ash. Chemosphere 15: 1135–1140; 1986.
- Triangle Laboratories. Case Study: Analysis of Samples for the Presence of Tetra Through Octachloro-p-Dibenzodioxins and Dibenzofurans. Research Triangle Park, NC. 1988. 26 p.
- U.S. Environmental Protection Agency. Office of Air Programs Publication No. APTD–0576: Maintenance, Calibration, and Operation of Isokinetic Source Sampling Equipment. Research Triangle Park, NC. March 1972.
- U.S. Environmental Protection Agency. Method 1625C-Semivolatile Organic Compounds by Isotope Dilution GCMS.
- U.S. Environmental Protection Agency. Method 1613B-Tetra- through Octa-Chlorinated Dioxins and Furans by Isotope Dilution HRGC/HRMS.
- U.S. Environmental Protection Agency. Method 1668C-Chlorinated Biphenyl Congeners in Water, Soil, Sediment, Biosolids, and Tissue by HRGC/HRMS.
- Tondeur, Y., Nestrick, T., Silva, Héctor A., Vining, B., Hart, J. Analytical procedures for the determination of polychlorinated-p-dioxins, polychlorinated dibenzofurans, and hexachlorobenzene in pentachlorophenol. Chemosphere Volume 80, Issue 2, June 2010, pages 157–164.

Q. Section 17.0

In this action, the EPA is proposing to add a new section 17 titled ''Tables, Diagrams, Flow Charts, and Validation Data,'' that will contain all tables, diagrams, flow charts, and validation data referenced in Method 23. We are proposing to revise Figures 23–1 and 23–2 and to rename and/or renumber the current Method 23 tables as shown in Table 15 of this preamble.

TABLE 15—PROPOSED REVISIONS TO METHOD 23 TABLES

Current method	Proposed method
Table 1—Composition of the Sample Fortification and Recovery Standards Solutions.	Table 23–7. Composition of the Sample Fortification and Recovery Standard Solutions for PCDDs and PCDFs.
Table 2—Composition of the Initial Calibration Solutions	Table 23–11. Composition of the Initial Calibration Standard Solutions for PCDDs and PCDFs.

TABLE 15—PROPOSED REVISIONS TO METHOD 23 TABLES—Continued

Current method	Proposed method
Table 3—Elemental Compositions and Exact Masses of the Ions Monitored by High Resolution Mass Spectrometry for PCDD's and PCDF's.	Table 23–4. Elemental Compositions and Exact Masses of the Ions Monitored by High-Resolution Mass Spectrometry for PCDDs and PCDFs.
Table 4—Acceptable Ranges for Ion-Abundance Ratios of PCDD's and PCDF's.	Table 23–15. Recommended Ion Type and Acceptable Ion Abundance Ratios.
Table 5—Minimum Requirements for Initial and Daily Calibration Response Factors.	Table 23–14. Minimum Requirements for Initial and Daily Calibration Response Factors for Isotopically Labeled and Native Compounds.

We are also proposing to add Figure 23–3 (Soxhlet/Dean-Stark Extractor) and Figure 23–4 (Sample Preparation Flow Chart) and to add the tables specified in Table 16 of this preamble.

TABLE 16—ADDITIONAL PROPOSED TABLES TO METHOD 23

Proposed table	Description
23–1	Polychlorinated Dibenzo-p-dioxin and Polychlorinated Dibenzofuran Target Analytes.
23–2	Polycyclic Aromatic Hydrocarbon Target Analytes.
23–3	Polychlorinated Biphenyl Target Analytes.
23–5	Elemental Compositions and Exact Masses of the Ions Monitored by High-Resolution Mass Spectrometry for PAHs.
23–6	Elemental Compositions and Exact Masses of the Ions Monitored by High-Resolution Mass Spectrometry for PCBs.
23–8	Composition of the Sample Fortification and Recovery Standard Solutions for PAHs.
23–9	Composition of the Sample Fortification and Recovery Standard Solutions for PCBs.
23–10	Sample Storage Conditions and Laboratory Hold Times.
23–12	Composition of the Initial Calibration Standard Solutions for PAHs.
23–13	Composition of the Initial Calibration Standard Solutions for PCBs.
23–16	Typical DB5–MS Column Conditions.
23–17	Assignment of Pre-extraction Standards for Quantitation of Target PCBs.
23–18	Estimated Method Detection Limits for PCDDs and PCDFs.
23–19	Target Detection Limits for PAHs.
23–20	Estimated Method Detection Limits for PCBs.

V. Summary of Proposed Revisions Related to 40 CFR Parts 60, 63, and 266

A. 40 CFR Part 60—Standards of Performance for New Stationary Sources

In 40 CFR 60.17(h), we propose to incorporate by reference ASTM D4840–99(2018)e1, Standard Guide for Sample Chain-of-Custody Procedures, and to amend the reference to ASTM D6911–15, Guide for Packaging and Shipping Environmental Samples for Laboratory Analysis, to include for use in Method 23.

In Subpart CCCC, we propose to revise § 60.2125(g)(2) and (j)(2) to realign the requirement for quantifying isomers to the reorganized section 11.4.2.4 in the proposed revision of Method 23.

In Subpart DDDD, we propose to revise § 60.2690(g)(2) and (j)(2) to realign the requirement for identifying isomers to the reorganized section 11.4.2.4 in the proposed revision of Method 23.

B. 40 CFR Part 63—National Emission Standards for Hazardous Air Pollutants for Source Categories

In 40 CFR 63.849(a)(13), we propose to replace California Air Resources Board (CARB) Method 428 with Method 23 for the measurement of PCB emissions from roof monitors not employing wet roof scrubbers.

In 40 CFR 63.1208, we propose to remove the requirement for administrator's approval to use Method 23 for measuring PCDD/PCDF emissions from hazardous waste combustors.

In 40 CFR 63.1625(b)(10), we propose to replace CARB Method 429 with Method 23 for measuring the emissions of PAH from ferromanganese electric arc furnaces.

In Subpart AAAAAAA, Table 3, we propose to replace the requirement for analysis of PAH by SW–846 Method 8270 with a requirement to use Method 23. Specifically, we are deleting ''with analysis by SW 846 Method 8270D'' in row 6 of Table 3. Since revisions to Method 23 propose to eliminate the use of methylene chloride, we also propose to remove footnote ''b'' in Table 3.

C. 40 CFR Part 266—Standards for the Management of Specific Hazardous Wastes and Specific Types of Hazardous Waste Management Facilities

In 40 CFR 266.104, we propose to add Method 23 as an alternative to SW–846 Method 0023A.

VI. Statutory and Executive Order Reviews

Additional information about these statutes and Executive Orders can be found at *https://www2.epa.gov/laws-regulations/laws-and-executive-orders.*

A. Executive Order 12866: Regulatory Planning and Review and Executive Order 13563: Improving Regulation and Regulatory Review

This action is not a significant regulatory action and was, therefore, not submitted to the Office of Management and Budget (OMB) for review.

B. Executive Order 13771: Reducing Regulations and Controlling Regulatory Costs

This action is expected to be an Executive Order 13771 deregulatory action. This proposed rule is expected to provide meaningful burden reduction by improving the accuracy of Method 23, improving data quality, and providing source testers flexibility by providing a performance-based approach and incorporating approved alternative procedures into the regulatory measurement method. This proposed action does not impose any requirements on owners/operators to

use Method 23 but provides instruction on how to use Method 23 if required to do so by an EPA source category regulation.

C. Paperwork Reduction Act (PRA)

This proposed action does not impose an information collection burden under the PRA. The revisions being proposed in this action to Method 23 do not add information collection requirements but make corrections, clarifications and updates to existing testing methodology.

D. Regulatory Flexibility Act (RFA)

I certify that this proposed action will not have a significant economic impact on a substantial number of small entities under the RFA. This action will not impose any requirements on small entities. The proposed revisions to Method 23 do not impose any requirements on regulated entities. Rather the proposed changes improve the quality of the results when required by other rules to use Method 23. Revisions proposed for Method 23 allow contemporary advances in analysis techniques to be used. Further, the proposed changes in Method 23 analysis procedures reduce the impact of this method by bringing it into alignment with other agency methods.

E. Unfunded Mandates Reform Act (UMRA)

This proposed action does not contain any unfunded mandate of $100 million or more as described in UMRA, 2 U.S.C. 1531–1538. The proposed action imposes no enforceable duty on any State, local or tribal governments or the private sector.

F. Executive Order 13132: Federalism

This proposed action does not have federalism implications. It will not have substantial direct effects on the states, on the relationship between the national government and the states, or on the distribution of power and responsibilities among the various levels of government.

G. Executive Order 13175: Consultation and Coordination With Indian Tribal Governments

This proposed action does not have tribal implications, as specified in Executive Order 13175. It will not have substantial direct effects on the Indian Tribal Governments, on the relationship between the national government and the Indian Tribal Governments, or on the distribution of power and responsibilities among Indian Tribal Governments and the various levels of government.

H. Executive Order 13045: Protection of Children From Environmental Health Risks and Safety Risks

The EPA interprets Executive Order 13045 as applying only to those regulatory actions that concern environmental health or safety risks that the EPA has reason to believe may disproportionately affect children, per the definition of ''covered regulatory action'' in section 2–202 of the Executive Order. This proposed action is not subject to Executive Order 13045 because it does not establish or revise a standard that provides protection to children against environmental health and safety risks.

I. Executive Order 13211: Actions That Significantly Affect Energy Supply, Distribution or Use

This proposed action is not subject to Executive Order 13211, because it is not a significant regulatory action under Executive Order 12866.

J. National Technology Transfer and Advancement Act (NTTAA)

This proposed action involves technical standards. The EPA proposes to use ASTM D6911–15 (Guide for Packaging and Shipping Environmental Samples for Laboratory Analysis) and ASTM D4840–99(2018)e1 (Standard Guide for Sample Chain-of-Custody Procedures). These ASTM standards cover best practices that guide sample shipping and tracking from collection through analysis.

These standards were developed and adopted by the American society for Testing and Materials. The standard may be obtained from *https://www.astm.org* or from the ASTM at 100 Barr Harbor Drive, P.O. box C700, West Conshohocken, PA 19428–2959.

K. Executive Order 12898: Federal Actions To Address Environmental Justice in Minority Populations and Low-Income Populations

This proposed action will not have potential disproportionately high and adverse human health or environmental effects on minority, low-income or indigenous populations because it does not establish or revise a standard that provides protection to human health or the environment.

List of Subjects

40 CFR Part 60

Environmental protection, Air pollution control, Hazardous air pollutants, Incorporation by reference, Method 23, Polychlorinated biphenyls, Polychlorinated dibenzofurans, Polychlorinated dibenzo-p-dioxins, Polycyclic aromatic compounds, Test methods.

40 CFR Part 63

Environmental protection, Air pollution control, Method 23, New source performance, Polychlorinated biphenyls, Polychlorinated dibenzofurans, Polychlorinated dibenzo-p-dioxins, Polycyclic aromatic compounds, Test methods.

40 CFR Part 266

Environmental protection, Air pollution control, Hazardous air pollutants, Hazardous waste, Method 23, Polychlorinated biphenyls, Polychlorinated dibenzofurans, Polychlorinated dibenzo-p-dioxins, Polycyclic aromatic compounds, Test methods, Waste management.

Dated: December 17, 2019.

Andrew R. Wheeler,

Administrator.

For the reasons stated in the preamble, the Environmental Protection Agency proposes to amend title 40, chapter I of the Code of Federal Regulations as follows:

PART 60—STANDARDS OF PERFORMANCE FOR NEW STATIONARY SOURCES

■ 1. The authority citation for part 60 continues to read as follows:

Authority: 42 U.S.C. 7401 *et seq.*

■ 2. In § 60.17:

■ a. Redesignate paragraphs (h)(167) through (h)(209) as (h)(168) through (h)(210);

■ b. Add paragraph (h)(167); and

■ c. Revise newly redesignated paragraph (h)(192).

The addition and revision read as follows:

§ 60.17 Incorporations by reference.

* * * * *

(h) * * *

(167) ASTM D4840–99(2018)e1 Standard Guide for Sample Chain-of-Custody Procedures, approved August 2018, IBR approved for appendix A–8: Method 30B, IBR approved for Appendix A–7: Method 23.

* * * * *

(192) ASTM D6911–15 Standard Guide for Packaging and Shipping Environmental Samples for Laboratory Analysis, approved January 15, 2015, IBR approved for appendix A–7: Method 23 and appendix A–8: Method 30B.

* * * * *

■ 3. In § 60.2125, revise paragraphs (g)(2) and (j)(2) to read as follows:

§ 60.2125 How do I conduct the initial and annual performance test?

* * * * *

(g) * * * (2) Quantify isomers meeting identification criteria 2, 3, 4, and 5 in Section 11.4.3.4 of Method 23, regardless of whether the isomers meet identification criteria in Section 11.4.3.4.1 of Method 23. You must quantify the isomers per Section 11.4.3.5 of Method 23. (Note: You may reanalyze the sample aliquot or split to reduce the number of isomers to meet the identification criteria in Section 11.4.3.4 of Method 23.)

* * * * *

(j) * * *

(2) Quantify isomers meeting identification criteria 2, 3, 4, and 5 in Section 11.4.3.4 of Method 23, regardless of whether the isomers meet identification Section 11.4.3.4.1 of Method 23. You must quantify the isomers per Section 11.4.3.5 of Method 23. (Note: You may reanalyze the sample aliquot or split to reduce the number of isomers to meet the identification criteria in Section 11.4.3.4 of Method 23.)

* * * * *

■ 4. In § 60.2690, revise paragraphs (g)(2) and (j)(2) to read as follows:

§ 60.2690 How do I conduct the initial and annual performance test?

* * * * *

(g) * * *

(2) Quantify isomers meeting identification criteria 2, 3, 4, and 5 in Section 11.4.3.4 of Method 23, regardless of whether the isomers meet identification Section 11.4.3.4.1 of Method 23. You must quantify the isomers per Section 11.4.3.5 of Method 23. (Note: You may reanalyze the sample aliquot or split to reduce the number of isomers to meet the identification criteria in Section 11.4.3.4 of Method 23.)

* * * * *

(j) * * *

(2) Quantify isomers meeting identification criteria 2, 3, 4, and 5 in Section 11.4.3.4 of Method 23, regardless of whether the isomers meet identification Section 11.4.3.4.1 of Method 23. You must quantify the isomers per Section 11.4.3.5 of Method 23. (Note: You may reanalyze the sample aliquot or split to reduce the number of isomers to meet the identification criteria in Section 11.4.3.4 of Method 23.); and

* * * * *

■ 5. Revise Method 23 of appendix A–7 to part 60 and to read as follows:

Appendix A–7 to Part 60—Test Methods 19 through 25E

* * * * *

Method 23—Determination of Polychlorinated Dibenzo-p-Dioxins, Polychlorinated Dibenzofurans, Polychlorinated Biphenyls, and Polycyclic Aromatic Hydrocarbons From Stationary Sources

1.0 Scope and Application

1.1 Applicability. This method applies to measuring emissions of polychlorinated dibenzo-p-dioxins and polychlorinated dibenzofurans (PCDDs/PCDFs), polychlorinated biphenyls (PCBs), and/or polycyclic aromatic hydrocarbons (PAHs) in emissions from stationary sources. Using this method, you can measure these analyte groups individually or in any combination using a single sample acquisition. Tables 23–1 through 23–3 of this method list the applicable targets analytes for Method 23.

1.2 Scope. This method describes the sampling and analytical procedures used to measure selected PCDDs, PCDFs, PCBs, and PAHs from stationary source air emissions. However, Method 23 incorporates by reference some of the specifications (*e.g.,* equipment and supplies) and procedures (*e.g.,* sampling and analytical) from other methods in this part that are essential to conducting Method 23. To obtain reliable samples, source sampling teams should be trained and experienced with the following additional EPA test methods: Method 1, Method 2, Method 3, Method 4, and Method 5 of appendices A–1, A–2, and A–3 to 40 CFR part 60. Laboratory analysis teams should be trained and experienced with Method 1668C found at: *https://www.epa.gov/sites/production/files/2015–09/documents/method_1668c_2010.pdf* and Method 1613B of 40 CFR part 136 appendix A.

1.3 The high-resolution gas chromatography and high-resolution mass spectrometry (HRGC/HRMS) portions of this method are for use by laboratory analysts experienced with HRGC/HRMS analysis of PCDDs, PCDFs, PCBs, and PAHs or under the close supervision of such qualified persons. Each source testing team, including the sampling and laboratory organization(s) that use this method, must demonstrate the ability to generate acceptable results that meet the performance criteria in Section 13 of this method.

1.4 This method is ''performance-based'' and includes acceptability criteria for assessing sampling and analytical procedures. Users may modify the method to overcome interferences or to substitute superior materials and equipment, provided that they meet all performance criteria in this method. Section 13 of this method presents requirements for method performance.

2.0 Summary of Method

This method identifies and determines the concentration of specific PCDD, PCDF, PCBs, and PAHs compounds. Gaseous and particulate bound target pollutants are withdrawn from the gas stream isokinetically and collected in the sample probe, on a glass fiber or quartz filter, and on a packed column of adsorbent material. This method is not intended to differentiate between target compounds in particle or vapor fractions. The target compounds are extracted from the combined sample collection media. Portions of the extract are chromatographically fractionated to remove interferences, separated into individual compounds or simple mixtures by HRGC, and measured with HRMS. This method uses isotopically labeled standards to improve method accuracy and precision.

3.0 Definitions

3.1 Alternate Recovery Standards. A group of isotopically labeled compounds that is not otherwise designated in this method for quality control purposes. Use alternative recovery standards to assess the recovery of a compound class relative to a step in the sampling and analysis procedure that is not already assessed as a mandatory part of this method.

3.2 Batch Blank Sample. A laboratory blank sample composed of clean filter and XAD–2 media processed and analyzed using the same procedures as a field sample.

3.3 Benzo[*a*]pyrene Toxic Equivalent Factor (B[*a*]P–TEF). One of several schemes that express the toxicity for PAH compounds in terms of the most toxic form of PAH, benzo[*a*]pyrene, as specified in applicable regulations, permits, or other requirements.

3.4 Continuing Calibration Verification Standard (CCV). The mid-point calibration standard used to verify calibration. Prepare CCV standards from a second source, when possible.

3.5 Congener. An individual compound with a common structure (dioxin, furan, or biphenyl), only differing by the number of chlorine atoms attached to the structure.

3.6 Estimated Detection Limit (EDL). The minimum qualitatively recognizable signal above background for a target compound. The EDL is a

mathematically-derived detection limit (MDL) specific to each sample analysis based on the noise signal measured near the mass of a target compound or target isomer group. Being sample specific, the EDL is affected by sample size, dilution, etc.

3.7 Estimated Possible Concentration (EPC). Report the results as EPC when the ion abundance ratio for a target analyte is outside the performance criteria. Calculate the EPC separately for each quantitation ion, if present, and report the lower value as the EPC.

3.8 Homolog. A compound belonging to a series of compounds with the same general molecular formula, differing from each other by the number of repeating units.

3.9 Isomer. An individual compound with a common structure (dioxin, furan, or biphenyl), only differing by the position of chlorine atoms attached to the structure.

3.10 Polychlorinated Biphenyl (PCB) Isomers. Any or all 209 chlorinated biphenyl congeners and their isomers. Table 23–3 of this method lists the primary target compounds and appendix A to this method provides the full list of 209 PCB congeners and isomers.

3.10.1 Monochlorobiphenyl (MoCB). Any or all three monochlorinated biphenyl isomers.

3.10.2 Dichlorobiphenyl (DiCB). Any or all 12 dichlorinated biphenyl isomers.

3.10.3 Trichlorobiphenyl (TrCB). Any or all 24 trichlorinated biphenyl isomers.

3.10.4 Tetrachlorobiphenyl (TeCB). Any or all 42 tetrachlorinated biphenyl isomers.

3.10.5 Pentachlorobiphenyl (PeCB). Any or all 46 pentachlorinated biphenyl isomers.

3.10.6 Hexachlorobiphenyl (HxCB). Any or all 42 hexachlorinated biphenyl isomers.

3.10.7 Heptachlorobiphenyl (HpCB). Any or all 24 heptachlorinated biphenyl isomers.

3.10.8 Octachlorobiphenyl (OcCB). Any or all 12 octachlorinated biphenyl isomers.

3.10.9 Nonachlorobiphenyl (NoCB). Any or all three nonachlorinated biphenyl isomers.

3.10.10 Decachlorobiphenyl (DeCB). Biphenyl fully chlorinated with ten chlorine atom substituents replacing hydrogen in the parent compound.

3.11 Polychlorinated dibenzo-p-dioxin (PCDD) isomers. Any or all 75 chlorinated dibenzo-p-dioxin isomers. There are 11 required target PCDD analytes listed in Table 23–1 of this method. This method does not measure mono- through tri-PCDDs and includes non-2,3,7,8 substituted congeners in the total homolog categories.

3.11.1 Tetrachlorodibenzo-p-dioxin (TeCDD*).* Any or all 22 tetrachlorinated dibenzo-p-dioxin isomers.

3.11.2 Pentachlorodibenzo-p-dioxin (PeCDD). Any or all 14 pentachlorinated dibenzo-p-dioxin isomers.

3.11.3 Hexachlorodibenzo-p-dioxin (HxCDD). Any or all 10 hexachlorinated dibenzo-p-dioxin isomers.

3.11.4 Heptachlorodibenzo-p-dioxin (HpCDD). Any or all two heptachlorinated dibenzo-p-dioxin isomers.

3.11.5 Octachlorodibenzo-p-dioxin (OCDD). Dibenzodioxin fully chlorinated with eight chlorine atom substituents replacing hydrogen in the parent compound.

3.12 Polychlorinated dibenzofuran (PCDF) isomers. Any or all chlorinated dibenzofuran isomers. There are 14 required target PCDF analytes listed in Table 23–1 of this method. This method does not measure mono- through tri-PCDFs and includes non-2,3,7,8 substituted congeners in the total homolog categories.

3.12.1 Tetrachlorodibenzofuran (TeCDF). Any or all 38 tetrachlorinated dibenzofuran isomers.

3.12.2 Pentachlorodibenzofuran (PeCDF). Any or all 28 pentachlorinated dibenzofuran isomers.

3.12.3 Hexachlorodibenzofuran (HxCDF). Any or all 16 hexachlorinated dibenzofuran isomers.

3.12.4 Heptachlordibenzofuran (HpCDF). Any or all four heptachlorinated dibenzofuran isomers.

3.12.5 Octachlorodibenzofuran (OCDF). Dibenzofuran fully chlorinated with eight chlorine atom substituents replacing hydrogen in the parent compound.

3.13 Polychlorinated diphenyl ethers (PCDEs). Any or all chlorinated substituted diphenyl ethers.

3.13.1 Hexachlorodiphenyl ether (HxCDPE). Any or all 42 hexachlorinated diphenyl ether isomers.

3.13.2 Heptachlorodiphenyl ether (HpCDPE). Any or all 24 heptachlorinated diphenyl ether isomers.

3.13.3 Octachlorodiphenyl ether (OCDPE). Any or all 12 octachlorinated diphenyl ether isomers.

3.13.4 Nonachlorodiphenyl ether (NCDPE). Any or all three nonachlorinated diphenyl ether isomers.

3.13.5 Decachlorodiphenyl ether (DCDPE).

3.14 Polycyclic Aromatic Hydrocarbons (PAHs). Any or all aromatic compounds with two or more fused six-member rings. Table 23–2 of this method lists the target PAH compounds for this method. You may add and analyze additional PAH compounds by adding the appropriate ^{13}C isotopically labeled compound to the pre-extraction spike mixture and by following the other requirements for target PAH compounds in this method.

3.15 Pre-analysis Standard(s). A group of isotopically labeled compounds added at a known amount immediately prior to analysis and used to correct instrument response, injection errors, instrument drift and to determine the recovery of the pre-extraction isotopically labeled spike compounds. Add pre-analysis standards to every sample (including blank, quality control sample, and calibration solutions) at a known amount.

3.16 Pre-extraction Filter Recovery Standard(s). A group of isotopically labeled compounds added at a known amount to the filter used to indicate the extraction efficiency of the filter media. Add pre-extraction filter recovery standard(s) to the filter samples just prior extraction.

3.17 Pre-extraction Standard(s). A group of isotopically labeled compounds added in a known amount to the XAD–2 adsorbent sample immediately before extraction to correct the quantity of the native target compounds present in the sample for extraction, cleanup, and concentration recovery. These isotopically labeled compounds constitute a matrix spike in each sample.

3.18 Pre-sampling Adsorbent Standard(s). A group of isotopically labeled compounds added in a known amount to the XAD–2 adsorbent prior to sampling used to indicate the sample collection and recovery efficiency of the method.

3.19 Pre-transport Standard(s). Spiking compound(s) from the list of alternative recovery standards that can be added by the laboratory to the sample shipping containers used to transport field equipment rinse and recovery samples. The measured concentration of the pre-transport recovery standard provides a quality check on potential probe rinse sample spillage or mishandling after sample collection and during shipping.

3.20 Relative Response Factor (RRF). The response of the mass spectrometer to a known amount of an analyte relative to a known amount of an isotopically labeled standard.

3.21 2,3,7,8-Tetrachlorodibenzo-p-dioxin Toxic Equivalent Factor(s) (2,3,7,8-TeCDD–TEF). A procedure that expresses the toxicity of PCDDs, PCDFs,

and PCBs in terms of the most toxic dioxin, as specified in applicable regulations, permits, or other requirements.

4.0 Interferences

4.1 PCBs and PCDEs have similar molecular weight and chromatographic properties to PCDDs and PCDFs. PCBs produce an interfering mass-to-charge ratio (m/z) when losing chlorine (Cl_2) or Cl_4 upon fragmenting during ionization processes. PCDEs also produce interfering m/z values when losing Cl_2 in the PCDF homolog group with two fewer chlorine atoms (*i.e.,* an octachlorinated PCDE can interfere with a hexachlorinated PCDF). The latter interferences are potentially detected by monitoring an m/z corresponding to the potentially interfering PCDE; however, the fragmentation patterns of all PCDEs may not be known, complicating any attempt to quantify the extent of ether interference.

4.2 Very high amounts of other organic compounds in the matrix may interfere with the analysis. This method provides examples of column-chromatographic cleanup as procedures to reduce, but not necessarily eliminate, matrix effects due to high concentrations of organic compounds (International Agency for Research on Cancer 1991).

4.3 Target compound contaminants or related organics in solvents, reagents, glassware, isotopically labeled spiking standards, and other sample processing hardware are potential method interferences. Routinely evaluate all these materials to demonstrate that they are either free from interferences under the conditions of the analysis, or that the interference does not compromise the quality of the analysis results. Evaluate chemical interference through the preparation and analysis of batch blank samples. Use high purity reagents, solvents, and standards to minimize interference problems in sample analysis.

4.4 PAHs are subject to degradation when exposed to ultraviolet light. Take precautions to shield samples from sunlight or fluorescent light sources during sample collection, recovery, extraction, cleanup, and concentration.

5.0 Safety

Note: Develop a strict laboratory safety program for the handling of PCDDs, PCDFs, PCBs, and/or PAHs.

5.1 Compounds in the PCDD and PCDF classes such as 2,3,7,8-TeCDD are aneugenic, carcinogenic, and teratogenic in laboratory animal studies. Other PCDDs and PCDFs containing chlorine atoms in positions 2,3,7,8 have toxicities comparable to that of 2,3,7,8-TeCDD.

5.2 PCBs are classified as known or suspected human or mammalian carcinogens. Be aware of the potential for inhalation and ingestion exposure to laboratory analysts.

5.3 This method recommends that the laboratory purchase dilute standard solutions of the analytes required for this method. However, if preparing primary solutions, use a hood or glove box. Laboratory personnel handling primary solutions should wear personal protective equipment including a toxic gas respirator mask fitted with charcoal filters approved by the National Institute for Occupational Safety and Health (NIOSH)/Mine Safety Health Administration (MSHA) to prevent the inhalation of airborne particulates if not working in an approved hood or glove box.

5.4 The toxicity or carcinogenicity of other reagents or chemicals used in this method is not precisely defined. However, treat each chemical as a potential health hazard and minimize exposure to these chemicals. The laboratory is responsible for maintaining a current awareness file of Occupational Safety and Health Administration (OSHA) regulations regarding the safe handling of the chemicals specified in this method. Ensure that a reference file or list of internet sites that contain safety data sheets (SDS) is available to all personnel involved in the sampling and chemical analysis of samples known or suspected to contain PCDDs, PCDFs, PCBs, and PAHs.

6.0 Equipment and Supplies

Note: Brand names, suppliers, and part numbers are for illustration purposes only and no endorsement is implied. Apparatus and materials other than those specified in this method may achieve equivalent performance. Meeting the performance requirements of this method is the responsibility of the source testing team and laboratory team.

6.1 Sampling Apparatus. Figure 23–1 of this method shows a schematic of the Method 23 sampling train. Do not use sealing greases or brominated flame retardant-coated tape in assembling the train. The train is identical to that described in section 6.1.1 of Method 5 of appendix A–3 to 40 CFR part 60 with the following additions:

6.1.1 Nozzle. The nozzle must be made of quartz or borosilicate glass or titanium. Stainless steel nozzles should not be used.

6.1.2 Probe Liner. Use either polytetrafluoroethylene (PTFE), borosilicate, or quartz glass probe liners with a heating system capable of maintaining a probe gas temperature of 120 ± 14 °C (248 ± 25 °F) during sampling, or such other temperature as specified by an applicable subpart of the standards or as approved by the Administrator. Use a PTFE ferrule or single-use PTFE coated O-ring to achieve the seal at the nozzle end of the probe for stack temperatures up to about 300 °C (572 °F). Use a quartz glass liner and integrated quartz nozzle for stack temperatures between 300 and 1,200 °C (572 and 2,192 °F).

6.1.3 Filter Holder. Use a filter holder of borosilicate glass with a PTFE frit or PTFE-coated wire filter support. The holder design should provide a positive seal against leakage from the outside or around the filter. The holder should be durable, easy to load, leak-free in normal applications, and positioned immediately following the probe and cyclone bypass (or cyclone, if used) with the active side of the filter perpendicular to the source of the flow.

6.1.4 Filter Heating System. Use any heating system capable of monitoring and maintaining the temperature around the filter to ensure that the sample gas temperature exiting the filter is 120 ± 14 °C (248 ± 25 °F) during sampling or such other temperature as specified by an applicable subpart of the standards or approved by the Administrator for a particular application.

6.1.5 Filter Temperature Sensor. Install a temperature sensor capable of measuring temperature to within ± 3 °C (5.4 °F) so that the sensing tip protrudes at least 1.3 centimeters (cm) (1–2 in.) into the sample gas exiting the filter. Encase the sensing tip of the sensor in glass or PTFE if needed.

6.1.6 Sample Transfer Line. The sample transfer line transports gaseous emissions from the heated filter holder to the condenser and must be heat traced and constructed of glass or PTFE with connecting fittings that form leak-free, vacuum-tight connections without using sealing greases or tapes. Keep the sample transfer lines as short as possible and maintain the lines at a temperature of 120 °C ± 14 °C (248 °F ± 25 °F) using active heating when necessary. Orient the sample transfer lines with the downstream end lower than the upstream end so that any condensate will flow away from the filter and into the condenser.

6.1.7 Condenser. Glass, water-jacketed, coil-type with compatible fittings. Orient the condenser to cause moisture to flow down to the adsorbent module to facilitate condensate drainage. Figure 23–2 of this method shows a schematic diagram of the condenser.

6.1.8 Water Circulating Bath. Use a bath pump circulating system capable of providing chilled water flow to the condenser and adsorbent module water jackets. Typically, a submersible pump is placed in the impinger ice water bath to circulate the ice water contained in the bath. Verify the function of this system by measuring the gas temperature at the entrance to the adsorbent module. Maintain this temperature at < 20 °C (68 °F).

6.1.9 Adsorbent Module. Use a water-jacketed glass container to hold up to 40 grams (g) of the solid adsorbent. Figure 23–2 of this method shows a schematic diagram of the adsorbent module. Other physical configurations of the adsorbent resin module/condenser assembly are acceptable if the configuration contains the requisite amount of solid adsorbent and maintains the minimum length-to-width adsorbent bed ratio of two-to-one. Orient the adsorbent module vertically to facilitate condensate drainage. The connecting fittings must form leak-free, vacuum-tight seals. Include a coarse glass frit in the adsorbent module to retain the adsorbent.

6.1.10 Impingers. Use five impingers connected in series with leak-free ground glass fittings or any similar leak-free noncontaminating fittings. The first impinger must be a short-stem stem (water-dropout) design or equivalent. The second, fourth, and fifth impingers must be of the Greenburg-Smith design, modified by replacing the tip with a 1.3 cm (1–2 in.) inside diameter (ID) glass tube extending to approximately 1.3 cm (1–2 in.) from the bottom of the flask. The third impinger must be of the Greenburg-Smith design with the standard tip. The second and third impingers must contain known quantities of water, and the fifth impinger must contain a known weight of silica gel or equivalent desiccant. Alternatively, you may omit the first impinger if you do not expect excess moisture in the sample gas.

6.2 Sample Recovery Equipment.

6.2.1 Fitting Caps. Use leak-free ground glass fittings or any similar leak-free non-contaminating fitting to cap the sections of the sampling train exposed to the sample gas. Alternatively, use PTFE tape or contaminant-free aluminum foil for this purpose (see Section 6.2.6 of this method).

6.2.2 Wash Bottles. Use PTFE bottles.

6.2.3 Probe-Liner, Probe-Nozzle, and Filter-Holder Brushes. Use inert bristle brushes with precleaned stainless steel or PTFE handles. Extensions of the probe brush must be made of stainless steel or PTFE and be at least as long as the probe. Use brushes that are properly sized and shaped to remove accumulated material from the nozzle and probe liner if used.

6.2.4 Filter Storage Container. Use a sealed filter holder, wide-mouth amber glass jar with PTFE-lined cap, or glass petri dish sealed with PTFE tape. Purchase precleaned amber glass jars and petri dishes or clean according to the glassware cleaning procedures listed in Section 8.1.1.1 of this method.

6.2.5 Field Balance. Use a weighing device capable of measurements to an accuracy of 0.5g.

6.2.6 Aluminum Foil. Use heavy duty aluminum foil cleaned by rinsing three times with hexane or toluene and stored in a pre-cleaned glass petri dish or glass jar. Do not use aluminum foil to wrap or contact filter samples due to the possibility of reaction between the sample and the aluminum.

6.2.7 Adsorbent Storage Containers. Use an air-tight container to store silica gel.

6.2.8 Glass Sample Storage Containers. Recover samples in amber glass bottles, 500- or 1000-milliliters (mL) with leak-free PTFE-lined caps. Either purchase precleaned bottles or clean containers according to glassware cleaning procedures listed in Section 8.1.1.1 of this method.

6.3 Sample Extraction Equipment.

6.3.1 Sample Containers. Use 125- and 250-mL amber glass bottles with PTFE-lined caps.

6.3.2 Test Tubes. Use glass test tubes or small (*e.g.,* 5 to 10 mL) amber vials.

6.3.3 Soxhlet/Dean-Stark Extraction Apparatus.

6.3.3.1 Soxhlet Apparatus. Use 200-mL capacity capable of holding 43 × 123-millimeter (mm) extraction thimbles, with receiving flask (typically round-bottom).

6.3.3.2 Moisture Trap. Use Dean-Stark or Barret with fluoropolymer stopcock trap to fit between the Soxhlet extractor body and the condenser as shown in Figure 23–3 of this method. Note: Dean-Stark or Barret traps are used to remove water with extraction solvents that are less dense and insoluble in water.

6.3.3.3 Extraction Thimble. Use quartz, glass, or glass fiber thimble, typically 43 × 123 mm to fit Soxhlet apparatus.

6.3.3.4 Heating Mantle. Use a hemispherical shaped heating mantle to fit round-bottom flask.

6.3.4 Kuderna-Danish Concentrator. Use an apparatus consisting of a three-ball Snyder column, a flask with leak-free joint to accept the three-ball Snyder column at the top, a leak-free joint to receive a graduated concentration tube at the bottom and a heating mantle.

6.3.5 Nitrogen Evaporative Concentrator. Use a nitrogen evaporative concentrator equipped with a water bath with the temperature controlled in the range of 30 to 60 °C (86 to 140 °F) (N-Evap Organomation Associates, Inc., South Berlin, MA, or equivalent).

6.3.6 Separatory Funnels. Use glass or PTFE 2-liter separatory funnels.

6.4 Glass Liquid Chromatography Columns.

6.4.1 Pasteur Pipettes. Use disposable pipettes, or glass serological pipettes typically 150 mm long × 6 mm ID.

6.4.2 Chromatography Columns. 200 to 300 mm long × 20 mm ID with 250-mL reservoir.

6.5 Analytical Equipment.

6.5.1 Gas Chromatograph. Use a gas chromatograph consisting of the following components:

6.5.1.1 Oven. Use an oven capable of maintaining the separation column at the proper operating temperature ± 1.0 °C (1.8 °F) and performing programmed increases in temperature at rates of at least 20 °C/min with isothermal hold.

6.5.1.2 Temperature Monitor. Use a temperature monitor to measure column oven temperature to ± 1.0 °C (1.8 °F).

6.5.1.3 Flow System. Use an electronic pressure control or equivalent gas metering system to control carrier gas flow or pressure.

6.5.1.4 Use a split/splitless injection port in the splitless mode or on-column injection port for the capillary column.

6.5.2 Capillary Gas Chromatography Columns. Use different columns for the analysis of the different target compound classes in this method, if needed. Perform the resolution checks in Sections 10.2.3.4 and 10.2.3.5 of this method to document the required resolution. Compound separation must meet the resolution specifications in Section 10.2.3.4 of this method and the identification specifications found in Section 11.4.3.4 of this method.

6.5.2.1 Recommended column systems for measuring PCDDs/PCDFs should be capable of achieving separation of the 17 PCDD/PCDF target compounds from the nearest eluting congener with no more than 10 percent peak overlap. The system must meet the performance specifications for compound separation and quantitation in calibration, performance check, and isotopically labeled standards added to field samples. Use a variety of bonded-phase capillary gas chromatography columns to meet these requirements, if needed.

Note: Fishman, et al. (see Section 16.3 of this method) demonstrated that all TEF isomers can be fully differentiated from closely eluting isomers using either of two sets of non-polar and polar stationary phase combinations. One set consisted of 5-percent phenyl methylpolysiloxane (DB–5, HP–5MS, Rtx–5MS, Equity–5) and 50-percent cyanopropylmethyl, 50-percent phenylmethylsiloxane (DB–225, SP 2331) GC columns and the other set consisted of 5-percent phenyl, 94-percent methyl, 1-percent vinyl silicone bonded-phase (DB–5MS, ZB–5MS, VF–5MS, CP–Sil 8 CB LowBleed/MS) with 50-percent cyanopropylmethyl, 50-percent phenylmethylsiloxane (SP–2331).

6.5.2.2 Use column systems for measuring PAHs that can achieve separation of anthracene and phenanthrene at m/z 178 such that the valley between the peaks does not exceed 50 percent of the taller of the two peaks, and benzo[*b*]fluoranthene and benzo[*k*]fluoranthene such that the valley between the peaks is less than 60 percent of the height of the taller peak. These requirements are achievable using a 30-m narrow bore (0.25 mm ID) 5-percent phenyl polysilphenylene-siloxane (BPX5 or equivalent) bonded-phase, fused-silica capillary column.

6.5.2.3 PCB Columns.

6.5.2.3.1 Use column systems for measuring PCBs that can achieve unique resolution and identification of the toxics for determination of a TEQ_{PCB} using TEFs (American Society of Mechanical Engineers 1984). Isomers may be unresolved if they have the same TEF and response factor and if these unresolved isomers are uniquely resolved from all other congeners. These requirements are achievable using several 30-meter (m) narrow bore (0.25 mm ID) columns including 8-percent phenyl polycarborane-siloxane (HT8), DB–XLB, and poly (50-percent n-octyl/50-percent methyl siloxane) (SPB–Octyl).

6.5.2.3.2 If using an SPB-Octyl column for PCB analysis, the column should also uniquely resolve isomers 34 from 23 and 187 from 182. Resolution for these PCBs is shown by the valley between the peaks not exceeding 40 percent of the taller of the two peaks that result when these congeners are analyzed in the same calibration sample.

6.5.3 Mass Spectrometer. Use 28 to 70 electron volt impact ionization capable of repetitive selective monitoring of 12 exact m/z values with a mass resolution defined in section 10.2.1 of this method for fragments in the range of 300 to 350 m/z. The deviation between each monitored mass lock m/z and the monoisotopic m/z (Tables 23–4, 23–5, and 23–6 of this method for PCDDs/PCDFs, PAHs, and PCBs, respectively) must be less than 5 parts per million.

6.5.4 Mass Spectrometer Data System. Use a data system compatible with the mass spectrometer and capable of sequencing and monitoring multiple groups of selected ions.

6.5.5 Analytical Balance. Use an analytical balance to measure within 0.1 milligram (mg).

7.0 Reagents, Media, and Standards

Note: The quality checks described in this section are recommended but not required. They are provided to help ensure data will meet the required performance specifications in Section 13 of this method.

7.1 Filter. Glass fiber filters, without organic binder, exhibiting at least 99.95 percent efficiency (<0.05 percent penetration) on 0.3-micron dioctyl phthalate smoke particles.

7.1.1 Extraction. Conduct a quality control check on the filter lot prior to the field test to demonstrate that filters are free from contamination or interference. Perform Soxhlet extraction on a minimum of three filters with toluene for 16 hours. After extraction, allow the Soxhlet apparatus to cool. Remove the filters and remove the solvent from the filters under clean conditions (*e.g.,* a clean nitrogen stream).

7.1.2 Analysis. Analyze the individual extracts of a minimum of three filters from each lot used for sampling according to the procedures in Section 11 of this method. The blank filter check analysis must meet the performance requirements in Section 13.14 of this method.

7.2 Adsorbent Resin. Amberlite® XAD–2 resin. All adsorbent resin must meet the cleanliness criteria in Section 13.14 of this method for all target compounds on the analysis list (*i.e.,* native PCDD/PCDF, PCB, and/or PAH) following the same extraction, concentration, cleanup, and analysis steps as field samples. This method recommends using the procedures provided in appendix B to this method to clean the resin before use, if needed. However, this method allows alternative cleanup procedures that use automated extraction equipment if the adsorbent meets the required performance criteria in Section 13.14 of this method.

7.2.1 Conduct a quality control check on the cleaned adsorbent using HRGC/HRMS techniques following procedures in Section 11 of this method. The cleaned adsorbent must meet the criteria in Section 13.14 of this method. A batch blank conducted on the filter and adsorbent lot combination used for a test can serve this purpose.

7.2.2 Storage. Store adsorbent in its original purchase container, a clean wide-mouth amber glass container with a PTFE-lined cap, or in glass adsorbent modules tightly sealed with glass caps.

7.3 Glass Wool. Clean the glass wool to meet the specifications in Section 13.14 of this method. Using sequential immersion in three clean aliquots of toluene, drying in a 110 °C (230 °F) oven, and storing in a toluene-rinsed glass jar with a PTFE-lined screw cap can meet these requirements.

7.4 Water. Use deionized or distilled water meeting requirements in Section 13.14 of this method and store in its original container or in a toluene-rinsed glass container with a PTFE-lined screw cap.

7.5 Silica Gel. Indicating type, 6–16 mesh. If previously used, dry at 175 °C (347 °F) for two hours. Use new silica gel as received. As an alternative, use other types of desiccants (equivalent or better), subject to the approval of the Administrator.

7.6 Methylene Chloride. Pesticide grade or better.

7.7 Sample Recovery Reagents.

7.7.1 Acetone. Pesticide grade or better.

7.7.2 Toluene. Pesticide grade or better.

7.8 Sample Extraction and Cleanup.

7.8.1 Potassium Hydroxide. American Chemical Society (ACS) grade, 2 percent (weight/volume) in water.

7.8.2 Sodium Sulfate. Granulated or powdered, reagent grade. Use as received, include in batch blank evaluation prior to use, or purify as necessary prior to use by rinsing with methylene chloride or toluene and oven drying. The batch blank must meet the requirements in Section 13.14 of this method. Store the cleaned material in a glass container with a PTFE-lined screw cap.

7.8.3 Sulfuric Acid. Reagent grade.

7.8.4 Sodium Hydroxide. 1.0 N. Weigh 40 g of sodium hydroxide into a 1-liter volumetric flask. Dilute to 1 liter with water.

7.8.5 Hexane. Pesticide grade or better.

7.8.6 Methanol. Pesticide grade or better.

7.8.7 Toluene. Pesticide grade or better.

7.8.8 High-Boiling Alkanes Used as Keeper Solvents (*e.g.,* tetradecane, nonane, decane). Pesticide grade. Note: Lower homologous series alkanes (nonane or decane) are necessary for higher volatility targets such as MoCBs and naphthalene to maintain retention during concentration procedures. However, do not take samples to

dryness when using these lower alkane homologs.

7.8.9 Liquid Column Chromatography Packing Materials. Use the following column chromatography packing materials, as needed, to prepare sample extracts and remove interfering compounds. Commercially prepacked cleaning columns may be available for this purpose. All procedures for preparing column chromatography packing materials are recommendations shown to meet the performance specifications required for the recovery of labeled compounds described in Section 13 of this method.

7.8.9.1 Alumina. Use either acidic or basic alumina in the cleanup of sample extracts. Use the same type of alumina for all samples in an analytical sequence, including those used to demonstrate batch blank performance.

7.8.9.1.1 Acidic Alumina (Sigma-Aldrich® 199966 or equivalent). Brockmann activity grade 1, 100–200 mesh. Prior to use, activate the alumina by heating for 12 hours at 130 °C (266 °F). Store in a desiccator. You may use pre-activated alumina purchased from a supplier as received.

7.8.9.1.2 Basic Alumina (Sigma-Aldrich® 19943 or equivalent). Brockmann activity grade 1. Activate by heating to 600 °C (1,112 °F) for a minimum of 24 hours. Do not heat to over 700 °C (1,292 °F) because this can lead to reduced capacity for retaining the analytes. Store at 130 °C (266 °F) in a covered flask. Use within five days of baking. Use prepacked alumina columns immediately after opening the vacuum sealed pouch or container.

7.8.9.2 Florisil®. Activated, 60–100 mesh recommended. Heat previously activated Florisil® in a glass container loosely covered with aluminum foil in an oven at 130 to 150 °C (266 to 302 °F) for a minimum of 24 hours. Upon cooling, store activated Florisil® silica prior to use in a desiccator.

7.8.9.3 Silica Gel. Use either activated, acidic or basic silica gel in the cleanup of sample extracts. Use the same type of silica gel for all samples in an analytical sequence, including those used to demonstrate batch blank performance.

7.8.9.3.1 Activated Silica Gel. Supelco® 1–3651, Bio-Sil® A, 100–200 mesh (or equivalent). Prior to use, rinse with methylene chloride and activate the silica gel by heating for at least 1 hour at 180 °C (356 °F). After cooling, rinse the silica gel sequentially with methanol and toluene. Heat the rinsed silica gel at 50 °C (122 °F) for 10 minutes, then increase the temperature gradually to 180 °C (356 °F) over 25 minutes and maintain the gel at this temperature for 90 minutes. Cool in a desiccator to room temperature and store in a glass container with a PTFE-lined screw cap.

7.8.9.3.2 Acidic Silica Gel (30 percent weight/weight). Combine 100 g of activated silica gel with 44 g of concentrated sulfuric acid in a clean screw-capped glass container and agitate thoroughly. Disperse the solids with a stirring rod until obtaining a uniform mixture. Store the mixture in a glass container with a PTFE-lined screw cap.

7.8.9.3.3 Basic Silica Gel. Combine 30 g of 1 N sodium hydroxide with 100 g of activated silica gel in a clean screw-capped glass container and agitate thoroughly. Disperse solids with a stirring rod until obtaining a uniform mixture. Store the mixture in glass container with a PTFE-lined screw cap.

7.8.9.4 Carbon/Celite® 545 (or equivalent solid support). Use a carbon-based column cleanup material (*e.g.,* one of the many Carbopack® B or C) to remove impurities from the samples prior to analysis. Thoroughly mix 9.0 g Carbopack® C and 41.0 g Celite® 545 to produce an 18-percent weight/weight mixture. Activate the mixture at 130 °C (266 °F) for a minimum of 6 hours. Store in a desiccator.

7.8.10 Nitrogen. 99.999 percent (ultra-high) purity.

7.9 Sample Analysis.

7.9.1 Helium. 99.999 percent (ultra-high) purity.

7.9.2 Spiking Standards. Prepare spiking standards quantitatively at a convenient concentration (*e.g.,*10 nanograms (ng)/mL) or use commercial standards if available, to enable accurate spiking of a labeled standard at various stages of the sample preparation. You may adjust the spiking concentrations from those recommended in Tables 23–7, 23–8 and 23–9 of this method to accommodate the concentration of target compounds anticipated in samples if the performance criteria in Section 13 of this method are met.

7.9.3 Pre-Sampling Recovery Standard Solution. Prepare stock standard solutions in nonane to enable spiking of the isotopically labelled compounds for target compound classes in Tables 23–7, 23–8, and 23–9 of this method at the mass shown under the heading ''Pre-sampling Adsorbent Standards.''

7.9.4 Pre-extraction Filter Recovery Spike Standard Solution. Prepare stock standard solutions in nonane to enable spiking of the isotopically labelled compounds for target compound classes in Tables 23–7, 23–8, and 23–9 of this method at the mass shown under the heading ''Pre-extraction Filter Recovery Spike Standards.''

7.9.5 Pre-extraction Recovery Standard Solution. Prepare stock standard solutions in nonane to enable spiking of the isotopically labelled compounds for target compound classes in Tables 23–7, 23–8, and 23–9 of this method at the mass shown under the heading ''Pre-extraction Standards.''

7.9.6 Pre-analysis Standard Solution. Prepare stock standard solutions in nonane to enable spiking of the isotopically labelled compounds for target compound classes in Tables 23–7, 23–8, and 23–9 of this method at the mass shown under the heading ''Pre-analysis Standards.''

8.0 Sample Collection, Preservation and Storage

8.1 Sampling. This method involves collection and recovery of trace concentrations of semivolatile organic compounds. Therefore, train field sampling and recovery staff in the best practices for handling and using organic solvents in field environments to recover and protect samples from contamination.

8.1.1 Pretest Preparation.

8.1.1.1 Cleaning Glassware. Clean glassware thoroughly before using. This section provides a recommended procedure, but any protocol that consistently results in contamination-free glassware meeting the batch blank criteria in Section 13.2 of this method is acceptable.

8.1.1.1.1 Soak all glassware in hot soapy water (Alconox® or equivalent).

8.1.1.1.2 Rinse with hot tap water.

8.1.1.1.3 Rinse with deionized/distilled water.

8.1.1.1.4 Rinse with methanol.

8.1.1.1.5 Rinse with toluene.

8.1.1.1.6 Baking glassware at 300 °C (572 °F) for a minimum of 2 hours may be necessary to remove contaminants or interferents from particularly dirty samples. Cool glassware after baking.

Note: Repeated baking of glassware may cause active sites on the glass surface that may irreversibly absorb target compounds.

8.1.1.1.7 Cover glassware openings with clean glass fitting caps or cleaned aluminum foil (see Section 6.2.6 of this method).

8.1.1.1.8 Rinse glassware immediately before use with acetone and toluene.

Note: To prepare heavily soiled glassware, remove surface residuals from the glassware by soaking in hot soapy water, rinsing with hot water, then soaking with a non-chromic acid oxidizing cleaning reagent in a strong acid (*e.g.,* NOCHROMIX® prepared according to manufacturer's directions). After the acid soak, rinse with hot water and repeat the

cleaning procedures in Section 8.1.1.1 of this method.

8.1.1.2 Adsorbent Module. Load the modules in a clean area to avoid contamination. Spike modules before the sampling event, but do not spike the modules in the field. Fill a module with 20 to 40 g of XAD–2. Add the pre-sampling standard spike for each of the compound classes to be measured to the top quarter of the adsorbent bed. Add sufficient spike (picograms (pg)/module) to result in the final theoretical concentrations specified in Tables 23–7, 23–8, and 23–9 of this method for PCDDs/PCDFs, PAHs, and PCBs, respectively. For samples with known or anticipated target compound concentration significantly higher or lower than the specified amount in these tables, add a pre-sampling spike amount appropriate to the expected native compound concentration, but no less than 10 times the EDL. Follow the XAD–2 with cleaned glass wool and tightly cap both ends of the module. For analysis that include PAH, use spiked modules within 14 days of preparation. See Table 23–10 of this method for storage conditions.

8.1.1.3 Sampling Train. Figure 23–1 of this method shows the complete sampling train. Follow the best practices by maintaining all sampling train components according to the procedure described in APTD–0576 Maintenance, Calibration, and Operation of Isokinetic Source-sampling Equipment (U.S. EPA 1972).

8.1.1.4 Silica Gel. Weigh several 200 to 300 g portions of silica gel in an air-tight container to the nearest 0.5 g. Record the total weight of the silica gel plus container on the outside of each container. As an alternative, directly weigh the silica gel in its impinger or sampling holder just prior to sampling.

8.1.1.5 Filter. Check each filter against light for irregularities and flaws or pinhole leaks. Pack the filters flat in a clean glass container. Do not mark filters with ink or any other contaminating substance.

8.1.2 Preliminary Determinations. Use the procedures specified in Section 8.2 of Method 5 of appendix A–3 to 40 CFR part 60.

8.1.2.1 Sample Volume. Unless otherwise specified in an applicable rule, permit, or other requirement, sample for a minimum of 2 minutes at each traverse point. This method recommends sampling a minimum of 2.5 dry standard cubic meters (dscm).

8.1.2.2 For continuously operating processes, use the same sampling time at each traverse point. To avoid timekeeping errors, use an integer, or an integer plus one-half minute, for each traverse point.

8.1.2.3 For batch processes, determine the minimum operating cycle duration, dividing the sampling time evenly between the required numbers of traverse points. After sampling all traverse points once, sample each point again for the same duration of time per sampling point in reverse order until the operating cycle is completed. Sample all traverse points at least once during each test run.

8.1.3 Preparation of Sampling Train.

8.1.3.1 During field preparation and assembly of the sampling train, keep all train openings where contamination can enter sealed until just prior to assembly or until sampling is about to begin. To protect the adsorbent module from radiant heat and sunlight, you must wrap the module with aluminum foil or other suitable material capable of shielding the module from light. The XAD–2 adsorbent resin temperature must never exceed 50 °C (122 °F) because thermal decomposition will occur. Clean and prepare a complete set of sampling train components that will contact the sample for each sampling run, including one complete set to be used as a field train proof blank as described in Section 9.6 of this method.

8.1.3.2 Place approximately 100 mL of water in the second and third impingers but leave the first and fourth impingers empty. Transfer approximately 200 g or more of silica gel from its container to the fifth impinger. Weigh each impinger and the adsorbent module, including the fitting caps, to the nearest 0.5 g using the field balance and record the weight for moisture determination. Remove the aluminum foil from the adsorbent module before weighing. Keep the module out of direct sunlight and rewrap the module with foil immediately after recording the module weight.

8.1.3.3 Using tweezers or clean disposable surgical gloves, place a filter in the filter holder. Be sure that the filter is properly centered, and the gasket properly placed, to prevent the sample gas stream from circumventing the filter. Check the filter for tears after completing the assembly.

8.1.3.4 Prepare the inside of the sampling probe and nozzle by brushing each component while rinsing three times each with acetone and toluene. Install the selected nozzle. You may use connecting systems described in Section 6.1.2 of this method. Mark the probe with heat resistant tape or by some other method to denote the proper distance into the stack or duct for each sampling point. Assemble the train as shown in Figure 23–1 of this method. Orient the adsorbent module vertically so condensed moisture drains into the first impinger. See APTD–0576 Maintenance, Calibration, and Operation of Isokinetic Source-sampling Equipment (U.S. EPA 1972) for details.

8.1.3.5 Turn on the recirculation pump to the adsorbent module and condenser coil and begin monitoring the temperature of the gas entering the adsorbent module. Ensure proper temperature of the gas entering the adsorbent module before proceeding.

8.1.4 Leak-Check Procedure. Same as Section 8.4 of Method 5 of appendix A–3 to 40 CFR part 60.

8.1.5 Sampling Train Operation. Same as Sections 8.5.1 through 8.5.9 of Method 5 of appendix A–3 to 40 CFR part 60.

8.1.5.1 Monitor the filter temperature sensor and record the filter temperature during sampling to ensure a sample gas temperature exiting the filter of 120 °C ± 14 °C (248 °F ± 25 °F), or such other temperature as specified by an applicable subpart of the standards or approved by the Administrator for an application of this method.

8.1.5.2 During testing, you must record the temperature of the gas entering the XAD–2 adsorbent module. The temperature of the gas must not exceed 20 °C (68 °F) for efficient capture of the target compounds.

8.2 Sample Recovery. Begin the cleanup procedure as soon as the probe is removed from the stack at the end of the sampling period. Seal the nozzle end of the sampling probe with PTFE tape or clean (*e.g.,* toluene rinsed) aluminum foil. This method recommends using clean glassware prepared following Section 8.1.1.1 of this method for each sample set in a test series.

8.2.1 When the probe can be safely handled, wipe off all external particulate matter near the tip of the probe. Conduct a post-test leak check. Remove the probe from the train and close off both ends with PTFE tape or clean aluminum foil. Seal off the inlet to the train with PTFE tape, a ground glass cap, or clean aluminum foil.

8.2.2 Transfer the probe and impinger assembly to the cleanup area. This method recommends cleaning and enclosing this area to minimize the chances of losing or contaminating the sample. To avoid sample contamination and unnecessary exposure to toxic chemicals, smoking or eating in the sample recovery area shall not be allowed.

8.2.3 Inspect the train prior to and during disassembly. Note and record

any abnormal conditions (*e.g.,* broken filters, colored impinger liquid). Recover and prepare samples for shipping as follows in Sections 8.2.4 through 8.2.12 of this method.

8.2.4 Container No. 1. Either seal the filter holder or carefully remove the filter from the filter holder and place it in its identified container. If it is necessary to remove the filter, use a pair of cleaned tweezers to handle the filter. If necessary fold the filter such that the particulate cake is inside the fold. Carefully transfer to the container any particulate matter and filter fibers that adhere to the filter holder gasket by using a dry inert bristle brush and a sharp-edged blade. Seal the container and store cool (≤ 20 ± 3 °C, 68 ± 5 °F) for transport to the laboratory.

8.2.5 Adsorbent Module Sample. Remove the module from the train, tightly cover both ends with fitting caps and PTFE tape, remove the foil, drain the recirculating water from the module, weigh and record the module weight, and label the adsorbent module. Moisture measurement in the field using the Method 23 train requires weighing the adsorbent module before the sampling run and after sampling as part of the sample recovery.

8.2.6 Container No. 2. Quantitatively recover material deposited in the nozzle, the front half of the filter holder, and the cyclone, if used, by brushing while rinsing three times with acetone followed by three rinses with toluene. Collect all the rinses in Container No. 2.

8.2.7 Rinse the back half of the filter holder three times with acetone followed by three rinses with toluene. Rinse the sample transfer line between the filter and the condenser three times with acetone followed by three rinses with toluene. If using a separate condenser and adsorbent module, rinse the condenser three times with acetone followed by three rinses with toluene. Collect all the rinses in Container No. 2 and mark the level of the liquid on the container.

8.2.8 Moisture Weight. Weigh the adsorbent module, impingers, and silica gel impinger to within ± 0.5 g using the field balance and record the weights. This information is required to calculate the moisture content of the effluent gas. For PCDD/PCDF-only measurements, discard the liquid after measuring and recording the weight.

8.2.9 Container No. 3. You must save and analyze impinger water samples if PAHs and/or PCBs are the target compounds. Quantitatively recover impinger water samples for analysis if PAHs and/or PCBs are the target compounds by rinsing three times with acetone followed by three rinses with toluene. Collect impinger water and rinses in Container No. 3 and mark the level of the liquid on the container.

8.2.10 Silica Gel. Note the color of the indicating silica gel to determine if it has been completely spent and report its condition on the field data sheet.

8.2.11 Field Sample Handling, Preservation, Storage, and Transport. Store all field samples temporarily in cool (≤ 20 ± 3 °C, 68 ± 5 °F) and dark conditions prior to transport to the laboratory. Ship samples cool (≤ 20 ± 3 °C, 68 ± 5 °F), shielded from ultraviolet light. In addition, follow the procedures in ASTM D6911–15 (Guide for Packaging and Shipping Environmental Samples for Laboratory Analysis) for all samples, where appropriate. To avoid contamination of the samples, pay special attention to cleanliness during transport, field handling, sampling, recovery, and laboratory analysis, as well as during preparation of the adsorbent cartridges.

8.2.12 Sample Custody. Proper procedures and documentation for sample chain of custody are critical to ensuring data integrity. Follow the chain of custody procedures in ASTM D4840–99(2018)e1 (Standard Guide for Sample Chain-of-Custody Procedures) for all samples (including field samples and blanks).

8.3 Sample Storage Conditions and Laboratory Hold Times.

8.3.1 Table 23–10 of this method summarizes the sample storage conditions and laboratory hold times.

8.3.2 Store sampling train rinses and filter samples in the dark at 6 °C (43 °F) or less from the time the laboratory receives the samples until analysis.

8.3.3 You may store adsorbent samples for PCDDs/PCDFs or PCBs prior to extraction in the dark at 6 °C (43 °F) or less for up to one year from the time the laboratory receives the samples.

8.3.4 Protect adsorbent samples destined for PAH analysis from ultraviolet light. You may store adsorbent samples for PAH analysis at 6 °C (43 °F) or less for up to 30 days from the time the laboratory receives the samples.

8.3.5 Analyze PAH extracts within 45 days of extraction.

8.3.6 You may store sample aliquots including archived extracts of PCDD/PCDF, PAH and/or PCB samples in the dark at −10 °C (14 °F) or less for up to one year.

9.0 Quality Control

Note: In recognition of advances that are occurring in sampling and analytical technology, and to allow the test team to overcome analyte sensitivity and matrix interferences, this method allows certain options to increase sample collection volume and to improve separations and the quality of the analysis results for target analytes. It is the laboratory's responsibility to establish the conditions for optimum sample extraction, cleanup, and concentration to meet the performance criteria in this method. However, you may not change the fundamental sampling and analysis techniques, isokinetic sampling with an adsorbent collection media followed by sample extraction, and HRMS detection and isotopic dilution quantification procedures. Section 13 of this method specifies the performance criteria to ensure that options employed for a sample set and analytes of interest are equal to or better than the specificity of the techniques in this method. This method recommends performing a media blank (*i.e.,* batch blank) assessment to evaluate an individual laboratory's performance against the performance criteria in this method. At a minimum, evaluate changes within the alternatives allowed in this method using a media blank sample to re-demonstrate that the performance criteria are achieved.

9.1 Record and report data and information that will allow an independent reviewer to validate the determination of each target compound concentration. At a minimum, record and report the data as described in Sections 9.1.1 through 9.1.7 of this method.

9.1.1 Sample numbers and other sample identifiers. Each sample must have a unique identifier.

9.1.2 Field sample volume.

9.1.3 Field sampling date.

9.1.4 Extraction dates.

9.1.5 Analysis dates and times.

9.1.6 Analysis sequence/run chronology.

9.1.7 Quantitation Reports.

9.1.7.1 This method does not consider EPC-flagged data to be zero concentrations. Calculate the EPC separately for each quantitation ion, if present, and report the lower value as the EPC.

9.1.7.2 In determining compliance with any PCDD and PCDF standard developed using zero for values that are below the detection level of the method, including federal emission standards using Method 23 promulgated under 40 CFR parts 60 and 63 prior to [DATE OF PUBLICATION OF THE FINAL RULE], use zero for the determination of total and weighted concentrations when the target compound is not detected. For all other circumstances, unless otherwise specified in applicable regulations, permits, or other requirements, when a target compound is measured at or below EDL, use EDL as the concentration for calculating compliance.

9.1.7.3 You must report your EDLs with analysis results.

9.1.8 Performance criteria results (See Section 13 of this method).

9.2 Isotopically Labeled Spike Recovery Results.

9.2.1 Pre-sampling Adsorbent Spike and Pre-extraction Filter Spike Recoveries. Pre-sampling adsorbent and pre-extraction filter spike recoveries must demonstrate on a per sample basis that recovery of the labeled standard achieved the requirements in Section 13 of this method. Recoveries below the acceptable range for the pre-sampling spikes may be an indication of breakthrough in the sampling train.

9.2.1.1 If the recovery of all the pre-sampling adsorbent spike standards is below 70 percent, the sampling runs are not valid, and you must repeat the invalid runs. As an alternative, you do not have to repeat the invalid sampling runs if the average pre-sampling adsorbent spike recovery is 25 percent or more and you divide the final results by the average fraction of pre-sampling adsorbent spike recovery.

9.2.1.2 If the recovery of the pre-extraction filter spike is below 70 percent, the filter sampling extraction recovery is not valid, and you must flag the test run results.

9.2.2 Pre-extraction Spike Recoveries. Pre-extraction spike recoveries must demonstrate on a per sample basis that recovery of the labeled standard achieved the requirements in Section 13 of this method. Recoveries below the acceptable range for pre-extraction spikes are an indication that sample preparation procedures did not adequately address sample and or sample matrix processing to recover native target compounds.

9.2.3 Pre-analysis Spike Recoveries. Pre-analysis spike recoveries must demonstrate on a per sample basis that adequate labeled standard signal meets the requirements in Section 13 of this method. Add pre-analysis standards to every sample (including blanks, quality control samples, and calibration solutions) in a known concentration. You may analyze archive samples to attempt meeting requirements for the compounds that do not meet the pre-analysis recovery criteria. Recoveries below the acceptable range for pre-analysis spikes are an indication that sample injection or instrument drift has failed beyond the ability to correct using pre-analysis standard results.

9.3 Capillary GC columns must be able to achieve the separation resolution specified in Sections 13.3, 13.4, and/or 13.5 of this method for the target compounds analyzed in test samples.

9.4 Batch Blank Samples. Evaluate chromatographic separation performance, spiking errors, and continuing calibration checks using a batch blank sample prepared from typical filter and absorbent media, spiked with isotopically labeled compounds and extracted identically to the procedures used to prepare samples. Analyze batch blank samples at least once during each analytical sequence or every 24 hours, whichever period is shorter. Section 13.2 of this method describes the performance criteria for field train proof blank assessment samples and batch blank samples.

9.5 Detection Limits. Calculate the EDL using the equation in Section 12.11 of this method. If the field train proof blank or the batch blank results are above the EDL, calculate and report the test-specific and compound-specific DLs equal to the sum of the EDL and the larger of the batch or field train proof blank results. If the field train proof blank and the batch blank results are equal to or less than the EDL, report the test-specific and compound-specific DLs as the EDL.

9.6 Field Train Proof Blank Assessment. Conduct at least one field train proof blank for each test series at a single facility. A field train proof blank train consists of a fully assembled train at the sampling site. Prepare and assemble the blank train in a manner identical to that described in Sections 8.1.3 and 8.1.4 of this method. The blank train must remain assembled for the same average amount of time samples are collected. Recover the blank train as described in Section 8.2 of this method. Follow all subsequent steps for blank train sample preparation and analysis used for field train samples including data reporting.

10.0 Calibration and Standardization

10.1 Sampling System. Same as Sections 6.1 and 10.1 through 10.7 of Method 5 of appendix A–3 to 40 CFR part 60.

10.2 HRGC/HRMS System.

10.2.1 Mass Resolution. Tune the HRMS instrument to a mass resolution (R) of at least 10,000 at 5 percent of the peak height or 25,000 at 50 percent of the peak height where resolution is calculated as an $R = M/\Delta M$, where M is the resolving power and ΔM is the peak width. You may use peak matching and the chosen perfluoro-kerosene (PFK) or perfluorotributylamine (FC43) reference peak to verify that the exact mass is within 5 ppm of the required value. Assess the resolution at three m/z ranges representing the low, mid and high m/z range of the masses used to measure the target compound class.

10.2.2 Initial Calibration. Calibrate the HRGC/HRMS system using a minimum of five concentrations over a range that brackets typical field sample concentrations and the concentration of isotopically labeled standards in spiked samples. Tables 23–11, 23–12, and/or 23–13 of this method, as applicable to the compound classes analyzed, show the calibration concentrations recommended by this method. Perform calibration and subsequent analyses on an absolute mass (pg/microliter (µL)) basis. The recommended calibration range ensures isotopic labels can be accurately distinguished from native compounds and provides the initial response factors that are corrected by isotopic recovery.

10.2.2.1 Lock Channels. Tables 23–4, 23–5, and 23–6 of this method provide the recommended mass spectrometer lock channels for PCDD/PCDFs, PAHs, and PCBs, respectively. You may use PFK or FC43 as your lock mass standard. Monitor the quality control check channels specified in these tables to verify instrument stability during the analysis. Flag data resulting from failure to maintain lock channel signal during analysis.

10.2.2.2 The relative standard deviation (RSD) for the mean response factor from each of the unlabeled analytes and isotopically labeled compounds used in an analysis must be less than or equal to the values in Table 23–14 of this method.

10.2.2.3 The signal-to-noise (S/N) ratio for the MS signal present in every selected ion current profile must be greater than or equal to 10 in all concentrations of calibration standards for unlabeled targets and isotopically labeled standards. The ion abundance ratios must be within the control limits in Table 23–15 of this method.

10.2.3 Daily Performance Check.

10.2.3.1 Continuing Calibration Check. Inject a mid-level calibration standard C4 from Table 23–11, 23–12, or 23–13 of this method for the compound class being analyzed at least once every 24 hours during an analysis sequence. Calculate the RRF for each compound and compare each RRF to the corresponding mean RRF obtained during the initial calibration. The analyzer performance is acceptable if the measured RRFs for the labeled compounds for a 24-hour period are within the limits of the values shown in Table 23–14 of this method. The RRF for each native compound measured in a CCV must not deviate from the initial calibration by more than the limits shown in this table.

10.2.3.2 The ion abundance ratios must be within the allowable control limits shown in Table 23–15 of this method.

10.2.3.3 Repeat the initial calibration when there is a failure to meet the requirements for acceptable continuing calibration check analysis.

10.2.3.4 Column Separation Check. Use the results from a continuing calibration check sample to verify and document the resolution required in Sections 13.3, 13.4, or 13.5 of this method for the compound classes analyzed with this method.

10.2.3.5 If you use a confirmation column, perform the resolution check in Section 10.2.3.4 of this method to document the required resolution on the confirmation column.

11.0 Analysis Procedure

11.1 Sample Extraction and Concentration. The sample extraction procedures in this method are the same for PCDD, PCDF, PCB and PAH targets. Figure 23–4 provides a flow chart showing sample container combination and extraction steps. Do not allow samples and extracts destined for PAH or PCB analysis to concentrate to dryness because the lower molecular weight PAHs and the mono- through tri-chlorobiphenyls may be totally or partially lost.

11.1.1 Optional Soxhlet Precleaning. Place an extraction thimble (see Section 6.3.3.3 of this method) and a plug of glass wool into the Soxhlet apparatus equipped with a Dean-Stark trap, charge the apparatus with toluene, and reflux for a minimum of 3 hours. Remove the toluene and discard it. Remove the extraction thimble from the extraction system and place it in a glass beaker to catch the solvent rinses from sample transfer to the extraction thimble. Retain the clean glass wool plug. Alternatively, confirm that the batch blank for reagents, materials, and media meets the performance requirements in Section 13 of this method.

11.1.2 Container No. 1 (Filter) Preparation. Spike the filter with the appropriate pre-extraction filter recovery standard solution(s) shown in Tables 23–7, 23–8, and 23–9 of this method taking care that all spike liquid is distributed on the filter. Allow the filter to air dry, then transfer the filter and the contents of Container No. 1 directly to the glass extraction thimble in the glass solvent rinse catch beaker so that the filter will be completely immersed in the solvent during extraction.

11.1.3 Adsorbent Module. Transfer the adsorbent material to the glass extraction thimble in the glass solvent rinse catch beaker. Rinse the module into the thimble in the beaker with the contents of Container No. 1. Alternatively, suspend the adsorbent module directly over the extraction thimble in a beaker, then, using a wash bottle containing methanol, flush the XAD–2 into the thimble onto the filter. Thoroughly rinse the interior of the glass module that contained the XAD–2 with toluene.

11.1.4 Container No. 2 (Acetone and Toluene Rinses). Concentrate the sample to a volume of no less than 5 mL. Concentrate samples containing toluene using a heating mantle and three-ball Snyder column or a rotary evaporator. Rinse sample Container No. 2 three times with small portions of toluene and add these to the concentrated solution and concentrate further to no less than 5 mL. This residue contains particulate matter removed in the rinse of the train probe and nozzle. Rinse the concentrated material from Container No. 2 into the glass extraction thimble containing the filter and the XAD–2 resin.

11.1.5 Transfer the solvent contained in the collection beaker to the extraction apparatus solvent reservoir. Rinse the beaker into the Soxhlet extraction apparatus solvent reservoir three times with small portions of toluene.

11.1.6 Container No. 3 (Impinger Water and Rinses). For PAH and PCB analysis, transfer the contents of Container No. 3 to a separatory funnel. Adjust to pH 2 with 6 N sulfuric acid, if necessary. Rinse the sample container with three successive 10-mL aliquots of the toluene and these rinses to the separatory funnel. Extract the sample by vigorously shaking the separatory funnel for 5 minutes. After complete separation of the phases, remove the solvent and filter it through a bed of precleaned, dry sodium sulfate into the Soxhlet extraction apparatus solvent reservoir. Repeat the extraction step two additional times. Adjust the pH to 11 with 6 N sodium hydroxide, re-extract the impinger water and rinses, and filter it through a bed of precleaned, dry sodium sulfate into the Soxhlet extraction apparatus solvent reservoir. Rinse the sodium sulfate into the extraction apparatus solvent reservoir with fresh solvent and discard the desiccant.

11.1.7 Add the appropriate pre-extraction spikes for the compound classes being analyzed (Tables 23–7, 23–8, and 23–9 of this method) to the extraction thimble containing the combined filter and adsorbent sample fractions. Cover the contents of the extraction thimble with the cleaned glass wool plug to prevent the XAD–2 resin from splashing into the solvent reservoir of the extractor. Place the extraction thimble into the Soxhlet extraction apparatus.

11.1.8 Pour additional toluene to fill the reservoir approximately two-thirds capacity. Add PTFE boiling chips and assemble the apparatus.

11.1.9 Adjust the heat source to cause the extractor to cycle approximately three times per hour. Extract the sample for sufficient time to meet the pre-extraction spike recovery performance criteria in Section 13 of this method. The solvent should cycle completely through the system a minimum of 48 times.

Note: Samples containing high carbon particulate loading, such as those collected downstream of an activated carbon injection system, may require extended extraction time or treatment such as those described in Stieglitz 1986.

11.2 Sample Aliquots for Cleanup and Analysis.

11.2.1 After extraction, allow the Soxhlet apparatus to cool.

11.2.2 Initial Extract Concentration. You may perform an initial concentration of the sample extract using the techniques (*e.g.,* Kuderna Danish, rotary evaporation, nitrogen blowdown) found to recover pre-extraction isotopically labeled compounds sufficient to meet the performance criteria in Section 13 of this method. Concentrate initial extracts in toluene using a heating mantle and three-ball Snyder column or a rotary evaporator. Concentrate the field train proof blank and batch blank samples in the same manner as samples.

Note: For samples requiring PCB or PAH analysis, you should perform the initial concentration using a three-ball Snyder column on the original extraction receiver flask. To meet isotopically label spike recoveries for low molecular weight PAHs and PCBs, do not evaporate samples to dryness.

11.2.3 Allow the sample to cool. You should use a minimum of one half of the sample extract for PCDD/PCDF analysis. You may archive the remaining sample extract or further split the extract for PCB and/or PAH analysis and archive.

11.2.4 If necessary, further concentrate the sample for cleanup and analysis using concentration techniques (*e.g.,* Kuderna Danish, rotary evaporation, nitrogen blowdown) found to recover pre-extraction isotopically labeled compounds sufficient to meet the performance criteria in Section 13 of this method.

11.3 Sample Cleanup and Fractionation. You may process a separate aliquot/split of the sample extract for each of the compound classes

analyzed by this method. Sample cleanup for each compound class may include techniques in addition to column chromatography such as acid/base back-extraction or high-performance liquid chromatography (HPLC) to isolate target compounds from interferences. This section includes a description of column chromatography shown to meet the performance criteria in Sections 9.2 and 13 of this method. The following sample cleanup and fractionation procedures are recommended but not required. You may modify cleanup column dimensions to meet manual or automated cleanup procedures as technology changes and improves. You must evaluate the cleanup and fractionation procedures used to confirm acceptable recovery of isotopically labeled standards. The alternative procedures must provide sufficient cleanup to meet method identification criteria (Section 11.4.3.4 of this method) and recovery criteria (Section 9.2 of this method). Section 13 of this method summarizes the method performance requirements.

Note: Recommendations in this section provide a cleanup approach that may allow multiple compound class measurement from a single aliquot of the original sample extract. Typically, Florisil® and alumina are used to separate PAH and chlorobiphenyl ether compounds from PCDD and PCDF target compounds. Use acid, neutral, and basic silica gel and cleanup procedures to remove nonpolar and polar interferences from samples destined for PCB and PCDD/PCDF analysis. Use Carbopack®/Celite® (or other equivalent carbon-based column material) to remove other nonpolar interferences.

11.3.1 PAH and PCDEs Fractionation and Cleanup. You may use a Florisil® column to remove PAHs and PCDEs from a sample. You may also fractionate samples using Florisil® as the first cleanup step to separate PAH for analysis.

Note: High concentrations of PAHs may interfere with mass spectrometer lock mass or saturate the source, leading to failure of performance criteria for PCDD/PCDF or PCB analysis.

11.3.1.1 Pack a 6-mm ID chromatographic column or equivalent diameter glass pipet with a glass wool plug followed by approximately 1.5 g (approximately 2 mL) of activated Florisil®. Add approximately 1 cm (approximately 1 mL) of anhydrous sodium sulfate followed by a glass wool plug to the head of the column. Pre-elute the column with 10 mL of methylene chloride followed by 10 mL of hexane and discard the eluate.

11.3.1.2 When the solvent is within 1 mm of the packing, transfer the concentrated extract (up to 5 mL) to the top of the Florisil® column, rinse the sample container twice with 1 to 2 mL of hexane, adding each rinse to the column, and elute the column with 35 mL of 5-percent dichloromethane in hexane. This fraction (Fraction 1) should contain target PCBs, and selected hydrocarbons and chlorinated monoaromatic compounds.

11.3.1.3 Elute the column with 35 mL of 15-percent of dichloromethane in hexane and collect the eluate. This fraction (Fraction 2) should contain target PCDD/PCDF compounds.

11.3.1.4 Elute the column with 50 mL of 50-percent dichloromethane in hexane. The fraction (Fraction 3) should contain target PAHs.

11.3.1.5 If necessary to remove any remaining polar organic compounds, elute the column with 70 mL of 15-percent acetone in hexane.

11.3.2 PCDD/PCDF and PCB Fractionation and Cleanup. You may remove PAHs from the original aliquot of extract used for PCDD/PCDF analysis as described in Section 11.3.1 of this method. Design the column cleanup chromatography for PCDD/PCDFs and PCBs such that two consecutive fractions are collected (one with PCDD/PCDFs and one with PCBs) without impacting the DLs. Depending on the source and sample matrix of the original sample, one or more of the following column cleanup approaches may be necessary to remove polyhalogenated diphenyl ethers. You may use any number of permutations found in the referenced literature for this cleanup if the pre-extraction standard recoveries from field and batch blank samples meet the associated performance criteria in Section 13 of this method. Alternatively, you may use an automated cleanup approach that meets the labeled spike recovery requirements in Section 13 of this method.

11.3.2.1 Silica Gel Column Chromatography. Pack one end of a glass column, approximately 20 mm ID x 230 mm long, with glass wool. Add in sequence to the glass column, 1 g of silica gel, 2 g of sodium hydroxide impregnated silica gel, 1 g of silica gel, 4 g of acid-modified silica gel, 1 g of silica gel, and 1 cm layer of anhydrous sodium sulfate. Pre-elute the column with 30 to 50 mL of hexane leaving a small quantity of hexane above the sodium sulfate layer. Discard the pre-elution hexane. Add the sample extract, dissolved in 5 mL of hexane to the head of the column. Allow the sample to flow into the column leaving a small quantity of hexane above the sodium sulfate layer. Rinse the extract container with two additional 5-mL rinses of hexane and apply each rinse to the column separately as the previous addition elutes. Elute the column with an additional 90 mL of hexane and retain the entire eluate. Concentrate this solution to a volume of about 1 mL using the nitrogen evaporative concentrator (see Section 6.3.5 of this method).

11.3.2.2 Silver Nitrate Silica Gel Column Chromatography. Pack a column (6 mm ID, 150 mm in length) sequentially with 1 g of silica gel and 1 g of 10-percent silver nitrate silica gel followed by a layer of about 10 mm of sodium sulfate (anhydrous). Wash the column sufficiently with hexane, elute until the liquid level reaches to the upper end of the column, and then load the sample solution that is concentrated under vacuum to be about 5 mL. Wash the inner side several times with a small amount of hexane, elute with 200 mL of hexane at a flow rate about 2.5 mL/min (approximately one drop per second) to elute PCDDs.

11.3.2.3 Multi-layer Silica Gel Column Chromatography. You may use a multi-layer silica gel column in place of separate silica columns. Pack a column of 20 mm ID and 300 mm in length sequentially by the dry pack method with 0.9 g of silica gel, 3.0 g of 2-percent potassium hydroxide silica gel, 0.9 g of silica gel, 4.5 g of 44-percent sulfuric acid silica gel, 6.0 g of 22-percent sulfuric acid silica gel, 0.9 g of silica gel, 3.0 g of 10-percent silver nitrate silica gel, 2.0 g of silica gel and 6.0 g of sodium sulfate (anhydrous). Wash the column sufficiently with hexane, elute until the liquid level reaches to the upper end of the column, and then load the sample solution. Wash the inner side of the transfer vessel several times with a small amount of hexane, elute with 150–200 mL of hexane at a flow rate about 2.5 mL/min (approximately one drop per second) to elute PCDDs/PCDFs.

11.3.2.4 Basic Alumina Column Chromatography. Pack a column (20 mm ID, 300 mm in length) with approximately 6 to 12 g of basic alumina. Pre-elute the column with 50 to 100 mL of hexane. Transfer the concentrated extract from the previous column cleanup to the top of the basic alumina column. Allow the sample to flow into the column leaving a small quantity of solvent above the top of the bed. Rinse the extract container with two additional 1-mL rinses of hexane and apply each rinse to the column separately as the previous addition elutes. Elute the column with 100 mL hexane to remove the interferences. Elute the PCDDs/PCDFs from the column with 20 to 40 mL of 50-percent

methylene chloride in hexane. The ratio of methylene chloride to hexane may vary depending on the activity of the alumina used in the column preparation. Do not let the head of the column go without solvent. The first 100 mL hexane eluate is not used for subsequent PCDD/PCDF analysis. The eluate is concentrated to approximately 0.5 mL using the nitrogen evaporative concentrator.

11.3.2.5 Carbopack® C/Celite® 545 Column or Equivalent. Cut both ends from a 10 mL disposable Pasteur pipette (see Section 6.4.1 of this method) to produce a 10 cm column. Fire-polish both ends and flare both ends if desired. Insert a glass wool plug at one end and pack the column with 0.55 g of Carbopack®/Celite® (see Section 7.8.9.4 of this method) to form an adsorbent bed approximately 2 cm long. Insert a glass wool plug on top of the bed to hold the adsorbent in place. Pre-elute the column with 5 mL of toluene followed by 2 mL of methylene chloride:methanol:toluene (15:4:1 v/v), 1 mL of methylene chloride:cyclohexane (1:1 v/v), and 5 mL of hexane. If the flow rate of eluate exceeds 0.5 mL/minute, discard the column. Do not let the head of the column go without solvent. Add the sample extract to the column. Rinse the sample container twice with 1 mL portions of hexane and apply separately to the column. Apply 2 mL of hexane to the head of the column to complete the transfer. Elute the interfering compounds with two 3 mL portions of hexane, 2 mL of methylene chloride:cyclohexane (1:1 v/v), and 2 mL of methylene chloride:methanol:toluene (15:4:1 v/v). Discard the eluate. Invert the column and elute the PCDDs/PCDFs with 20 mL of toluene. If carbon particles are present in the eluate, filter through glass-fiber filter paper. Concentrate the eluate to approximately 0.5 mL using the nitrogen evaporative concentrator for further cleanup or analysis by HRGC/HRMS.

11.4 PCDD, PCDF, PCB and PAH Analysis.

11.4.1 Analyze the sample with an HRGC/HRMS using the instrumental parameters in Sections 11.4.2 and 11.4.3 of this method.

11.4.1.1 Immediately prior to analysis, add an aliquot (typically 20 microliters (µl)) of the pre-analysis standard solution(s) from Table 23–7, 23–8, or 23–9 of this method to each sample as appropriate for the compounds you are measuring by this method.

11.4.1.2 Inject an aliquot of the sample extract into the GC. You may perform separate analyses using different GC columns for each of the target compound classes. A 1-µl aliquot of the extract is typically injected into the GC. Perform calibration and analysis for each target compound class using the same sample injection volume and concentration calculations.

11.4.1.2.1 If target compounds are not resolved sufficient from other target compounds or interferences in the sample to meet the requirements in Section 10.2.3.4 or 10.2.3.5 of this method, as applicable to the compound class being analyzed, or as otherwise specified in an applicable regulation, permit, or other requirement, analyze another aliquot of the sample using an alternative column that provides elution order to uniquely quantify the target compounds subject to interference on the first GC column.

11.4.1.2.2 You may use column systems other than those recommended in this method provided the analyst is able to demonstrate, using calibration and performance checks, that the alternative column system is able to meet the applicable specifications of Section 10.2.3.4 or 10.2.3.5 of this method.

11.4.2 Example Gas Chromatograph Operating Conditions.

11.4.2.1 Injector. Configured for capillary column, splitless, 250 °C (482 °F).

11.4.2.2 Carrier Gas. Helium, 1 to 2 mL/min.

11.4.2.3 Oven. Optimize the GC temperature program to achieve the required separation and target compound recovery for the GC column in use. Table 23–16 of this method presents the typical conditions for a DB5–MS column.

11.4.3 High-Resolution Mass Spectrometer.

11.4.3.1 Ionization Mode. Electron ionization.

11.4.3.2 Source Temperature. Maintain the source temperature in the range of 250 to 300 °C (482 to 572 °F).

11.4.3.3 Ion Monitoring Mode. Tables 23–4, 23–5, and 23–6 of this method summarize the various ions to be monitored for PCDD/PCDFs, PAHs, and PCBs, respectively.

11.4.3.4 Identification Criteria for Target Compounds. Use the following identification criteria for the characterization of target compounds in this method. The available native and isotopically labeled standards allow the unique identification of all PCDD/PCDF, PAH, and selected PCB congeners required in this method. Also see Sections 13.12 and 13.13 of this method for identification criteria for PCDD/PCDF/PCB and PAH target compounds, respectively.

11.4.3.4.1 For PCDD/PCDFs and PCBs, Table 23–15 of this method provides the integrated ion abundance ratio of primary and secondary target compound ions for the identification of target compounds. When the ion abundance ratio for a target analyte is outside the performance criteria, you may reanalyze samples on an alternative GC column to resolve chemical interferences, tune the mass spectrometer to operate at a higher mass resolution to discriminate against the interference(s), and/or reprocess an archived sample through the cleanup procedure to remove the interference(s). Report analysis results that do not meet the identification criteria as an estimated maximum possible concentration (EPC). Calculate the EPC separately for each quantitation ion, if present, and report the lower value as the EPC. This method does not consider EPC-flagged data to be zero concentrations.

Note: Some EPCs are caused by poor ion statistics when the concentration of the target compound is at or near the DL. If you use the primary ion to determine and report the target compound concentration in these cases, reanalysis of samples is not necessary.

11.4.3.4.2 The retention time for the analytes must be within 3 seconds of the corresponding ^{13}C-labeled pre-extraction standard.

11.4.3.4.3 The signals for the two exact masses in Tables 23–4 and 23–6 of this method for PCDD/PCDFs and PCBs, respectively, must be present and must reach their maximum response within two seconds of each other.

11.4.3.4.4 Identify and quantify specific target compounds or isomers that do not have corresponding ^{13}C-labeled standards by comparing to the pre-extraction labeled standard of the same compound class with the nearest retention time to target compound.

11.4.3.4.5 For the identification of specific PCB isomers, the retention time of the native congener must be within 0.006 relative retention time (RRT) units of the pre-extraction isotopically labeled standard.

11.4.3.4.6 For qualitative identification, the S/N ratio for the GC signal present in every selected ion current profile for native compound response must be greater than or equal to 2.5. The ion abundance ratios must be within the control limits in Table 23–15 of this method for the compound class measured.

11.4.3.4.7 The confirmation of 2,3,7,8–TeCDD and 2,3,7,8–TeCDF must satisfy the separation criteria in Section

10.2.3.4 of this method and all the identification criteria specified in Sections 11.4.3.4.1 through 11.4.3.4.6 of this method.

11.4.3.4.8 Chlorodiphenyl Ether Interference. If chromatographic peaks are detected at the retention time of any PCDDs/PCDF in any of the m/z channels used to monitor chlorodiphenyl ethers, there is evidence of a positive interference and you may opt to flag data noting the interference and keep the value to calculate PCDD/PCDF concentration as EPC or conduct a complete reanalysis to remove or shift the interference. This method recommends alumina (see Section 11.3.2.4 of this method) and Florisil® (see Section 11.3.1 of this method) liquid column chromatography packing materials for removal of chlorodiphenyl ethers during sample cleanup.

11.4.3.4.9 Set the mass spectrometer lock channels as specified in Tables 23–4, 23–5, and 23–6 of this method for PCDD/PCDFs, PAHs, and PCBs, respectively. Monitor the quality control check channels to verify instrument stability during the analysis. If the signal varies by more than 25 percent from the average response, flag results for all isomers at corresponding retention time as QCF. You have the option to conduct additional cleanup procedures on an archived portion of the sample if the archive is available, or dilution the original sample and reanalysis or follow other quality review that demonstrates the target analyte and its corresponding isotopically labeled standard are equally affected by the change in the control check channels. When you conduct a complete reanalysis, reanalyze all concentration calculations based on the reanalyzed sample.

11.4.3.4.10 Identification Criteria for PAHs. The RRT between each native and labeled compound must be within 0.006 RRT units. The signals for the characteristic ion listed in Table 23–5 of this method must be present.

11.4.3.5 Quantitation. Measure the response of each native target compound and the corresponding pre-extraction standard. Use the equation in Section 12.7 of this method to sum the peak areas for the two quantitation ions monitored for each analyte and calculate the mass of the target compound(s) in the injection using the CCV RF. Use the pre-extraction recovery standard compounds to correct the homologous congener results for variations in recovery from the extraction, cleanup, and concentration steps of the analysis. Recovery of pre-extraction standards must meet minimum specifications (in Section 9.2. of this method) to ensure that the method performance and reliability have not been compromised by unacceptable losses during sample processing. Table 23–17 of this method shows the assignments for single isotopically labeled compounds for use in calculating the response factor and the concentrations of PCBs. Recoveries of all labeled standards must meet the minimum recovery specifications in this method and unacceptably low recoveries are an indication of the sample processing step that caused the low recoveries.

11.4.3.5.1 Use Eq. 23–7 to calculate the mass of each target compound or group in the extract.

11.4.3.5.2 Use Eq. 23–8 to calculate the mass per dscm of each target compound or group in the sample.

11.4.3.5.3 Quantify indigenous PCDD and PCDF in its homologous series using the corresponding native and pre-extraction standard response in its homologous series. For example, use $^{13}C_{12}$-2,3,7,8-tetra chlorinated dibenzodioxin to calculate the concentrations of all other tetra chlorinated isomers.

11.4.3.5.4 As an option or as required or specified in applicable regulations, permits, or other requirements, you may quantify any or all other PCB congeners as resolved or coeluting combinations using the response of the nearest eluting native target PCB and the response of the pre-extraction isotopic label assigned in appendix A to this method.

11.4.3.5.5 As an option or as required or specified in applicable regulations, permits, or other requirements, report the total concentration of congeners at a given level of chlorination (homolog; *i.e.,* total TrCB, total PeCB, total HxCB) by summing the concentrations of all congeners identified in the retention time window for the homologs as assigned in appendix A to this method.

11.4.3.5.6 As an option or if required in an applicable regulation, permit or other requirement, total chlorinated biphenyls (CBs) may be reported by summing all congeners identified at all window-defined congeners (WDCs) as assigned in appendix A to this method.

12.0 Data Analysis and Calculations

Note: Same as Section 12 of Method 5 of appendix A–3 to 40 CFR part 60, with the following additions.

12.1 Nomenclature.

Aai = Integrated ion current (area) of the noise for the primary and secondary m/z values at the retention time of the analyte.

A*ci = Integrated ion current (area) of the primary and secondary m/z values of the pre-extraction (internal) standard i in the calibration standard.

$A1_l$ = Integrated ion current of the primary m/z values for the isotopically labeled compound (assigned in Tables 23–4, 23–5, and 23–6 of this method).

$A1_n$ = Integrated ion current of the primary m/z values for the target native compound.

$A2_l$ = Integrated ion current of the secondary m/z's for the isotopically labeled compound. For PAH $A2_l = 0$.

$A2_n$ = Integrated ion current of the secondary m/z values for the target native compound. For PAH $A2_n = 0$.

C_l = The concentration of the labeled compound used to perform isotope recovery correction, pg/µL. Tables 23–4, 23–5, and 23–17 of this method provide the compound mass assignments.

C_n = The concentration of the target native compound, pg/µL.

C_i = Concentration of target native compound i in the sample, pg/µL.

C_{idscm} = Concentration of target native compound i in the emission gas, pg/dscm.

C_{iext} = Concentration of target native compound i in the extract, pg.

C_T = Total concentration of target compounds in the sample, pg/µL.

D = Difference in the RRF of the continuing calibration verification compared to the average RRF of the initial calibration, percent (%).

dscm = Dry standard cubic meters of gas volume sample measured by the dry gas meter, corrected to standard conditions.

H_{ai} = Summed heights of the noise at the retention time of the analyte in the two analyte channels.

H*ci = Summed heights of the noise at the primary and secondary m/z's of the pre-extraction standard i in the calibration standard.

m_i = Mass of compound i, pg.

m^*_i = Mass of pre-extraction (internal standard) compound i, pg.

n = Number of values.

NOAAT = National Oceanic and Atmospheric Administration isotopic labeled congener for PCB of interest.

R* = Recovery of labeled compound standards, %.

RRF_i = Relative response factor of a target compound at calibration level i.

RRF_{ccv} = Relative response factor of a target compound in the continuing calibration verification.

RSD = Relative standard deviation, in this case, of RRFs over the five calibration levels, %.

SD_{RRF} = Standard deviation of initial calibration RRFs.

V_{ext} = Extract volume, µL.

WHOT = World Health Organization acronym used to designate WHO isotopic labeled toxic analog.

WDC = Window-defined congener representing an isotopically labeled PCB that defines the beginning or end of a retention time window bracketing a PCB homolog level of chlorination.

12.2 Individual Compound RRF for Each Calibration Level i. The equation for the response factor of each target native compound relative to its labeled pre-extraction spike analog includes the integrated ion current of both the primary and secondary m/z values for each compound in the calibration standard. Use this equation to calculate the RRF for the continuing calibration verification for comparison to the average RRF from the initial calibration.

$$RRF_i = \frac{(A1_n + A2_n)C_l}{(A1_l + A2_l)C_n} \quad \text{Eq. 23-1}$$

12.3 Average RRF for Each Compound Over the Five Calibration Levels.

$$\overline{RRF} = \frac{1}{n}\sum_{i=1}^{n} RRF_i$$

Eq. 23-2

12.4 Percent RSD of the RRFs for a Compound Over the Five Calibration Levels. The requirement for the initial calibration RSD is in Section 13.10 and Table 23–14 of this method.

$$RSD = \frac{SD_{RRF}}{\overline{RRF}} x\ 100\%$$

Eq. 23-3

12.5 Standard Deviation of the RRFs for a Compound Over the Five Calibration Levels.

$$SD_{RRF} = \sqrt{\sum_{i=1}^{n} \frac{(x_i - \bar{x})^2}{n-1}}$$

Eq. 23-4

12.6 Percent Difference of the RRF of the Continuing Calibration Verification Compared to the Average RRF from the Initial Calibration for Each Target Compound. The requirement for the continuing calibration verification percent difference is in Section 13.11 and Table 23–14 of this method.

$$D = \frac{RRF_{ccv} - \overline{RRF}}{\overline{RRF}} x\ 100\%$$

Eq. 23-5

12.7 Concentration of Individual Target Compound i in the Extract by Isotope Dilution (pg/µL). This equation corrects for the target native compound recovery by its labeled pre-extraction spike analog. To accomplish this the pre-extraction spike, labeled compound levels must remain constant.

$$C_i = \left[\frac{C_l\,(A1_n + A2_n)}{(A1_l + A2_l)RRF_{CCV}}\right]$$

Eq. 23-6

12.8 Concentration of the Individual Target Compound i in the Sample Extract (pg).

$$C_{iext} = C_i\, V_{ext} \quad \text{Eq. 23-7}$$

12.9 Mass of the Individual Target Compound or Group i in the Emission Gas (pg/dscm).

$$C_{idscm} = \frac{C_{iext}}{dscm} \quad \text{Eq. 23-8}$$

12.10 Recovery of Labeled Compound Standards. Use this equation to determine the recovery of any labeled compounds, including pre-sampling spikes, pre-extraction filter spike, pre-extraction spikes, pre-analysis spikes. The recovery performance criteria for these spikes is in Sections 13.15, 13.16, and 13.17 of this method.

$$R^* = \frac{conc.\ found}{conc.\ spiked}\ x\ 100\%$$

Eq. 23-9

12.11 Estimated Detectable Limit (EDL).

$$EDL = \frac{2.5\ (H_{ai})\ m*_i}{H*_{ci}\ RRF_i}$$

Eq. 23-10

12.12 Total Concentration.

$$C_T = \frac{1}{n}\sum_{i=1}^{n} C_i \quad \text{Eq. 23-11}$$

Note: Unless otherwise specified in applicable regulations, permits or other requirements, count any target compounds reported as non-detected as EDL when calculating the concentration of target compounds in the sample.

13.0 Method Performance

13.1 Residual Toluene Quality Check. If adsorbent resin is cleaned or recleaned by the laboratory, a quality control check for residual toluene must be ≤1,000 µg/g of adsorbent. See appendix B to this method for procedures to assess residual toluene.

13.2 Field Train Proof Blank and Batch Blank Sample Assessment. Conduct at least one field train proof blank for each test series at a single facility or sampling location. Analyze at least one batch blank sample during an analytical sequence or every 24 hours, whichever is shorter. Native target compound concentrations must be less than or equal to three times the EDL of the method or 10 times lower than the quantitation limit required by the end use of the data, whichever is higher. If blank assessment fails this criterion, flag sample data from this test with explanation that the blank samples failed the method criteria.

13.3 GC column systems used to measure PCDD/PCDFs must meet the column separation requirements in Section 6.5.2.1 of this method and the applicable requirements in Sections 10.2.3.4 and 11.4.3.4 of this method using calibration and batch blank performance checks. Failure to meet this chromatographic resolution criterion requires data from this analysis to be flagged explaining the potential bias of the results. A mid-concentration standard containing all of the native target PCDD/PCDFs may be used to demonstrate this requirement.

13.4 GC column systems used to measure PAHs must meet the column separation requirements in Section 6.5.2.2 of this method and the applicable requirements in Sections 10.2.3.4 and 11.4.3.4 of this method using calibration and batch blank performance checks. Failure to meet this chromatographic resolution criterion requires data from this analysis to be flagged explaining the potential bias of the results.

13.5 GC systems used to measure PCBs must meet the column separation requirements in Section 6.5.2.3 of this method and the applicable requirements in Sections 10.2.3.4 and 11.4.3.4 of this method of this method using calibration and batch blank performance checks, and be able to achieve unique resolution and identification of the toxics for determination of a TEQ_{PCB} using TEFs (American Society of Mechanical Engineers 1984).

13.6 Confirmation Column. If target compounds are not sufficiently resolved from other target compounds or interferences in the sample to meet the requirements for target compounds in Sections 13.3, 13.4, and/or 13.5 of this method, analyze another aliquot of the sample in a separate run using an alternative column that provides elution order to uniquely quantify the target compounds subject to interference on the first GC column.

13.7 Detection Limits. If the DLs as determined in Section 9.5 of this method meet the target DLs shown in Tables 23–18, 23–19, and 23–20 of this method for the target compounds determined with this method, the DLs

are considered acceptable. If the compound specific DLs are less than 50 percent of the emission standard, the DLs are acceptable. If the DL requirements are not met, you must flag native compound data that fails to meet these criteria and provide a description of the impact on the data as part of the quality narrative for the sample analyses.

13.8 Tune. Tune the HRGC/HRMS to meet the isotopic ratio criteria listed in Table 23–15 of this method.

13.9 Lock Channels. MS lock and quality control channels recommended in Tables 23–4, 23–5, and 23–6 of this method for PCDD/PCDFs, PCBs, or PAHs, respectively, must not vary >25 percent from the average response. You may use PFK or perfluorotributylamine (FC43) as your lock mass standard. You may choose lock masses within a SIM descriptor window that demonstrates the least interference. Monitor the quality control check channels specified in these tables to verify instrument stability during the analysis. Flag data resulting from failure to maintain lock channel signal or quality control check signal during analysis (QCF).

13.10 Initial Calibration.

13.10.1 The RSD for mean RRF from each of the target analytes and labeled standards in the calibration samples must not exceed the values in Table 23–14 of this method.

13.10.2 The S/N in every selected ion current profile must be ≥10 for all unlabeled targets and labeled standards in the calibration samples.

13.10.3 The ion abundance ratios must be within the control limits in Table 23–15 of this method.

13.11 Continuing Calibration.

13.11.1 The RRF for each unlabeled and labeled compound measured in a continuing calibration verification must not deviate from the initial calibration by more than the limits shown in Table 23–14 of this method.

13.11.2 The ion abundance ratios must be within the control limits in Table 23–15 of this method.

13.12 Compound Identification for PCDD/PCDFs and PCBs.

13.12.1 Target compounds must have ion abundance ratios within the control limits in Table 23–15 of this method. When the ion abundance ratio for a target analyte is outside the performance criteria, report the results as EPC (see Section 3.7 of this method). PAH target compounds have single ion identifiers with no ion abundance ratio requirement.

13.12.2 Report analysis results that do not meet the identification criteria as an EPC.

13.12.3 The Retention time (RT) for the analytes must be within 3 seconds of the corresponding labeled pre-extraction standard.

13.12.4 The monitored ions, shown in Table 23–4 of this method for a given PCDD/PCDF, must reach their maximum response within 2 seconds of each other.

13.12.5 The monitored ions, shown in Table 23–6 of this method for a given PCB, must reach their maximum response within 2 seconds of each other.

13.12.6 For the identification of specific PCB isomers, the retention time of the native congener must be within 0.006 RRT units of the pre-extraction standard RRT.

13.12.7 The chromatographic overlap of 2,3,4,7,8-PeCDF, 2,3,4,6,7,8-HxCDF, and 1,2,3,7,8,9-HxCDF peaks with interference peaks must not exceed 25 percent.

13.12.8 Identify and quantify isomers that do not have corresponding labeled pre-extraction standards by comparing to the pre-extraction labeled standard of the same compound class with the nearest RT to the target compound.

13.12.9 If chromatographic peaks are detected at the RT of any PCDD/PCDF in any of the m/z channels used to monitor chlorophenyl ethers, there is evidence of interference and positive bias. Data must be flagged to indicate an interference. You may report the total with bias for the affected target. To reduce the bias, you may use a confirmatory column or perform additional clean up on an archived sample followed by reanalysis.

13.13 Compound Identification for PAHs.

13.13.1 The signals for the characteristic ion listed in Table 23–5 of this method must be present.

13.13.2 The RRT between each native and labeled compound must be within 0.006 RRT units.

13.14 Filter, Adsorbent Resin, Glass Wool, Water and Laboratory Batch Blank Quality Control Check. Target levels must be ≤ three times the EDL of the method or 10 times lower than the quantitation limit required by the end use of the data, whichever is higher.

Note: You must analyze batch blank samples at least once during each analytical sequence or every 24 hours, whichever is shorter.

13.15 Pre-sampling Spike Recovery and Pre-extraction Filter Spike Recovery. Recoveries of all pre-sampling isotopically labeled spike compounds standards added to the sample and all pre-extraction filter recovery spike compounds added to the filter must be between 70 and 130 percent (Tables 23–7, 23–8, and 23–9 of this method).

13.15.1 If the recovery of the pre-sampling spike is below 70 percent, the sampling runs are not valid, and you must repeat the invalid runs. As an alternative, you do not have to repeat the invalid sampling runs if the average pre-sampling adsorbent spike recovery is 25 percent or more and you divide the final results by the average fraction of pre-sampling adsorbent spike recovery.

13.15.2 If the recovery of the pre-extraction filter spike is below 70 percent, the sampling recovery is not valid, and you must flag the test run results.

13.16 Pre-extraction Spike Recovery. Recoveries of all pre-extraction isotopically labeled spike compounds standards added to the sample must be between 20 to 130 percent for PCDD/PCDFs and PAHs (Tables 23–7 and 23–8 of this method) and between 20 to 145 percent for PCBs (Table 23–9 of this method).

13.17 Pre-analysis Spike Sensitivity. Response of all pre-analysis isotopically labeled spike compounds must show a S/N for every selected ion current profile of ≥10. Poor sensitivity compared to initial calibration response may indicate injection errors or instrument drift.

13.18 Requirements for Equivalency. The Administrator considers any modification of this method, beyond those expressly permitted in this method as options, to be a major modification subject to application and approval of alternative test procedures following EPA Guidance Document 22 currently found at: *https://www.epa.gov/emc/emc-guideline-documents.*

13.19 Records. As part of the laboratory's quality system, the laboratory must maintain records of modification to this method.

14.0 Pollution Prevention

The target compounds used as standards in this method are prepared in extremely small amounts and pose little threat to the environment when managed properly. Prepare standards in volumes consistent with laboratory use to minimize the disposal of excess volumes of expired standards.

15.0 Waste Management

15.1 The laboratory is responsible for complying with all federal, state, and local regulations governing waste management, particularly the hazardous waste identification rules and land disposal restrictions, and for protecting the air, water, and land by minimizing and controlling all releases from fume

hoods and bench operations. The laboratory must also comply with any sewage discharge permits and regulations. The EPA's *Environmental Management Guide for Small Laboratories* (EPA 233–B–98–001) provides an overview of requirements.

15.2 Samples containing hydrogen chloride or sulfuric acid to pH <2 are hazardous and must be neutralized before being poured down a drain or must be handled as hazardous waste.

15.3 For further information on waste management, consult *The Waste Management Manual for Laboratory Personnel* and *Less is Better-Laboratory Chemical Management for Waste Reduction,* available from the American Chemical Society's Department of Government Relations and Science Policy, 1155 16th Street NW, Washington, DC 20036.

16.0 Bibliography

1. American Society of Mechanical Engineers. Analytical Procedures to Assay Stack Effluent Samples and Residual Combustion Products for Polychlorinated Dibenzo-p-Dioxins (PCDD) and Polychlorinated Dibenzofurans (PCDF). Prepared for the U.S. Department of Energy and U.S. Environmental Protection Agency. Washington, DC. December 1984. 23 p.

2. American Society of Mechanical Engineers. Sampling for the Determination of Chlorinated Organic Compounds in Stack Emissions. Prepared for U.S. Department of Energy and U.S. Environmental Protection Agency. Washington DC. December 1984. 25 p.

3. Fishman, V.N., Martin, G.D. and Lamparski, L.L., Comparison of a variety of gas chromatographic columns with different polarities for the separation of chlorinated dibenzo-p-dioxins and dibenzofurans by high-resolution mass spectrometry, Journal of Chromatography A 1139 (2007) 285–300.

4. International Agency for Research on Cancer. Environmental Carcinogens Methods of Analysis and Exposure Measurement, Volume 11—Polychlorinated Dioxins and Dibenzofurans. IARC Scientific Publications No. 108, 1991.

5. Stieglitz, L., Zwick, G., Roth, W. Investigation of different treatment techniques for PCDD/PCDF in fly ash. Chemosphere 15: 1135–1140; 1986.

6. Triangle Laboratories. Case Study: Analysis of Samples for the Presence of Tetra Through Octachloro-p-Dibenzodioxins and Dibenzofurans. Research Triangle Park, NC. 1988. 26 p.

7. U.S. Environmental Protection Agency. Method 8290—The Analysis of Polychlorinated Dibenzo-p-dioxin and Polychlorinated Dibenzofurans by High-Resolution Gas Chromatography/High-Resolution Mass Spectrometry. In: Test Methods for Evaluating Solid Waste. Washington, DC. SW–846.

8. U.S. Environmental Protection Agency. Office of Air Programs Publication No. APTD–0576: Maintenance, Calibration, and Operation of Isokinetic Source Sampling Equipment. Research Triangle Park, NC. March 1972.

9. U.S. Environmental Protection Agency. Method 1625C-Semivolatile Organic Compounds by Isotope Dilution GCMS.

10. U.S. Environmental Protection Agency. Method 1613B-Tetra- through Octa-Chlorinated Dioxins and Furans by Isotope Dilution HRGC/HRMS.

11. U.S. Environmental Protection Agency. Method 1668C-Chlorinated Biphenyl Congeners in Water, Soil, Sediment, Biosolids, and Tissue by HRGC/HRMS.12. Tondeur, Y., Nestrick, T., Silva, Héctor A., Vining, B., Hart, J. Analytical procedures for the determination of polychlorinated-p-dioxins, polychlorinated dibenzofurans, and hexachlorobenzene in pentachlorophenol, Chemosphere Volume 80, Issue 2, June 2010 pages 157–164.

17.0 Tables, Diagrams, Flowcharts, and Validation Data

TABLE 23–1—POLYCHLORINATED DIBENZO-P-DIOXIN AND POLYCHLORINATED DIBENZOFURAN TARGET ANALYTES

Polychlorinated dibenzo-p-dioxins	CAS [a] registry number	Poly-chlorinated dibenzofurans	CAS [a] registry No.
2,3,7,8-TeCDD	1746–01–6	2,3,7,8-TeCDF.	51207–31–9
1,2,3,7,8-PeCDD	40321–76–4	1,2,3,7,8-PeCDF.	57117–41–6
1,2,3,4,7,8-HxCDD	39227–28–6	2,3,4,7,8-PeCDF.	57117–31–4
1,2,3,6,7,8-HxCDD	57653–85–7	1,2,3,4,7,8-HxCDF.	70648–26–9
1,2,3,7,8,9-HxCDD	19408–74–3	1,2,3,6,7,8-HxCDF.	57117–44–9
1,2,3,4,6,7,8-HpCDD	35822–46–9	1,2,3,7,8,9-HxCDF.	72918–21–9
Total TeCDD	41903–57–5	2,3,4,6,7,8-HxCDF.	60851–34–5
Total PeCDD	36088–22–9	1,2,3,4,6,7,8-HpCDF.	67562–39–4
Total HxCDD	34465–4608	1,2,3,4,7,8,9-HpCDF.	55673–89–7
Total HpCDD	37871–00–4	Total TeCDF	55722–27–5
Total OCDD	3268–87–9	Total PeCDF	30402–15–4
		Total HxCDF	55684–94–1
		Total HpCDF	38998–75–3
		Total OCDF ..	39001–02–0

[a] Chemical Abstract Service.

TABLE 23–2—POLYCYCLIC AROMATIC HYDROCARBON TARGET ANALYTES

Polycyclic aromatic hydrocarbons	CAS [a] registry No.	Polycyclic aromatic hydrocarbons	CAS [a] registry No.
Naphthalene	91–20–3	Chrysene	218–01–9
2-Methylnapthalene	91–57–6	Benzo[*b*]fluoranthene	205–99–2
Acenaphthylene	208–96–8	Benzo[*k*]fluoranthene	207–08–9
Acenaphthene	83–32–9	Perylene	198–55–8
Fluorene	86–73–7	Benzo[*a*]pyrene	50–32–8
Anthracene	120–12–7	Benzo[*e*]pyrene	192–92–2
Phenanthrene	85–01–8	Benzo[*g,h,i*]perylene	191–24–2
Fluoranthene	206–44–0	Indeno[*1,2,3-cd*]pyrene	193–39–5
Pyrene	129–00–0	Dibenz[*a,h*]anthracene	53–70–3
Benzo[*a*]anthracene	56–55–3		

[a] Chemical Abstract Service.

TABLE 23–3—POLYCHLORINATED BIPHENYL TARGET ANALYTES

PCB congener	BZ No.[a]	CAS[b] Registry No.	PCB congener	BZ No.[a]	CAS [b] Registry No.
2,4′-DiCB	8	34883–43–7	2,2′,3,3′,4,4′-HxCB	128	38380–07–3
2,2′,5-TrCB	18	37680–65–2	2,2′,3,4,4′,5′-HxCB	138	35065–28–2
2,4,4′-TrCB	28	7012–37–5	2,2′,4,4′,5,5′-HxCB	153	35065–27–1
2,2′,3,5′-TeCB	44	41464–39–5	2,3,3′,4,4′,5-HxCB	156	38380–08–4
2,2′,5,5′-TeCB	52	35693–99–3	2,3,3′,4,4′,5′-HxCB	157	69782–90–7
2,3′,4,4′-TeCB	66	32598–10–0	2,3′,4,4′,5,5′-HxCB	167	52663–72–6
3,3′,4,4′-TeCB	77	32598–13–3	3,3′,4,4′,5,5′-HxCB	169	32774–16–6
3,4,4′,5-TeCB	81	70362–50–4	2,2′,3,3′,4,4′,5-HpCB	170	35065–30–6
2,2′,4,5,5′-PeCB	101	37680–73–2	2,2′,3,4,4′,5,5′-HpCB	180	35065–29–3
2,3,3′,4,4′-PeCB	105	32598–14–4	2,2′,3,4′,5,5′,6-HpCB	187	52663–68–0
2,3,4,4′,5-PeCB	114	74472–37–0	2,3,3′,4,4′,5,5′-HpCB	189	39635–31–9
2,3′,4,4′,5-PeCB	118	31508–00–6	2,2′,3,3′,4,4′,5,6-OcCB	195	52663–78–2
2′,3,4,4′,5-PeCB	123	65510–44–3	2,2′,3,3′,4,4′,5,5′,6-NoCB	206	40186–72–9
3,3′,4,4′,5-PeCB	126	57465–28–8	2,2′,3,3′,4,4′,5,5′,6,6′-DeCB	209	2051–24–3

[a] BZ No.: Ballschmiter and Zell 1980, or International Union of Pure and Applied Chemistry (IUPAC) number.
[b] Chemical Abstract Service.

TABLE 23–4—ELEMENTAL COMPOSITIONS AND EXACT MASSES OF THE IONS MONITORED BY HIGH-RESOLUTION MASS SPECTROMETRY FOR PCDDS AND PCDFS

Mass [a]	Ion type [b]	Elemental composition	Target analyte [b]	Mass [a]	Ion type[b]	Elemental composition	Target analyte [b]
263.9871	LOCK	$C_5F_{10}N$	FC43	383.8639	M	$^{13}C_{12}H_2{}^{35}Cl_6O$	HxCDF (S).
292.9825	LOCK	C_7F_{11}	PFK	385.8610	M+2	$^{13}C_{12}H_2{}^{35}Cl_5{}^{37}ClO$	HxCDF (S).
303.9016	M	$C_{12}H_4{}^{35}Cl_4O$	TeCDF	389.8157	M+2	$C_{12}H_2{}^{35}Cl_5{}^{37}ClO_2$	HxCDD.
305.8987	M+2	$C_{12}H_4{}^{35}Cl^{37}O$	TeCDF	391.8127	M+4	$C_{12}H_2{}^{35}Cl_4{}^{37}Cl_2O_2$	HxCDD.
313.9839	QC	$C_6F_{12}N$	FC43	392.9760	LOCK	C_9F_{15}	PFK.
315.9419	M	$^{13}C_{12}H_4{}^{35}Cl_4O$	TeCDF (S)	401.8559	M+2	$^{13}C_{12}H_2{}^{35}Cl_5{}^{37}ClO_2$	HxCDD (S).
316.9745	M+2	$^{13}C_{12}H_4{}^{35}Cl_4O$	TeCDF (S)	403.8529	M+4	$^{13}C_{12}H_2{}^{35}Cl_4{}^{37}Cl_2O$	HxCDD (S).
317.9389	M+2	$^{13}C_{12}H_4{}^{35}Cl_3{}^{37}ClO$	TeCDF (S)	425.9775	QC	$C_9F_{16}N$	FC43.
319.8965	M	$C_{12}H_4{}^{35}ClO_2$	TeCDD	445.7555	M+4	$C_{12}H_2{}^{35}Cl_6{}^{37}Cl_2O$	OCDPE.
321.8936	M+2	$C_{12}H_4{}^{35}Cl_3{}^{37}ClO_2$	TeCDD	407.7818	M+2	$C_{12}H^{35}Cl_6{}^{37}ClO$	HpCDF.
325.9839	QC	$C_7F_{12}N$	FC43	409.7789	M+4	$C_{12}H^{35}Cl_5{}^{37}Cl_2O$	HpCDF.
327.8847	M	$C_{12}H_4{}^{37}Cl_4O_2$	TeCDD (S)	417.8253	M	$^{13}C_{12}H^{35}Cl_7O$	HpCDF (S).
330.9792	QC	C_7F_{13}	PFK	419.8220	M+2	$^{13}C_{12}H^{35}Cl_6{}^{37}ClO$	HpCDF (S).
331.9368	M	$^{13}C_{12}H_4{}^{35}Cl_4O_2$	TeCDD (S)	423.7766	M+2	$C_{12}H^{35}Cl_6{}^{37}ClO_2$	HpCDD.
333.9339	M+2	$^{13}C_{12}H_4{}^{35}Cl^{37}ClO_2$	TeCDD (S)	425.7737	M+4	$C_{12}H^{35}Cl_5{}^{37}Cl_2O_2$	HpCDD.
339.8597	M+2	$C_{12}H_3{}^{35}Cl_4{}^{37}ClO$	PeCDF	430.9729	QC	C_9F_{17}	PFK.
341.8567	M+4	$C_{12}H_3{}^{35}Cl_3{}^{37}Cl_2O$	PeCDF	435.8169	M+2	$^{13}C_{12}H^{35}Cl_6{}^{37}ClO_2$	HpCDD (S).
354.9792	LOCK	C_9F_{13}	PFK	437.8140	M+4	$^{13}C_{12}H^{35}Cl_5{}^{37}Cl_2O_2$	HpCDD (S).
351.9000	M+2	$^{13}C_{12}H_3{}^{35}Cl_4{}^{37}ClO$	PeCDF (S)	442.9728	LOCK	$C_{10}F_{17}$	PFK.
353.8970	M+4	$^{13}C_{12}H_3{}^{35}Cl^{3537}Cl_2O$	PeCDF (S)	479.7165	M+4	$C_{12}H^{35}Cl_7{}^{37}Cl_2O$	NCPDE.
355.8546	M+2	$C_{12}H_3{}^{35}Cl_3{}^{37}ClO_2$	PeCDD	430.9729	LOCK	C_9F_{17}	PFK.
357.8516	M+4	$C_{12}H_3{}^{35}Cl_3{}^{37}Cl_2O_2$	PeCDD	441.7428	M+2	$C_{12}{}^{35}Cl_7{}^{37}ClO$	OCDF.
367.8949	M+2	$^{13}C_{12}H_3{}^{35}Cl_4{}^{37}ClO_2$	PeCDD (S)	443.7399	M+4	$C_{12}{}^{35}Cl_6{}^{37}Cl_2O$	OCDF.
369.8919	M+4	$^{13}C_{12}H_3{}^{35}Cl_3{}^{37}Cl_2O_2$	PeCDD (S)	457.7377	M+2	$C_{12}{}^{35}Cl_7{}^{37}ClO_2$	OCDD.
375.9807	QC	$C_8F_{14}N$	FC43	459.7348	M+4	$C_{12}{}^{35}Cl_6{}^{37}Cl_2O_2$	OCDD.
375.8364	M+2	$C_{12}H_4{}^{35}Cl_5{}^{37}ClO$	HxCDPE	463.9743	QC	$C_9F_{18}N$	FC43.
409.7974	M+2	$C_{12}H_3{}^{35}Cl_6{}^{37}ClO$	HpCPDE	469.7779	M+2	$^{13}C_{12}{}^{35}Cl_7{}^{37}ClO_2$	OCDD (S).
373.8208	M+2	$C_{12}H_2 35Cl_5{}^{37}ClO$	HxCDF	471.7750	M+4	$^{13}C_{12}{}^{35}Cl_6{}^{37}Cl_2O_2$	OCDD (S).
375.8178	M+4	$C_{12}H_2{}^{35}Cl_4{}^{37}Cl_2O$	HxCDF	513.6775	M+4	$C_{12}{}^{35}Cl_8{}^{37}Cl_2O_2$	DCDPE.
375.9807	QC	$C_8F_{14}N$	FC43	442.9728	QC	$C_{10}F_{17}$	PFK.

[a] The following nuclidic masses were used to calculate exact masses: H = 1.007825, C = 12.000000, ^{13}C = 13.003355, F = 18.9984, O = 15.994915, ^{35}Cl = 34.968853, ^{37}Cl = 36.965903.
[b] (S) = Labeled Standard. QC = Ion selected for monitoring instrument stability during the HRGC/HRMS analysis.

TABLE 23–5—ELEMENTAL COMPOSITIONS AND EXACT MASSES OF THE IONS MONITORED BY HIGH-RESOLUTION MASS SPECTROMETRY FOR PAHS

Aromatic ring No.	Mass [a]	Ion type [b]	Elemental composition	Target analyte
2	128.0624	M	$C1_0H_8$	Naphthalene.
	130.9920	LOCK		PFK/FC43.
2	134.0828	M	$^{13}C_6{}^{12}C_4H_8$	$^{13}C_6$-Naphthalene.
2	142.078	M	$C_{11}H_{10}$	2-Methylnaphthalene.
2	148.0984	M	$^{13}C_6{}^{12}C_5H_{10}$	$^{13}C_6$-2-Methylnaphthalene.
2	152.0624	M	$C_{12}H_8$	Acenaphthylene.
2	158.0828	M	$^{13}C_6{}^{12}C_6H_8$	$^{13}C_6$-Acenaphthylene.
2	154.078	M	$C_{12}H_{10}$	Acenaphthene.
2	160.078	M	$^{13}C_6{}^{12}C_6H_{10}$	$^{13}C_6$-Acenaphthene.
2	166.078	M	$C_{13}H_{10}$	Fluorene.
	169.988	QC		PFK/FC43.
2	172.0984	M	$^{13}C_6{}^{12}C_7H$	$^{13}C_6$-Fluorene.
3	178.078	M	$C_{14}H_{10}$	Phenanthrene.
3	184.0984	M	$^{13}C_6\ {}^{12}C_8H_{10}$	$^{13}C_6$-Phenanthrene.
3	178.078	M	$C_{14}H_{10}$	Anthracene.
3	184.078	M	$^{13}C_6{}^{12}C_8H_{10}$	$^{13}C_6$-Anthracene.
3	202.078	M	$C_{16}H_{10}$	Fluoranthene.
	204.9888	QC		PFK.
3	208.0984	M	$^{13}C_6{}^{12}C_{10}H_{10}$	$^{13}C_6$-Fluoranthene.
4	202.078	M	$C_{16}H_{10}$	Pyrene.
4	205.078	M	$^{13}C_3{}^{12}C_{13}H_{10}$	$^{13}C_3$-Pyrene.
	213.9898	QC		FC43.
	218.9856	LOCK		FC43.
4	228.0936	M	$C_{18}H_{12}$	Benzo[*a*]anthracene.
	230.9856	LOCK		PFK.
4	234.114	M	$^{13}C_6C_{12}H_{12}$	$^{13}C_6$-Benzo[*a*]anthracene.
4	228.0936	M	$C_{18}H_{12}$	Chrysene.
4	234.114	M	$^{13}C_6{}^{12}C_{12}H_{12}$	$^{13}C_6$-Chrysene.
4	252.0936	M	$C_{20}H_{12}$	Benzo[*b*]fluoranthene.
4	258.114	M	$^{13}C_6{}^{12}C_{14}H_{12}$	$^{13}C_6$-Benzo[*b*]fluoranthene.
4	252.32	M	$C_{20}H_{12}$	Benzo[*k*]fluoranthene.
4	258.114	M	$^{13}C_6{}^{12}7C_{14}H_{12}$	$^{13}C_6$-Benzo[*k*]fluoranthene.
5	252.0936	M	$C_{20}H_{12}$	Benzo[*e*]pyrene.
5	256.1072	M	$^{13}C_4{}^{12}C_{16}H_{12}$	$^{13}C_4$-Benzo[*e*]pyrene.
5	256.1072	M	$^{13}C_4{}^{12}C_{16}H_{12}$	$^{13}C_4$-Benzo[*a*]pyrene.
5	252.0936	M	$C_{20}H_{12}$	Benzo[*a*]pyrene.
5	252.0936	M	$C_{20}H_{12}$	Perylene.
5	264.1692	M	$C_{20}D_{12}$	d_{12}-Perylene.
	268.9824	QC		PFK.
	263.9871	LOCK		FC43.
6	276.0936	M	$C_{22}H_{12}$	Indeno[*1,2,3-cd*]pyrene.
6	282.114	M	$^{13}C_6{}^{12}C_{16}H_{12}$	$^{13}C_6$-Indeno[*1,2,3,cd*]pyrene.
5	278.1092	M	$C_{22}H_{14}$	Dibenz[*a,h*]anthracene.
	280.9824	LOCK		PFK.
5	284.1296	M	$^{13}C_6{}^{12}C_{16}H_{14}$	$^{13}C_6$-Dibenz[*a,h*]anthracene.
6	276.0936	M	$C_{22}H_{12}$	Benzo[*g,h,i*]perylene.
6	288.1344	M	$^{13}C_{12}{}^{12}C_{10}H_{12}$	$^{13}C_{12}$-Benzo[*g,h,i*]perylene.
	313.9839	QC		FC43.

[a] Isotopic masses used for accurate mass calculation: ^{1}H = 1.0078, ^{12}C = 12.0000, ^{13}C = 13.0034, ^{2}H = 2.0141.
[b] LOCK = Lock-Mass Ion PFK or FC43. QC = Quality Control Check Ion.

TABLE 23–6—ELEMENTAL COMPOSITIONS AND EXACT MASSES OF THE IONS MONITORED BY HIGH-RESOLUTION MASS SPECTROMETRY FOR PCBS

Chlorine substitution	Mass [a]	Ion type [b]	Elemental composition	Target analyte
Fn-1; Cl-1	188.0393	M	$^{12}C_{12}H_9{}^{35}Cl$	Cl-1 PCB
	190.0363	M+2	$^{12}C_{12}H_9{}^{37}Cl$	Cl-1P CB
	200.0795	M	$^{13}C_{12}H_9{}^{35}Cl$	$^{13}C_{12}$Cl-1 PCB
	202.0766	M+2	$^{12}C_{12}H_9{}^{37}Cl$	$^{13}C_{12}$Cl-1 PCB
	218.9856	LOCK	C_4F_9	PFK
Fn-2; Cl-2,3	222.0003	M	$^{12}C_{12}H_8{}^{35}C_{l2}$	Cl-2 PCB
	223.9974	M+2	$^{12}C_{12}H_8{}^{35}Cl_{37}$ Cl	Cl-2 PCB
	225.9944	M+4	$^{12}C_{12}H_8{}^{37}Cl_2$	Cl-2 PCB
	234.0406	M	$^{13}C_{12}H_8{}^{35}Cl_2$	$^{13}C_{12}$Cl-2 PCB
	236.0376	M+2	$^{13}C_{12}H_8{}^{35}$ $Cl_{37}Cl$	$^{13}C_{12}$Cl-2 PCB
	242.9856	C4 F9	C_4 F_9	PFK
	255.9613	M	$^{12}C_{12}H_7{}^{35}C_{l3}$	Cl-3 PCB
	257.9584	M+2	$^{12}C_{12}H_7{}^{35}C_{l2}{}^{37}Cl$	Cl-3 PCB
	268.0016	M	$^{13}C_{12}H_7{}^{35}Cl_3$	$^{13}C_{12}$ Cl-3 PCB
	269.9986	M+2	$^{13}C_{12}H_7{}^{35}Cl_2$ ^{37}Cl	$^{13}C_{12}$ Cl-3 PCB
Fn-3; Cl-3,4,5	255.9613	M	$^{12}C_{12}H_7{}^{35}Cl_3$	Cl-3 PCB
	257.9584	M+2	$^{12}C_{12}H_7{}^{35}Cl_2$ ^{37}Cl	Cl-3 PCB
	259.9554	M+4	$^{12}C_{12}H_7{}^{35}Cl^{37}Cl_2$	Cl-3 PCB
	268.0016	M	$^{13}C_{12}H_7{}^{35}Cl_3$	$^{13}C_{12}$ Cl-3 PCB
	269.9986	M+2	$^{13}C_{12}H_7{}^{35}Cl_2$	$^{13}C_{12}$ Cl-3 PCB
	280.9825	LOCK	C_6F_{11}	PFK
	289.9224	M	$^{12}C_{12}H_6{}^{35}Cl_4$	Cl-4 PCB
	291.9194	M+2	$^{12}C_{12}H_6{}^{35}Cl_3{}^{37}Cl$	Cl-4 PCB

TABLE 23–6—ELEMENTAL COMPOSITIONS AND EXACT MASSES OF THE IONS MONITORED BY HIGH-RESOLUTION MASS SPECTROMETRY FOR PCBS—Continued

Chlorine substitution	Mass [a]	Ion type [b]	Elemental composition	Target analyte
	293.9165	M+4	$^{12}C_{12}H_6{}^{35}Cl_2\ {}^{37}Cl_2$	Cl-4 PCB
	301.9626	M	$^{13}C_{12}H_6{}^{35}Cl_4$	$^{13}C_{12}$Cl-4 PCB
	303.9597	M+2	$^{13}C_{12}H_6{}^{35}Cl_3\ {}^{37}Cl$	$^{13}C_{12}$Cl-4 PCB
	323.8834	M	$^{12}C_{12}H_5{}^{35}Cl_5$	Cl-5 PCB
	325.8804	M+2	$^{12}C_{12}H_5{}^{35}Cl_4\ {}^{37}Cl$	Cl-5 PCB
	327.8775	M+4	$^{12}C_{12}H_5{}^{35}Cl_3\ {}^{37}Cl_2$	Cl-5 PCB
	337.9207	M+2	$^{13}C_{12}H_5{}^{35}Cl_4\ {}^{37}Cl$	$^{13}C_{12}$Cl-5 PCB
	339.9178	M+4	$^{13}C_{12}H_5{}^{35}Cl_3\ {}^{37}Cl_2$	$^{13}C_{12}$Cl-5 PCB
Fn-4; Cl-4,5,6	289.9224	M	$^{12}C_{12}H_6{}^{35}Cl_4$	Cl-4 PCB
	291.9194	M+2	$^{12}C_{12}H_6{}^{35}Cl_3\ {}^{37}Cl$	Cl-4 PCB
	293.9165	M+4	$^{12}C_{12}H_6{}^{35}Cl_2\ {}^{37}Cl_2$	Cl-4 PCB
	301.9626	M+2	$^{13}C_{12}H_6{}^{35}Cl_3\ {}^{37}Cl$	$^{13}C_{12}$Cl-4 PCB
	303.9597	M+4	$^{13}C_{12}H_6{}^{35}C_{l2}\ {}^{37}Cl_2$	$^{13}C_{12}$Cl-4 PCB
	323.8834	M	$^{12}C_{12}H_5{}^{35}Cl_5$	Cl-5 PCB
	325.8804	M+2	$^{12}C_{12}H_5{}^{35}Cl_4\ {}^{37}Cl$	Cl-5 PCB
	327.8775	M+4	$^{12}C_{12}H_5\ {}^{35}Cl_3\ {}^{37}Cl_2$	Cl-5 PCB
	330.9792	LOCK	C_7F_{15}	PFK
	337.9207	M+2	$^{13}C_{12}H_5{}^{35}Cl_4\ {}^{37}Cl$	$^{13}C_{12}$Cl-5 PCB
	339.9178	M+4	$^{13}C_{12}H_5{}^{35}Cl_3\ {}^{37}Cl_2$	$^{13}C_{12}$Cl-5 PCB
	359.8415	M+2	$^{13}C_{12}H_4{}^{35}Cl_5$	^{37}Cl Cl-6 PCB
	361.8385	M+4	$^{13}C_{12}H_4{}^{35}Cl_4\ {}^{37}Cl_2$	Cl-6 PCB
	363.8356	M+6	$^{12}C_{12}H_4{}^{35}Cl_3\ {}^{37}Cl_3$	Cl-6 PCB
	371.8817	M+2	$^{13}C_{12}H_4{}^{35}Cl_5\ {}^{37}Cl$	$^{13}C_{12}$Cl-6 PCB
	373.8788	M+4	$^{13}C_{12}H_4{}^{35}Cl_4\ {}^{37}Cl_2$	$^{13}C_{12}$Cl-6 PCB
Fn-5; Cl-5,6,7	323.8834	M	$^{12}C_{12}H_5{}^{35}Cl_5$	Cl-5 PCB
	325.8804	M+2	$^{12}C_{12}H_5{}^{35}Cl_4\ {}^{37}Cl$	Cl-5 PCB
	327.8775	M+4	$^{12}C_{12}H_5{}^{35}Cl_3\ {}^{37}Cl_2$	Cl-5 PCB
	337.9207	M+2	$^{13}C_{12}H_5{}^{35}Cl_4\ {}^{37}Cl$	$^{13}C_{12}$Cl-5 PCB
	339.9178	M+4	$^{13}C_{12}H_5{}^{35}Cl_3\ {}^{37}Cl_2$	$^{13}C_{12}$Cl-5 PCB
	354.9792	LOCK	C_9F_{13}	PFK
	359.8415	M+2	$^{12}C_{12}H_4{}^{35}Cl_5\ {}^{37}Cl$	Cl-6 PCB
	361.8385	M+4	$^{12}C_{12}H_4{}^{35}Cl_4\ {}^{37}Cl_2$	Cl-6 PCB
	363.8356	M+6	$^{12}C_{12}H_4{}^{35}Cl_3\ {}^{37}Cl_3$	Cl-6 PCB
	371.8817	M+2	$^{13}C_{12}H_4{}^{35}Cl_5\ {}^{37}Cl$	$^{13}C_{12}$Cl-6 PCB
	373.8788	M+4	$^{13}C_{12}H_4{}^{35}Cl_4\ {}^{37}Cl_2$	$^{13}C_{12}$Cl-6 PCB
	393.8025	M+2	$^{12}C_{12}H_3{}^{35}Cl_6\ {}^{37}Cl$	Cl-7 PCB
	395.7995	M+4	$^{12}C_{12}H_3{}^{35}Cl_5\ {}^{37}Cl_2$	Cl-7 PCB
	397.7966	M+6	$^{12}C_{12}H_3{}^{35}Cl_4$	$^{37}Cl_3$ Cl-7 PCB
	405.8428	M+2	$^{13}C_{12}H_3{}^{35}Cl_6\ {}^{37}Cl$	$^{13}C_{12}$Cl-7 PCB
	407.8398	M+4	$^{13}C_{12}H_3{}^{35}Cl_5\ {}^{37}Cl_2$	$^{13}C_{12}$Cl-7 PCB
	454.9728	QC	$C_{11}F_{17}$	PFK
Fn-6; Cl-7,8,9,10	393.8025	M+2	$^{12}C_{12}H_3{}^{35}Cl_6\ {}^{37}Cl$	Cl-7 PCB
	395.7995	M+4	$^{12}C_{12}H_3{}^{35}Cl_5\ {}^{37}Cl_2$	Cl-7 PCB
	397.7966	M+6	$^{12}C_{12}H_3{}^{35}Cl_4$	$^{37}Cl_3$ Cl-7 PCB
	405.8428	M+2	$^{13}C_{12}H_3{}^{35}Cl_6\ {}^{37}Cl$	$^{13}C_{12}$Cl-7 PCB
	407.8398	M+4	$^{13}C_{12}H_3{}^{35}Cl_5\ {}^{37}Cl_2$	$^{13}C_{12}$Cl-7 PCB
	427.7635	M+2	$^{12}C_{12}H_2{}^{35}Cl_7\ {}^{37}Cl$	Cl-8 PCB
	429.7606	M+4	$^{12}C_{12}H_2{}^{35}Cl_6\ {}^{37}Cl_2$	Cl-8 PCB
	431.7576	M+6	$^{12}C_{12}H_2{}^{35}Cl_5\ {}^{37}Cl_3$	Cl-8 PCB
	439.8038	M+2	$^{13}C_{12}H_2{}^{35}Cl_7\ {}^{37}Cl$	$^{13}C_{12}$Cl-8 PCB
	441.8008	M+4	$^{13}C_{12}H_2{}^{35}Cl_6\ {}^{37}Cl_2$	$^{13}C_{12}$Cl-8 PCB
	454.9728	QC	$C_{11}F_{17}$	PFK
	427.7635	M+2	$^{12}C_{12}H_2{}^{35}Cl_7\ {}^{37}Cl$	Cl-8 PCB
	429.7606	M+4	$^{12}C_{12}H_2{}^{35}Cl_6\ {}^{37}Cl_2$	Cl-8 PCB
	431.7576	M+6	$^{12}C_{12}H_2{}^{35}Cl_5\ {}^{37}Cl_3$	Cl-8 PCB
	439.8038	M+2	$^{13}C_{12}H_2{}^{35}Cl_7\ {}^{37}Cl$	$^{13}C_{12}$Cl-8 PCB
	441.8008	M+4	$^{13}C_{12}H_2{}^{35}Cl_6\ {}^{37}Cl_2$	$^{13}C_{12}$Cl-8 PCB
	442.9728	QC	$C_{10}F_{17}$	PFK
	454.9728	LOCK	$C_{11}F_{17}$	PFK
	461.7246	M+2	$^{12}C_{12}H_1{}^{35}Cl_8\ {}^{37}Cl$	Cl-9 PCB
	463.7216	M+4	$^{12}C_{12}H_1{}^{35}Cl_7\ {}^{37}Cl_2$	Cl-9 PCB
	465.7187	M+6	$^{12}C_{12}H_1{}^{35}Cl_6\ {}^{37}Cl_3$	Cl-9 PCB
	473.7648	M+2	$^{13}C_{12}H_1{}^{35}Cl_8\ {}^{37}Cl$	$^{13}C_{12}$Cl-9 PCB
	475.7619	M+4	$^{13}C_{12}H_1{}^{35}Cl_7\ {}^{37}Cl_2$	$^{13}C_{12}$Cl-9 PCB
	495.6856	M+2	$^{13}C_{12}H_4{}^{35}Cl_9\ {}^{37}Cl$	Cl-10 PCB
	499.6797	M+4	$^{12}C_{12}{}^{35}Cl_7{}^{37}Cl_3$	Cl-10 PCB
	501.6767	M+6	$^{12}C_{12}{}^{35}Cl_6{}^{37}Cl_4$	Cl-10 PCB
	507.7258	M+2	$^{13}C_{12}H_4{}^{35}Cl_9\ {}^{37}Cl$	$^{13}C_{12}$Cl-10 PCB
	509.7229	M+4	$^{13}C_{12}H_4{}^{35}Cl_8\ {}^{37}Cl_2$	$^{13}C_{12}$Cl-10 PCB
	511.7199	M+6	$^{13}C_{12}H_4{}^{35}Cl_8\ {}^{37}Cl_4$	$^{13}C_{12}$Cl-10 PCB

[a] Isotopic masses used for accurate mass calculation: ^{1}H = 1.0078, ^{12}C = 12.0000, ^{13}C = 13.0034, ^{35}Cl = 34.9689, ^{37}Cl = 36.9659, ^{19}F = 18.9984. An interference with PFK m/z 223.9872 may preclude meeting 10:1 S/N for the DiCB congeners at optional Calibration Level 1 (Table 23–12). If this interference occurs, 10:1 S/N must be met at the Calibration Level 2.

[b] LOCK = Lock-Mass Ion PFK or FC43. QC = Quality Control Check Ion.

TABLE 23–7—COMPOSITION OF THE SAMPLE FORTIFICATION AND RECOVERY STANDARD SOLUTIONS FOR PCDDS AND PCDFS [a]

Compound	Amount (pg/μL of final extract) [b]	Spike recovery (percent)
Pre-sampling Adsorbent Standards		
$^{13}C_{12}$-1,2,3,4-TeCDD	50	70–130
$^{13}C_{12}$-1,2,3,4,7-PeCDD	50	70–130
$^{13}C_{12}$-1,2,3,4,6-PeCDF	50	70–130
$^{13}C_{12}$-1,2,3,4,6,9-HxCDF	50	70–130
$^{13}C_{12}$-1,2,3,4,6,8,9-HpCDF	50	70–130
Pre-extraction Filter Recovery Spike Standards		
$^{13}C_{12}$-1,2,7,8-TeCDF	100	70–130
$^{13}C_{12}$-1,2,3,4,6,8-HxCDD	100	70–130
Pre-extraction Standards		
$^{13}C_{12}$-2,3,7,8-TeCDD	100	20–130
$^{13}C_{12}$-2,3,7,8-TeCDF	100	20–130
$^{13}C_{12}$-1,2,3,7,8-PeCDD	100	20–130
$^{13}C_{12}$-1,2,3,7,8-PeCDF	100	20–130
$^{13}C_{12}$-2,3,4,7,8-PeCDF	100	20–130
$^{13}C_{12}$-1,2,3,4,7,8-HxCDD	100	20–130
$^{13}C_{12}$-1,2,3,6,7,8-HxCDD	100	20–130
$^{13}C_{12}$-1,2,3,7,8,9-HxCDD	100	20–130
$^{13}C_{12}$-1,2,3,4,7,8-HxCDF	100	20–130
$^{13}C_{12}$-1,2,3,6,7,8-HxCDF	100	20–130
$^{13}C_{12}$-2,3,4,6,7,8-HxCDF	100	20–130
$^{13}C_{12}$-1,2,3,7,8,9-HxCDF	100	20–130
$^{13}C_{12}$-1,2,3,4,6,7,8-HpCDD	100	20–130
$^{13}C_{12}$-1,2,3,4,6,7,8-HpCDF	100	20–130
$^{13}C_{12}$-1,2,3,4,7,8,9-HpCDF	100	20–130
$^{13}C_{12}$-OCDD	200	20–130
$^{13}C_{12}$-OCDF	200	20–130
Pre-analysis Standards		
$^{13}C_{12}$-1,3,6,8-TeCDD	100	S/N≥10
$^{13}C_{12}$-1,2,3,4-TeCDF	100	S/N≥10
$^{13}C_{12}$-1,2,3,4,6,7-HxCDD	100	S/N≥10
$^{13}C_{12}$-1,2,3,4,6,7,9-HpCDD	100	S/N≥10
Alternate Recovery Standards		
$^{13}C_{12}$-1,3,7,8-TeCDD	100	20–130
$^{13}C_{12}$-1,2,4,7,8-PeCDD	100	20–130

[a] Changes in the amounts of spike standards added to the sample or its representative extract will necessitate an adjustment of the calibration solutions to prevent the introduction of inconsistencies. Spike concentration assumes 1μL sample injection volume for analysis.
[b] Spike levels assume half of the extract will be archived before cleanup. Spike levels may be adjusted for different split levels.

TABLE 23–8—COMPOSITION OF THE SAMPLE FORTIFICATION AND RECOVERY STANDARD SOLUTIONS FOR PAHS [a]

Compound	Amount (pg/μL of final extract) [b]	Spike recovery (percent)
Pre-sampling Adsorbent Standards		
$^{13}C_6$-Benzo[*c*]fluorene	100	70–130
$^{13}C_{12}$-Benzo[*j*]fluoranthene	100	70–130
Pre-extraction Filter Recovery Spike Standards		
d_{10}-Anthracene	100	70–130
Pre-extraction Standards		
$^{13}C_6$-Naphthalene	100	20–130
$^{13}C_6$-2-Methylnaphthalene	100	20–130
$^{13}C_6$-Acenaphthylene	100	20–130
$^{13}C_6$-Acenaphthene	100	20–130
$^{13}C_6$-Fluorene	100	20–130
$^{13}C_6$-Phenanthrene	100	20–130
$^{13}C_6$-Anthracene	100	20–130
$^{13}C_6$-Fluoranthene	100	20–130
$^{13}C_3$-Pyrene	100	20–130
$^{13}C_6$-Benzo[*a*]anthracene	100	20–130
$^{13}C_6$-^{13}Chrysene	100	20–130
$^{13}C_6$-Benzo[*b*]fluoranthene	100	20–130

TABLE 23–8—COMPOSITION OF THE SAMPLE FORTIFICATION AND RECOVERY STANDARD SOLUTIONS FOR PAHS [a]—Continued

Compound	Amount (pg/µL of final extract) [b]	Spike recovery (percent)
$^{13}C_6$-Benzo[*k*]fluoranthene	100	20–130
$^{13}C_4$-Benzo[*e*]pyrene	100	20–130
$^{13}C_4$-Benzo[*a*]pyrene	100	20–130
d_{12}-Perylene	100	20–130
$^{13}C_6$-Indeno[*1,2,3-cd*]pyrene	100	20–130
$^{13}C_6$-Dibenz[*a,h*]anthracene	100	20–130
$^{13}C_{12}$-Benzo[*g,h,i*]perylene	100	20–150
Pre-analysis Standards		
d_{10}-Acenaphthene	100	S/N≥10
d_{10}-Pyrene	100	S/N≥10
d_{12}-Benzo[*e*]pyrene	100	S/N≥10

[a] Changes in the amounts of spike standards added to the sample or its representative extract will necessitate an adjustment of the calibration solutions to prevent the introduction of inconsistencies.
[b] Spike levels assume half of the extract will be archived before cleanup. You may adjust spike levels for different split levels.

TABLE 23–9—COMPOSITION OF THE SAMPLE FORTIFICATION AND RECOVERY STANDARD SOLUTIONS FOR PCBS [a]

Compound	BZ No. [b]	Amount (pg/µL of final extract) [c]	Spike recovery (percent)
Pre-sampling Adsorbent Standards			
$^{13}C_{12}$-3,3′-DiCB	11L	100	70–130
$^{13}C_{12}$-2,4′,5-TrCB	31L	100	70–130
$^{13}C_{12}$-2,2′,3,5′,6-PeCB	95L	100	70–130
$^{13}C_{12}$-2,2′,4,4′,5,5′-HxCB	153L	100	70–130
Pre-extraction Filter Recovery Spike Standards			
$^{13}C_{12}$-2,3,3′,4,5,5′-HxCB	159L	100	70–130
Pre-extraction Standards			
$^{13}C_{12}$-2-MoCB (WDC)	1L	100	20–145
$^{13}C_{12}$-4-MoCB (WDC)	3L	100	20–145
$^{13}C_{12}$-2,2′-DiCB (WDC)	4L	100	20–145
$^{13}C_{12}$-4,4′-DiCB (WDC)	15L	100	20–145
$^{13}C_{12}$-2,2′,6-TrCB (WDC)	19L	100	20–145
$^{13}C_{12}$-3,4′,4′-TrCB (WDC)	37L	100	20–145
$^{13}C_{12}$-2,2′,6,6′-TeCB (WDC)	54L	100	20–145
$^{13}C_{12}$-3,3′,4,4′-TeCB (WDC) (WHOT) (NOAAT)	77L	100	20–145
$^{13}C_{12}$-3,4,4′,5-TeCB (WHOT)	81L	100	20–145
$^{13}C_{12}$-2,2′,4,6,6′-PeCB (WDC)	104L	100	20–145
$^{13}C_{12}$-2,3,3′,4,4′-PeCB (WHOT)	105L	100	20–145
$^{13}C_{12}$-2,3,4,4′,5-PeCB (WHO)	114L	100	20–145
$^{13}C_{12}$-2,3′,4,4′,5-PeCB (WHOT)	118L	100	20–145
$^{13}C_{12}$-2′,3,4,4′,5-PeCB (WHOT)	123L	100	20–145
$^{13}C_{12}$-3,3′,4,4′,5-PeCB (WDC) (WHOT)	126L	100	20–145
$^{13}C_{12}$-2,2′,4,4′,6,6′-HxCB (WDC)	155L	100	20–145
$^{13}C_{12}$-2,3,3′,4,4′,5-HxCB (WHOT)	156L	100	20–145
$^{13}C_{12}$-2,3,3′,4,4′,5′-HxCB (WHOT)	157L	100	20–145
$^{13}C_{12}$-2,3′,4,4′,5,5′-HxCB (WHOT)	167L	100	20–145
$^{13}C_{12}$-3,3′,4,4′,5,5′-HxCB (WDC) (WHOT) (NOAAT)	169L	100	20–145
$^{13}C_{12}$-2,2′,3,3′,4,4′,5′-HpCB (NOAAT)	170L	100	20–145
$^{13}C_{12}$-2,2′,3,4,4′,5,5′-HpCB (NOAAT)	180L	100	20–145
$^{13}C_{12}$-2,2′,3,4′,5,6,6′-HpCB (WDC)	188L	100	20–145
$^{13}C_{12}$-2,3,3′,4,4′,5,5′-HpCB (WDC) (WHOT)	189L	100	20–145
$^{13}C_{12}$-2,2′,3′,3′,5,5′,6,6′-OcCB (WDC)	202L	100	20–145
$^{13}C_{12}$-2,3′,3′,4,4′,5,5′,6-OcCB (WDC)	205L	100	20–145
$^{13}C_{12}$-2,2′,3,3′,4,4′,5,5′,6-NoCB (WDC)	206L	100	20–145
$^{13}C_{12}$-2,2′,3,3′,4,5,5′,6,6′-NoCB (WDC)	208L	100	20–145
$^{13}C_{12}$-DeCB (WDC)	209L	100	20–145
Pre-analysis Standards			
$^{13}C_{12}$-2,5-DiCB	9L	100	S/N≥10
$^{13}C_{12}$-2,2′,5,5′-TeCB (NOAAT)	52L	100	S/N≥10

TABLE 23–9—COMPOSITION OF THE SAMPLE FORTIFICATION AND RECOVERY STANDARD SOLUTIONS FOR PCBS [a]—Continued

Compound	BZ No.[b]	Amount (pg/µL of final extract) [c]	Spike recovery (percent)
$^{13}C_{12}$-2,2′,4,5,5′-PeCBl (NOAAT)	101L	100	S/N≥10
$^{13}C_{12}$-2,2′,3,4,4′,5′-HxCB (NOAAT)	138L	100	S/N≥10
$^{13}C_{12}$-2,2′,3,3′,4,4′,5,5′-OcCB	194L	100	S/N≥10
Optional Cleanup Spiking Standards			
$^{13}C_{12}$-2-MoCB (NOAAT)	28L	100	20–130
$^{13}C_{12}$-2,2′,4,5,5′-PeCB	111L	100	20–130
$^{13}C_{12}$-2,2′,3,3′,5,5′,6,6′-OcCB	178L	100	20–130
Alternate Recovery Standards			
$^{13}C_{12}$-2,3′,4′,5-TeCB	70L	100	20–130
$^{13}C_{12}$-2,3,4,4′-TeCB	60L	100	20–130
$^{13}C_{12}$-3,3′,4,5,5′-PeCB	127L	100	20–130

[a] Changes in the amounts of spike standards added to the sample or its representative extract will necessitate an adjustment of the calibration solutions to prevent the introduction of inconsistencies.
[b] BZ No.: Ballschmiter and Zell 1980, or IUPAC number.
[c] Spike levels assume half of the extract will be archived before cleanup. Spike levels may be adjusted for different split levels.

TABLE 23–10—SAMPLE STORAGE CONDITIONS [a] AND LABORATORY HOLD TIMES [b]

Sample type	PCDD/PCDF	PAH	PCB
Field Storage and Shipping Conditions			
All Field Samples	≤20 ± 5 °C, (68 ± 9 °F)	≤20 ± 5 °C, (68 ± 9 °F)	≤20 ± 5 °C, (68 ± 9 °F).
Laboratory Storage Conditions			
Sampling Train Rinses and Filters	≤6 °C (43 °F)	≤6 °C (43 °F)	≤6 °C (43 °F).
Adsorbent	≤6 °C (43 °F)	≤6 °C (43 °F)	≤6 °C (43 °F).
Extract and Archive	< − 10 °C (14 °F)	< − 10 °C (14 °F)	< − 10 °C (14 °F).
Laboratory Hold Times			
Extract and Archive	One year	45 Days	One year.

[a] All samples must be stored in the dark.
[b] Hold times begin from the time the laboratory receives the samples.

TABLE 23–11—COMPOSITION OF THE INITIAL CALIBRATION STANDARD SOLUTIONS FOR PCDDS AND PCDFS [a]

[pg/µL]

Standard compound	Cal 1 (optional)	Cal 2	Cal 3	Cal 4	Cal 5	Cal 6	Cal 7 (optional)
Target (Unlabeled) Analytes	0.50	1.0	5.0	10.0	25	50	100
Pre-sampling Adsorbent Standards	50	50	50	50	50	50	50
Pre-extraction Filter Recovery Standards	50	50	50	50	50	50	50
Pre-extraction Standards	50	50	50	50	50	50	50
Pre-analysis Standards	50	50	50	50	50	50	50
Alternate Recovery Standards	50	50	50	50	50	50	50

[a] Assumes 1 µL injection volume.

TABLE 23–12—COMPOSITION OF THE INITIAL CALIBRATION STANDARD SOLUTIONS FOR PAHS [a]

[pg/µL]

Standard compound	Cal 1 (optional)	Cal 2	Cal 3	Cal 4	Cal 5	Cal 6	Cal 7 (optional)
Target (Unlabeled) Analytes	1	2	4	20	80	400	1,000
Pre-sampling Adsorbent Standards	100	100	100	100	100	100	100
Pre-extraction Filter Recovery Standards	100	100	100	100	100	100	100
Pre-extraction Standards	100	100	100	100	100	100	100
Pre-analysis Standards	100	100	100	100	100	100	100

[a] Assumes 1 µL injection volume.

TABLE 23–13—COMPOSITION OF THE INITIAL CALIBRATION STANDARD SOLUTIONS FOR PCBS [a]

[pg/μL]

Standard compound	Cal 1 (optional)	Cal 2	Cal 3	Cal 4	Cal 5	Cal 6	Cal 7 (optional)
Target (Unlabeled) Analytes	0.50	1	5	10	50	400	2,000
Pre-sampling Adsorbent Standard(s)	100	100	100	100	100	100	100
Pre-extraction Filter Recovery Standards	100	100	100	100	100	100	100
Pre-extraction Standards	100	100	100	100	100	100	100
Pre-analysis Standards	100	100	100	100	100	100	100
Alternate Standards	100	100	100	100	100	100	100

[a] Assumes 1 μL injection volume.

TABLE 23–14—MINIMUM REQUIREMENTS FOR INITIAL AND DAILY CALIBRATION RESPONSE FACTORS FOR ISOTOPICALLY LABELED AND NATIVE COMPOUNDS

Analyte group	Relative response factors	
	Initial calibration RSD	Daily and continuing calibration (percent difference)
Native (Unlabeled) Analytes	10	25
Pre-sampling Adsorbent Standard(s)	20	25
Pre-extraction Filter Recovery Standards	20	25
Pre-extraction Standards	20	30
Pre-analysis Standards	20	30
Alternative Recovery Standards	20	30

TABLE 23–15—RECOMMENDED ION TYPE AND ACCEPTABLE ION ABUNDANCE RATIOS

No. of chlorine atoms	Ion type	Theoretical ratio	Control limits	
			Lower	Upper
1	M/M+2	3.13	2.66	3.60
2	M/M+2	1.56	1.33	1.79
3	M/M+2	1.04	0.88	1.20
4	M/M+2	0.77	0.65	0.89
5	M+2/M+4	1.55	1.32	1.78
6	M+2/M+4	1.24	1.05	1.43
6 [a]	M/M+2	0.51	0.43	0.59
7	M+2/M+4	1.05	0.89	1.21
7 [b]	M/M+2	0.44	0.37	0.51
8	M+2/M+4	0.89	0.76	1.02
9	M+2/M+4	0.77	0.65	0.89
10	M+4/M+6	1.16	0.99	1.33

[a] Used only for ^{13}C-HxCDF.
[b] Used only for ^{13}C-HpCDF.

TABLE 23–16—TYPICAL DB5–MS COLUMN CONDITIONS

Column parameter	Analyte		
	PCDD/PCDF	PAH	PCB
Injector temperature	250 °C	320 °C	270 °C.
Initial oven temperature.	100 °C	100 °C	100 °C.
Initial hold time (minutes).	2	2	2.
Temperature program.	100 to 190 °C at 40 °C/min, then 190 to 300 °C at 3°C/min.	100 to 300 °C at 8°C/min	100 to 150 °C at 15 °C/min, then 150 to 290 °C at 2.5 °C/min.

TABLE 23–17—ASSIGNMENT OF PRE-EXTRACTION STANDARDS FOR QUANTITATION OF TARGET PCBS [b]

PCB congener	BZ No. [a]	Labeled analog	BZ No.
2,4′-DiCB (NOAAT)	8	$^{13}C_{12}$-2,2′-DiCB	4L
2,2′,5-TrCB (NOAAT)	18	$^{13}C_{12}$-2,2′,6-TrCB	19L
2,4,4′-TrCB (NOAAT)	28	$^{13}C_{12}$-2,2′,6-TrCB	19L
2,2′,3,5′-TeCB (NOAAT)	52	$^{13}C_{12}$-2,2′,6,6′-TeCB	54L

TABLE 23–17—ASSIGNMENT OF PRE-EXTRACTION STANDARDS FOR QUANTITATION OF TARGET PCBS [b]—Continued

PCB congener	BZ No. [a]	Labeled analog	BZ No.
2,2′,5,5′-TeCB (NOAAT)	52	$^{13}C_{12}$-2,2′,6,6′-TeCB	54L
2,3′,4,4′-TeCB (NOAAT)	66	$^{13}C_{12}$-2,2′,6,6′-TeCB	54L
3,3′,4,4′-TeCB (NOAAT) (WHOT)	77	$^{13}C_{12}$-3,3′,4,4′-TeCB	77L
3,4,4′,5-TeCB (WHOT)	81	$^{13}C_{12}$-3,4,4′′,5-TeCB	81L
2,2′,4,5,5′-PeCB (NOAAT)	101	$^{13}C_{12}$-2,2′,4,5,5′-PeCB	104L
2,3,3′,4,4′-PeCB (NOAAT) (WHOT)	105	$^{13}C_{12}$-2,3,3′,4,4′-PeCB	105L
2,3,4,4′,5-PeCB (WHOT)	114	$^{13}C_{12}$-2,3,4,4′,5-PeCB	114L
2,3′,4,4′,5-PeCB (WHOT)	118	$^{13}C_{12}$-2,3′,4,4′,5-PeCB	118L
2′,3,4,4′,5-PeCB (WHOT)	123	$^{13}C_{12}$-2′,3,4,4′,5-PeCB	123L
3,3′,4,4′,5-PeCB (NOAAT) (WHOT)	126	$^{13}C_{12}$-3,3′,4,4′,5-PeCB	126L
2,2′,3,3′,4,4′-HxCB (NOAAT)	128	$^{13}C_{12}$-2,2′,4,4′,6,6′-HxCB	155L
2,2′,3,4,4′,5′-HxCB (NOAAT)	138	$^{13}C_{12}$-2,2′, 4,4′,6,6′-HxCB	155L
2,2′,4,4′,5,5′-HxCB (NOAAT)	153	$^{13}C_{12}$-2,2′, 4,4′,6,6′-HxCB	155L
2,3,3′,4,4′,5-HxCB (WHOT)	156	$^{13}C_{12}$-2,3,3′,4,4′,5-HxCB	156L
2,3,3′,4,4′,5′-HxCB (WHOT)	157	$^{13}C_{12}$-2,3,3′,4,4′,5′-HxCB	157L
2,3′,4,4′,5,5′-HxCB (WHOT)	167	$^{13}C_{12}$-2,3′,4,4′,5,5′-HxCB	167L
3,3′,4,4′,5,5′-HxCB (NOAAT) (WHOT)	169	$^{13}C_{12}$-3,3′,4,4′,5,5′-HxCB	169L
2,2′,3,3′,4,4′,5-HpCB (NOAA)	170	$^{13}C_{12}$-2,2′,3,3′,4,4′,5′-HpCB	170L
2,2′,3,4,4′,5,5′-HpCB (NOAAT)	180	$^{13}C_{12}$-2,2′,3,4,4′,5,5′-HpCB	180L
2,2′,3,4′,5,5′,6-HpCB (NOAAT)	187	$^{13}C_{12}$-2,2′,3,4′,5,6,6′-HpCB	188L
2,3,3′,4,4′,5,5′-HpCB (WHOT)	189	$^{13}C_{12}$-2,3,3′,4,4′,5,5′-HpCB	189L
2,2′,3,3′,4,4′,5,6-OcCB (NOAAT)	195	$^{13}C_{12}$-2,2′ 3,3′,5,5′,6,6′-OcCB	202L
2,2′,3,3′,4,4′,5,5′,6-NoCB (NOAAT)	206	$^{13}C_{12}$-2,2′,3,3′,4,4′,5,5′,6-NoCB	206L
2,2′,3,3′,4,4′,5,5′,6,6′-DeCB (NOAAT)	209	$^{13}C_{12}$-DeCB	209L

[a] BZ No.: Ballschmiter and Zell 1980, or IUPAC number.
[b] Assignments assume the use of the SPB-Octyl column. In the event you choose another column, you may select the labeled standard having the same number of chlorine substituents and the closest retention time to the target analyte in question as the labeled standard to use for quantitation.

TABLE 23–18—ESTIMATED METHOD DETECTION LIMITS FOR PCDDS AND PCDFS

Target	MDL [a] (ng/sample)	TEQ–DL (ng/sample)
Total OCDD	1.75E–01	5.00E–05
Total OCDF	5.38E–02	1.51E–05
1,2,3,4,6,7,8-HpCDD	2.36E–02	2.16E–04
1,2,3,4,6,7,8-HpCDF	4.88E–02	4.82E–04
1,2,3,4,7,8-HxCDD	9.26E–03	8.50E–04
1,2,3,4,7,8-HxCDF	6.60E–02	6.48E–03
1,2,3,4,7,8,9-HpCDF	2.46E–02	2.40E–04
1,2,3,6,7,8-HxCDD	1.06E–02	9.86E–04
1,2,3,6,7,8-HxCDF	7.72E–03	7.06E–04
1,2,3,7,8-PeCDD	3.52E–02	3.46E–02
1,2,3,7,8-PeCDF	1.46E–02	4.20E–04
1,2,3,7,8,9-HxCDD	2.70E–02	2.60E–03
1,2,3,7,8,9-HxCDF	6.24E–03	5.54E–04
2,3,4,6,7,8-HxCDF	1.88E–02	1.82E–03
2,3,4,7,8-PeCDF	1.29E–02	3.70E–03
2,3,7,8-TeCDD	2.70E–02	2.68E–02
2,3,7,8-TeCDF	1.80E–02	1.75E–03
Mean DL	2.34E–02	5.48E–03
Sum of DL	2.90E–01	4.11E–02

[a] Detection Limits are based on a survey of laboratories MDL data from Information Collection Requests from the Industrial Boiler and Utility MACT rulemaking process. MDL assumes half of the sample was archived before concentration.

TABLE 23–19—TARGET DETECTION LIMITS FOR PAHS [a]

Target	MDL (ng/sample)
Naphthalene	110.5
2-Methylnaphthalene	36.3
Acenaphthylene	31.4
Acenaphthene	11.3
Fluorene	12.8
Phenanthrene	19.9
Anthracene	11.8
Fluoranthene	9.0
Pyrene	7.6
Benzo[*a*]anthracene	6.2

TABLE 23–19—TARGET DETECTION LIMITS FOR PAHS [a]—Continued

Target	MDL (ng/sample)
Chrysene	6.2
Benzo[*b*]fluoranthene	7.8
Benzo[*k*]fluoranthene	6.4
Benzo[*e*]pyrene	3.3
Benzo[*a*]pyrene	15.9
Perylene	28.3
Indeno[*1,2,3-cd*]pyrene	7.2
Dibenz[*a,h*]anthracene	6.8
Benzo[*g,h,i*]perylene	6.8
Mean DL	23
Sum of DL	435

[a] Detection limits are based on a survey of laboratories MDL data from Information Collection Requests form the Coke Oven and Electric Power Generating unit MACT rulemaking process.

TABLE 23–20—ESTIMATED METHOD DETECTION LIMITS FOR PCBS [a]

Target	BZ No.	Target detection limit (pg/sample)
2,4′-DiCB	8	30
2,2′,5-TrCB	18	32
2,4,4′-TrCB	28	44
2,2′,3,5′-TeCB	44	80
2,2′,5,5′-TeCB	52	30
2,3′,4,4′-TeCB	66	34
3,3′,4,4′-TeCB	77	28
3,4,4′,5-TeCB	81	36
2,2′,4,5,5′-PeCB	101	94
2,3,3′,4,4′-PeCB	105	34
2,3,4,4′,5-PeCB	114	30
2,3′,4,4′,5-PeCB	118	60
2′,3,4,4′,5-PeCB	123	34
3,3′,4,4′,5-PeCB	126	32
2,2′,3,3′,4,4′-HxCB	128	58
2,2′,3,4,4′,5′-HxCB	138	72
2,2′,4,4′,5,5′-HxCB	153	60
2,3,3′,4,4′,5-HxCB	156	46
2,3,3′,4,4′,5′-HxCB	157	46
2,3′,4,4′,5,5′-HxCB	167	26
3,3′,4,4′,5,5′-HxCB	169	30
2,2′,3,3′,4,4′,5-HpCB	170	24
2,2′,3,4,4′,5,5′-HpCB	180	60
2,2′,3,4′,5,5′,6-HpCB	187	34
2,3,3′,4,4′,5,5′-HpCB	189	26
2,2′,3,3′,4,4′,5,6-OcCB	195	44
2,2′,3,3′,4,4′,5,5′,6-NoCB	206	32
2,2′,3,3′,4,4′,5,5′,6,6′-DeCB	209	32
Mean DL	.....	42
Sum of DL	.....	1,188

[a] Detection Limits are based on information from EPA Method 1668C, assuming half of the sample extract is archived before concentration.

BILLING CODE 6560–50–P

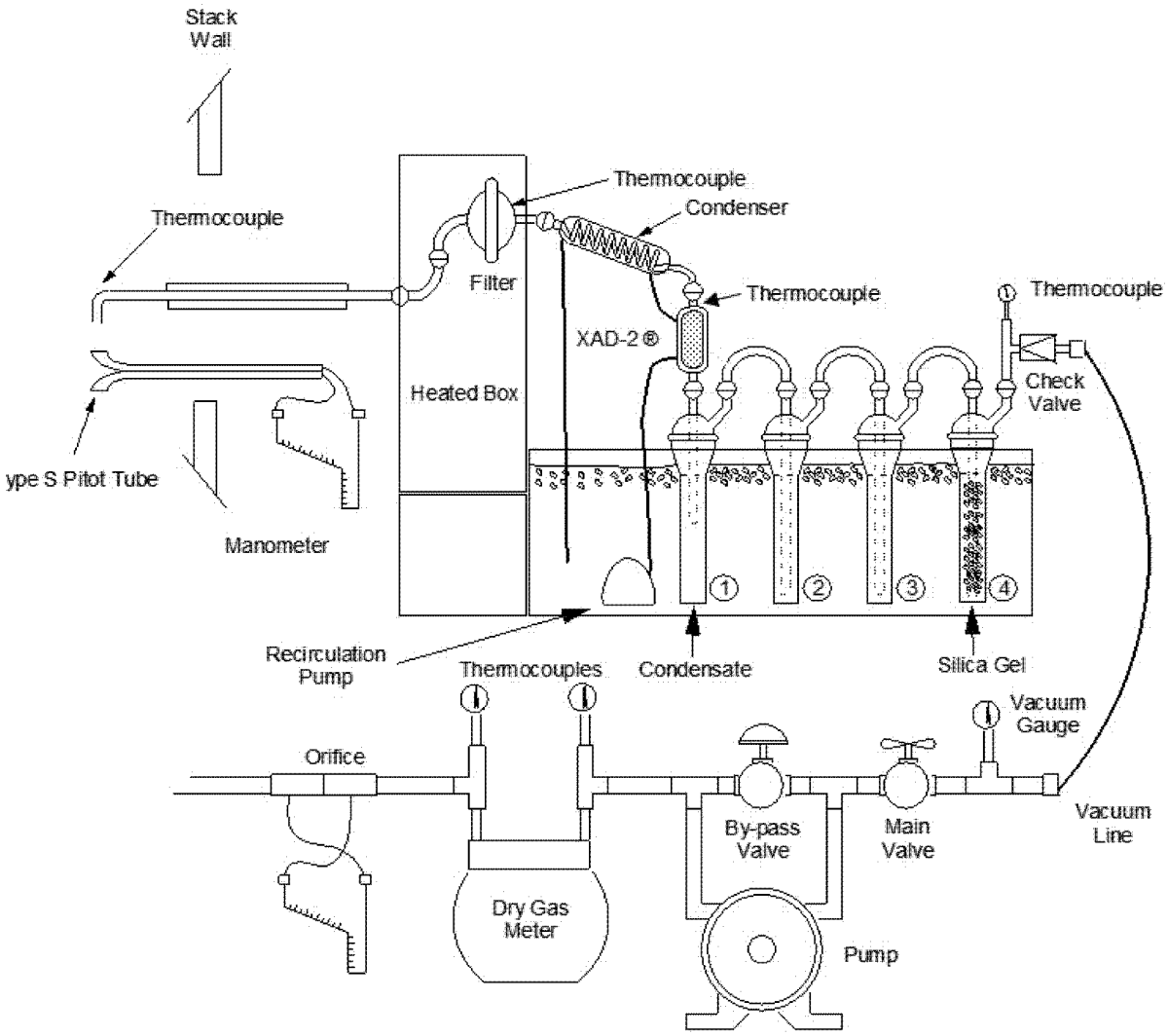

Figure 23-1. Method 23 Sampling Train

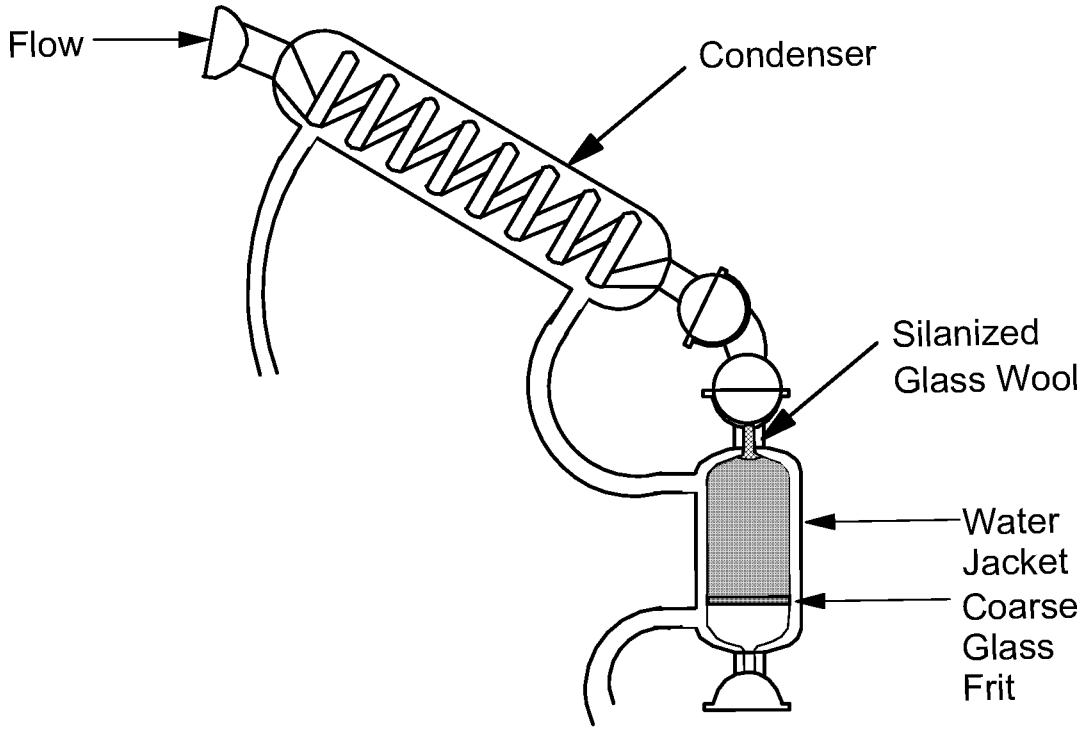

Figure 23–2. Condenser and Adsorbent Module

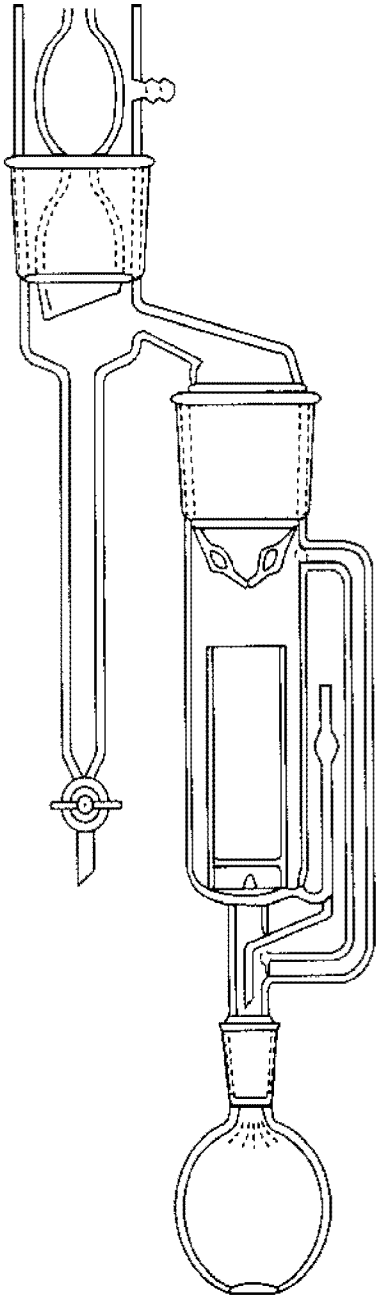

Figure 23–3. Soxhlet/Dean-Stark Extractor

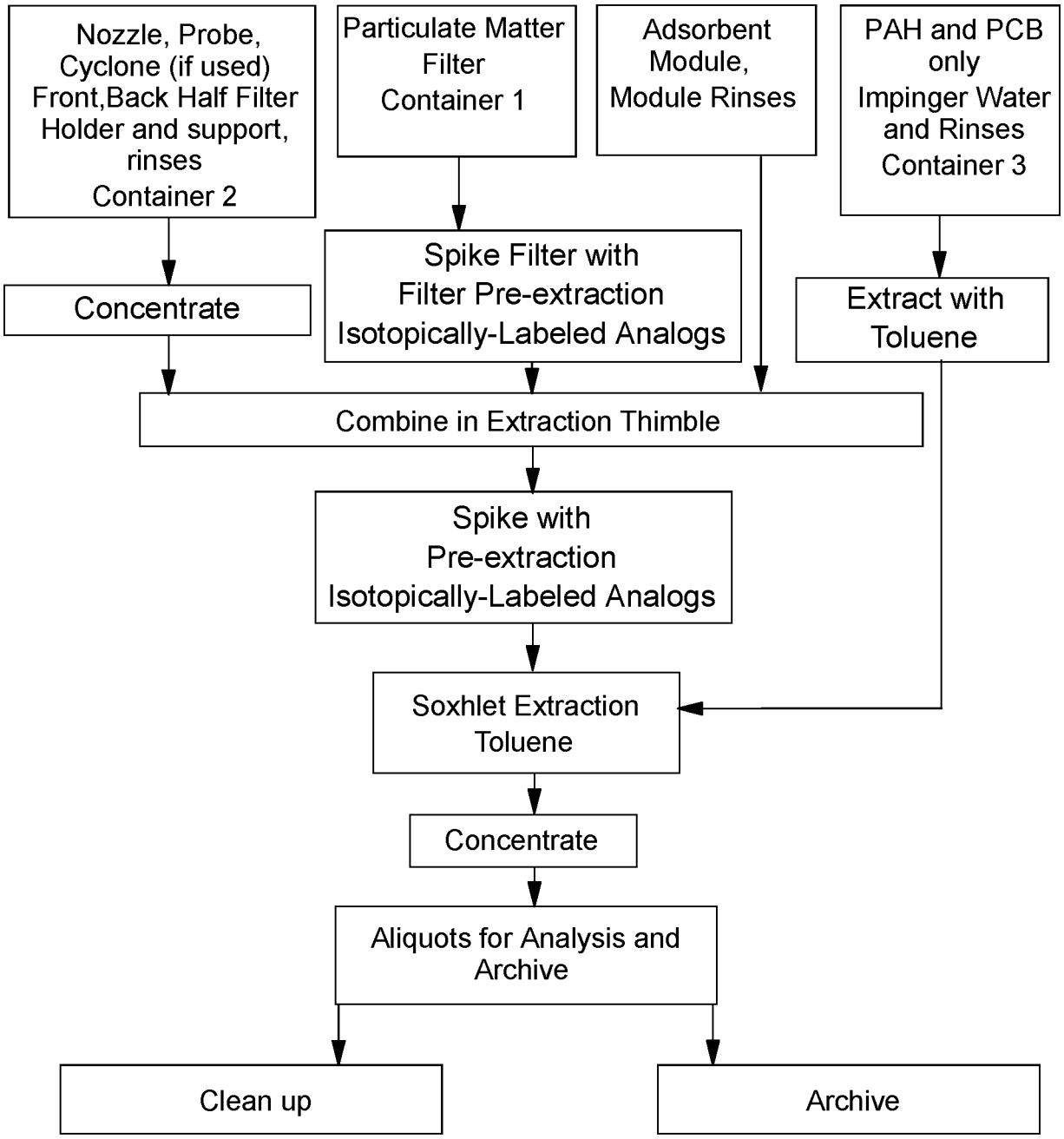

Figure 23–4. Sample Preparation Flow Chart

BILLING CODE 6560–50–P

Appendix A to Method 23

COMPLETE LIST OF 209 PCB CONGENERS AND THEIR ISOMERS WITH CORRESPONDING ISOTOPE DILUTION QUANTITATION STANDARDS [a]

Pre-extraction standard	BZ [b] No.	Unlabeled target analyte	BZ [b] No.	Pre-extraction standard	BZ [b] No.	Unlabeled target analyte	BZ [b] No.
MoCBs				**DiCBs**			
$^{13}C_{12}$-2-MoCB	1L	2-MoCB	1	$^{13}C_{12}$-2,2′-DiCB	4L	2,2′-DiCB	4
$^{13}C_{12}$-2-MoCB	1L	3-MoCB	2	$^{13}C_{12}$-2,2′-DiCB	4L	2,3-DiCB	5
$^{13}C_{12}$-4-MoCB	3L	4-MoCB	3	$^{13}C_{12}$-2,2′-DiCB	4L	2,3′-DiCB	6
				$^{13}C_{12}$-2,2′-DiCB	4L	2,4-DiCB	7
				$^{13}C_{12}$-2,2′-DiCB	4L	2,4′-DiCB	8
				$^{13}C_{12}$-2,2′-DiCB	4L	2,5-DiCB	9
				$^{13}C_{12}$-2,2′-DiCB	4L	2,6-DiCB	10
				$^{13}C_{12}$-2,2′-DiCB	4L	3,3′-DiCB	11
				$^{13}C_{12}$-2,2′-DiCB	4L	3,4-DiCB	12
				$^{13}C_{12}$-2,2′-DiCB	4L	3,4′-DiCB	13
				$^{13}C_{12}$-2,2′-DiCB	4L	3,5-DiCB	14
				$^{13}C_{12}$-4,4′-DiCB	15L	4,4′-DiCB	15
TrCBs							
$^{13}C_{12}$-2,2′,6-TrCB	19L	2,2′,3-TrCBTrCB	16	$^{13}C_{12}$-3,4,4′-TrCB	19L	2,4,4′-TrCB	28
$^{13}C_{12}$-2,2′,6-TrCB	19L	2,2′,4-TrCB	17	$^{13}C_{12}$-3,4,4′-TrCB	19L	2,4,5-TrCB	29
$^{13}C_{12}$-2,2′,6-TrCB	19L	2,2′,5-TrCB	18	$^{13}C_{12}$-3,4,4′-TrCB	19L	2,4,6-TrCB	30
$^{13}C_{12}$-2,2′,6-TrCB	19L	2,2′,6-TrCB	19	$^{13}C_{12}$-3,4,4′-TrCB	19L	2,4′,5-TrCB	31
$^{13}C_{12}$-2,2′,6-TrCB	19L	2,3,3′-TrCB	20	$^{13}C_{12}$-3,4,4′-TrCB	19L	2,4′,6-TrCB	32
$^{13}C_{12}$-2,2′,6-TrCB	19L	2,3,4-TrCB	21	$^{13}C_{12}$-3,4,4′-TrCB	19L	2′,3,4-TrCB	33
$^{13}C_{12}$-2,2′,6-TrCB	19L	2,3,4′-TrCB	22	$^{13}C_{12}$-3,4,4′-TrCB	19L	2′,3,5-TrCB	34
$^{13}C_{12}$-2,2′,6-TrCB	19L	2,3,5- TrCB	23	$^{13}C_{12}$-3,4,4′-TrCB	19L	3,3′,4-TrCB	35
$^{13}C_{12}$-2,2′,6-TrCB	19L	2,3,6- TrCB	23	$^{13}C_{12}$-3,4,4′-TrCB	19L	3,3′,5-TrCB	36
$^{13}C_{12}$-2,2′,6-TrCB	19L	2,3′,4-TrCB	25	$^{13}C_{12}$-3,4′,4′-TrCB	37L	3,4,4′-TrCB	37
$^{13}C_{12}$-2,2′,6-TrCB	19L	2,3′,5-TrCB	26	$^{13}C_{12}$-3,4′,4′-TrCB	37L	3,4,5-TrCB	38
$^{13}C_{12}$-2,2′,6-TrCB	19L	2,3′,6-TrCB	27	$^{13}C_{12}$-3,4′,4′-TrCB	37L	3,4′,5-TrCB	39
TeCBs							
$^{13}C_{12}$-2,2′,6,6′-TeCB	54L	2,2′,3,3′-TeCB	40	$^{13}C_{12}$-2,2′,6,6′-TeCB	54L	2,3,4,5-TeCB	61
$^{13}C_{12}$-2,2′,6,6′-TeCB	54L	2,2′,3,4-TeCB	41	$^{13}C_{12}$-2,2′,6,6′-TeCB	54L	2,3,4,6-TeCB	62
$^{13}C_{12}$-2,2′,6,6′-TeCB	54L	2,2′,3,4′-TeCB	42	$^{13}C_{12}$-2,2′,6,6′-TeCB	54L	2,3,4′,5-TeCB	63
$^{13}C_{12}$-2,2′,6,6′-TeCB	54L	2,2′,3,5-TeCB	43	$^{13}C_{12}$-2,2′,6,6′-TeCB	54L	2,3,4′,6-TeCB	64
$^{13}C_{12}$-2,2′,6,6′-TeCB	54L	2,2′,3,5′-TeCB	44	$^{13}C_{12}$-2,2′,6,6′-TeCB	54L	2,3,5,6-TeCB	65
$^{13}C_{12}$-2,2′,6,6′-TeCB	54L	2,2′,3,6-TeCB	45	$^{13}C_{12}$-2,2′,6,6′-TeCB	54L	2,3′,4,4′-TeCB	66
$^{13}C_{12}$-2,2′,6,6′-TeCB	54L	2,2′,3,6′-TeCB	46	$^{13}C_{12}$-2,2′,6,6′-TeCB	54L	2,3′,4,5-TeCB	67
$^{13}C_{12}$-2,2′,6,6′-TeCB	54L	2,2′,4,4′-TeCB	47	$^{13}C_{12}$-2,2′,6,6′-TeCB	54L	2,3′,4,5′-TeCB	68
$^{13}C_{12}$-2,2′,6,6′-TeCB	54L	2,2′,4,5-TeCB	48	$^{13}C_{12}$-2,2′,6,6′-TeCB	54L	2,3′,4,6-TeCB	69
$^{13}C_{12}$-2,2′,6,6′-TeCB	54L	2,2′,4,5′-TeCB	49	$^{13}C_{12}$-2,2′,6,6′-TeCB	54L	2,3′,4′,5-TeCB	70
$^{13}C_{12}$-2,2′,6,6′-TeCB	54L	2,2′,4,6-TeCB	50	$^{13}C_{12}$-2,2′,6,6′-TeCB	54L	2,3′,4′,6-TeCB	71
$^{13}C_{12}$-2,2′,6,6′-TeCB	54L	2,2′,4,6′-TeCB	51	$^{13}C_{12}$-2,2′,6,6′-TeCB	54L	2,3′,5,5′-TeCB	72
$^{13}C_{12}$-2,2′,6,6′-TeCB	54L	2,2′,5,5′-TeCB	52	$^{13}C_{12}$-2,2′,6,6′-TeCB	54L	2,3′,5′,6-TeCB	73
$^{13}C_{12}$-2,2′,6,6′-TeCB	54L	2,2′,5,6′-TeCB	53	$^{13}C_{12}$-2,2′,6,6′-TeCB	54L	2,4,4′,5-TeCB	74
$^{13}C_{12}$-2,2′,6,6′-TeCB	54L	2,2′,6,6′-TeCB	54	$^{13}C_{12}$-2,2′,6,6′-TeCB	54L	2,4,4′,6-TeCB	75
$^{13}C_{12}$-2,2′,6,6′-TeCB	54L	2,3,3′,4′-TeCB	55	$^{13}C_{12}$-2,2′,6,6′-TeCB	54L	2′,3,4,5-TeCB	76
$^{13}C_{12}$-2,2′,6,6′-TeCB	54L	2,3,3′,4′-TeCB	56	$^{13}C_{12}$-3,3′,4,4′-TeCB	77L	3,3′,4,4′-TeCB	77
$^{13}C_{12}$-2,2′,6,6′-TeCB	54L	2,3,3′,5-TeCB	57	$^{13}C_{12}$-3,3′,4,4′-TeCB	77L	3,3′,4,5-TeCB	78
$^{13}C_{12}$-2,2′,6,6′-TeCB	54L	2,3,3′,5′-TeCB	58	$^{13}C_{12}$-3,3′,4,4′-TeCB	77L	3,3′,4,5′-TeCB	79
$^{13}C_{12}$-2,2′,6,6′-TeCB	54L	2,3,3′,6-TeCB	59	$^{13}C_{12}$-3,3′,4,4′-TeCB	77L	3,3′,5,5′-TeCB	80
$^{13}C_{12}$-2,2′,6,6′-TeCB	54L	2,3,4,4′-TeCB	60	$^{13}C_{12}$-3,4,4′,5-TeCB	81L	3,4,4′,5-TeCB	81
PeCBs							
$^{13}C_{12}$-2,2′,4,6,6′-PeCB	104L	2,2′,3,3′,4-PeCB	82	$^{13}C_{12}$-2,3,3′,4,4′-PeCB	105L	2,3,3′,4,4′-PeCB	105
$^{13}C_{12}$-2,2′,4,6,6′-PeCB	104L	2,2′,3,3′,5-PeCB	83	$^{13}C_{12}$-2,3,3′,4,4′-PeCB	105L	2,3,3′,4,5-PeCB	106
$^{13}C_{12}$-2,2′,4,6,6′-PeCB	104L	2,2′,3,3′,6-PeCB	84	$^{13}C_{12}$-2,3,3′,4,4′-PeCB	105L	2,3,3′,4′,5-PeCB	107
$^{13}C_{12}$-2,2′,4,6,6′-PeCB	104L	2,2′,3,4,4′-PeCB	85	$^{13}C_{12}$-2,3,3′,4,4′-PeCB	105L	2,3,3′,4,5′-PeCB	108
$^{13}C_{12}$-2,2′,4,6,6′-PeCB	104L	2,2′,3,4,5-PeCB	86	$^{13}C_{12}$-2,3,3′,4,4′-PeCB	105L	2,3,3′,4,6-PeCB	109
$^{13}C_{12}$-2,2′,4,6,6′-PeCB	104L	2,2′,3,4,5′-PeCB	87	$^{13}C_{12}$-2,3,3′,4,4′-PeCB	105L	2,3,3′,4′,6-PeCB	110
$^{13}C_{12}$-2,2′,4,6,6′-PeCB	104L	2,2′,3,4,6-PeCB	88	$^{13}C_{12}$-2,3,3′,4,4′-PeCB	105L	2,3,3′,5,5′-PeCB	111
$^{13}C_{12}$-2,2′,4,6,6′-PeCB	104L	2,2′,3,4,6′-PeCB	89	$^{13}C_{12}$-2,3,3′,4,4′-PeCB	105L	2,3,3′,5,6-PeCB	112
$^{13}C_{12}$-2,2′,4,6,6′-PeCB	104L	2,2′,3,4′,5-PeCB	90	$^{13}C_{12}$-2,3,3′,4,4′-PeCB	105L	2,3,3′,5′,6-PeCB	113
$^{13}C_{12}$-2,2′,4,6,6′-PeCB	104L	2,2′,3,4′,6-PeCB	91	$^{13}C_{12}$-2,3,4,4′,5-PeCB	114L	2,3,4,4′,5-PeCB	114
$^{13}C_{12}$-2,2′,4,6,6′-PeCB	104L	2,2′,3,5,5′-PeCB	92	$^{13}C_{12}$-2,3,4,4′,5-PeCB	114L	2,3,4,4′,6-PeCB	115
$^{13}C_{12}$-2,2′,4,6,6′-PeCB	104L	2,2′,3,5,6-PeCB	93	$^{13}C_{12}$-2,3,4,4′,5-PeCB	114L	2,3,4,5,6-PeCB	116
$^{13}C_{12}$-2,2′,4,6,6′-PeCB	104L	2,2′,3,5,6′-PeCB	94	$^{13}C_{12}$-2,3,4,4′,5-PeCB	114L	2,3,4′,5,6-PeCB	117
$^{13}C_{12}$-2,2′,4,6,6′-PeCB	104L	2,2′,3,5′,6-PeCB	95	$^{13}C_{12}$-2,3′,4,4′,5-PeCB	118L	2,3′,4,4′,5-PeCB	118
$^{13}C_{12}$-2,2′,4,6,6′-PeCB	104L	2,2′,3,6,6′-PeCB	96	$^{13}C_{12}$-2,3′,4,4′,5-PeCB	118L	2,3′,4,4′,6-PeCB	119
$^{13}C_{12}$-2,2′,4,6,6′-PeCB	104L	2,2′,3′,4,5-PeCB	97	$^{13}C_{12}$-2,3′,4,4′,5-PeCB	118L	2,3′,4,5,5′-PeCB	120
$^{13}C_{12}$-2,2′,4,6,6′-PeCB	104L	2,2′,3′,4,6-PeCB	98	$^{13}C_{12}$-2,3′,4,4′,5-PeCB	118L	2,3′,4,5,′6-PeCB	121
$^{13}C_{12}$-2,2′,4,6,6′-PeCB	104L	2,2′,4,4′,5-PeCB	99	$^{13}C_{12}$-2,3′,4,4′,5-PeCB	118L	2′,3,3′,4,5-PeCB	122
$^{13}C_{12}$-2,2′,4,6,6′-PeCB	104L	2,2′,4,4′,6-PeCB	100	$^{13}C_{12}$-2′,3,4,4′,5-PeCB	123L	2′,3,4,4′,5-PeCB	123
$^{13}C_{12}$-2,2′,4,6,6′-PeCB	104L	2,2′,4,5,5′-PeCB	101	$^{13}C_{12}$-2′,3,4,4′,5-PeCB	123L	2′,3,4,5,5′-PeCB	124
$^{13}C_{12}$-2,2′,4,6,6′-PeCB	104L	2,2′,4,5,6′-PeCB	102	$^{13}C_{12}$-2′,3,4,4′,5-PeCB	123L	2′,3,4,5,6′-PeCB	125
$^{13}C_{12}$-2,2′,4,6,6′-PeCB	104L	2,2′,4,5,′6-PeCB	103	$^{13}C_{12}$-3,3′,4,4′,5-PeCB	126L	3,3′,4,4′,5-PeCB	126
$^{13}C_{12}$-2,2′,4,6,6′-PeCB	104L	2,2′,4,6,6′-PeCB	104	$^{13}C_{12}$-3,3′,4,4′,5-PeCB	126L	3,3′,4,5,5′-PeCB	127

COMPLETE LIST OF 209 PCB CONGENERS AND THEIR ISOMERS WITH CORRESPONDING ISOTOPE DILUTION QUANTITATION STANDARDS [a]—Continued

Pre-extraction standard	BZ [b] No.	Unlabeled target analyte	BZ [b] No.	Pre-extraction standard	BZ [b] No.	Unlabeled target analyte	BZ [b] No.
HxCBs							
$^{13}C_{12}$-2,2′,4,4′,6,6′-HxCB	155L	2,2′,3,3′,4,4′-HxCB	128	$^{13}C_{12}$-2,2′,4,4′,6,6′-HxCB	155L	2,2′,3,4′,5′,6-HxCB	149
$^{13}C_{12}$-2,2′,4,4′,6,6′-HxCB	155L	2,2′,3,3′,4,5-HxCB	129	$^{13}C_{12}$-2,2′,4,4′,6,6′-HxCB	155L	2,2′,3,4′,6,6′-HxCB	150
$^{13}C_{12}$-2,2′,4,4′,6,6′-HxCB	155L	2,2′,3,3′,4,5′-HxCB	130	$^{13}C_{12}$-2,2′,4,4′,6,6′-HxCB	155L	2,2′,3,5,5′,6-HxCB	151
$^{13}C_{12}$-2,2′,4,4′,6,6′-HxCB	155L	2,2′,3,3′,4,6-HxCB	131	$^{13}C_{12}$-2,2′,4,4′,6,6′-HxCB	155L	2,2′,3,5,6,6′-HxCB	152
$^{13}C_{12}$-2,2′,4,4′,6,6′-HxCB	155L	2,2′,3,3′,4,6′-HxCB	132	$^{13}C_{12}$-2,2′,4,4′,6,6′-HxCB	155L	2,2′,4,4′,5,5′-HxCB	153
$^{13}C_{12}$-2,2′,4,4′,6,6′-HxCB	155L	2,2′,3,3′,5,5′-HxCB	133	$^{13}C_{12}$-2,2′,4,4′,6,6′-HxCB	155L	2,2′,4,4′,5′,6-HxCB	154
$^{13}C_{12}$-2,2′,4,4′,6,6′-HxCB	155L	2,2′,3,3′,5,6-HxCB	134	$^{13}C_{12}$-2,2′,4,4′,6,6′-HxCB	155L	2,2′,4,4′,6,6′-HxCB	155
$^{13}C_{12}$-2,2′,4,4′,6,6′-HxCB	155L	2,2′,3,3′,5,6′-HxCB	135	$^{13}C_{12}$-2,3,3′,4,4′,5- HxCB	156L	2,3,3′,4,4′,5-HxCB	156
$^{13}C_{12}$-2,2′,4,4′,6,6′-HxCB	155L	2,2′,3,3′,6,6′-HxCB	136	$^{13}C_{12}$-2,3,3′,4,4′,5′-HxCB	157L	2,3,3′,4,4′,5′-HxCB	157
$^{13}C_{12}$-2,2′,4,4′,6,6′-HxCB	155L	2,2′,3,4,4′,5-HxCB	137	$^{13}C_{12}$-2,3,3′,4,4′,5′-HxCB	157L	2,3,3′,4,4′,6-HxCB	158
$^{13}C_{12}$-2,2′,4,4′,6,6′-HxCB	155L	2,2′,3,4,4′,5′-HxCB	138	$^{13}C_{12}$-2,3,3′,4,4′,5′-HxCB	157L	2,3,3′,4,5,5′-HxCB	158
$^{13}C_{12}$-2,2′,4,4′,6,6′-HxCB	155L	2,2′,3,4,4′,6-HxCB	139	$^{13}C_{12}$-2,3,3′,4,4′,5′-HxCB	157L	2,3,3′,4,5,6-HxCB	160
$^{13}C_{12}$-2,2′,4,4′,6,6′-HxCB	155L	2,2′,3,4,4′,6′-HxCB	140	$^{13}C_{12}$-2,3,3′,4,4′,5′-HxCB	157L	2,3,3′,4,5′,6-HxCB	161
$^{13}C_{12}$-2,2′,4,4′,6,6′-HxCB	155L	2,2′,3,4,5,5′-HxCB	141	$^{13}C_{12}$-2,3,3′,4,4′,5′-HxCB	157L	2,3,3′,4′,5,5′-HxCB	162
$^{13}C_{12}$-2,2′,4,4′,6,6′-HxCB	155L	2,2′,3,4,5,6-HxCB	142	$^{13}C_{12}$-2,3,3′,4,4′,5′-HxCB	157L	2,3,3′,4′,5,6-HxCB	163
$^{13}C_{12}$-2,2′,4,4′,6,6′-HxCB	155L	2,2′,3,4,5,6′-HxCB	143	$^{13}C_{12}$-2,3,3′,4,4′,5′-HxCB	157L	2,3,3′,4′,5′,6-HxCB	164
$^{13}C_{12}$-2,2′,4,4′,6,6′-HxCB	155L	2,2′,3,4,5′,6-HxCB	144	$^{13}C_{12}$-2,3,3′,4,4′,5′-HxCB	157L	2,3,3′,5,5′,6-HxCB	165
$^{13}C_{12}$-2,2′,4,4′,6,6′-HxCB	155L	2,2′,3,4,6,6′-HxCB	145	$^{13}C_{12}$-2,3,3′,4,4′,5′-HxCB	157L	2,3,4,4′,5,6-HxCB	166
$^{13}C_{12}$-2,2′,4,4′,6,6′-HxCB	155L	2,2′,3,4′,5,5′-HxCB	146	$^{13}C_{12}$-2,3′,4,4′,5,5′-HxCB	167L	2,3′,4,4′,5,5′-HxCB	167
$^{13}C_{12}$-2,2′,4,4′,6,6′-HxCB	155L	2,2′,3,4′,5,6-HxCB	147	$^{13}C_{12}$-2,3′,4,4′,5,5′-HxCB	167L	2,3′,4,4′,5′,6-HxCB	168
$^{13}C_{12}$-2,2′,4,4′,6,6′-HxCB	155L	2,2′,3,4′,5,6′-HxCB	148	$^{13}C_{12}$-3,3′,4,4′,5,5′-HxCB	169L	3,3′,4,4′,5,5′-HxCB	169
HpCBs							
$^{13}C_{12}$-2,2′,3,4′,5,6,6′-HpCB	188L	2,2′,3,3′,4,4′,5-HpCB	170	$^{13}C_{12}$-2,2′,3,4′,5,6,6′-HpCB	188L	2,2′,3,4,4′,5,6′-HpCB	182
$^{13}C_{12}$-2,2′,3,4′,5,6,6′-HpCB	188L	2,2′,3,3′,4,4′,6-HpCB	171	$^{13}C_{12}$-2,2′,3,4′,5,6,6′-HpCB	188L	2,2′,3,4,4′,5′,6-HpCB	183
$^{13}C_{12}$-2,2′,3,4′,5,6,6′-HpCB	188L	2,2′,3,3′,4,5,5′-HpCB	172	$^{13}C_{12}$-2,2′,3,4′,5,6,6′-HpCB	188L	2,2′,3,4,4′,5′,6-HpCB	184
$^{13}C_{12}$-2,2′,3,4′,5,6,6′-HpCB	188L	2,2′,3,3′,4,5,6-HpCB	173	$^{13}C_{12}$-2,2′,3,4′,5,6,6′-HpCB	188L	2,2′,3,4,4′,6,6′-HpCB	185
$^{13}C_{12}$-2,2′,3,4′,5,6,6′-HpCB	188L	2,2′,3,3′,4,5,6′-HpCB	174	$^{13}C_{12}$-2,2′,3,4′,5,6,6′-HpCB	188L	2,2′,3,4,5,5′,6-HpCB	186
$^{13}C_{12}$-2,2′,3,4′,5,6,6′-HpCB	188L	2,2′,3,3′,4,5′,6-HpCB	175	$^{13}C_{12}$-2,2′,3,4′,5,6,6′-HpCB	188L	2,2′,3,4′,5,5′,6-HpCB	187
$^{13}C_{12}$-2,2′,3,4′,5,6,6′-HpCB	188L	2,2′,3,3′,4,6,6′-HpCB	176	$^{13}C_{12}$-2,2′,3,4′,5,6,6′-HpCB	188L	2,2′,3,4′,5,6,6′-HpCB	188
$^{13}C_{12}$-2,2′,3,4′,5,6,6′-HpCB	188L	2,2′,3,3′,4′,5,6-HpCB	177	$^{13}C_{12}$-2,3,3′,4,4′,5,5′-HpCB	189L	2,3,3′,4,4′,5,5′-HpCB	189
$^{13}C_{12}$-2,2′,3,4′,5,6,6′-HpCB	188L	2,2′,3,3′,5,5′,6-HpCB	178	$^{13}C_{12}$-2,3,3′,4,4′,5,5′-HpCB	189L	2,3,3′,4,4′,5,6-HpCB	190
$^{13}C_{12}$-2,2′,3,4′,5,6,6′-HpCB	188L	2,2′,3,3′,5,6,6′-HpCB	179	$^{13}C_{12}$-2,3,3′,4,4′,5,5′-HpCB	189L	2,3,3′,4,4′,5′,6-HpCB	191
$^{13}C_{12}$-2,2′,3,4′,5,6,6′-HpCB	188L	2,2′,3,4,4′,5,5′-HpCB	180	$^{13}C_{12}$-2,3,3′,4,4′,5,5′-HpCB	189L	2,3,3′,4,5,5′,6-HpCB	192
$^{13}C_{12}$-2,2′,3,4′,5,6,6′-HpCB	188L	2,2′,3,4,4′,5,6-HpCB	181	$^{13}C_{12}$-2,3,3′,4,4′,5,5′-HpCB	189L	2,3,3′,4′,5,5′,6-HpCB	193
OcCBs				**NoCBs**			
$^{13}C_{12}$-2,2′,3,3′,5,5′,6,6′-OcCB.	202L	2,2′,3,3′,4,4′,5,5′-OcCB	194	$^{13}C_{12}$-2,2′,3,3′,4,4′,5,5′,6-NoCB.	206L	2,2′,3,3′,4,4′,5,5′,6-NoCB	206
$^{13}C_{12}$-2,2′,3,3′,5,5′,6,6′-OcCB.	202L	2,2′,3,3′,4,4′,5,6-OcCB	195	$^{13}C_{12}$-2,2′,3,3′,4,4′,5,5′,6-NoCB.	206L	2,2′,3,3′,4,4′,5,6,6′-NoCB	207
$^{13}C_{12}$-2,2′,3,3′,5,5′,6,6′-OcCB.	202L	2,2′,3,3′,4,4′,5,6′-OcCB	196	$^{13}C_{12}$-2,2′,3,3′,4,5,5′,6,6′-NoCB.	208L	2,2′,3,3′,4,5,5′,6,6′- NoCB	208
$^{13}C_{12}$-2,2′,3,3′,5,5′,6,6′-OcCB.	202L	2,2′,3,3′,4,4′,6,6′-OcCB	197	**DeCB**			
$^{13}C_{12}$-2,2′,3,3′,5,5′,6,6′-OcCB.	202L	2,2′,3,3′,4,5,5′,6-OcCB	198	$^{13}C_{12}$-DeCB	209L	2,2′,3,3′,4,4′,5,5′,6,6′-DeCB	209
$^{13}C_{12}$-2,2′,3,3′,5,5′,6,6′-OcCB.	202L	2,2′,3,3′,4,5,5′,6′-OcCB	199				
$^{13}C_{12}$-2,2′,3,3′,5,5′,6,6′-OcCB.	202L	2,2′,3,3′,4,5,6,6′-OcCB	200				
$^{13}C_{12}$-2,2′,3,3′,5,5′,6,6′-OcCB.	202L	2,2′,3,3′,4,5′,6,6′-OcCB	201				
$^{13}C_{12}$-2,2′,3,3′,5,5′,6,6′-OcCB.	202L	2,2′,3,3′,5,5′,6,6′-OcCB	202				
$^{13}C_{12}$-2,3′,3′,4,4′,5,5′,6-OcCB.	205L	2,2′,3,4,4′,5,5′,6-OcCB	203				
$^{13}C_{12}$-2,3′,3′,4,4′,5,5′,6-OcCB.	205L	2,2′,3,4,4′,5,6,6′-OcCB	204				
$^{13}C_{12}$-2,3′,3′,4,4′,5,5′,6-OcCB.	205L	2,3,3′,4,4′,5,5′,6-OcCB	205				

[a] Assignments assume the use of the SPB-Octyl column. In the event you choose another column, you may select the labeled standard having the same number of chlorine substituents and the closest retention time to the target analyte in question as the labeled standard to use for quantitation.

[b] BZ No.: Ballschmiter and Zell 1980, also referred to as IUPAC number.

Appendix B to Method 23

Preparation of XAD–2 Adsorbent Resin

1.0 Scope and Application

XAD–2® resin, as supplied by the original manufacturer, is impregnated with a bicarbonate solution to inhibit microbial growth during storage. Remove both the salt solution and any residual extractable chemicals used in the polymerization process before use. Prepare the resin by a series of water and organic extractions, followed by careful drying.

2.0 Extraction

2.1 You may perform the extraction using a Soxhlet extractor or other apparatus that generates resin meeting the requirements in Section 13.14 of Method 23. Use an all-glass thimble containing an extra-coarse frit for extraction of the resin. The frit is recessed 10–15 mm above a crenellated ring at the bottom of the thimble to facilitate drainage. Because the resin floats on methylene chloride, carefully retain the resin in the extractor cup with a glass wool plug and stainless-steel screen. This process involves sequential extraction with the following recommended solvents in the listed order.

- Water initial rinse: Place resin in a suitable container, soak for approximately 5 min with Type II water, remove fine floating resin particles and discard the water. Fill with Type II water a second time, let stand overnight, remove fine floating resin particles and discard the water.
- Hot water: Extract with water for 8 hr.
- Methyl alcohol: Extract for 22 hr.
- Methylene chloride: Extract for 22 hr.
- Toluene: Extract for 22 hr.
- Toluene (fresh): Extract for 22 hr.

Note: You may store the resin in a sealed glass container filled with toluene prior to the final toluene extraction. It may be necessary to repeat the final toluene extractions to meet the requirements in Section 13.14 of Method 23.

2.2 You may use alternative extraction procedures to clean large batches of resin. Any size extractor may be constructed; the choice depends on the needs of the sampling programs. The resin is held in a glass or stainless-steel cylinder between a pair of coarse and fine screens. Spacers placed under the bottom screen allow for even distribution of clean solvent. Clean solvent is circulated through the resin for extraction. A flow rate is maintained upward through the resin to allow maximum solvent contact and prevent channeling.

2.2.1 Experience has shown that 1 mL/g of resin extracted is the minimum necessary to extract and clean the resin. The aqueous rinse is critical to the subsequent organic rinses and may be accomplished by simply flushing the canister with about 1 liter of distilled water for every 25 g of resin. A small pump may be useful for pumping the water through the canister. You should perform the water extraction at the rate of about 20 to 40 mL/min.

2.2.2 All materials of construction are glass, PTFE, or stainless steel. Pumps, if used, should not contain extractable materials.

3.0 Drying

3.1 Dry the adsorbent of extraction solvent before use. This section provides a recommended procedure to dry adsorbent that is wet with solvent. However, you may use other procedures if the cleanliness requirements in Sections 13.2 and 13.14 of Method 23 are met.

3.2 Drying Column. A simple column with suitable retainers, as shown in Figure A–2, will hold all the XAD–2 from the extractor shown in Figure A–1 or the Soxhlet extractor, with sufficient space for drying the bed while generating a minimum backpressure in the column.

3.3 Drying Procedure: Dry the adsorbent using clean inert gas. Liquid nitrogen from a standard commercial liquid nitrogen cylinder has proven to be a reliable source of large volumes of gas free from organic contaminants. You may use high-purity tank nitrogen to dry the resin. However, you should pass the high-purity nitrogen through a bed of activated charcoal approximately 150 mL in volume prior to entering the drying apparatus.

3.3.1 Connect the gas vent of a liquid nitrogen cylinder or the exit of the activated carbon scrubber to the column by a length of precleaned copper tubing (*e.g.,* 0.95 cm ID) coiled to pass through a heat source. A convenient heat source is a water bath heated from a steam line. The final nitrogen temperature should only be warm to the touch and not over 40 °C.

3.3.2 Allow the toluene to drain from the resin prior to placing the resin in the drying apparatus.

3.3.3 Flow nitrogen through the drying apparatus at a rate that does not fluidize or agitate the resin. Continue the nitrogen flow until the residual solvent is removed.

Note: Experience has shown that about 500 g of resin may be dried overnight by consuming a full 160–L cylinder of liquid nitrogen.

4.0 Quality Control Procedures

4.1 Report quality control results for the batch. Re-extract the batch if the residual extractable organics fail the criteria in Section 13.14 of Method 23.

4.2 Residual Toluene Quality Check. If adsorbent resin is cleaned or recleaned by the laboratory, perform a quality control check for residual toluene. The maximum acceptable concentration of toluene is 1000 µg/g of adsorbent. If the adsorbent exceeds this level, continue drying until the excess toluene is removed.

4.2.1 Extraction. Weigh 1.0 g sample of dried resin into a small vial, add 3 mL of methylene chloride, cap the vial, and shake it well.

4.2.2 Analysis. Inject a 2-µl sample of the extract into a gas chromatograph operated to provide separation between the methylene chloride extraction solvent and toluene.

4.2.2.1 Typical GC conditions to accomplish this performance requirement include, but are not limited to:

- *Column:* Sufficient to separate extraction solvents used to verify adsorbent has been sufficiently dried (*i.e.,* gas chromatographic fused-silica capillary column coated with a slightly polar silicone).
- *Carrier Gas:* Typically, helium at a rate appropriate for the column selected. Other carrier gases are allowed if the performance criteria in Method 23 are met.
- *Injection Port Temperature:* 250 °C.
- *Detector:* Flame ionization detector or an MS installed on a GC able to separate methylene chloride and toluene.
- *Oven Temperature Profile:* Typically, 30 °C for 4 min; programmed to rise at 20 °C/min until the oven reaches 250 °C; return to 30 °C after 17 minutes. You may adjust the initial temperature, hold time, program rate, and final temperature to ensure separation of extraction solvent from toluene.

4.2.2.2 Compare the results of the analysis to the results from a toluene calibration standard at a concentration of 0.22 µl/mL (22 µl/100 mL) of methylene chloride. This concentration corresponds to maximum acceptable toluene concentration in the dry adsorbent of 1,000 µg/g of adsorbent. If the adsorbent exceeds this level, continue drying until the excess toluene is removed.

BILLING CODE 6560–50–P

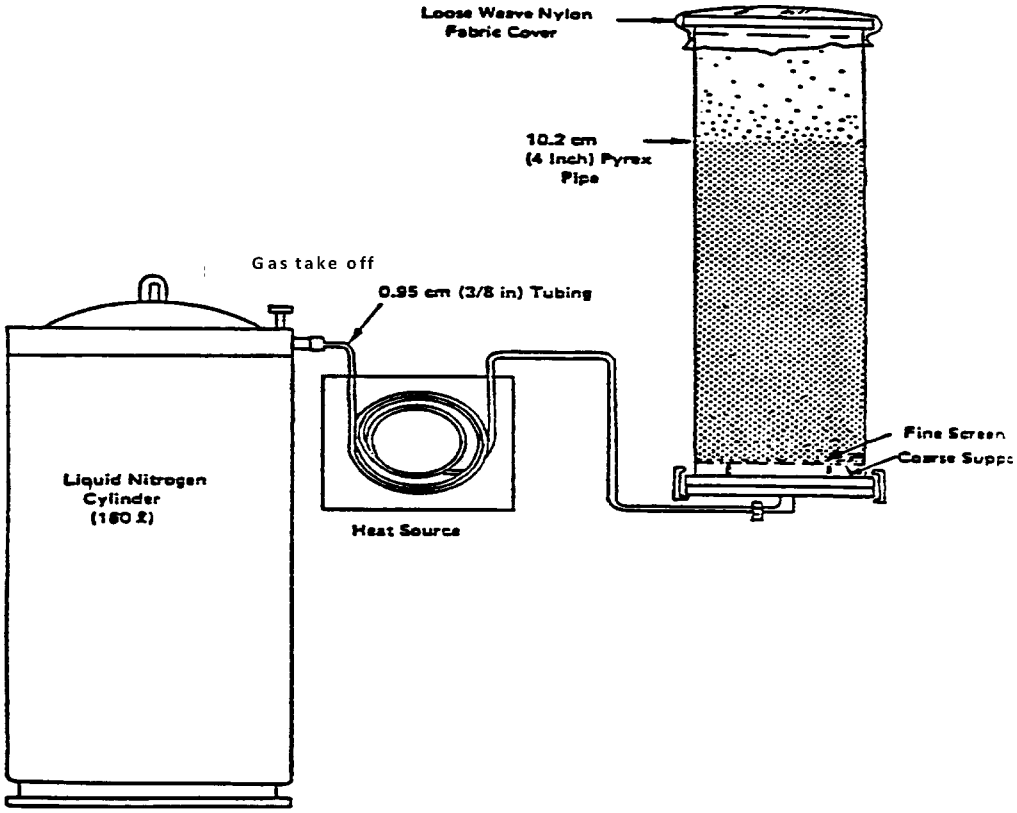

Figure A–1. XAD-2 fluidized-bed drying apparatus

BILLING CODE 6560–50–C

PART 63—NATIONAL EMISSION STANDARDS FOR HAZARDOUS AIR POLLUTANTS FOR SOURCE CATEGORIES

■ 6. The authority citation for part 63 continues to read as follows:

Authority: 42 U.S.C. 7401 *et seq.*

■ 7. In § 63.849, revise paragraphs (a)(13) and (a)(14) to read as follows:

§ 63.849 Test methods and procedures.

* * * * *

(a) * * *

(13) Method 23 of Appendix A–7 of 40 CFR part 60 for the measurement of Polychlorinated Biphenyls (PCBs) where stack or duct emissions are sampled; and

(14) Method 23 of appendix A–7 of 40 CFR part 60 and Method 14 or Method 14A in appendix A to part 60 of this chapter or an approved alternative method for the concentration of PCB where emissions are sampled from roof monitors not employing wet roof scrubbers.

* * * * *

■ 8. In § 63.1208, revise paragraph (b)(1) to read as follows:

§ 63.1208 What are the test methods?

* * * * *

(b) * * *

(1) *Dioxins and furans.* (i) To determine compliance with the emission standard for dioxins and furans, you must use:

(A) Method 0023A, Sampling Method for Polychlorinated Dibenzo-p-Dioxins and Polychlorinated Dibenzofurans emissions from Stationary Sources, EPA Publication SW–846 (incorporated by reference—see § 63.14); or

(B) Method 23, provided in appendix A, part 60 of this chapter.

(ii) You must sample for a minimum of three hours, and you must collect a minimum sample volume of 2.5 dscm;

(iii) You may assume that nondetects are present at zero concentration.

* * * * *

■ 9. In § 63.1625, revise paragraph (b)(10) to read as follows:

§ 63.1625 What are the performance test and compliance requirements for new, reconstructed, and existing facilities?

* * * * *

(b) * * *

(10) Method 23 of appendix A–7 of 40 CFR part 60 to determine PAH.

* * * * *

■ 10. In table 3 to subpart AAAAAAA of part 63 revise the entry ''6. Measuring the PAH emissions'' to read as follows:

TABLE 3 TO SUBPART AAAAAAA OF PART 63—TEST METHODS

For * * *	You must use * * *
* * * * *	
6. Measuring the PAH emissions.	EPA test method 23.

* * * * *

PART 266—STANDARDS FOR THE MANAGEMENT OF SPECIFIC HAZARDOUS WASTES AND SPECIFIC TYPES OF HAZARDOUS WASTE MANAGEMENT FACILITIES

■ 11. The authority citation for part 266 continues to read as follows:

Authority: 42 U.S.C. 1006, 2002(a), 3001–3009, 3014, 3017, 6905, 6906, 6912, 6921, 6922, 6924–6927, 6934, and 6937.

■ 12. In § 266.104, revise paragraph (e)(1) to read as follows:

§ 266.104 Standards to control organic emissions.

* * * * *

(e) * * *

(1) During the trial burn (for new facilities or an interim status facility applying for a permit) or compliance test (for interim status facilities), determine emission rates of the tetra-octa congeners of chlorinated dibenzo-p-dioxins and dibenzofurans (CDDs/CDFs) using Method 0023A, Sampling Method for Polychlorinated Dibenzo-p-Dioxins and Polychlorinated Dibenzofurans Emissions from Stationary Sources, EPA Publication SW–826, as incorporated by reference in § 266.11 of this chapter or Method 23, provided in appendix A–7, part 60 of this chapter.

* * * * *

[FR Doc. 2019–27842 Filed 1–13–20; 8:45 am]

BILLING CODE 6560–50–P

Reader Aids

Federal Register

Vol. 85, No. 9

Tuesday, January 14, 2020

CUSTOMER SERVICE AND INFORMATION

Federal Register/Code of Federal Regulations	
General Information, indexes and other finding aids	**202–741–6000**
Laws	**741–6000**
Presidential Documents	
Executive orders and proclamations	**741–6000**
The United States Government Manual	**741–6000**
Other Services	
Electronic and on-line services (voice)	**741–6020**
Privacy Act Compilation	**741–6050**

ELECTRONIC RESEARCH

World Wide Web

Full text of the daily Federal Register, CFR and other publications is located at: **www.govinfo.gov.**

Federal Register information and research tools, including Public Inspection List and electronic text are located at: **www.federalregister.gov.**

E-mail

FEDREGTOC (Daily Federal Register Table of Contents Electronic Mailing List) is an open e-mail service that provides subscribers with a digital form of the Federal Register Table of Contents. The digital form of the Federal Register Table of Contents includes HTML and PDF links to the full text of each document.

To join or leave, go to **https://public.govdelivery.com/accounts/USGPOOFR/subscriber/new**, enter your email address, then follow the instructions to join, leave, or manage your subscription.

PENS (Public Law Electronic Notification Service) is an e-mail service that notifies subscribers of recently enacted laws.

To subscribe, go to **http://listserv.gsa.gov/archives/publaws-l.html and select** *Join or leave the list (or change settings);* then follow the instructions.

FEDREGTOC and **PENS** are mailing lists only. We cannot respond to specific inquiries.

Reference questions. Send questions and comments about the Federal Register system to: **fedreg.info@nara.gov**

The Federal Register staff cannot interpret specific documents or regulations.

FEDERAL REGISTER PAGES AND DATE, JANUARY

1–206 2
207–418 3
419–636 6
637–824 7
825–1082 8
1083–1266 9
1267–1730 10
1731–2002 13
2003–2278 14

CFR PARTS AFFECTED DURING JANUARY

At the end of each month the Office of the Federal Register publishes separately a List of CFR Sections Affected (LSA), which lists parts and sections affected by documents published since the revision date of each title.

3 CFR

Proclamations:
9975 633
Executive Orders:
13902 2003

5 CFR

532 ..... 419, 637
Proposed Rules:
831 467
842 467

7 CFR

97 422
922 638
1260 825
1468 558
1484 1083
1485 1731

9 CFR

Proposed Rules:
201 1771

10 CFR

72 1096
207 827
218 827
429 ..... 827, 1378, 1504
430 1378
431 ..... 827, 1378, 1504, 1592
490 827
501 827
601 827
820 827
824 827
851 827
1013 827
1017 827
1050 827
Proposed Rules:
50 852
72 1129

12 CFR

263 2007
747 2009
1083 2012
Proposed Rules:
3 1052
4 1052
11 1052
16 1052
19 1052
23 1052
25 ..... 1204, 1285
26 1052
32 1052
108 1052
112 1052
141 1052
160 1052
161 1052
163 1052
192 1052
195 1204
345 1204
620 647

13 CFR

Proposed Rules:
120 1783
121 1289
124 1289
125 1289
126 1289
127 1289
134 1289

14 CFR

11 1747
25 640
39 ..... 433, 436, 439, 443, 449, 451, 453, 457
71 ..... 1267, 1268
300 1747
302 1747
Proposed Rules:
39 ..... 23, 469, 1290, 1292, 1295
382 27

15 CFR

6 207
90 1100
774 459

16 CFR

1 2014

17 CFR

143 1747
Proposed Rules:
23 951

18 CFR

250 2016
381 1102
385 2016
Proposed Rules:
35 265

20 CFR

651 592
652 592
653 592
658 592

21 CFR

890 2018
1308 643

22 CFR

35 2020
103 2020

127 2020
138 2020

23 CFR

Proposed Rules:
650 1793

24 CFR

Proposed Rules:
5 2041
91 2041
92 2041
570 2041
574 2041
576 2041
903 2041
905 2041

25 CFR

11 645

Proposed Rules:
82 37

26 CFR

1 ....192, 1866

Proposed Rules:
1 2061

30 CFR

56 2022
57 2022

Proposed Rules:
56 2064
57 2064

31 CFR

148 1

31 CFR

Proposed Rules:
210 265

33 CFR

100 ....1103, 2027
165 ....210, 212, 214, 216, 218, 222, 2031

Proposed Rules:
100 2069
165 271
167 1793

34 CFR

36 2033
668 2033

Proposed Rules:
Ch. II 853

37 CFR

390 831

39 CFR

20 ....462, 1103
111 1750
233 2036

Proposed Rules:
111 856

40 CFR

9 1104
19 1751
52 3
58 834
62 ....1119, 1121, 1124
257 1269
271 2038
282 1277
721 1104

Proposed Rules:
52 ....54, 59, 274, 1131, 1794, 1796
60 2234
63 2234
266 2234
282 1297
1500 1684
1501 1684
1502 1684
1503 1684
1504 1684
1505 1684
1506 1684
1507 1684
1508 1684

43 CFR

2 1282

42 CFR

402 7
403 ....7, 8
405 224
409 8
410 ....8, 224
411 ....7, 8
412 ....7, 224
414 ....8, 224
415 8
416 ....8, 224
418 8
419 224
422 7
423 7
424 8
425 8
460 7
483 7
488 7
486 224
489 8
493 7
498 8

44 CFR

206 2038

45 CFR

1149 1757
1158 1757

Proposed Rules:
147 276
158 276
2522 859
2540 859

46 CFR

506 1760

47 CFR

1 837
20 837
27 1284
43 837
54 ....230, 838, 1761
64 ....462, 1125

Proposed Rules:
16 2078
51 472
54 ....61, 277
64 1134
73 649
76 656
Ch. I 1798

48 CFR

552 1127

Proposed Rules:
227 2101
239 2101
252 2101
1812 663
1831 663
1846 663
1852 663

49 CFR

1 1747
5 1747
7 1747
106 1747
211 1747
243 10
389 1747
553 1747
601 1747
1022 838

Proposed Rules:
565 792
566 792
567 792
586 792

50 CFR

17 164
218 1770
300 ....840, 2039
600 ....250, 840
635 ....14, 17
679 ....19, 840, 850

Proposed Rules:
17 ....487, 862, 1018
648 285

LIST OF PUBLIC LAWS

Note: No public bills which have become law were received by the Office of the Federal Register for inclusion in today's **List of Public Laws**.

Last List January 10, 2020

Public Laws Electronic Notification Service (PENS)

PENS is a free electronic mail notification service of newly enacted public laws. To subscribe, go to *http://listserv.gsa.gov/archives/publaws-l.html*

Note: This service is strictly for E-mail notification of new laws. The text of laws is not available through this service. **PENS** cannot respond to specific inquiries sent to this address.