AUTHENTICATED
U.S. GOVERNMENT
INFORMATION
GPO

FEDERAL REGISTER

Vol. 84 Monday,
No. 189 September 30, 2019

Pages 51365–51936

OFFICE OF THE FEDERAL REGISTER

The **FEDERAL REGISTER** (ISSN 0097–6326) is published daily, Monday through Friday, except official holidays, by the Office of the Federal Register, National Archives and Records Administration, under the Federal Register Act (44 U.S.C. Ch. 15) and the regulations of the Administrative Committee of the Federal Register (1 CFR Ch. I). The Superintendent of Documents, U.S. Government Publishing Office, is the exclusive distributor of the official edition. Periodicals postage is paid at Washington, DC.

The **FEDERAL REGISTER** provides a uniform system for making available to the public regulations and legal notices issued by Federal agencies. These include Presidential proclamations and Executive Orders, Federal agency documents having general applicability and legal effect, documents required to be published by act of Congress, and other Federal agency documents of public interest.

Documents are on file for public inspection in the Office of the Federal Register the day before they are published, unless the issuing agency requests earlier filing. For a list of documents currently on file for public inspection, see *www.federalregister.gov.*

The seal of the National Archives and Records Administration authenticates the Federal Register as the official serial publication established under the Federal Register Act. Under 44 U.S.C. 1507, the contents of the **Federal Register** shall be judicially noticed.

The **Federal Register** is published in paper and on 24x microfiche. It is also available online at no charge at *www.govinfo.gov*, a service of the U.S. Government Publishing Office.

The online edition of the **Federal Register** is issued under the authority of the Administrative Committee of the Federal Register as the official legal equivalent of the paper and microfiche editions (44 U.S.C. 4101 and 1 CFR 5.10). It is updated by 6:00 a.m. each day the **Federal Register** is published and includes both text and graphics from Volume 1, 1 (March 14, 1936) forward. For more information, contact the GPO Customer Contact Center, U.S. Government Publishing Office. Phone 202-512-1800 or 866-512-1800 (toll free). E-mail, *gpocusthelp.com.*

The annual subscription price for the **Federal Register** paper edition is $860 plus postage, or $929, for a combined **Federal Register, Federal Register** Index and List of CFR Sections Affected (LSA) subscription; the microfiche edition of the **Federal Register** including the **Federal Register** Index and LSA is $330, plus postage. Six month subscriptions are available for one-half the annual rate. The prevailing postal rates will be applied to orders according to the delivery method requested. The price of a single copy of the daily **Federal Register,** including postage, is based on the number of pages: $11 for an issue containing less than 200 pages; $22 for an issue containing 200 to 400 pages; and $33 for an issue containing more than 400 pages. Single issues of the microfiche edition may be purchased for $3 per copy, including postage. Remit check or money order, made payable to the Superintendent of Documents, or charge to your GPO Deposit Account, VISA, MasterCard, American Express, or Discover. Mail to: U.S. Government Publishing Office—New Orders, P.O. Box 979050, St. Louis, MO 63197-9000; or call toll free 1-866-512-1800, DC area 202-512-1800; or go to the U.S. Government Online Bookstore site, see *bookstore.gpo.gov.*

There are no restrictions on the republication of material appearing in the **Federal Register.**

How To Cite This Publication: Use the volume number and the page number. Example: 84 FR 12345.

Postmaster: Send address changes to the Superintendent of Documents, Federal Register, U.S. Government Publishing Office, Washington, DC 20402, along with the entire mailing label from the last issue received.

SUBSCRIPTIONS AND COPIES

PUBLIC

Subscriptions:

Paper or fiche	**202–512–1800**
Assistance with public subscriptions	**202–512–1806**

General online information **202–512–1530; 1–888–293–6498**

Single copies/back copies:

Paper or fiche	**202–512–1800**
Assistance with public single copies	**1–866–512–1800 (Toll-Free)**

FEDERAL AGENCIES

Subscriptions:

Assistance with Federal agency subscriptions:

Email	*FRSubscriptions@nara.gov*
Phone	**202–741–6000**

The Federal Register Printing Savings Act of 2017 (Pub. L. 115-120) placed restrictions on distribution of official printed copies of the daily **Federal Register** to members of Congress and Federal offices. Under this Act, the Director of the Government Publishing Office may not provide printed copies of the daily **Federal Register** unless a Member or other Federal office requests a specific issue or a subscription to the print edition. For more information on how to subscribe use the following website link: *https://www.gpo.gov/frsubs.*

Printed on recycled paper.

Contents

Federal Register

Vol. 84, No. 189

Monday, September 30, 2019

Agriculture Department
See Food and Nutrition Service
See Forest Service

Air Force Department
RULES
Determination:
Active Military Service and Discharge for Civilian or Contractual Groups, 51401–51402

Army Department
NOTICES
Agency Information Collection Activities; Proposals, Submissions, and Approvals, 51525–51526
Meetings:
Board of Visitors, United States Military Academy, 51524–51525

Centers for Disease Control and Prevention
NOTICES
Agency Information Collection Activities; Proposals, Submissions, and Approvals, 51586–51590
Meetings:
Healthcare Infection Control Practices Advisory Committee, 51588

Centers for Medicare & Medicaid Services
RULES
Medicare and Medicaid Programs:
Regulatory Provisions to Promote Program Efficiency, Transparency, and Burden Reduction; Fire Safety Requirements for Certain Dialysis Facilities; Hospital and Critical Access Hospital Changes to Promote Innovation, Flexibility, and Improvement in Patient Care, 51732–51834
Revisions to Requirements for Discharge Planning for Hospitals, Critical Access Hospitals, and Home Health Agencies, and Hospital and Critical Access Hospital Changes to Promote Innovation, Flexibility, and Improvement in Patient Care, 51836–51884
NOTICES
Agency Information Collection Activities; Proposals, Submissions, and Approvals, 51590–51591
Medicare, Medicaid, and CLIA Programs:
Clinical Laboratory Improvement Amendments of 1988 Exemption of Laboratories Licensed by the State of Washington, 51591–51594
Performance Review Board Membership, 51594

Coast Guard
RULES
Safety Zones:
Grand Haven Fireworks, Lake Michigan, Grand Haven, MI, 51405–51407
Leif Erickson Day Row and Run, Charlevoix, MI, 51407–51409
Mackinaw City Fall Colors Fireworks, Mackinaw City, MI, 51409–51411
Saint Simons Sound, GA, 51411–51413
Special Local Regulations:
Kailua Bay, Ironman World Championship, Kailua-Kona, HI, 51402–51405

Commerce Department
See International Trade Administration
See National Oceanic and Atmospheric Administration
See Patent and Trademark Office

Commodity Futures Trading Commission
NOTICES
Agency Information Collection Activities; Proposals, Submissions, and Approvals, 51522–51523

Comptroller of the Currency
NOTICES
Agency Information Collection Activities; Proposals, Submissions, and Approvals:
Licensing Manual, 51711–51712

Corporation for National and Community Service
NOTICES
Agency Information Collection Activities; Proposals, Submissions, and Approvals:
Generic Clearance for the Collection of Qualitative Feedback on Agency Service Delivery, 51524

Defense Department
See Air Force Department
See Army Department
See Navy Department
NOTICES
Agency Information Collection Activities; Proposals, Submissions, and Approvals, 51526–51528

Drug Enforcement Administration
RULES
New Single-Sheet Format for U.S. Official Order Form for Schedule I and II Controlled Substances, 51368–51377

Education Department
NOTICES
Agency Information Collection Activities; Proposals, Submissions, and Approvals:
Application for Asian American and Native American Pacific Islander-Serving Institutions Program, 51529–51530

Employee Benefits Security Administration
NOTICES
Proposed Exemption from Certain Prohibited Transaction Restrictions:
UBS Asset Management (Americas), Inc; UBS Realty Investors, LLC; UBS Hedge Fund Solutions, LLC; et al., 51621–51635

Employment and Training Administration
NOTICES
Agency Information Collection Activities; Proposals, Submissions, and Approvals:
Registered Apprenticeship College Consortium, 51635–51636

Energy Department
See Federal Energy Regulatory Commission
See Southwestern Power Administration

PROPOSED RULES
Energy Conservation Program:
Standards for Unfired Hot Water Storage Tanks, 51467
Test Procedure for Ceiling Fans, 51440–51466
NOTICES
Application to Export Electric Energy:
Macquarie Energy, LLC, 51530

Environmental Protection Agency
RULES
Air Quality State Implementation Plans; Approvals and Promulgations:
Missouri; Infrastructure State Implementation Plan Requirements for the 2015 Ozone National Ambient Air Quality Standard, 51413–51415
Missouri; Operating Permits Program, and 112(l) Plan; Operating Permits, 51418–51420
North Carolina: Amendments of Air Quality Rules, 51416–51418
Pennsylvania; Redesignation Requests and Maintenance Plans for Delaware County and Lebanon County 2012 Fine Particulate Matter Areas, 51420–51426
NOTICES
Agency Information Collection Activities; Proposals, Submissions, and Approvals:
Environmental Impact Assessment of Nongovernmental Activities in Antarctica, 51558–51560
Cancellation Order for Certain Pesticide Registrations and Amendments to Terminate Uses, 51561–51564
Final Test Guideline; Series 810—Product Performance Test Guideline, 51557–51558
Meetings:
Chartered Clean Air Scientific Advisory Committee, 51555–51556
Pesticide Product Registration:
Applications for New Uses (August 2019), 51556–51557
Registration Review:
Draft Human Health and/or Ecological Risk Assessments for Several Pesticides, 51560–51561

Export-Import Bank
NOTICES
Agency Information Collection Activities; Proposals, Submissions, and Approvals, 51564–51566

Federal Aviation Administration
PROPOSED RULES
Airworthiness Directives:
Embraer S.A. Airplanes, 51469–51471
NOTICES
Meetings:
Drone Advisory Committee, 51709–51710

Federal Bureau of Investigation
NOTICES
Meetings:
Compact Council for the National Crime Prevention and Privacy Compact, 51620

Federal Communications Commission
PROPOSED RULES
Completing the Transition to Electronic Filing, Licenses and Authorizations, and Correspondence in the Wireless Radio Services, 51502–51507

Federal Deposit Insurance Corporation
PROPOSED RULES
Rescission of Policy Statements, 51467–51469
NOTICES
Agency Information Collection Activities; Proposals, Submissions, and Approvals, 51566–51569

Federal Emergency Management Agency
NOTICES
Flood Hazard Determinations, 51610–51611
Flood Hazard Determinations; Proposals, 51611–51613

Federal Energy Regulatory Commission
NOTICES
Combined Filings, 51531–51532, 51535–51536
Environmental Assessments; Availability, etc.:
Kinder Morgan Louisiana Pipeline, LLC; Columbia Gulf Transmission, LLC, 51533–51534
Initial Market-Based Rate Filings Including Requests for Blanket Section 204 Authorizations:
Power Supply Partners, LLC, 51534–51535
Institution of Section 206 Proceeding and Refund Effective Date:
York Haven Power Co., LLC; Lake Lynn Generation, LLC, 51535
Meetings:
Great Falls Hydroelectric Co.; City of Paterson, NJ, 51536–51537
Permit Application:
Premium Energy Holdings, LLC, 51532–51533

Federal Motor Carrier Safety Administration
RULES
General Technical, Organizational, Conforming, and Correcting Amendments to the Federal Motor Carrier Safety Regulations, 51427–51435

Federal Register Office
NOTICES
Publication Procedures for Federal Register Documents During a Funding Hiatus, 51641–51642

Federal Reserve System
NOTICES
Agency Information Collection Activities; Proposals, Submissions, and Approvals, 51569–51572

Federal Transit Administration
NOTICES
Early Scoping, 51710

Food and Drug Administration
NOTICES
Fee for Using a Material Threat Medical Countermeasure Priority Review Voucher in Fiscal Year 2020, 51597–51599
Fee for Using a Rare Pediatric Disease Priority Review Voucher in Fiscal Year 2020, 51599–51601
Fee for Using a Tropical Disease Priority Review Voucher in Fiscal Year 2020, 51601–51603
Guidance:
Demonstrating Bioequivalence for Soluble Powder Oral Dosage Form Products and Type A Medicated Articles Manufactured from Active Pharmaceutical Ingredients Considered to be Soluble in Aqueous Media, 51595–51597
Eligibility Criteria for Expanded Conditional Approval of New Animal Drugs, 51594–51595

Food and Nutrition Service
NOTICES
Agency Information Collection Activities; Proposals, Submissions, and Approvals:
Survey of SNAP and Work, 51508–51509

Forest Service
NOTICES
Proposed New Recreation Fees:
George Washington and Jefferson National Forests, 51509–51510

General Services Administration
NOTICES
Agency Information Collection Activities; Proposals, Submissions, and Approvals:
Federal Supply Schedule Pricing Disclosures and Sales Reporting, 51578–51586
Transactional Data Reporting, 51573–51578

Health and Human Services Department
See Centers for Disease Control and Prevention
See Centers for Medicare & Medicaid Services
See Food and Drug Administration
See Health Resources and Services Administration
See National Institutes of Health
See Substance Abuse and Mental Health Services Administration
NOTICES
Agency Information Collection Activities; Proposals, Submissions, and Approvals, 51604–51606
Meetings:
National Committee on Vital and Health Statistics, 51603–51604

Health Resources and Services Administration
NOTICES
Meetings:
National Advisory Council on Nurse Education and Practice, 51603

Homeland Security Department
See Coast Guard
See Federal Emergency Management Agency

Housing and Urban Development Department
NOTICES
Agency Information Collection Activities; Proposals, Submissions, and Approvals
Generic Customer Satisfaction Surveys, 51613–51614

Interior Department
See National Park Service
See Reclamation Bureau

Internal Revenue Service
PROPOSED RULES
Application of the Employer Shared Responsibility Provisions and Certain Nondiscrimination Rules to Health Reimbursement Arrangements and Other Account-Based Group Health Plans Integrated with Individual Health Insurance Coverage or Medicare, 51471–51490
NOTICES
Agency Information Collection Activities; Proposals, Submissions, and Approvals, 51712–51726

International Trade Administration
NOTICES
Antidumping or Countervailing Duty Investigations, Orders, or Reviews:
Biodiesel from Indonesia, 51514–51515
Chlorinated Isocyanurates from Spain, 51511–51513
Crystalline Silicon Photovoltaic Cells, Whether or Not Assembled into Modules, from the People's Republic of China, 51513
Oil Country Tubular Goods from Ukraine, 51510–51511
Polyethylene Terephthalate Film Sheet, and Strip from India, 51514
Stainless Steel Sheet and Strip from the People's Republic of China, 51513–51514

International Trade Commission
NOTICES
Investigations; Determinations, Modifications, and Rulings, etc.:
Small Diameter Graphite Electrodes from China, 51619–51620

Justice Department
See Drug Enforcement Administration
See Federal Bureau of Investigation
NOTICES
Agency Information Collection Activities; Proposals, Submissions, and Approvals:
United States Victims of State Sponsored Terrorism Fund Application Form, 51620–51621

Labor Department
See Employee Benefits Security Administration
See Employment and Training Administration
See Mine Safety and Health Administration
See Occupational Safety and Health Administration
See Veterans Employment and Training Service
NOTICES
Agency Information Collection Activities; Proposals, Submissions, and Approvals:
Cleanup Program for Accumulations of Coal and Float Coal Dusts, Loose Coal, and Other Combustibles, 51636–51637
Coal Mine Dust Sampling Devices, 51637–51638
Employment and Training Administration—Financial Report Form, 51638–51639

Maritime Administration
NOTICES
Voluntary Intermodal Sealift Agreement—Five Year Extension, 51710–51711

Mine Safety and Health Administration
RULES
Examinations of Working Places in Metal and Nonmetal Mines, 51400–51401

National Aeronautics and Space Administration
NOTICES
Meetings:
Advisory Council; Regulatory and Policy Committee, 51641
Advisory Council; Science Committee, 51641

National Archives and Records Administration
See Federal Register Office
NOTICES
Records Schedule, 51642–51643

National Institutes of Health
NOTICES
Meetings:
Center for Scientific Review, 51607–51608
National Heart, Lung, and Blood Institute, 51606–51607
Organizational Change:
National Institute of Neurological Disorders and Stroke, 51606

National Oceanic and Atmospheric Administration
RULES
Fisheries of the Northeastern United States; Scup Fishery:
Adjustment to the 2019 Winter II Quota, 51438–51439
Temporary Rule to Increase the Commercial Trip Limit for Atlantic King Mackerel, 51435–51438
NOTICES
Endangered and Threatened Species:
Take of Anadromous Fish, 51518
Meetings:
Fisheries of the Gulf of Mexico; Southeast Data, Assessment, and Review, 51515–51516
Fisheries of the South Atlantic; South Atlantic Fishery Management Council, 51518–51519
Fisheries of the South Atlantic; Southeast Data, Assessment, and Review, 51517–51518
Gulf of Mexico Fishery Management Council, 51516–51517
Western Pacific Fishery Management Council, 51519–51521
Takes of Marine Mammals:
Incidental to a Low-Energy Geophysical Survey in the South Atlantic Ocean, 51886–51928

National Park Service
NOTICES
National Register of Historic Places:
Pending Nominations and Related Actions, 51614

National Science Foundation
NOTICES
Record of Decision:
Final Comprehensive Environmental Evaluation for Continuation and Modernization of McMurdo Station Area Activities in Antarctica, 51643

Navy Department
NOTICES
Agency Information Collection Activities; Proposals, Submissions, and Approvals, 51528–51529

Nuclear Regulatory Commission
RULES
Final State Agreement:
Vermont: Discontinuance of Certain Commission Regulatory Authority within the State, 51365–51367
NOTICES
License Amendment; Application:
Exelon Generation Co., LLC; Braidwood Station Units 1 and 2, 51644
Meetings; Sunshine Act, 51644

Occupational Safety and Health Administration
RULES
Occupational Exposure to Beryllium and Beryllium Compounds in Construction and Shipyard Sectors, 51377–51400
NOTICES
Meetings:
Using Leading Indicators to Improve Safety and Health Outcomes, 51639–51640

Overseas Private Investment Corporation
NOTICES
Memorandum on the Delegation of Functions and Authorities under the Better Utilization of Investments Leading to Development Act of 2018, 51645

Patent and Trademark Office
NOTICES
Agency Information Collection Activities; Proposals, Submissions, and Approvals:
Patenting Artificial Intelligence Inventions, 51522

Pension Benefit Guaranty Corporation
PROPOSED RULES
Benefit Payments and Allocation of Assets, 51494–51502
Lump Sum Payment Assumptions, 51490–51493

Postal Service
NOTICES
Product Change:
First-Class Package Service Negotiated Service Agreement, 51645
Priority Mail Express and Priority Mail Negotiated Service Agreement, 51645
Priority Mail Negotiated Service Agreement, 51645

Presidential Documents
PROCLAMATIONS
Immigration and Naturalization:
Iran, Senior Government Officials; Suspension of U.S. Entry as Immigrants and Nonimmigrants (Proc. 9932), 51935–51936
Venezuela, Democratic Institutions; Suspension of U.S. Entry of Immigrant and Nonimmigrant Persons Responsible for Policies or Actions That Threaten (Proc. 9931), 51929–51933

Reclamation Bureau
NOTICES
Privacy Act; Systems of Records, 51614–51619

Securities and Exchange Commission
NOTICES
Agency Information Collection Activities; Proposals, Submissions, and Approvals, 51645–51646, 51654, 51667–51668, 51685–51686, 51690–51693, 51696–51698
Meetings; Sunshine Act, 51696–51697
Self-Regulatory Organizations; Proposed Rule Changes:
Cboe BZX Exchange, Inc., 51649–51657
Cboe EDGA Exchange, Inc., 51657–51667
Cboe Exchange, Inc., 51673–51681, 51693–51696
Financial Industry Regulatory Authority, Inc., 51669–51671
Municipal Securities Rulemaking Board, 51698–51705
Nasdaq PHLX, LLC, 51681–51690, 51705–51707
NYSE American, LLC, 51668
NYSE Arca, Inc., 51646–51649, 51697
NYSE National, Inc., 51671–51672

Small Business Administration
NOTICES
Agency Information Collection Activities; Proposals, Submissions, and Approvals, 51708

Agency Information Collection Activities; Proposals, Submissions, and Approvals:
Evaluation of Fees on SBA's Surety Bond Guarantee Program, 51707–51708

Social Security Administration
RULES
Rules of Conduct and Standards of Responsibility for Appointed Representatives; Correction, 51367

Southwestern Power Administration
NOTICES
Integrated System Rate Schedules, 51537–51551
Robert D. Willis Hydropower Project Rate Schedule, 51553–51555
Sam Rayburn Dam Rate Schedule, 51551–51553

State Department
NOTICES
Agency Information Collection Activities; Proposals, Submissions, and Approvals:
Technology Security/Clearance Plans, Screening Records, and Non-Disclosure Agreements, 51708–51709

Substance Abuse and Mental Health Services Administration

NOTICES
Agency Information Collection Activities; Proposals, Submissions, and Approvals, 51608–51610

Transportation Department
See Federal Aviation Administration
See Federal Motor Carrier Safety Administration
See Federal Transit Administration
See Maritime Administration

Treasury Department
See Comptroller of the Currency
See Internal Revenue Service

Veterans Affairs Department
NOTICES
Agency Information Collection Activities; Proposals, Submissions, and Approvals:
HUDVA Addendum to Uniform Residential Loan Application, 51726–51727, 51729–51730
Cost-Based and Inter-Agency Billing Rates for Medical Care or Services Provided by the Department of Veterans Affairs for FY 2020, 51728–51729
Reasonable Charges for Inpatient Medical Severity-Diagnosis Related Groups and Skilled Nursing Facility Medical Services; v3.26, Fiscal Year 2020 Update, 51727–51728

Veterans Employment and Training Service
NOTICES
Agency Information Collection Activities; Proposals, Submissions, and Approvals, 51640–51641

Separate Parts In This Issue

Part II
Health and Human Services Department, Centers for Medicare & Medicaid Services, 51732–51834

Part III
Health and Human Services Department, Centers for Medicare & Medicaid Services, 51836–51884

Part IV
Commerce Department, National Oceanic and Atmospheric Administration, 51886–51928

Part V
Presidential Documents, 51929–51933, 51935–51936

Reader Aids
Consult the Reader Aids section at the end of this issue for phone numbers, online resources, finding aids, and notice of recently enacted public laws.

To subscribe to the Federal Register Table of Contents electronic mailing list, go to https://public.govdelivery.com/accounts/USGPOOFR/subscriber/new, enter your e-mail address, then follow the instructions to join, leave, or manage your subscription.

CFR PARTS AFFECTED IN THIS ISSUE

A cumulative list of the parts affected this month can be found in the Reader Aids section at the end of this issue.

3 CFR

Proclamations:

9931 51931
9932 51935

10 CFR

150 51365

Proposed Rules:

429 51440
430 51440
431 51467

12 CFR

Proposed Rules:

Ch. III 51467

14 CFR

Proposed Rules:

39 51469

20 CFR

404 51367
416 51367

21 CFR

1305 51368

26 CFR

Proposed Rules:

1 51471
54 51471

29 CFR

1915 51377
1926 51377

Proposed Rules:

4022 (2 documents) 51490, 51494
4044 51494
4062 51494

30 CFR

56 51400
57 51400

32 CFR

881 51401

33 CFR

100 51402
165 (4 documents) 51405, 51407, 51409, 51411

40 CFR

52 (4 documents) 51413, 51416, 51418, 51420
70 51418
81 51420

42 CFR

403 51732
416 51732
418 51732
441 51732
460 51732
482 (2 documents) 51732, 51836
483 51732
484 (2 documents) 51732, 51836
485 (2 documents) 51732, 51836
486 51732
488 51732
491 51732
494 51732

47 CFR

Proposed Rules:

1 51502
17 51502

49 CFR

325 51427
350 51427
365 51427
380 51427
382 51427
383 51427
385 51427
387 51427
389 51427
391 51427
392 51427
395 51427
396 51427

50 CFR

622 51435
648 51438

Rules and Regulations

Federal Register
Vol. 84, No. 189
Monday, September 30, 2019

This section of the FEDERAL REGISTER contains regulatory documents having general applicability and legal effect, most of which are keyed to and codified in the Code of Federal Regulations, which is published under 50 titles pursuant to 44 U.S.C. 1510.

The Code of Federal Regulations is sold by the Superintendent of Documents.

NUCLEAR REGULATORY COMMISSION

10 CFR Part 150

[NRC–2019–0114]

State of Vermont: Discontinuance of Certain Commission Regulatory Authority Within the State; Notice of Agreement Between the NRC and the State of Vermont

AGENCY: Nuclear Regulatory Commission.

ACTION: Final State agreement.

SUMMARY: This notice is announcing that on September 9, 2019, Kristine L. Svinicki, Chairman of the U.S. Nuclear Regulatory Commission (NRC or Commission), and on September 13, 2019, Governor Philip B. Scott of the State of Vermont, signed an Agreement as authorized by Section 274b. of the Atomic Energy Act of 1954, as amended (the Act). Under the Agreement, the Commission discontinues its regulatory authority, and the State of Vermont assumes regulatory authority over 11e.(1), 11e.(3), and 11e.(4) byproduct materials, source materials, and special nuclear materials in quantities not sufficient to form a critical mass. As of the effective date of the Agreement, a person in Vermont possessing these materials is exempt from certain Commission regulations. The exemptions have been previously published in the **Federal Register** (FR) and are codified in the Commission's regulations. The Agreement is published here as required by Section 274e. of the Act.

DATES: The effective date of the Agreement is September 30, 2019.

ADDRESSES: Please refer to Docket ID NRC–2019–0114 when contacting the NRC about the availability of information regarding this document. You may obtain publicly-available information related to this document using any of the following methods:

- *Federal Rulemaking Website:* Go to *https://www.regulations.gov/* and search for Docket ID NRC–2019–0114. Address questions about docket IDs in *Regulations.gov* to Jennifer Borges; telephone: 301–287–9127; email: *Jennifer.Borges@nrc.gov.* For technical questions, contact the individual listed in the **FOR FURTHER INFORMATION CONTACT** section of this document.
- *NRC's Agencywide Documents Access and Management System (ADAMS):* You may obtain publicly available documents online in the ADAMS Public Document collection at *https://www.nrc.gov/reading-rm/adams.html.* To begin the search, select ''Begin Web-based ADAMS Search''. For problems with ADAMS, contact the NRC's public document room (PDR) reference staff at 1–800–397–4209, 301–415–4737, or by email to *pdr.resource@nrc.gov.* The ADAMS Accession numbers for the request for an Agreement by the Governor of Vermont, including all information and documentation submitted in support of the request, and the NRC staff assessment are: ML19109A085, ML19107A432, ML19114A092, ML19140A393, ML19102A130, ML19161A133, and ML19192A115 (SECY–19–0085, includes final staff assessment).
- *NRC's PDR:* The public may examine and purchase copies of public documents at the NRC's PDR, Room O1 F21, One White Flint North, 11555 Rockville Pike, Rockville, Maryland 20852.

FOR FURTHER INFORMATION CONTACT: Duncan White, Office of Nuclear Material Safety and Safeguards, U.S. Nuclear Regulatory Commission, Washington, DC 20555–0001; telephone: 301–415–2598; email: *Duncan.White@nrc.gov.*

SUPPLEMENTARY INFORMATION: The NRC published the proposed Agreement in the FR for comment once each week for 4 consecutive weeks on June 25, 2019 (84 FR 29811), July 2, 2019 (84 FR 31518), July 9, 2019 (84 FR 32657), and July 16, 2019 (84 FR 33864), as required by the Act. The comment period ended on July 25, 2019. One comment was received supporting the Agreement. The NRC staff determined that the Vermont Agreement State program is adequate to protect the public health and safety and compatible with the NRC's program. The Vermont Agreement is consistent with Commission policy and thus meets the criteria for an Agreement with the Commission.

After considering the request for an Agreement by the Governor of Vermont, the supporting documentation submitted with the request for an Agreement, and its interactions with the staff of the Vermont Department of Health, the NRC staff completed an assessment of the Vermont program. The agency made a copy of the staff assessment available in the NRC's PDR and electronically on the NRC's website. Based on the staff's assessment, the Commission determined on September 6, 2019, that the Vermont program for control of radiation hazards is adequate to protect the public health and safety and compatible with the Commission's program.

This Agreement is a rule as defined in the Congressional Review Act (5 U.S.C. 801–808). However, the Office of Management and Budget has not found it to be a major rule as defined in the Congressional Review Act.

Dated at Rockville, Maryland, this 23rd day of September, 2019.

For the Nuclear Regulatory Commission.

Annette L. Vietti-Cook,

Secretary of the Commission.

ATTACHMENT

AN AGREEMENT BETWEEN THE UNITED STATES NUCLEAR REGULATORY COMMISSION AND THE STATE OF VERMONT FOR THE DISCONTINUANCE OF CERTAIN COMMISSION REGULATORY AUTHORITY AND RESPONSIBILITY WITHIN THE STATE PURSUANT TO SECTION 274 OF THE ATOMIC ENERGY ACT OF 1954, AS AMENDED

WHEREAS, The United States Nuclear Regulatory Commission (hereinafter referred to as ''the Commission'') is authorized under Section 274 of the Atomic Energy Act of 1954, as amended, 42 U.S.C. Section 2011 *et seq.* (hereinafter referred to as ''the Act''), to enter into agreements with the Governor of the State of Vermont (hereinafter referred to as ''the State'') providing for discontinuance of the regulatory authority of the Commission within the State under Chapters 6, 7, and 8, and Section 161 of the Act with respect to byproduct materials as defined in Sections 11e.(1), (3), and (4) of the Act, source materials,

and special nuclear materials in quantities not sufficient to form a critical mass; and,

WHEREAS, The Governor of the State of Vermont is authorized under VT. STAT. ANN. tit. 18, § 1653 to enter into this Agreement with the Commission; and,

WHEREAS, The Governor of the State of Vermont certified on April 11, 2019, that the State has a program for the control of radiation hazards adequate to protect the public health and safety with respect to the materials within the State covered by this Agreement, and that the State desires to assume regulatory responsibility for such materials; and,

WHEREAS, The Commission found on September 6, 2019, that the program of the State of Vermont for the regulation of the materials covered by this Agreement is compatible with the Commission's program for the regulation of such materials and is adequate to protect the public health and safety; and,

WHEREAS, The State of Vermont and the Commission recognize the desirability and importance of cooperation between the Commission and the State in the formulation of standards for protection against hazards of radiation and in assuring that State and Commission programs for protection against hazards of radiation will be coordinated and compatible; and,

WHEREAS, The Commission and the State of Vermont recognize the desirability of the reciprocal recognition of licenses, and of the granting of limited exemptions from licensing of those materials subject to this Agreement; and,

WHEREAS, This Agreement is entered into pursuant to the provisions of the Act;

NOW, THEREFORE, It is hereby agreed between the Commission and the Governor of Vermont acting on behalf of the State as follows:

ARTICLE I

Subject to the exceptions provided in Articles II, IV, and V, the Commission shall discontinue, as of the effective date of this Agreement, the regulatory authority of the Commission in the State under Chapters 6, 7 and 8, and Section 161 of the Act with respect to the following materials:

1. Byproduct material as defined in Section 11e.(1) of the Act;

2. Byproduct material as defined in Section 11e.(3) of the Act;

3. Byproduct materials as defined in Section 11e.(4) of the Act;

4. Source materials; and

5. Special nuclear materials, in quantities not sufficient to form a critical mass.

ARTICLE II

This Agreement does not provide for the discontinuance of any authority, and the Commission shall retain authority and responsibility, with respect to:

A. The regulation of byproduct material as defined in Section 11e.(2) of the Act;

B. The regulation of the land disposal of byproduct, source, or special nuclear material received from other persons;

C. The evaluation of radiation safety information on sealed sources or devices containing byproduct, source, or special nuclear material and the registration of the sealed sources or devices for distribution, as provided for in regulations or orders of the Commission;

D. The regulation of the construction, operation, and decommissioning of any production or utilization facility or any uranium enrichment facility;

E. The regulation of the export from or import into the United States of byproduct, source, or special nuclear material, or of any production or utilization facility;

F. The regulation of the disposal into the ocean or sea of byproduct, source, or special nuclear material waste as defined in regulations or orders of the Commission;

G. The regulation of the disposal of such other byproduct, source, or special nuclear material as the Commission determines by regulation or order should, because of the hazards or potential hazards thereof, not be so disposed without a license from the Commission; and

H. The regulation of activities not exempt from Commission regulation as stated in 10 CFR part 150.

ARTICLE III

With the exception of those activities identified in Article II, paragraphs D. through H., this Agreement may be amended, upon application by the State and approval by the Commission to include one or more of the additional activities specified in Article II, paragraphs A. through C., whereby the State may then exert regulatory authority and responsibility with respect to those activities.

ARTICLE IV

Notwithstanding this Agreement, the Commission may from time to time by rule, regulation, or order, require that the manufacturer, processor, or producer of any equipment, device, commodity, or other product containing source, byproduct, or special nuclear material shall not transfer possession or control of such product except pursuant to a license or an exemption for licensing issued by the Commission.

ARTICLE V

This Agreement shall not affect the authority of the Commission under Subsection 161b. or 161i. of the Act to issue rules, regulations, or orders to promote the common defense and security, to protect restricted data, or to guard against the loss or diversion of special nuclear material.

ARTICLE VI

The Commission will cooperate with the State and other Agreement States in the formulation of standards and regulatory programs of the State and the Commission for protection against hazards of radiation and to assure that Commission and State programs for protection against hazards of radiation will be coordinated and compatible. The State agrees to cooperate with the Commission and other Agreement States in the formulation of standards and regulatory programs of the State and the Commission for protection against the hazards of radiation and to assure that the State's program will continue to be compatible with the program of the Commission for the regulation of materials covered by this Agreement.

The State and the Commission agree to keep each other informed of proposed changes in their respective rules and regulations and to provide each other the opportunity for early and substantive contribution to the proposed changes.

The State and the Commission agree to keep each other informed of events, accidents, and licensee performance that may have generic implication or otherwise be of regulatory interest.

ARTICLE VII

The Commission and the State agree that it is desirable to provide reciprocal recognition of licenses for the materials listed in Article I licensed by the other party or by any other Agreement State. Accordingly, the Commission and the State agree to develop appropriate rules, regulations, and procedures by which reciprocity will be accorded.

ARTICLE VIII

The Commission, upon its own initiative after reasonable notice and opportunity for hearing to the State or upon request of the Governor of Vermont, may terminate or suspend all or part of this Agreement and reassert the licensing and regulatory authority vested in it under the Act, if the

Commission finds that (1) such termination or suspension is required to protect the public health and safety, or (2) the State has not complied with one or more of the requirements of Section 274 of the Act.

Pursuant to Section 274j. of the Act, the Commission may, after notifying the Governor, temporarily suspend all or part of this Agreement without notice or hearing if, in the judgment of the Commission, an emergency situation exists with respect to any material covered by this agreement creating danger which requires immediate action to protect the health or safety of persons either within or outside of the State and the State has failed to take steps necessary to contain or eliminate the cause of danger within a reasonable time after the situation arose. The Commission shall periodically review actions taken by the State under this Agreement to ensure compliance with Section 274 of the Act, which requires a State program to be adequate to protect the public health and safety with respect to the materials covered by this Agreement and to be compatible with the Commission's program.

ARTICLE IX

This Agreement shall become effective on September 30, 2019, and shall remain in effect unless and until such time as it is terminated pursuant to Article VIII.

Done at Rockville, Maryland, in triplicate, this 9th day of September, 2019.

For the Nuclear Regulatory Commission. /RA/

Kristine L. Svinicki,

Chairman.

Done at Montpelier, Vermont, in triplicate, this 13th day of September, 2019.

For the State of Vermont. /RA/

Philip B. Scott,

Governor.

[FR Doc. 2019–20973 Filed 9–27–19; 8:45 am]

BILLING CODE 7590–01–P

SOCIAL SECURITY ADMINISTRATION

20 CFR Parts 404 and 416

[Docket No. SSA–2013–0044]

RIN 0960–AH63

Rules of Conduct and Standards of Responsibility for Appointed Representatives; Correction

AGENCY: Social Security Administration.

ACTION: Correcting amendments.

SUMMARY: On July 2, 2018, we published final rules in the **Federal Register** revising our rules of conduct and standards of responsibility for representatives. Those final rules reduced the amount of time to request Appeals Council review of a hearing officer's decision from 30 days to 14 business days, but we inadvertently failed to make the same change in the parallel sections of the CFR, which details when the Appeals Council will dismiss a request for review. This document corrects the omitted sections and makes our regulations consistent.

DATES: Effective September 30, 2019.

FOR FURTHER INFORMATION CONTACT: Nancy Chung, Office of Appellate Operations, Social Security Administration, 5107 Leesburg Pike, Falls Church, VA 22041, (703) 605–7100. For information on eligibility or filing for benefits, call our national toll-free number, 1–800–772–1213 or TTY 1–800–325–0778, or visit our internet site, Social Security Online, at *http://www.socialsecurity.gov.*

SUPPLEMENTARY INFORMATION: We published final rule, Rules of Conduct and Standards of Responsibility for Appointed Representatives, in the **Federal Register** on July 2, 2018. (83 FR 30849). Among other changes, the final rules reduced the amount of time to request an Appeals Council review of a hearing officer's decision from 30 days to 14 business days (§§ 404.1775 and 416.1575).[1]

We inadvertently failed to make correlated and necessary, changes in the sections describing when the Appeals Council will dismiss such a request for review of a hearing officer's decision. Specifically, paragraph (c) of sections 404.1795 and 416.1595 currently reference the prior ''30-day time period'' instead of the new 14 business day time period. This correction revises the incorrect time period identified in 404.1795 and 416.1595 to match the correct time period provided in 404.1775(b) and 416.1575(b).

(Catalog of Federal Domestic Assistance Program Nos. 96.001, Social Security—Disability Insurance; 96.002, Social Security—Retirement Insurance; and 96.004, Social Security—Survivors Insurance)

List of Subjects

20 CFR Part 404

Administrative practice and procedure, Blind, Disability benefits, Old-Age, Survivors, and Disability Insurance, Reporting and recordkeeping requirements, Social Security.

20 CFR Part 416

Administrative practice and procedure, Reporting and recordkeeping requirements, Supplemental Security Income (SSI).

Andrew Saul,

Commissioner of Social Security.

Accordingly, 20 CFR part 404, subpart R, and 20 CFR part 416, subpart O are corrected by making the following amendments:

PART 404—FEDERAL OLD-AGE, SURVIVORS AND DISABILITY INSURANCE (1950–)

Subpart R—Representation of Parties

■ 1. The authority citation for subpart R of part 404 continues to read as follows:

Authority: Secs. 205(a), 206, 702(a)(5), and 1127 of the Social Security Act (42 U.S.C. 405(a), 406, 902(a)(5), and 1320a–6).

■ 2. Amend § 404.1795 by revising paragraph (c) to read as follows:

§ 404.1795 When the Appeals Council will dismiss a request for review.

* * * * *

(c) *Request for review not timely filed.* The Appeals Council will dismiss a request for review if a party failed to file a request for review within the 14 business day time period set forth in § 404.1775(b) and the Appeals Council does not extend the time for good cause.

PART 416—SUPPLEMENTAL SECURITY INCOME FOR THE AGED, BLIND, AND DISABLED

Subpart O—Representation of Parties

■ 3. The authority citation for subpart O of part 416 continues to read as follows:

Authority: Secs. 702(a)(5), 1127, and 1631(d) of the Social Security Act (42 U.S.C. 902(a)(5), 1320a–6, and 1383(d)).

■ 4. Amend § 416.1595 by revising paragraph (c) to read as follows:

§ 416.1595 When the Appeals Council will dismiss a request for review.

* * * * *

(c) *Request for review not timely filed.* The Appeals Council will dismiss a request for review if a party failed to file a request for review within the 14 business day time period set forth in § 416.1575(b) and the Appeals Council does not extend the time for good cause.

[FR Doc. 2019–20446 Filed 9–27–19; 8:45 am]

BILLING CODE 4191–02–P

[1] 83 FR 30849, 30856, 30859 (2018).

DEPARTMENT OF JUSTICE

Drug Enforcement Administration

21 CFR Part 1305

[Docket No. DEA–453]

RIN 1117–AB44

New Single-Sheet Format for U.S. Official Order Form for Schedule I and II Controlled Substances (DEA Form 222)

AGENCY: Drug Enforcement Administration, Department of Justice.

ACTION: Final rule.

SUMMARY: The Drug Enforcement Administration (DEA) is amending its regulations to implement a new single-sheet format for DEA Form 222, used by DEA registrants to order schedules I and II controlled substances. The rule provides for a two-year transition period, during which the existing triplicate version of the forms may continue to be used. The rule also includes a number of minor procedural changes.

DATES: This rule is effective October 30, 2019.

FOR FURTHER INFORMATION CONTACT: Scott A. Brinks, Diversion Control Division, Drug Enforcement Administration; Mailing Address: 8701 Morrissette Drive, Springfield, Virginia 22152; Telephone: (571) 362–8209.

SUPPLEMENTARY INFORMATION:

Legal Authority and Background

The Controlled Substances Act (CSA) grants the Attorney General authority to promulgate rules and regulations relating to the registration and control of the manufacture, distribution, and dispensing of controlled substances; maintenance and submission of records and reports; and for the efficient execution of his statutory functions. 21 U.S.C. 821, 827, 871(b). The Attorney General is further authorized by the CSA to promulgate rules and regulations relating to the registration and control of importers and exporters of controlled substances. 21 U.S.C. 958(f). The Attorney General has delegated this authority to the Administrator of the DEA. 28 CFR 0.100(b).

The DEA originally published a notice of proposed rulemaking (NPRM) on this matter in the **Federal Register** on November 27, 2007. 72 FR 66118. On February 21, 2019, the DEA issued another NPRM, 84 FR 5395, superseding the 2007 NPRM. The DEA now finalizes the 2019 NPRM, with a number of minor changes.

Discussion of Comments

DEA received twelve comments on the 2019 NPRM, copies of which are available online at *www.regulations.gov.* The commenters included individuals, pharmaceutical distributors, retail pharmacies, pharmaceutical companies, and associations representing retail pharmacies and pharmacists. The DEA thanks all commenters for their thoughtful questions and suggestions, and appreciates their input during the rulemaking process.

Two comments were general statements of support for the rule, with no discussion of the proposed regulatory changes. Another comment stated that adopting ''the single-sheet form would make sense only if security measures are in place,'' but supported the rule, saying that ''all-important concerns have been addressed,'' and noting that the rule would result in a net cost savings. Of the remaining comments, most sought clarification of certain provisions in the proposed rule or recommended additional changes. Several comments expressed support for various provisions in the proposed rule. Only one comment explicitly opposed the rule. The substantive comments received, along with DEA's responses, will be discussed below.

Power of Attorney Issues

Comment: Multiple commenters raised issues relating to the proposed changes to the power of attorney (POA) provisions in 21 CFR 1305.05(d). The comments focused on which persons would be authorized to sign a POA, and how POAs may be signed.

Under the current rules, § 1305.05(d) requires that a POA be signed by four people: The person who signed the registrant's most recent application for DEA registration or reregistration, the person to whom the POA is being granted, and two witnesses. The proposed amendment to § 1305.05(d) would require that this first signature be made not by the person who in fact signed the most recent application for DEA registration or reregistration, but instead by any person directly authorized to sign such an application under § 1301.13(j): By the registrant, if an individual; by a partner of the registrant, if a partnership; or by an officer of the registrant, if a corporation, corporate division, association, trust or other entity. Multiple commenters recognized, and supported, that this amendment would allow a broader range of individuals to sign POAs, but expressed concerns that it would not include one type of person currently authorized to sign. Under the existing rules, if, *e.g.,* an officer of a corporation executes a POA under § 1301.13(j) to authorize a non-officer to sign applications for registration and reregistration on behalf of the corporation, and that individual has signed the most recent application, then that individual may also sign a POA under § 1305.05, despite not being an officer of the corporation. Under the proposed change to § 1305.05(d), this person would no longer be authorized to sign a POA. Multiple commenters suggested the DEA update the final rule to continue to allow persons in this situation to sign POAs in addition to permitting those individuals with expanded authority to sign a POA identified in the proposed § 1305.05(d).

Response: Given the significance of Form 222 signature authority, and the potential for diversion when that authority is abused, the DEA deems it appropriate to require an officer, a partner, or the registrant him- or herself to sign POAs under § 1305.05. The DEA appreciates that this change may require some registrants to update their business processes to ensure POAs are signed by the appropriate persons, but POAs are effective until revoked, and registrants would only need to execute a single POA under the new rule to authorize the person who signed the most recent application for registration.

Comment: A few of the commenters, who raised concerns about the expanded authority for signing a POA, also requested changes to § 1305.05(d) to allow POAs to be signed electronically as an alternative to a written signature on a hard-copy form. Commenters stated electronic signatures are a secure and traceable method of signing documents, and are already commonly accepted in commercial transactions. Commenters also stated that electronic signature systems are able to accommodate witness signatures, but that given the security features of electronic signatures, witness signatures are not needed when a document is signed electronically.

Response: Electronic signatures are a widely accepted form of signature both in the government and the private sector, and the DEA agrees that allowing electronic signatures on POAs under § 1305.05 is a reasonable way of giving registrants more flexibility in the execution process. However, the requirement to have two witness signatures on a POA is essential to preventing diversion, and the DEA does not believe that electronic signatures are an adequate substitute for that requirement because they do not offer the necessary safeguards against diversion. Requiring two additional

parties to confirm the validity of a POA significantly reduces the risk of a fraudulent POA being used to divert controlled substances, or otherwise disrupt the closed system of distribution. Therefore, the witness requirement will be kept in place, but witnesses may sign a POA electronically, if the electronic signature technology used has this capability. This final rule adds § 1305.05(f) to explicitly allow electronic signatures for POAs, but does not make any changes to the witness signature requirement. This final rule also includes some non-substantive changes to that section to improve clarity.

Anonymous Comment

Comment: An anonymous commenter stated that the proposed rule conflicts with the requirements of 21 U.S.C. 828(d)(1) as it requires purchasers to make a copy of a submitted order form ''on a form provided by the [A]ttorney [G]eneral.'' The commenter stated that DEA should petition Congress to change section 828 before the DEA changes the triplicate form to a single-sheet form. This commenter also stated that, with the DEA no longer providing forms to be used to create copies, the rule would impose costs on registrants, not reduce their costs.

Response: The DEA does not interpret the provisions of 21 U.S.C. 828(d)(1) to preclude the single-sheet framework proposed in the NPRM. The language of section 828(d)(1) is broad enough to allow for regulations permitting registrants to create a photocopy of a Form 222, or indeed to create an electronic copy and not retain any paper form at all. Section 828(d)(1) only states that the Attorney General (delegated to the Administrator of the DEA) must issue order forms pursuant to 21 U.S.C. 828(a) and (c)(2). Section 828(c)(2) requires distributors of controlled substances in schedule I or II to use a form issued by the Administrator and ''make or cause to be made a duplicate thereof'' on such form. The DEA interprets section 828(d)(1) to mean that the distributor must make a copy; it does not mean that the issued form itself must be a form with carbon copies. Therefore, the DEA does not interpret the proposed rule's change to the Form 222 to necessitate any changes to section 828.

Regarding the economic impact of the rule, while it does impose certain costs on affected registrants, the DEA estimates it will result in a net cost savings for purchasers, dispensing suppliers, and non-dispensing suppliers of between $312 and $336 per entity per year.[1]

Comment by Healthcare Distribution Alliance (HDA)

Comment: HDA noted that § 1305.13(a) as amended in the proposed rule is not explicit as to when the purchaser must make a copy of the Form 222. HDA stated that they believe the DEA's intent was for the purchaser to make a copy before submitting the form to a supplier, and that they support the provision under that reading.

Response: HDA is correct that under the proposed rule, a purchaser would be required to make a copy of the original Form 222 before submitting it to a supplier. Since the supplier would retain the original for its records, the purchaser would not have an opportunity to create a copy after submitting the original to the supplier. The regulatory text in § 1305.13(a) has been updated in this final rule to make this requirement explicit.

Comment: HDA also recommended updating § 1305.13(b) to not require suppliers that are required to report acquisition/disposition transactions to the Automation of Reports and Consolidated Orders System (ARCOS) to create a copy of the original Form 222. As drafted in the proposed rule, § 1305.13(b) required suppliers to ''record on the original and a copy their DEA registration number'' and other information, regardless of whether the supplier needed to submit a copy of the form to the DEA. By removing ''and a copy'' from this section, only suppliers who do not report to ARCOS would be required to create a copy of the original, per proposed § 1305.13(d).

Response: The DEA agrees that removing ''and a copy'' from § 1305.13(b) would help clarify that ARCOS-reporting suppliers are not required to make a copy of the original Form 222. This final rule updates § 1305.13(b) accordingly.

Comment: Relatedly, HDA commented that while the proposed rule specified that purchasers would be permitted to make an electronic copy of a Form 222 to keep for their records, the proposed rule did not explicitly state whether suppliers could retain the original Form 222 in an electronic form, instead of the paper original itself. HDA suggested the DEA clarify this issue, and allow suppliers to retain the original Form 222 in an electronic form.

Response: The proposed rule was clear that under the proposed changes to § 1305.13, suppliers would be required to retain the original of a Form 222, and could not fulfill their recordkeeping responsibilities by retaining a copy, whether paper or electronic. HDA's comment suggests allowing suppliers to retain the original Form 222 ''in an electronic form,'' but this amounts to nothing more than creating an electronic copy. The original form is on paper, and so the only way to retain the original is to retain that same paper form. The new single-sheet Form 222 is designed with multiple security features that would not be preserved in a copy, paper or electronic. Retaining the original forms and making them available for inspection is necessary in order to maintain the closed system of distribution and to prevent diversion. Since the DEA is not changing the requirement that suppliers must retain the original Form 222 for their records, and may not retain a copy, whether paper or electronic, no changes have been made to this provision in this final rule.

Comment: HDA's comment also included a suggestion to increase the number of order lines on the form, provided that this could be done without reducing legibility or requiring the form to be larger than 8.5″ x 11″, and recommended the DEA coordinate with the Food and Drug Administration (FDA) to ensure the single-sheet Form 222 can accommodate any changes to the National Drug Code (NDC) format currently being considered.

Response: The new form will include 20 order lines, double the previous number, and will fit on a standard 8.5″ x 11″ sheet. The DEA is aware of the pending changes to the NDC format, and, although no changes are being made to the NDC field on the new Form 222, the DEA will be monitoring the FDA's rulemaking on the matter, and will update the Form 222 as necessary in the future. Based on the current state of that rulemaking, any changes to the NDC format would only require minor modifications to the single-sheet Form 222.

Comment: Finally, HDA offered a number of comments related to the electronic Controlled Substances Ordering System (CSOS).

Response: While the DEA appreciates these comments, changes to CSOS are outside the scope of this rulemaking.

Comment by CVS Health

Comment: CVS Health commented that the DEA should further explain the procedure in 21 CFR 1305.11(c) for signing and dating an electronic requisition for new Form 222, and clarify that signing and dating is not

[1] More information about the economic impact of this rule can be found in the Regulatory Flexibility Act section, below.

required for electronic requisition requests, but that registrants instead must comply with DEA requirements for using the DEA secured network connection.

Response: CVS Health is correct that registrants are not required to sign or date electronic requisition requests made through a DEA secured network connection. Nor are registrants required to provide their address on such requests. Section 1305.11(c) has been updated in this final rule to reflect this.

Comment: CVS Health further suggested that, in the regulatory text of the final rule, the DEA explicitly state that purchasers are permitted to retain their copies of Forms 222 as electronic scanned images.

Response: The DEA agrees an explicit statement authorizing purchasers to retain electronic copies of Forms 222 would improve clarity, and § 1305.13(a) has been updated in this final rule to include such a statement.

Comment: CVS Health also asked how purchasers should record the number of containers and date received from the supplier, if the purchaser has retained an electronic copy of the order form, noting that printing out the electronic copy, filling it out with the receipt information, and rescanning it is a somewhat inefficient process. CVS Health suggested adding a provision to the final rule allowing purchasers to create an electronic file with the receipt information and ''electronically link'' this file to the electronic copy of the Form 222, provided that the information is readily retrievable upon request.

Response: The DEA appreciates that some registrants' records systems may process order forms in this way, or in a way that poses a similar inefficiency. However, creating a separate file for order receipt data would significantly complicate the inspection process. With double the number of records for DEA investigators to review during an inspection, this would add additional complexity, and consequently time and expense, to the enforcement process, and risk increasing diversion. Therefore, although requiring the order receipt data to be entered onto the copy of the Form 222 may, in some cases, require purchasers to take additional steps when processing the order, the DEA deems this necessary to prevent diversion and protect the public health and safety.

Comment: Finally, CVS Health recommended updating § 1305.17(c) to clarify that the requirement to maintain Forms 222 separately from all other records does not apply when a purchaser stores its copy of a form electronically.

Response: Given the nature of electronic records systems, the DEA agrees that electronic copies of Forms 222 do not need to be stored on a different server or electronic system from a registrant's other records. The requirement to store Forms 222 separately from all other records may be met, for electronic copies, by storing them in such a way that they can be readily retrieved separately from all other records. Purchasers must be able, during an inspection or upon other DEA requests, to readily retrieve their electronic copies of Forms 222, with any related statements or other documents, and without any other records. Section 1305.17(e) has been added in this final rule to make this requirement clear.

Comment by Costco

Comment: As discussed above, Costco requested changes to § 1305.05(d) to allow POAs to be signed electronically, and to not require witness signatures when a POA is signed electronically.

Response: As discussed above, this final rule adds a provision allowing a POA under § 1305.05 to be signed electronically, but retains the requirement that such POAs be signed by two witnesses.

Comment by National Association of Chain Drug Stores (NACDS)

Comment: NACDS' comment discussed the POA provisions of the proposed rule, but also requested that the final rule allow pharmacies to continue to requisition Forms 222 using Form 222a. NACDS indicated this would be helpful in situations where pharmacies need more forms than allotted or when there is a need beyond the normal demand. NACDS stated that this method of requisition would be in addition to those specified in the proposed rule.

Response: While the DEA appreciates the importance of offering registrants multiple options for requisitioning Forms 222, Form 222a has been out of use for some time. The requisition options in the proposed rule—through a DEA secured network connection, by contacting any Division Office, or by contacting the Registration Section through the customer service center—should be sufficiently broad to accommodate the vast majority of registrants, without requiring the time and expense of maintaining an outdated form.

Comment by Novartis

Comment: After briefly touching on the POA issues discussed above, Novartis' comment asked how many forms could be requisitioned per registration type, and whether there would be a particular data source (*e.g.,* ARCOS) that would be used to determine that number based on business activity.

Response: Currently, registrants are asked to provide a written explanation of need if the number of Forms 222 requested in a given requisition request exceeds a particular number (not made public, for security reasons), unique to each business activity. The proposed rule did not include any changes to the default numbers for each business activity, or how a registrant's business activity is determined for these purposes. This final rule does not make any changes to these policies either, and under the new rules registrants may continue to requisition Forms 222 in the same numbers as under current practice. Registrants will still be asked to provide a written explanation when more than the default number of forms is requested.

Comment: Novartis also asked whether the proposed rule would include any change to how Forms 222 are ordered in bulk, and if so, what the new procedure would be.

Response: The proposed rule included no substantive changes to the bulk ordering process. The rule gave three ways to requisition order forms—through a DEA secured network connection, by contacting any Division Office, or by contacting the Registration Section through the customer service center—but registrants will provide the same information in the same format as under existing practice.

Comment: Novartis sought additional information on the details of the new form, specifically: Whether it would be printed on color paper or in color ink; if so, whether a black and white copy would satisfy the purchaser's recordkeeping requirements; what type of paper stock the form would be printed on; and whether a sample of the new form would be made available to registrants. Novartis stated that registrants using electronic ordering systems will need time to update their systems before adopting the new single-sheet form. Novartis stated it would take six to eight months to update its own system.

Response: The new Form 222 will be printed in color on white 8.5″ x 11″, 24 pound paper stock. A black and white copy of the form is sufficient to meet the purchaser's recordkeeping obligations. A sample of the new form can be obtained by request, using the contact information first provided above, and is included in the information collection request associated with this rulemaking, available on *www.reginfo.gov* under

Office of Management and Budget (OMB) Control Number 1117–0010. With respect to registrants needing to update their electronic ordering systems to accommodate the new single-sheet format, the DEA appreciates that it will take time to implement the necessary changes; this is why the proposed rule included a two-year transition period. Registrants may continue to use existing stocks of triplicate Forms 222 while they update their ordering systems, to avoid any disruptions.

Comment by Kroger Health

Comment: As discussed above, Kroger Health suggested the DEA update § 1305.05(d) to expand the range of people authorized to sign a POA. Kroger Health also suggested changes to § 1305.05 to allow POAs to be signed electronically, and to not require witness signatures when a POA is signed electronically.

Response: As discussed above, this final rule retains the requirement that POAs under § 1305.05 be signed by an officer, a partner, or the registrant him- or herself, and does not expand this provision to include the person who signed the most recent application for registration. Additionally, this final rule adds a provision allowing a POA under § 1305.05 to be signed electronically, but retains the requirement that such POAs be signed by two witnesses.

Comment by Janssen

Comment: As discussed above, Janssen suggested the DEA update § 1305.05(d) to expand the range of people authorized to sign a POA.

Response: As discussed above, this final rule retains the requirement that POAs under § 1305.05 be signed by an officer, a partner, or the registrant him- or herself, and does not expand this provision to include the person who signed the most recent application for registration.

Comment by American Pharmacists Association (APhA)

Comment: APhA sought clarification whether the handling and recordkeeping for triplicate Forms 222 during the transition period would remain the same as under the current rules, or if any of the proposed changes would apply.

Response: In general, for triplicate forms used during the transition period, registrants should continue to use the same handling and recordkeeping procedures they use under the existing rules. The provisions in § 1305.20 are the specific requirements applicable to the use of triplicate Forms 222 during the transition period, and are largely duplicative of the existing rules governing the use of triplicate forms. However, when § 1305.20 is silent as to a particular requirement included in other sections of part 1305, those other sections are controlling. For example, the requirements for signing POAs in § 1305.05 are not superseded by any provision in § 1305.20; therefore, the new rules for who may sign a POA, and how, are applicable to the use of triplicate Forms 222 during the transition period.

Comment: APhA recommended the DEA coordinate with the FDA to accommodate any changes to the NDC format.

Response: As previously discussed, the DEA is monitoring FDA's rulemaking on this matter, and will update the new single-sheet Form 222 as needed in the future.

Comment: APhA stated that the proposed rule would require purchasers to ''make a copy (photocopy or scan)'' of executed Forms 222 for their records, and would similarly allow ''dispensing suppliers'' to submit a copy of Form 222 to the DEA by fax or email. However, APhA noted that there were other methods of creating an electronic copies besides scanning. APhA encouraged the DEA to clarify that purchasers and suppliers would not be arbitrarily restricted in how they can create an electronic copy of Forms 222, and that capturing an image of a form using, *e.g.,* a smartphone, would be deemed to meet the recordkeeping requirements of the rule.

Response: The DEA agrees registrants should be permitted to make an electronic copy of Forms 222 in any reasonable method, and the regulatory text in the proposed rule did not indicate otherwise. Photocopying and scanning were given in the preamble as two possible methods of creating a copy, but are not the only methods that would be allowed. The proposed changes to the regulatory text in § 1305.13(a) did not restrict registrants to only photocopying or scanning, so no changes are needed in the final rule to give registrants the flexibility APhA suggested.

Also, as is discussed below, the DEA is removing fax as an option for submitting copies of Forms 222 to the DEA. The DEA believes the cost of providing this submission option would outweigh the marginal benefit to the few registrants who would submit copies by fax.

Comment: Finally, APhA stated it approves of the DEA's decision to allow purchasers to retain either the original of the single-sheet Form 222 or a ''readily retrievable'' copy of the form for their records. APhA stated this flexibility would be more efficient and reduce costs, and encouraged the DEA to keep this provision in the final rule.

Response: The terms of the proposed rule would not allow purchasers to retain the original of a Form 222 for their records, and the DEA is not updating these terms in this final rule to allow purchasers to do so. As the proposed amendments to § 1305.13(a) clearly stated, the original of the single-sheet Form 222 must be submitted to the supplier. The purchaser must create a copy of the original form and retain the copy for its records. The purchaser does not have the option of retaining the original. The proposed amendments to § 1305.13(d) clearly stated that suppliers must keep the original of the Form 222 on file. The preamble to the proposed rule also made clear that purchasers would make and retain a copy of the Form 222, and suppliers would retain the original.[2] These requirements have not been changed in this final rule, and therefore no changes to the relevant regulatory text have been made.

Changes in the Final Rule

This final rule makes a number of substantive changes to the provisions of the proposed rule, as well as some non-substantive corrections and style edits to improve clarity. Regulatory text referring to registrants as ''he or she,'' ''him or her,'' or in similar ways has been updated to reflect that purchasers may be corporate entities. The substantive changes to the regulatory text are listed below.

Section 1305.05

As discussed in the comment analysis section, above, § 1305.05(f) has been added to permit electronic signatures on POAs executed under that section. The witness requirement remains in place, but witnesses are permitted to sign a POA electronically.

This final rule also includes some non-substantive changes to § 1305.05(d) to improve clarity.

Section 1305.11

As discussed in the comment analysis section, above, § 1305.11(c) has been updated to reflect that registrants are not required to sign or date Form 222 requisition requests, or to provide their address with such requests.

[2] 84 FR 5395 at 5397 (Feb. 21, 2019) (''[purchasers] would be required to complete and retain a copy of the form and send the original to their supplier for filling. The supplier would be required to record certain information related to the filling on the original and retain such original'').

Section 1305.13

As discussed in the comment analysis section, above, § 1305.13(a) has been updated to make explicit that purchasers must make a copy of the original Form 222 for their records before forwarding the original to the supplier, and that purchasers may retain either paper or electronic copies of Forms 222 for their records.

As discussed in the comment responses, above, § 1305.13(b) has been updated to not require ARCOS-reporting suppliers to create and fill out copies of Forms 222 in addition to the originals.

Section 1305.13(d) has been updated to remove fax as one of the options for submitting copies of completed Forms 222 to the DEA. On further review, the DEA believes the cost of providing this submission option would outweigh the marginal benefit to the few registrants who would submit copies by fax. Even if fax submission were permitted, the DEA believes that the vast majority of registrants would use the other options available—mail and email. Removing fax submissions as an option will simplify the processing of Form 222 copies for DEA, though excepted cost savings of this change are minimal.

Section 1305.17

As discussed in the comment responses, above, § 1305.17(e) has been added in this final rule to clarify that the requirement to maintain copies of Forms 222 separately from all other records may be met, for electronic copies, by storing them in such a way that they are readily retrievable separately from all other records.

Additionally, newly added § 1305.17(e) also includes a provision allowing electronic copies of Forms 222 to be stored at a location different from the registered location, provided such forms are readily retrievable at the registered location upon request. This will give purchasers more flexibility in utilizing electronic records systems while still ensuring the inspection process is not unduly hindered by complex recordkeeping arrangements.

Section 1305.18

Section 1305.18 has been updated to properly reflect the requirements of § 1301.52(c), which directs registrants discontinuing business activities with respect to controlled substances to return all unexecuted Forms 222 to the Registration Section at DEA headquarters. Section 1305.18 currently states that unused Forms 222 should be returned to the nearest DEA office. This final rule resolves this conflict by updating § 1305.18 to require registrants to return all unused Forms 222 to the Registration Section. The current mailing address for the Registration Section may be found in 21 CFR 1321.01.

Section 1305.20

Section 1305.20(h) has been updated to provide that unused triplicate Forms 222 should be returned to the Registration Section at DEA headquarters. This matches the new language in § 1305.18, and resolves the conflict with § 1301.52(c).

The introductory text to § 1305.20 has been updated to make clear that even if registrants still have a supply of triplicate Forms 222 available after the two-year transition period, they must switch to using the new single-sheet Form 222 at that point.

Regulatory Analysis

The DEA conducted a regulatory analysis of the final rule to determine how its provisions will impact registrants and the DEA. The results of this analysis are outlined below.

Executive Orders 12866 (Regulatory Planning and Review), 13563 (Improving Regulation and Regulatory Review), and 13771 (Reducing Regulation and Controlling Regulatory Costs)

This final rule was developed in accordance with the principles of Executive Orders 12866, 13563 and 13771. Executive Order 12866 directs agencies to assess all costs and benefits of available regulatory alternatives and, if regulation is necessary, to select regulatory approaches that maximize net benefits (including potential economic, environmental, public health, and safety effects; distributive impacts; and equity). Executive Order 13563 is supplemental to and reaffirms the principles, structures, and definitions governing regulatory review as established in Executive Order 12866. Executive Order 12866 classifies a ''significant regulatory action,'' requiring review by OMB, as any regulatory action that is likely to result in a rule that may: (1) Have an annual effect on the economy of $100 million or more or adversely affect in a material way the economy, a sector of the economy, productivity, competition, jobs, the environment, public health or safety, or State, local, or tribal governments or communities; (2) create a serious inconsistency or otherwise interfere with an action taken or planned by another agency; (3) materially alter the budgetary impact of entitlements, grants, user fees, or loan programs or the rights and obligations of recipients thereof; or (4) raise novel legal or policy issues arising out of legal mandates, the President's priorities, or the principles set forth in the Executive Order.

1. The DEA expects that this regulatory action will not have an annual effect on the economy of $100 million or more in at least one year and therefore is not an economically significant regulatory action. DEA's analysis finds that this final rule will result in an annual cost-savings of $25.9 million; approximately $22.1 million to purchasers (persons executing DEA Form 222s) primarily due to efficiencies gained from having more lines per form, anticipated reduction of instances of form failure, allowing the use of a printer, and general ease of use; approximately $0.2 million to non-dispensing suppliers (manufacturers and distributors) due to the elimination of the requirement that registrants mail copies of their completed order forms to their DEA field office; $2.9 million to dispensing suppliers due to having the option to scan and email completed order forms; and $0.8 million to the DEA from reduction in cost of forms production, postage, and equipment maintenance.

2. This regulatory action is not likely to result in a rule that may create a serious inconsistency or otherwise interfere with an action taken or planned by another agency.

3. This regulatory action is not likely to result in a rule that may materially alter the budgetary impact of entitlements, grants, user fees, or loan programs or the rights and obligations of recipients thereof.

4. This regulatory action is not likely to result in a rule that may raise novel legal or policy issues arising out of legal mandates, the President's priorities, or the principles set forth in the Executive Order.

This final rule is estimated to have a total cost savings of $25.9 million. Although this final rule is not a significant regulatory action under Executive Order 12866, this final rule is expected to be an Executive Order 13771 deregulatory action.

An economic analysis of this rule can be found in the rulemaking docket at *https://www.regulations.gov.*

Executive Order 12988, Civil Justice Reform

This final rule meets the applicable standards set forth in sections 3(a) and 3(b)(2) of Executive Order 12988, Civil Justice Reform to eliminate ambiguity, minimize litigation, establish clear legal standards, and reduce burden.

Executive Order 13132, Federalism

This final rule does not have federalism implications warranting the application of Executive Order 13132. The final rule does not have substantial direct effects on the States, on the relationship between the national government and the States, or the distribution of power and responsibilities among the various levels of government.

Executive Order 13175, Consultation and Coordination With Indian Tribal Governments

This final rule does not have substantial direct effects on the States, on the relationship between the national government and the States, or the distribution of power and responsibilities between the Federal Government and Indian tribes.

Regulatory Flexibility Act

The Administrator hereby certifies that this final rule has been drafted, in accordance with the Regulatory Flexibility Act (RFA) (5 U.S.C. 605(b)), and by approving it, certifies that this rule will not have a significant economic impact upon a substantial number of small entities.

In accordance with the RFA, the DEA evaluated the impact of this rule on small entities. The DEA is amending its regulations to implement a new single-sheet format for order forms (DEA Form 222) which are issued by the DEA to DEA registrants to allow them to order schedule I and/or II controlled substances. The DEA is also making a number of minor procedural changes, including, among other things, who can issue the power of attorney that is required for others to sign DEA Form 222. This final rule affects all parties (purchaser and suppliers) to transactions where a DEA Form 222 is used.

Based on its records, the DEA estimates that 71,481 entities are affected by this rule, which consists of 336 manufacturers, 378 distributors, 31,887 pharmacies, 7,980 hospitals and clinics and 30,900 practitioners. The DEA estimates that 65,984 (92.3%) of the total 71,481 affected entities are small entities (312 manufacturers, 364 distributors, 31,217 pharmacies, 3,716 hospitals and clinics and 30,375 practitioners). The estimated economic impact varies for purchasers and suppliers, and among the suppliers, dispensing suppliers and non-dispensing suppliers.

''Purchasers'' are registrants (primarily pharmacies, practitioners, hospitals and clinics) who execute DEA Form 222 to order schedules I and II controlled substances. The use of the new single sheet form will require purchasers to make a copy (paper or electronic) prior to submission to a supplier at an estimated cost of $0.22 per form, or a total of $734,646 per year. However, some cost savings are expected due to efficiencies gained from the new form. Key advantages include: (1) Reduction in number of forms executed due to increased number of lines per form, (2) reduction in form failure due to upgraded high-quality secure paper (fewer incidences of tears, carbon not copying through, improper tear of perforated edges, etc.), and (3) increased efficiency in completing the form due to ability to use a computer printer to fill the form (in addition to the existing allowable methods of typewriter, pen, or indelible pencil). Purchasers, as a group, are anticipated to save $22,794,750, for a net savings of $22,060,104, or $312 per entity.

''Dispensing suppliers'' are individual or institutional practitioners (*e.g.,* physicians, pharmacies, hospitals, clinics, etc.) that are registered to dispense a controlled substance and may also distribute (without being registered to distribute) a quantity of such substance to another practitioner using a DEA Form 222. The final rule will allow the dispensing supplier to submit their copy of the order form to the DEA via email, as an alternative to submitting it by mail. Assuming dispensers will opt for the less costly scan and email method, based on an estimated 17,480 dispensing suppliers, the DEA estimates the dispensing suppliers, as a group, will save $2,861,977 per year or $164 per supplier.

''Non-dispensing suppliers'' are persons registered with the DEA as manufacturers or distributors of controlled substances listed in schedules I or II. The final rule and new form will remove the requirement to ship their copies of the received order forms to their DEA field office at the end of each month. The DEA estimates, by removing this requirement, the non-dispensing suppliers, as a group will save $239,657 per year, or $336 per entity.

In summary, the final rule is estimated to save purchasers, dispensing suppliers, and non-dispensing suppliers, $312, $164, and $336 per entity per year, respectively. The DEA uses 3% of annual revenue as threshold for ''significant economic impact.'' The annual revenue at which $312, $164, and $336 is 3% equates to $10,400, $5,467, and $11,200, respectively. The DEA estimates the annual revenues of purchasers, dispensing suppliers, and non-dispensing suppliers are greater than $10,400, $5,467, and $11,200, respectively, resulting in an economic impact of less than 3% of annual revenue.

Therefore, the DEA's evaluation of economic impact by size category indicates that the rule will not have a significant economic impact on a substantial number of small entities.

Unfunded Mandates Reform Act of 1995

This final rule will not result in the expenditure by State, local and tribal governments, in the aggregate, or by the private sector, of $100,000,000 or more (adjusted for inflation) in any one year, and will not significantly or uniquely affect small governments. Therefore, no actions were deemed necessary under the provisions of the Unfunded Mandates Reform Act of 1995, 2 U.S.C. 1532.

Paperwork Reduction Act of 1995

Pursuant to section 3507(d) of the Paperwork Reduction Act of 1995 (PRA) (44 U.S.C. 3501 *et seq.*), the DEA has identified the following collections of information related to this final rule. A person is not required to respond to a collection of information unless it displays a valid OMB control number. Copies of existing information collections approved by OMB may be obtained at *http://www.reginfo.gov/public/do/PRAMain.*

A. Collections of Information Associated With the Final Rule

Title: U.S. Official Order Forms for Schedules I & II Controlled Substances (Accountable Forms), Order Form Requisition.

OMB Control Number: 1117–0010.

Form Number: DEA–222.

The DEA Form 222 provides the DEA with oversight and control over the distribution of schedules I and II controlled substances. The form is the only document that can authorize the distribution of schedules I and II controlled substances within the closed system of distribution. The DEA is amending its regulations to implement a new single-sheet format for order forms (DEA Form 222) which are issued by DEA to DEA registrants to allow them to order schedule I and/or II controlled substances. Currently, the DEA Form 222 is a triplicate form with interleaved carbon paper.

The new single-sheet format is expected to lower labor burden due to efficiencies gained from having more lines per form, anticipated reduction of instances of form failure, allowing the

use of a printer, and general ease of use. Additionally, this rule removes the requirement for ARCOS-reporting suppliers to mail completed order forms to the DEA field offices. Finally, this rule will also allow suppliers that do not report to ARCOS (generally dispensers who distribute) to submit completed order forms to DEA headquarters via mail or email.

DEA registrants will be allowed to exhaust their supply of the current forms as part of the transition to using the new single-sheet form. When a registrant's supply of triplicate forms is depleted, the DEA will issue the registrant the new single-sheet forms. This rule includes a ''sunset date''—a date after which use of the triplicate forms will not be allowed—of October 30, 2021.

This rule does not impact those who use the electronic equivalent order form. Since the proposed rule, the DEA has adjusted its methodology to estimate the amount of online responses relative to paper responses to account for the additional ordering lines included on the new paper form. As a result, the estimated number of online responses has decreased, but the average burden per response has increased, so the total annual hour burden estimate remains the same. The DEA now estimates the following number of respondents and burden associated with this collection of information (which includes DEA Form 222 and the electronic equivalent):

- Number of respondents: 125,435.
- Frequency of response: 42.7 per respondent per year (average).
- Number of responses: 5,350,000 (3,300,000 paper DEA Form 222; 2,050,000 electronic equivalent).
- Burden per response: $0.1925.
- Total annual hour burden: 1,030,000.

Since this rule eliminates the requirement that suppliers mail completed DEA Forms 222 to their local DEA field offices, the cost burden associated with that requirement is also eliminated. However, this rule requires purchasers to make copies of the new single-sheet Form 222 before submitting the original to the supplier; the DEA estimates this printing/copying will have a cost burden of $130,350.

If you need a copy of the information collection instrument(s) with instructions or additional information, please contact the Regulatory Drafting and Policy Support Section (DPW), Diversion Control Division, Drug Enforcement Administration; Mailing Address: 8701 Morrissette Drive, Springfield, Virginia 22152; Telephone: (202) 598–6812.

Any additional comments on this collection of information may be sent in writing to the Office of Information and Regulatory Affairs, OMB, Attention: Desk Officer for DOJ, Washington, DC 20503. Please state that your comment refers to OMB Control Number 1117–0010.

Congressional Review Act

This final rule is not a major rule as defined by the Congressional Review Act (CRA), 5 U.S.C. 804. This final rule will not result in an annual effect on the economy of $100,000,000 or more; a major increase in costs or prices; or significant adverse effects on competition, employment, investment, productivity, innovation, or on the ability of United States-based companies to compete with foreign-based companies in domestic and export markets. Accordingly, this final rule is not subject to the reporting requirements under the CRA.

List of Subjects in 21 CFR Part 1305

Drug traffic control, Reporting and recordkeeping requirements.

For the reasons set forth above, the DEA amends 21 CFR part 1305 as follows:

PART 1305—ORDERS FOR SCHEDULE I AND II CONTROLLED SUBSTANCES

■ 1. The authority citation for part 1305 continues to read as follows:

Authority: 21 U.S.C. 821, 828, 871(b), unless otherwise noted.

■ 2. Amend § 1305.05 by revising paragraph (d) and adding paragraph (f) to read as follows:

§ 1305.05 Power of attorney.

* * * * *

(d) A power of attorney must be executed by:

(1) The registrant, if an individual; a partner of the registrant, if a partnership; or an officer of the registrant, if a corporation, corporate division, association, trust or other entity;

(2) The person to whom the power of attorney is being granted; and

(3) Two witnesses.

* * * * *

(f) A power of attorney executed under this section may be signed electronically, by any or all of the persons required to sign.

■ 3. Revise § 1305.11 to read as follows:

§ 1305.11 Procedure for obtaining DEA Forms 222.

(a) DEA Forms 222 are issued in mailing envelopes containing a predetermined number of forms based on the business activity of the registrant, each form consisting of one single-sheet. A limit, which is based on the business activity of the registrant, will be imposed on the number of DEA Forms 222 that will be furnished upon a requisition for order forms unless additional forms are specifically requested and a reasonable need for such additional forms is shown.

(b) Any person with an active registration that is authorized to order schedule I and II controlled substances is entitled to obtain a DEA Form 222, which will be supplied at any time after the DEA registration is granted. Any person holding a registration authorizing the person to obtain a DEA Form 222 may requisition the forms through a DEA secured network connection or by contacting any Division Office or the Registration Section of the Administration through the customer service center.

(c) Each requisition must show the name, address, and registration number of the registrant and the number of DEA Forms 222 desired.

(d) DEA Forms 222 will have an order form number and be issued with the name, address and registration number of the registrant, the authorized activity, and schedules of the registrant. This information cannot be altered or changed by the registrant; the registrant must report any errors to the local Division Office or the Registration Section of the Administration to modify the registration.

■ 4. Amend § 1305.12 by revising paragraph (a) to read as follows:

§ 1305.12 Procedure for executing DEA Forms 222.

(a) A purchaser must prepare and execute a DEA Form 222 by use of a typewriter, computer printer, pen, or indelible pencil.

* * * * *

■ 5. Amend § 1305.13 by revising paragraphs (a), (b), (d), and (e) to read as follows:

§ 1305.13 Procedure for filling DEA Forms 222.

(a) A purchaser must make a copy of the original DEA Form 222 for its records and then submit the original to the supplier. The copy retained by the purchaser may be in paper or electronic form.

(b) A supplier may fill the order, if possible and if the supplier desires to do so, and must record on the original DEA Form 222 its DEA registration number and the number of commercial or bulk containers furnished on each item and the date on which the containers are shipped to the purchaser. If an order

cannot be filled in its entirety, it may be filled in part and the balance supplied by additional shipments within 60 days following the date of the DEA Form 222. No DEA Form 222 is valid more than 60 days after its execution by the purchaser, except as specified in paragraph (f) of this section.

* * * * *

(d) The supplier must retain the original DEA Form 222 for the supplier's files in accordance with § 1305.17(c). Any supplier who is not required to report acquisition/disposition transactions to the Automation of Reports and Consolidated Orders System (ARCOS) under § 1304.33(c) (such as a practitioner) must make and submit a copy of the original DEA Form 222 to DEA, either by mail to the Registration Section, or by email to *DEA.Orderforms@usdoj.gov.* The copy must be forwarded at the close of the month during which the order is filled. If an order is filled by partial shipments, the copy must be forwarded at the close of the month during which the final shipment is made or the 60-day validity period expires.

(e) The purchaser must record on its copy of the DEA Form 222 the number of commercial or bulk containers furnished on each item and the dates on which the containers are received by the purchaser.

* * * * *

■ 6. Amend § 1305.14 by revising the first two sentences of paragraph (a) and paragraph (b) to read as follows:

§ 1305.14 Procedure for endorsing DEA Forms 222.

(a) A DEA Form 222, made out to any supplier who cannot fill all or a part of the order within the time limitation set forth in § 1305.13, may be endorsed to another supplier for filling. The endorsement must be made only by the supplier to whom the DEA Form 222 was first made, must state (in the spaces provided in Part 3 on the original DEA Form 222) the DEA number of the second supplier, and must be signed and dated by a person authorized to obtain and execute DEA Forms 222 on behalf of the first supplier. * * *

(b) Distributions made on endorsed DEA Forms 222 must be reported by the second supplier in the same manner as all other distributions.

■ 7. Amend § 1305.15 by revising paragraphs (b) and (d) to read as follows:

§ 1305.15 Unaccepted and defective DEA Forms 222.

* * * * *

(b) If a DEA Form 222 cannot be filled for any reason under this section, the supplier must return the original DEA Form 222 to the purchaser with a statement as to the reason (*e.g.,* illegible or altered).

* * * * *

(d) When a purchaser receives an unaccepted order, the original DEA Form 222 and the statement must be retained in the files of the purchaser in accordance with § 1305.17. A defective DEA Form 222 may not be corrected; it must be replaced by a new DEA Form 222 for the order to be filled.

■ 8. Amend § 1305.16 by revising paragraphs (a) and (d) to read as follows:

§ 1305.16 Lost and stolen DEA Forms 222.

(a) If a purchaser ascertains that an unfilled DEA Form 222 has been lost, the purchaser must execute another and attach a statement containing the order form number and date of the lost form, and stating that the goods covered by the first DEA Form 222 were not received through loss of that DEA Form 222. A copy of the second form and a copy of the statement must be retained with a copy of the DEA Form 222 first executed. A copy of the statement must be attached to a copy of the second DEA Form 222 sent to the supplier. If the first DEA Form 222 is subsequently received by the supplier to whom it was directed, the supplier must mark upon the face ''Not accepted'' and return the original DEA Form 222 to the purchaser, who must attach it to the statement.

* * * * *

(d) If any DEA Forms 222 are lost or stolen, and the purchaser is unable to state the order form numbers of the DEA Forms 222, the purchaser must report, in lieu of numbers of the forms, the date or approximate date of issuance.

* * * * *

■ 9. Amend § 1305.17 by revising paragraphs (a), (b), and (c) and adding paragraph (e) to read as follows:

§ 1305.17 Preservation of DEA Forms 222.

(a) The purchaser must retain a copy of each executed DEA Form 222 and all copies of unaccepted or defective forms with each statement attached.

(b) The supplier must retain the original of each DEA Form 222 that it has filled.

(c) DEA Forms 222 must be maintained separately from all other records of the registrant. DEA Forms 222 are required to be kept available for inspection for a period of two years. If a purchaser has several registered locations, the purchaser must retain a copy of the executed DEA Form 222 and any attached statements or other related documents (not including unexecuted DEA Forms 222, which may be kept elsewhere under § 1305.12(e)), at the registered location printed on the DEA Form 222.

* * * * *

(e) Electronic copies of DEA Forms 222 will be deemed to be maintained separately from all other records of the registrant, for the purposes of this section, if such copies are readily retrievable separately from all other records. Electronic copies of DEA Forms 222 may be stored on a system at a location different from the registered location, provided such copies are readily retrievable at the registered location.

■ 10. Revise § 1305.18 to read as follows:

§ 1305.18 Return of unused DEA Forms 222.

If the registration of any purchaser terminates (because the purchaser dies, ceases legal existence, discontinues business or professional practice, or changes the name or address as shown on the purchaser's registration) or is suspended or revoked under § 1301.36 of this chapter for all Schedule I and II controlled substances for which the purchaser is registered, the purchaser must return all unused DEA Forms 222 to the Registration Section.

■ 11. Amend § 1305.19 by revising paragraph (a) to read as follows:

§ 1305.19 Cancellation and voiding of DEA Forms 222.

(a) A purchaser may cancel part or all of an order on a DEA Form 222 by notifying the supplier in writing of the cancellation. The supplier must indicate the cancellation on the original DEA Form 222 sent by the purchaser by drawing a line through the canceled items and printing ''canceled'' in the space provided for the number of items shipped.

* * * * *

■ 12. Add § 1305.20 to read as follows:

§ 1305.20 Transition provisions allowing continued use of existing stocks of triplicate DEA Forms 222.

Registrants may continue to use existing stocks of the triplicate DEA Form 222 until October 30, 2021. In any case, as soon as a registrant's supply of triplicate DEA Forms 222 is exhausted, the registrant must use the new single-sheet DEA Form 222. The provisions of this part are applicable to the use of triplicate forms, except for the specific rules as provided in this section.

(a) *Procedure for obtaining triplicate DEA Forms 222.* The DEA will no longer issue triplicate forms. Triplicate DEA

Forms 222 will not be accepted after October 30, 2021.

(b) *Procedure for executing triplicate DEA Forms 222.* (1) A purchaser must prepare and execute a triplicate DEA Form 222 simultaneously by means of interleaved carbon sheets that are part of the triplicate DEA Form 222. Triplicate DEA Form 222 must be prepared by use of a typewriter, pen, or indelible pencil.

(2) Only one item may be entered on each numbered line. An item must consist of one or more commercial or bulk containers of the same finished or bulk form and quantity of the same substance. The number of lines completed must be noted on that form at the bottom of the form, in the space provided. Triplicate DEA Forms 222 for carfentanil, etorphine hydrochloride, and diprenorphine must contain only these substances.

(3) The name and address of the supplier from whom the controlled substances are being ordered must be entered on the form. Only one supplier may be listed on any form.

(4) Each triplicate DEA Form 222 must be signed and dated by a person authorized to sign an application for registration or a person granted power of attorney to sign a DEA Form 222 under § 1305.05. The name of the purchaser, if different from the individual signing the DEA Form 222, must also be inserted in the signature space.

(5) Unexecuted DEA Forms 222 may be kept and may be executed at a location other than the registered location printed on the form, provided that all unexecuted forms are delivered promptly to the registered location upon an inspection of the location by any officer authorized to make inspections, or to enforce, any Federal, State, or local law regarding controlled substances.

(c) *Procedure for filling triplicate DEA Forms 222.* (1) A purchaser must submit Copy 1 and Copy 2 of the triplicate DEA Form 222 to the supplier and retain Copy 3 in the purchaser's files.

(2) A supplier may fill the order, if possible and if the supplier desires to do so, and must record on Copies 1 and 2 the number of commercial or bulk containers furnished on each item and the date on which the containers are shipped to the purchaser. If an order cannot be filled in its entirety, it may be filled in part and the balance supplied by additional shipments within 60 days following the date of the triplicate DEA Form 222. No triplicate DEA Form 222 is valid more than 60 days after its execution by the purchaser, except as specified in paragraph (c)(6) of this section.

(3) The controlled substances must be shipped only to the purchaser and the location printed by the Administration on the triplicate DEA Form 222, except as specified in paragraph (c)(6) of this section.

(4) The supplier must retain Copy 1 of the triplicate DEA Form 222 for his or her files in accordance with paragraph (g)(3) of this section and forward Copy 2 to the Special Agent in Charge of the Drug Enforcement Administration in the area in which the supplier is located. Copy 2 must be forwarded at the close of the month during which the order is filled. If an order is filled by partial shipments, Copy 2 must be forwarded at the close of the month during which the final shipment is made or the 60-day validity period expires.

(5) The purchaser must record on Copy 3 of the triplicate DEA Form 222 the number of commercial or bulk containers furnished on each item and the dates on which the containers are received by the purchaser.

(6) DEA triplicate Forms 222 submitted by registered procurement officers of the Defense Supply Center of the Defense Logistics Agency for delivery to armed services establishments within the United States may be shipped to locations other than the location printed on the triplicate DEA Form 222, and in partial shipments at different times not to exceed six months from the date of the order, as designated by the procurement officer when submitting the order.

(d) *Procedure for endorsing triplicate DEA Forms 222.* (1) A triplicate DEA Form 222, made out to any supplier who cannot fill all or a part of the order within the time limitation set forth in paragraph (c) of this section, may be endorsed to another supplier for filling. The endorsement must be made only by the supplier to whom the triplicate DEA Form 222 was first made, must state (in the spaces provided on the reverse sides of Copies 1 and 2 of the triplicate DEA Form 222) the name and address of the second supplier, and must be signed by a person authorized to obtain and execute triplicate DEA Forms 222 on behalf of the first supplier. The first supplier may not fill any part of an order on an endorsed form. The second supplier may fill the order, if possible and if the supplier desires to do so, in accordance with paragraphs (c)(2) through (4) of this section, including shipping all substances directly to the purchaser.

(2) Distributions made on endorsed triplicate DEA Forms 222 must be reported by the second supplier in the same manner as all other distributions.

(e) *Unaccepted and defective triplicate DEA Forms 222.* (1) A triplicate DEA Form 222 must not be filled if either of the following apply:

(i) The order is not complete, legible, or properly prepared, executed, or endorsed.

(ii) The order shows any alteration, erasure, or change of any description.

(2) If a triplicate DEA Form 222 cannot be filled for any reason under this section, the supplier must return Copies 1 and 2 to the purchaser with a statement as to the reason (*e.g.* illegible or altered).

(3) A supplier may for any reason refuse to accept any order and if a supplier refuses to accept the order, a statement that the order is not accepted is sufficient for purposes of this paragraph.

(4) When a purchaser receives an unaccepted order, Copies 1 and 2 of the triplicate DEA Form 222 and the statement must be attached to Copy 3 and retained in the files of the purchaser in accordance with paragraph (g) of this section. A defective triplicate DEA Form 222 may not be corrected; it must be replaced by a new triplicate DEA Form 222 for the order to be filled.

(f) *Lost and stolen triplicate DEA Forms 222.* (1) If a purchaser ascertains that an unfilled triplicate DEA Form 222 has been lost, the purchaser must execute another in triplicate and attach a statement containing the serial number and date of the lost form, and stating that the goods covered by the first triplicate DEA Form 222 were not received through loss of that triplicate DEA Form 222. Copy 3 of the second form and a copy of the statement must be retained with Copy 3 of the triplicate DEA Form 222 first executed. A copy of the statement must be attached to Copies 1 and 2 of the second triplicate DEA Form 222 sent to the supplier. If the first triplicate DEA Form 222 is subsequently received by the supplier to whom it was directed, the supplier must mark upon the face ''Not accepted'' and return Copies 1 and 2 to the purchaser, who must attach it to Copy 3 and the statement. However, if the registrant no longer can use triplicate forms, then the registrant shall proceed by issuing a new single-sheet form in accordance with § 1305.16.

(2) Whenever any used or unused triplicate DEA Forms 222 are stolen or lost (other than in the course of transmission) by any purchaser or supplier, the purchaser or supplier must immediately upon discovery of the theft or loss, report the theft or loss to the Special Agent in Charge of the Drug Enforcement Administration in the Divisional Office responsible for the area in which the registrant is located,

stating the serial number of each form stolen or lost.

(3) If the theft or loss includes any original triplicate DEA Forms 222 received from purchasers and the supplier is unable to state the serial numbers of the triplicate DEA Forms 222, the supplier must report the date or approximate date of receipt and the names and addresses of the purchasers.

(4) If an entire book of triplicate DEA Forms 222 is lost or stolen, and the purchaser is unable to state the serial numbers of the triplicate DEA Forms 222 in the book, the purchaser must report, in lieu of the numbers of the forms contained in the book, the date or approximate date of issuance.

(5) If any unused triplicate DEA Form 222 reported stolen or lost is subsequently recovered or found, the Special Agent in Charge of the Drug Enforcement Administration in the Divisional Office responsible for the area in which the registrant is located must immediately be notified.

(g) *Preservation of triplicate DEA Forms 222.* (1) The purchaser must retain Copy 3 of each executed triplicate DEA Form 222 and all copies of unaccepted or defective forms with each statement attached.

(2) The supplier must retain Copy 1 of each triplicate DEA Form 222 that it has filled.

(3) Triplicate DEA Forms 222 must be maintained separately from all other records of the registrant. Triplicate DEA Forms 222 are required to be kept available for inspection for a period of two years. If a purchaser has several registered locations, the purchaser must retain Copy 3 of the executed triplicate DEA Form 222 and any attached statements or other related documents (not including unexecuted triplicate DEA Forms 222, which may be kept elsewhere under paragraph (b)(5) of this section), at the registered location printed on the triplicate DEA Form 222.

(4) The supplier of thiafentanil, carfentanil, etorphine hydrochloride, and diprenorphine must maintain triplicate DEA Forms 222 for these substances separately from all other DEA triplicate Forms 222 and records required to be maintained by the registrant.

(h) *Return of unused triplicate DEA Forms 222.* If the registration of any purchaser terminates (because the purchaser dies, ceases legal existence, discontinues business or professional practice, or changes the name or address as shown on the purchaser's registration) or is suspended or revoked under § 1301.36 of this chapter for all schedule I and II controlled substances for which the purchaser is registered, the purchaser must return all unused triplicate DEA Forms 222 to the Registration Section.

(i) *Cancellation and voiding of triplicate DEA Forms 222.* (1) A purchaser may cancel part or all of an order on a triplicate DEA Form 222 by notifying the supplier in writing of the cancellation. The supplier must indicate the cancellation on Copies 1 and 2 of the triplicate DEA Form 222 by drawing a line through the canceled items and printing ''canceled'' in the space provided for the number of items shipped.

(2) A supplier may void part or all of an order on a triplicate DEA Form 222 by notifying the purchaser in writing of the voiding. The supplier must indicate the voiding in the manner prescribed for cancellation in paragraph (i)(1) of this section.

Dated: September 23, 2019.

Uttam Dhillon,

Acting Administrator.

[FR Doc. 2019–21021 Filed 9–27–19; 8:45 am]

BILLING CODE 4410–09–P

DEPARTMENT OF LABOR

Occupational Safety and Health Administration

29 CFR Parts 1915 and 1926

[Docket No. OSHA–H005C–2006–0870]

RIN 1218–AD21

Occupational Exposure to Beryllium and Beryllium Compounds in Construction and Shipyard Sectors

AGENCY: Occupational Safety and Health Administration (OSHA), Labor.

ACTION: Final rule.

SUMMARY: OSHA is finalizing the proposed rule on occupational exposure to beryllium and beryllium compounds in construction and shipyards by delaying the compliance deadlines for nearly all provisions of the standards to September 30, 2020. The one exception to the September 30, 2020 compliance deadline is for the permissible exposure limit (PEL) and the short-term exposure limit (STEL), which OSHA has been enforcing since May 11, 2018. This rule confirms that the exposure limits remain in effect. OSHA is not adopting the portion of the proposed rule that would have revised OSHA's existing beryllium standards for construction and shipyards to revoke the ancillary provisions. OSHA finds that other OSHA standards do not duplicate the requirements of the ancillary provisions in the beryllium standards for construction and shipyards in their entirety. Thus revoking all of the ancillary provisions and leaving only the PEL and STEL would be inconsistent with OSHA's statutory mandate to protect workers from the demonstrated significant risks of material impairment of health resulting from exposure to beryllium and beryllium compounds. OSHA will publish a new proposal for the construction and shipyards beryllium standards, to seek comment on different changes OSHA is considering.

DATES: This rule is effective September 30, 2019.

ADDRESSES: For purposes of 28 U.S.C. 2112(a), OSHA designates Edmund C. Baird, Associate Solicitor of Labor for Occupational Safety and Health, to receive petitions for review of the final rule. Contact the Associate Solicitor at the Office of the Solicitor, Room S–4004, U.S. Department of Labor, 200 Constitution Avenue NW, Washington, DC 20210; telephone: (202) 693–5445.

Copies of this ***Federal Register*** *document and news releases:* Electronic copies of these documents are available at OSHA's web page at *https://www.osha.gov.*

FOR FURTHER INFORMATION CONTACT:

Press inquiries: Mr. Frank Meilinger, OSHA Office of Communications; telephone: (202) 693–1999; email: *meilinger.francis2@dol.gov.*

General information and technical inquiries: Mr. William Perry or Ms. Maureen Ruskin, Directorate of Standards and Guidance, Occupational Safety and Health Administration; telephone: (202) 693–1950; email: *perry.bill@dol.gov.*

SUPPLEMENTARY INFORMATION:

Table of Contents

I. Executive Summary
II. Pertinent Legal Authority
III. Events Leading to the Final Rule
IV. Final Economic Analysis
V. OMB Review Under the Paperwork Reduction Act of 1995
VI. Federalism
VII. State Plan States
VIII. Unfunded Mandates Reform Act
IX. Environmental Impacts
X. Consultation and Coordination With Indian Tribal Governments
XI. Health and Risk
XII. Summary and Explanation of the Final Rule
Authority and Signature
Amendments to Standards

Citation Method

In the docket for the beryllium rulemaking, found at *http://www.regulations.gov,* every submission

was assigned a document identification (ID) number that consists of the docket number (OSHA–H005C–2006–0870) followed by an additional four-digit number. For example, the document ID number for OSHA's Preliminary Economic Analysis and Initial Regulatory Flexibility Analysis is OSHA–H005C–2006–0870–0426. Some document ID numbers include one or more attachments (see, *e.g.,* Document ID OSHA–H005C–2006–0870–2142).

When citing exhibits in the docket, OSHA includes the term ''Document ID'' followed by the last four digits of the document ID number, the attachment number or other attachment identifier, if necessary for clarity, and page numbers (designated ''p.'' or ''Tr.'' for pages from a hearing transcript). In a citation that contains two or more document ID numbers, the document ID numbers are separated by semicolons.

I. Executive Summary

On June 27, 2017, OSHA published a proposed rule on Occupational Exposure to Beryllium and Beryllium Compounds in Construction and Shipyards (82 FR 29182). In it, OSHA proposed revoking the ancillary provisions in the beryllium standards for construction (29 CFR 1926.1124) and shipyards (29 CFR 1915.1024), while retaining the PEL of 0.2 ug/m^3 and the STEL of 2.0 ug/m^3. The basis for the proposal was that other OSHA standards apply to the primary operations in which exposures to beryllium occur in construction (abrasive blasting) and shipyards (abrasive blasting and welding), and that those other standards might adequately protect workers from exposure to beryllium in those operations. OSHA asked for comment on whether such an approach would provide adequate protection, and whether OSHA should retain any or all of the ancillary provisions (82 FR at 29183). OSHA also requested comment on whether OSHA should retain the medical surveillance provisions in particular (82 FR at 29183). Finally, OSHA stated that it was considering extending the compliance dates for the construction and shipyards standards for a year in order to ''give affected employers additional time to come into compliance with its requirements, which could be warranted by the uncertainty created by this proposal'' (82 FR at 29183).

OSHA has decided not to proceed with the proposed revocation of the construction and shipyards standards' ancillary provisions. As discussed herein, the agency has determined that there is not complete overlap in protections between the standards' ancillary provisions and other OSHA standards. Therefore, because of its statutory responsibility to protect workers who face significant risk of material impairment of health from beryllium exposure, the agency cannot issue a final rule revoking all of the ancillary provisions in the standards. To the extent there is overlap between specific requirements within the ancillary provisions and other OSHA standards, OSHA will account for that overlap in the new proposal. In that rulemaking, OSHA will provide the public with notice of the more limited changes the agency believes may be appropriate, either because there is some measure of overlap with other OSHA standards or for separate reasons, such as to make the standards more consistent with the changes OSHA has made, or proposed to make, to the general industry standard for beryllium (see 83 FR 31045; 83 FR 63746) in the period since OSHA issued the construction and shipyards proposal in June 2017.

After careful consideration of the comments and information received in response to the proposal, OSHA is delaying the compliance dates for all ancillary provisions of the construction and shipyards standards for beryllium until September 30, 2020. This final rule has no effect on compliance with the PEL and STEL requirements of the standards, which have been enforced since May 2018. OSHA's decision to delay compliance obligations for the ancillary provisions reflects the agency's determination that it would be unreasonable to expect employers to comply by the dates in the 2017 final rule given the agency's decisions to retain all ancillary provisions in this final rule and proceed with a separate rulemaking to propose different amendments to the standards. The uncertainty inherent in this regulatory posture makes additional time essential. Requiring compliance with the 2017 final rule, or even requiring employers to expend time and money to determine how to comply with the 2017 final rule, would make little sense when the standards may ultimately be amended via the forthcoming rulemaking.

II. Pertinent Legal Authority

The purpose of the Occupational Safety and Health Act of 1970 (''the OSH Act'' or ''the Act''), 29 U.S.C. 651 et al., is ''to assure so far as possible every working man and woman in the Nation safe and healthful working conditions and to preserve our human resources'' (29 U.S.C. 651(b)). To achieve this goal, Congress authorized the Secretary of Labor to promulgate occupational safety and health standards pursuant to notice and comment (see 29 U.S.C. 655(b)).

An occupational safety or health standard is a standard ''which requires conditions, or the adoption or use of one or more practices, means, methods, operations, or processes, reasonably necessary or appropriate to provide safe or healthful employment and places of employment'' (29 U.S.C. 652(8)). The Act provides that in promulgating health standards dealing with toxic materials or harmful physical agents, such as the January 9, 2017, final rule regulating occupational exposure to beryllium, the Secretary must set the standard which most adequately assures, to the extent feasible, on the basis of the best available evidence that no employee will suffer material impairment of health or functional capacity even if such employee has regular exposure to the hazard dealt with by such standard for the period of his working life (29 U.S.C. 655(b)(5)).

The Supreme Court has held that before the Secretary can promulgate any permanent health or safety standard, he must make a threshold finding that significant risk is present and that such risk can be eliminated or lessened by a change in practices (see *Industrial Union Dept., AFL-CIO* v. *Am. Petroleum Inst.,* 448 U.S. 607, 641–42 (1980) (plurality opinion) (''*Benzene*'')). Thus, section 6(b)(5) of the Act requires health standards to reduce significant risk to the extent feasible (see id.).

The Court further observed that what constitutes ''significant risk'' is ''not a mathematical straitjacket'' and must be ''based largely on policy considerations'' (Id. at 655, 655 n.62). OSHA retains:

> great discretion . . . under Section 3(8) [of the Act], especially in an area where scientific certainty is impossible. In the first instance, it is the agency itself that determines the existence of a ''significant'' risk. . . . In making the difficult judgment as to what level of harm is unacceptable, the agency may rely on its own sound ''considerations of policy'' as well as hard factual data. . . .

(*United Steelworkers* v. *Marshall,* 647 F.2d 1189, 1248 (D.C. Cir. 1980) (''*Lead I*'') (internal citations omitted)). When evaluating such considerations, OSHA exercises its discretion and its ''delegated power to make within certain limits decisions that Congress normally makes itself'' (*Industrial Union Dept., AFL–CIO* v. *Hodgson,* 499 F.2d 467, 475 (D.C. Cir. 1974)). Accordingly, OSHA's discretionary authority under the Act is broad (see *Lead I,* 647 F.2d at 1230). Indeed, a number of terms of the statute give

OSHA wide discretion to devise means to achieve the congressionally mandated goal of ensuring worker safety and health (Id.). Once OSHA makes its significant risk finding, the standard must be ''reasonably necessary or appropriate'' to reduce or eliminate that risk within the meaning of section 3(8) of the Act, 29 U.S.C. 652(8), and *Benzene,* 448 U.S. at 642 (see *Bldg. and Constr. Trades Dep't* v. *Brock,* 838 F.2d 1258, 1269 (D.C. Cir. 1988) (''*Asbestos II*'')). In choosing among regulatory alternatives, however, ''[t]he determination that [one standard] is appropriate, as opposed to a marginally [more or less protective] standard, is a technical decision entrusted to the expertise of the agency'' (*Nat'l Mining Ass'n* v. *Mine Safety and Health Admin.,* 116 F.3d 520, 528 (D.C. Cir. 1997) (analyzing a Mine Safety and Health Administration standard under the *Benzene* significant risk standard)). Where there is significant risk below the PEL, OSHA should use its regulatory authority to impose additional requirements on employers when those requirements will result in a greater than de minimis incremental benefit to workers' health (see *Asbestos II,* 838 F.2d at 1274).

The Act also authorizes the Secretary to modify any occupational safety or health standard. 29 U.S.C. 655(b). The Supreme Court has acknowledged that regulatory agencies do not establish rules of conduct to last forever, and agencies may revise their rules if supported by a reasoned analysis for the change (see *Motor Vehicle Mfrs. Ass'n* v. *State Farm Mut. Auto. Ins. Co.,* 463 U.S. 29, 42 (1983)). While ''it may be easier for an agency to justify a deregulatory action, the direction in which an agency chooses to move does not alter the standard of judicial review established by law'' (Id. at 43).

OSHA is required to set standards ''on the basis of the best available evidence,'' 29 U.S.C. 655(b)(5), and its determinations are ''conclusive'' if supported by ''substantial evidence in the record considered as a whole,'' 29 U.S.C. 655(f). As noted above, the Supreme Court, in *Benzene,* explained that OSHA must look to ''a body of reputable scientific thought'' in making its determinations, while noting that a reviewing court must ''give OSHA some leeway where its findings must be made on the frontiers of scientific knowledge'' (448 U.S. at 656). When there is disputed scientific evidence in the record, OSHA must review the evidence on both sides and ''reasonably resolve'' the dispute (*Pub. Citizen Health Research Grp.* v. *Tyson,* 796 F.2d 1479, 1500 (D.C. Cir. 1986)). As the D.C. Circuit has noted, where ''OSHA has the expertise we lack and it has exercised that expertise by carefully reviewing the scientific data,'' a dispute within the scientific community is not occasion for the reviewing court to take sides about which view is correct (Id.).

OSHA standards must be both technologically and economically feasible (see *Lead I,* 647 F.2d at 1264). The Supreme Court has defined feasibility as ''capable of being done'' (*Am. Textile Mfrs. Inst.* v. *Donovan,* 452 U.S. 490, 509–10 (1981) (''*Cotton Dust*'')). The courts have further clarified that a standard is technologically feasible if OSHA proves a reasonable possibility, ''within the limits of the best available evidence, . . . that the typical firm will be able to develop and install engineering and work practice controls that can meet the PEL in most of its operations'' (*Lead I,* 647 F.2d at 1272).

With respect to economic feasibility, the courts have held that ''a standard is feasible if it does not threaten massive dislocation to or imperil the existence of the industry'' (Id. at 1265 (internal quotation marks and citations omitted)). A court must examine the cost of compliance with an OSHA standard:

> in relation to the financial health and profitability of the industry and the likely effect of such costs on unit consumer prices . . . . [T]he practical question is whether the standard threatens the competitive stability of an industry, . . . or whether any intra-industry or inter-industry discrimination in the standard might wreck such stability or lead to undue concentration.

(Id. (internal citations omitted)). The courts have further observed that granting companies reasonable time to comply with new PELs may enhance economic feasibility (see Id.).

Because section 6(b)(5) of the Act explicitly imposes the ''to the extent feasible'' limitation on the setting of health standards, OSHA is not permitted to use cost-benefit analysis to make its standards-setting decisions (29 U.S.C. 655(b)(5)). An OSHA standard must be cost effective, which means that the protective measures it requires are the least costly of the available alternatives that achieve the same level of protection, but OSHA cannot choose an alternative that provides a lower level of protection because it is less costly (see *Int'l Union, UAW* v. *OSHA,* 37 F.3d 655, 668 (D.C. Cir. 1994); see also *Cotton Dust,* 452 U.S. at 514 n.32).

III. Events Leading to the Final Rule

On January 9, 2017, OSHA published its final rule Occupational Exposure to Beryllium and Beryllium Compounds in the **Federal Register** (82 FR 2470–2757). OSHA issued three separate standards for general industry (29 CFR 1910.1024), construction (29 CFR 1926.1124), and shipyards (29 CFR 1915.1024). Each standard contained a new, lower PEL of 0.2 μg/m^3 and a STEL of 2.0 μg/m^3, along with ancillary provisions to augment the protection provided by the new exposure limits. The ancillary provisions included requirements for exposure assessment, methods for controlling exposure, respiratory protection, personal protective clothing and equipment (PPE), housekeeping, medical surveillance, hazard communication, and recordkeeping.

On June 27, 2017, OSHA published an NPRM proposing to revoke the ancillary provisions for both the construction and shipyards standards while retaining the new lower PEL of 0.2 μg/m^3 and STEL of 2.0 μg/m^3 for those sectors (82 FR 29182).[1] OSHA stated in the proposal that it was also considering extending the compliance dates in the January 9, 2017, final rule by a year for the construction and shipyard standards. OSHA reasoned that this potential extension would give affected employers additional time to come into compliance with the final rule's requirements, which could be warranted by the uncertainty created by the proposal. OSHA also stated in the proposal that it would not enforce the construction and shipyards standards without further notice while the rulemaking was underway.[2] OSHA gave the public 60 days to comment on the proposal, and received about 70 unique comments, which OSHA carefully reviewed in developing this final rule.

On May 7, 2018, OSHA issued a direct final rule (DFR) adopting a number of clarifying amendments to the general industry standard to address the application of that standard to materials containing trace amounts of beryllium (83 FR 19936). The DFR amended the text of the general industry standard to clarify OSHA's intent with respect to certain terms in the standard, including the definition of beryllium work area, the definition of emergency, and the meaning of the terms dermal contact and beryllium contamination. The DFR also clarified OSHA's intent with respect to provisions for disposal and recycling and with respect to provisions

[1] For a more comprehensive discussion of the events leading to the proposed rule, see the preamble to the 2017 NPRM (82 FR at 29185–88).

[2] Subsequently, in March 2018, OSHA stated that it would begin enforcing the PEL and STEL on May 11, 2018 (see Memorandum for Regional Administrators, Delay of Enforcement of the Beryllium Standards under 29 CFR 1910.1024, 29 CFR 1915.1024, and 29 CFR 1926.1124, Mar. 2, 2018, available at: *https://www.osha.gov/laws-regs/standardinterpretations/2018-03-02*).

that the agency intended to apply only where skin can be exposed to materials containing at least 0.1% beryllium by weight. The DFR became effective on July 6, 2018, because OSHA did not receive significant adverse comment in response to the DFR (see 83 FR 31045).

On June 1, 2018, OSHA published a proposal to extend the compliance date for certain ancillary requirements of the general industry beryllium standard, from March 12, 2018, to December 12, 2018 (83 FR 25536). OSHA proposed to delay the compliance dates for the following provisions in the general industry standard: Beryllium work areas and regulated areas (paragraph (e)), written exposure control plans (paragraph (f)(1)), personal protective clothing and equipment (paragraph (h)), hygiene areas and practices (paragraph (i) except for change rooms and showers), housekeeping (paragraph (j)), communication of hazards (paragraph (m)), and recordkeeping (paragraph (n)). OSHA reasoned that: (1) It planned to propose modifications to ancillary provisions of the beryllium general industry standard in response to stakeholder questions and concerns; (2) it would be undesirable for both the agency and the regulated community to begin enforcement of the ancillary provisions of the standard that would be affected by the upcoming rulemaking; (3) enforcing compliance with the relevant ancillary requirements, as currently written, before publishing the agreed-upon proposal, would likely result in employers taking unnecessary measures to comply with provisions that OSHA intended to clarify; and (4) the proposed compliance date extension would give OSHA time to prepare and publish the planned substantive general industry NPRM to amend the standard before employers were required to comply with the affected provisions of the rule. OSHA adopted the extension of the compliance dates, as proposed, on August 9, 2018 (83 FR 39351).

On December 11, 2018, OSHA published a substantive NPRM to modify several of the general industry beryllium standard's definitions, along with the provisions for methods of compliance, personal protective clothing and equipment, hygiene areas and practices, housekeeping, medical surveillance, communication of hazards, and recordkeeping (83 FR 63746). OSHA reasoned in part that the proposed modifications would provide clarification and simplify or improve compliance.

IV. Final Economic Analysis

A. Summary of Economic Impact

OMB has determined that this final rule is not economically significant. The rule revises 29 CFR 1915.1024(o)(2) and 29 CFR 1926.1124(o)(2) to extend the deadline for compliance with certain provisions of the construction and shipyards beryllium standards until September 30, 2020. OSHA's final economic analysis shows that this compliance date extension will result in a net cost savings for the affected industries. At a 3 percent discount rate over 10 years, the extension will result in net annual cost savings of $0.36 million per year; at a discount rate of 7 percent over 10 years, the net annual cost savings is $0.85 million per year. When the Department uses a perpetual time horizon, the annualized cost savings of the final rule is $0.42 million with a 7 percent discount rate. The rule is an Executive Order (E.O.) 13771 deregulatory action.

B. Final Economic Analysis and Regulatory Flexibility Certification

Executive Orders 12866 and 13563, the Regulatory Flexibility Act (5 U.S.C. 601–612), and the Unfunded Mandates Reform Act (UMRA) (2 U.S.C. 1532(a)) require that OSHA estimate the benefits, costs, and net benefits of regulations, and analyze the effects of certain rules that OSHA promulgates. Executive Order 13563 emphasizes the importance of quantifying both costs and benefits, reducing costs, harmonizing rules, and promoting flexibility.

This final rule is not an ''economically significant regulatory action'' under E.O. 12866 or UMRA, or a ''major rule'' under the Congressional Review Act (5 U.S.C. 801 *et seq.*). Neither the benefits nor the costs of this final rule would exceed $100 million in any given year. This final rule to extend the compliance dates for the ancillary provisions in the construction and shipyards beryllium standards results in cost savings. Cost savings arise in this context because a delay in incurred costs for employers would allow them to invest the funds (and earn an expected return at the going interest rate) that would otherwise have been spent to comply with those provisions.

At a discount rate of 3 percent, this final compliance-date extension yields annualized cost savings of $0.36 million per year for 10 years. At a discount rate of 7 percent, this final rule yields an annualized cost savings of $0.85 million per year for 10 years. When the Department uses a perpetual time horizon to allow for cost comparisons under E.O. 13771 (82 FR 9339, Jan. 30, 2017), the annualized cost savings of this final compliance date extension are $0.42 million at a discount rate of 7 percent.

1. Changes to the Baseline: Updating to 2018 Dollars and Removing Familiarization Costs; Discussion of Overhead Costs

Because more than two years have elapsed since promulgation of the beryllium standards on January 9, 2017, OSHA has updated the projected costs for construction and shipyards contained in the final economic analysis that accompanied the rule from 2015 to 2018 dollars using the latest Occupational Employment Statistics (OES) wage data (for 2018). Additionally, although familiarization costs were included in the cost estimates developed in the 2017 final economic analysis, OSHA expects that those costs have already been incurred by affected employers,[3] and is excluding them from its analysis of the cost savings associated with this extension of compliance dates. Thus, baseline costs for this final economic analysis (FEA) are the projected costs from the 2017 final economic analysis, updated to 2018 dollars, less familiarization costs.

OSHA notes that it did not include an overhead labor cost in the 2017 analysis and has not accounted for such costs in this FEA. There is not one broadly accepted overhead rate, and the use of overhead to estimate the marginal costs of labor raises a number of issues that should be addressed before applying overhead costs to analyze the cost implications of any specific regulation. There are several ways to look at the cost elements that fit the definition of overhead, and there is a range of overhead estimates currently used within the federal government—for example, the Environmental Protection Agency has used 17 percent,[4] and government contractors have reportedly used 50 percent for on-site (*i.e.* company site) overhead.[5] Some

[3] In the 2017 NPRM, the agency estimated no cost savings for familiarization with the new beryllium standards because it believed all rule familiarization costs had already been incurred (82 FR at 29209). The agency received no comments disagreeing with this estimate.

[4] Cody Rice, U.S. Environmental Protection Agency, ''Wage Rates for Economic Analyses of the Toxics Release Inventory Program,'' June 10, 2002 (Document ID 2025). This analysis itself was based on a survey of several large chemical manufacturing plants: Heiden Associates, Final Report: A Study of Industry Compliance Costs Under the Final Comprehensive Assessment Information Rule, Prepared for the Chemical Manufacturers Association, December 14, 1989.

[5] Grant Thornton LLP, *2017 Government Contractor Survey, https://www.grantthornton.com/-/media/content-page-files/public-sector/pdfs/*

overhead costs, such as advertising and marketing, may be more closely correlated with output than with labor. Other overhead costs vary with the number of new employees. For example, rent or payroll processing costs may change little with the addition of 1 employee in a 500-employee firm, but may change substantially with the addition of 100 employees. If an employer is able to rearrange current employees' duties to implement a rule, then the marginal share of overhead costs, such as rent, insurance, and major office equipment (*e.g.,* computers, printers, copiers), would be very difficult to measure with accuracy.

If OSHA had included an overhead rate when estimating the marginal cost of labor, without further analyzing an appropriate quantitative adjustment, and adopted for these purposes an overhead rate of 17 percent on base wages, the cost savings of this final rule would increase to approximately $0.37 million per year, at a discount rate of 3 percent, or to approximately $0.87 million per year, at a discount rate of 7 percent.[6] The addition of 17 percent overhead on base wages would therefore increase cost savings by approximately 3.5 percent above the primary estimate at either discount rate.

2. Changes to the Standard: Extension of the Compliance Date to September 30, 2020

The construction and shipyards beryllium standards went into effect on May 20, 2017, with most compliance obligations set to begin on March 12, 2018. The requirement in the shipyards standard to provide change rooms was set to commence on March 11, 2019, and engineering controls under paragraph (f) expected to be implemented by March 10, 2020. In the June 2017 construction and shipyards proposal, OSHA stated that it would ''not enforce the January 9, 2017, shipyard and construction standards without further notice while this new rulemaking is underway'' (82 FR at 29182, 29223). Subsequently, in March 2018, OSHA stated that it would begin enforcing the PEL and STEL on May 11, 2018 (see Memorandum for Regional Administrators, Delay of Enforcement of the Beryllium Standards under 29 CFR 1910.1024, 29 CFR 1915.1024, and 29 CFR 1926.1124, Mar. 2, 2018, available at: *https://www.osha.gov/laws-regs/standardinterpretations/2018-03-02*). OSHA clarified in a May 9, 2018, interim enforcement memorandum that it would begin enforcing the construction and shipyards beryllium standards' PEL and STEL on May 11, 2018, but would not enforce any other provisions of those standards absent further notice (see Interim Enforcement Memorandum and Notice of Delay in Enforcement for Certain Provisions of the Beryllium Standards, May 9, 2018, available at: *https://www.osha.gov/laws-regs/standardinterpretations/2018-05-09*). This final rule delays the compliance date for most ancillary provisions by one year from the date of publication of this rule and delays the requirement to implement engineering controls by half a year. This delay provides time for OSHA to issue a revised proposal and final rule modifying the ancillary provisions of the construction and shipyard standards and will allow employers to avoid the undue costs of complying with standards that may change in the near future. Note that the PEL and STEL compliance dates will not be extended as those requirements have already gone into effect and are being enforced.

OSHA estimated the cost savings of the final rule relative to baseline costs, where baseline costs reflect the costs of compliance *without* the final rule's changes to the compliance dates. This final rule extends the compliance dates for all provisions except the PEL and STEL to one year after the publication date of this final rule. In the 2017 final economic analysis, the cost of compliance with the PEL and STEL was calculated as the cost of respiratory protection for employees exposed over the PEL and STEL because until the compliance date for the engineering controls provision, employers were permitted to use respirators to comply with the PEL and STEL. Hence, there are no cost savings due to respirators. Because the exact publication date of this final rule was uncertain at the time this FEA was being prepared but was expected to be in September 2019, OSHA rounded the baseline and compliance dates to March and September, rather than calendar days.

This results in the following extensions:

- For engineering controls, the compliance date will be extended by 0.5 years.
- For all ancillary provisions, the compliance date will be extended by 1 year from the date of publication of this rule.[7]

OSHA commonly estimates annualized costs over a ten-year period and will do so here. For the baseline, OSHA estimates 10 years of costs, starting in March of 2020 for engineering controls and in September of 2019 for all ancillary provision costs. OSHA then calculates the present values of these costs as of September of 2019 using the appropriate discount rate. Similarly, to calculate the cost of the construction and shipyard beryllium standards as modified by this date extension final rule, OSHA estimates 10 years of costs for all ancillary provisions starting in September of 2020 and again creates present values as of September of 2019. The difference between the present values across the two cases gives total cost savings of this final rule. Annualizing the present value of cost savings over ten years, the result is an annualized cost savings of $0.36 million per year at a discount rate of 3 percent, or $0.85 million per year at a discount rate of 7 percent. When the Department uses a perpetual time horizon to allow for cost comparisons under E.O. 13771, the annualized cost savings of this compliance date extension is $0.42 million at a discount rate of 7 percent.

The cost savings for the baseline and compliance date extension by provision and year are presented below in Table 1 at undiscounted, 3 percent, and 7 percent values. As shown in Table 1, and described elsewhere in this final rule, the cost savings described in this FEA reflect savings only for provisions covered by the compliance date extension. The present value of costs for each provision by period and discount rate are shown below in Table 2 and the present value of costs for each provision by period, discount rate, and industry are shown in Table 3.

3. Economic and Technological Feasibility

In the final economic analysis for the 2017 construction and shipyards

surveys/2018/2017-government-contractor-survey. According to Grant Thornton's *2017 Government Contractor Survey,* on-site rates are generally higher than off-site rates, because the on-site overhead pool includes the facility-related expenses incurred by the company to house the employee, while no such expenses are incurred or allocated to the labor costs of direct charging personnel who work at the customer site. For further examples of overhead cost estimates, see the Employee Benefits Security Administration's guidance at *https://www.dol.gov/sites/dolgov/files/ebsa/laws-and-regulations/rules-and-regulations/technical-appendices/labor-cost-inputs-used-in-ebsa-opr-ria-and-pra-burden-calculations-july-2017.pdf.*

[6] OSHA used an overhead rate of 17 percent on base wages in a sensitivity analysis in the FEA (OSHA–2010–0034–4247, p. VII–65) in support of the March 25, 2016, final respirable crystalline silica standards (81 FR 16286) and in the PEA in support of the June 27, 2017, beryllium proposal for the construction and shipyard sectors (82 FR at 29201).

[7] For the purposes of this FEA, respirators are not considered to be among the ancillary provisions because employers are permitted to use respirators to comply with the PEL and STEL until the engineering controls provision becomes enforceable; OSHA therefore attributed the cost of respirators to compliance with the PEL and STEL.

beryllium standards, OSHA concluded that the standards were technologically feasible. OSHA has determined that the standards as modified by this final rule are also technologically feasible because the rule does not change any of the standards' substantive requirements and simply gives employers more time to comply with the standards' requirements. Furthermore, OSHA previously concluded that the beryllium standards were economically feasible. As this final rule does not impose any new substantive requirements, and results in cost savings, OSHA has concluded that the standards as modified by this final rule are also economically feasible.

4. Effects on Benefits

This final rule delays the compliance date for most ancillary provisions by one year and delays the requirement to implement engineering controls by half a year. This delay provides time for OSHA to issue a revised proposal modifying the ancillary provisions of the construction and shipyard standards and allows employers to avoid the undue costs of complying with standards that may change in the near future.

In the 2017 construction and shipyards proposal, OSHA explained it believed that it had underestimated baseline compliance with the ancillary provisions in the 2017 final rule. As such, OSHA stated it believed there would be limited to no benefits, in terms of reduced cases of chronic beryllium disease (CBD), attributable to the ancillary provisions, and thus limited to no foregone benefits if the ancillary provisions were to be revoked. However, many commenters pointed out that other existing standards did not provide protection identical to the ancillary provisions of the beryllium standards, so baseline compliance was not actually as high as OSHA believed in the 2017 proposal to revoke the ancillary provisions. For example, the United Steelworkers (USW) commented that the shipyard employer at which its members work as abrasive blasters ''does not have a system in place to monitor for exposure to beryllium in the air or monitor the health of their co-workers'' (Document ID 2124, p. 2). The American Federation of Labor and Congress of Industrial Organizations (AFL–CIO) commented that medical surveillance and hazard communication are necessary because beryllium-related diseases are often misdiagnosed as other respiratory diseases, and medical surveillance under the beryllium standards would address this by specifically screening for beryllium-related disease, while hazard communication and training under the beryllium standards would educate workers who often do not know they are exposed on how to handle and use beryllium more safely. (Document ID 2140, pp. 8–9). This means that while other OSHA standards may require some medical screening and training, there is not complete overlap—and therefore not 100% baseline compliance—with the beryllium medical surveillance provisions or the training requirements specific to beryllium.

In light of these and other similar comments, OSHA recognizes that, while it is possible that baseline compliance is higher for some provisions than was estimated in the 2017 final rule, baseline compliance with other provisions may not be as high as it believed in the 2017 proposal. OSHA has decided not to revoke all of the ancillary provisions in the construction and shipyard sectors so that it may issue a new proposal for these sectors with a revised collection of ancillary provisions that is appropriate for those sectors. OSHA expects this revised collection of ancillary provisions to maintain the protections and benefits of the 2017 final rule, and will make it more likely that the regulated community will realize the full benefits of the rule, as estimated in the 2017 final economic analysis. OSHA believes that any short-term loss of benefits associated with this extension of compliance dates will be offset in the long term by the benefits resulting from the agency's proposed rulemaking.

5. Certification of no Significant Impact on a Substantial Number of Small Entities

This final rule will result in cost savings for affected employers, and those savings fall below levels that would have a significant positive economic impact on a substantial number of small entities.[8] Therefore, OSHA certifies that this final rule does not have a significant impact on a substantial number of small entities.

BILLING CODE 4510–26–P

[8] OSHA investigated whether the projected cost savings would exceed its threshold of 1 percent of revenues or 5 percent of profits for small entities and very small entities for every industry. To determine if this was the case, OSHA returned to its original regulatory flexibility analysis (in the 2017 FEA) for small entities and very small entities. OSHA found that the cost savings of this final rule are such a small percentage of revenues and profits for every affected industry that OSHA's threshold would not be exceeded for any industry.

Table 1: Cost Savings of the Extension Rule by Year and Provision (2018 Dollars)

Year	Undiscounted Cost by Year				Discounted Costs - Baseline				Discounted Costs - Delay				Difference
	Engineering Controls and Work Practices	Ancillary Provisions	Respir-ators	Total	Engineer-ing Controls and Work Practices	Ancillary Provisions	Respir-ators	Total	Engineer-ing Controls and Work Practices	Ancillary Provisions	Respir-ators	Total	Total
3% Discount Rate													
1	$62,664	$21,339,162	$83,401	$21,485,227	$61,744	$21,339,162	$83,401	$21,484,307	$60,839	$20,717,633	$83,401	$20,861,873	-$622,435
2	$15,160	$10,282,661	$43,278	$10,341,098	$14,502	$9,983,166	$42,017	$10,039,686	$14,290	$9,692,394	$42,017	$9,748,701	-$290,985
3	$15,160	$10,953,330	$44,949	$11,013,439	$14,080	$10,324,564	$42,369	$10,381,013	$13,873	$10,023,849	$42,369	$10,080,091	-$300,922
4	$15,160	$10,456,238	$48,633	$10,520,031	$13,670	$9,568,939	$44,506	$9,627,116	$13,469	$9,290,232	$44,506	$9,348,208	-$278,908
5	$15,160	$10,840,594	$44,949	$10,900,703	$13,272	$9,631,728	$39,937	$9,684,936	$13,077	$9,351,192	$39,937	$9,404,206	-$280,730
6	$15,160	$10,528,920	$43,278	$10,587,357	$12,885	$9,082,339	$37,332	$9,132,556	$12,696	$8,817,805	$37,332	$8,867,832	-$264,723
7	$15,160	$10,793,458	$50,305	$10,858,922	$12,510	$9,039,351	$42,130	$9,093,990	$12,326	$8,776,069	$42,130	$8,830,525	-$263,466
8	$15,160	$10,560,311	$43,278	$10,618,748	$12,145	$8,586,499	$35,189	$8,633,833	$11,967	$8,336,407	$35,189	$8,383,563	-$250,270
9	$15,160	$10,772,025	$44,949	$10,832,134	$11,792	$8,503,536	$35,483	$8,550,811	$11,619	$8,255,860	$35,483	$8,302,962	-$247,849
10	$15,160	$10,574,631	$48,633	$10,638,424	$11,448	$8,104,574	$37,273	$8,153,296	$11,280	$7,868,518	$37,273	$7,917,072	-$236,224
Total	**$199,102**	**$117,101,329**	**$495,653**	**$117,796,085**	**$178,049**	**$104,163,857**	**$439,637**	**$104,781,543**	**$175,437**	**$101,129,958**	**$439,637**	**$101,745,032**	**-$3,036,511**
Annualized Total (3%)	**—**	**—**	**—**	**—**	**$20,873**	**$12,211,182**	**$51,539**	**$12,283,593**	**$20,567**	**$11,855,516**	**$51,539**	**$11,927,622**	**-$355,972**
7% Discount Rate													
1	$62,664	$21,339,162	$83,401	$21,485,227	$60,579	$21,339,162	$83,401	$21,483,142	$58,564	$19,943,142	$83,401	$20,085,107	-$1,398,035
2	$15,160	$10,282,661	$43,278	$10,341,098	$13,697	$9,609,964	$40,446	$9,664,107	$13,241	$8,981,274	$40,446	$9,034,962	-$629,145
3	$15,160	$10,953,330	$44,949	$11,013,439	$12,801	$9,567,063	$39,260	$9,619,124	$12,375	$8,941,180	$39,260	$8,992,815	-$626,308
4	$15,160	$10,456,238	$48,633	$10,520,031	$11,963	$8,535,405	$39,699	$8,587,068	$11,565	$7,977,014	$39,699	$8,028,279	-$558,789
5	$15,160	$10,840,594	$44,949	$10,900,703	$11,181	$8,270,238	$34,292	$8,315,710	$10,809	$7,729,194	$34,292	$7,774,294	-$541,415
6	$15,160	$10,528,920	$43,278	$10,587,357	$10,449	$7,506,974	$30,856	$7,548,280	$10,102	$7,015,864	$30,856	$7,056,822	-$491,458
7	$15,160	$10,793,458	$50,305	$10,858,922	$9,766	$7,192,137	$33,520	$7,235,423	$9,441	$6,721,623	$33,520	$6,764,584	-$470,838
8	$15,160	$10,560,311	$43,278	$10,618,748	$9,127	$6,576,431	$26,951	$6,612,509	$8,823	$6,146,197	$26,951	$6,181,971	-$430,537

Table 1: Cost Savings of the Extension Rule by Year and Provision (2018 Dollars)

Year	Undiscounted Cost by Year				Discounted Costs - Baseline				Discounted Costs - Delay				Difference
	Engineering Controls and Work Practices	Ancillary Provisions	Respir-ators	Total	Engineer-ing Controls and Work Practices	Ancillary Provisions	Respir-ators	Total	Engineer-ing Controls and Work Practices	Ancillary Provisions	Respir-ators	Total	Total
9	$15,160	$10,772,025	$44,949	$10,832,134	$8,530	$6,269,417	$26,161	$6,304,107	$8,246	$5,859,268	$26,161	$5,893,675	-$410,432
10	$15,160	$10,574,631	$48,633	$10,638,424	$7,972	$5,751,898	$26,453	$5,786,323	$7,706	$5,375,606	$26,453	$5,409,766	-$376,558
Total	**$199,102**	**$117,101,329**	**$495,653**	**$117,796,085**	**$156,064**	**$90,618,687**	**$381,041**	**$91,155,792**	**$150,873**	**$84,690,362**	**$381,041**	**$85,222,275**	**-$5,933,517**
Annualized Total (7%)	**—**	**—**	**—**	**—**	**$22,220**	**$12,902,062**	**$54,252**	**$10,686,240**	**$21,481**	**$12,058,002**	**$54,252**	**$12,133,735**	**-$844,799**

Source: US DOL, OSHA, Directorate of Standards and Guidance, Office of Regulatory Analysis

Note: Figures in rows may not add to totals due to rounding.

Table 2: Summary of Cost Savings of the Extension Rule by Year and Detailed Provision (2018 Dollars)

Provision	Delay Years	Baseline Costs		Delay Costs		Cost Savings Due to Delay	
		3%	7%	3%	7%	3%	7%
Respirators	0	$51,539	$54,252	$51,539	$54,252	$0	$0
Engineering Controls and Work Practices	0.5	$20,873	$22,220	$20,567	$21,481	-$306	-$739
Rule Familiari-zation	1	$0	$0	$0	$0	$0	$0
Exposure Assessment	1	$5,182,213	$5,417,362	$5,031,275	$5,062,955	-$150,938	-$354,407
Regulated Areas	1	$281,930	$293,253	$273,718	$274,068	-$8,212	-$19,185
Beryllium Work Areas	1	$26,757	$32,497	$25,978	$30,371	-$779	-$2,126
Medical Surveillance	1	$1,531,280	$1,671,163	$1,486,680	$1,561,835	-$44,600	-$109,328
Medical Removal	1	$435,360	$496,139	$422,680	$463,681	-$12,680	-$32,458
Written Exposure Control Plan	1	$236,317	$253,173	$229,434	$236,610	-$6,883	-$16,563
Protective Work Clothing & Equipment	1	$170,515	$177,137	$165,549	$165,549	-$4,966	-$11,588
Hygiene Areas and Practices - Change Rooms	1	$1,379,760	$1,436,745	$1,339,573	$1,342,752	-$40,187	-$93,993
Hygiene Areas and Practices - Changing Labor Time	1	$296,379	$307,889	$287,747	$287,747	-$8,632	-$20,142
Hygiene Areas and Practices - Head Coverings	1	$17,191	$17,859	$16,690	$16,690	-$501	-$1,168
Housekeeping	1	$1,813,684	$1,922,243	$1,760,858	$1,796,489	-$52,826	-$125,754
Training	1	$839,796	$876,602	$815,336	$819,255	-$24,460	-$57,348
Total	—	**$12,283,593**	**$12,978,534**	**$11,927,622**	**$12,133,735**	**-$355,972**	**-$844,799**

Source: US DOL, OSHA, Directorate of Standards and Guidance, Office of Regulatory Analysis
Note: Figures in rows may not add to totals due to rounding.

Table 3: Summary of Cost Savings of the Extension Rule by Year, Provision, and Industry (2018 Dollars)

Sector	Abrasive Blasting - Construction		Abrasive Blasting - Shipyards	Welding - Shipyards	Construction Subtotal	Maritime Subtotal	Total, All Industries
NAICS	238320	238990	336611a	336611b			
Industry	Painting and Wall Covering Contractors	All Other Specialty Trade Contractors	Ship Building and Repairing	Ship Building and Repairing			
3% Discount Rate							
Respirators	$0	$0	$0	$0	$0	$0	$0
Engineering Controls and Work Practices	$0	$0	$0	-$306	$0	-$306	-$306
Rule Familiarization	$0	$0	$0	$0	$0	$0	$0
Exposure Assessment	-$57,327	-$53,120	-$40,234	-$257	-$110,447	-$40,491	-$150,938
Regulated Areas	-$139	-$129	-$7,900	-$43	-$269	-$7,943	-$8,212
Beryllium Work Areas	-$302	-$280	-$191	-$7	-$581	-$198	-$779
Medical Surveillance	-$16,868	-$15,630	-$11,838	-$264	-$32,498	-$12,103	-$44,600
Medical Removal	-$4,816	-$4,463	-$3,380	-$21	-$9,279	-$3,401	-$12,680
Written Exposure Control Plan	-$2,610	-$2,419	-$1,791	-$63	-$5,029	-$1,854	-$6,883
Protective Work Clothing & Equipment	-$1,873	-$1,736	-$1,312	-$45	-$3,609	-$1,358	-$4,966
Hygiene Areas and Practices - Change Rooms	-$15,662	-$14,512	-$9,900	-$114	-$30,174	-$10,013	-$40,187
Hygiene Areas and Practices - Changing Labor Time	-$3,279	-$3,039	-$2,302	-$12	-$6,318	-$2,314	-$8,632
Hygiene Areas and Practices - Head Coverings	-$190	-$176	-$134	-$1	-$366	-$134	-$501
Housekeeping	-$19,914	-$18,453	-$13,977	-$482	-$38,367	-$14,459	-$52,826
Training	-$9,221	-$8,544	-$6,472	-$223	-$17,765	-$6,695	-$24,460
Total (3%)	**-$132,202**	**-$122,499**	**-$99,430**	**-$1,840**	**-$254,701**	**-$101,270**	**-$355,972**
7% Discount Rate							
Respirators	$0	$0	$0	$0	$0	$0	$0
Engineering Controls and Work Practices	$0	$0	$0	-$739	$0	-$739	-$739
Rule Familiarization	$0	$0	$0	$0	$0	$0	$0
Exposure Assessment	-$134,605	-$124,726	-$94,470	-$606	-$259,331	-$95,076	-$354,407
Regulated Areas	-$325	-$302	-$18,458	-$100	-$627	-$18,558	-$19,185
Beryllium Work Areas	-$823	-$763	-$520	-$20	-$1,586	-$540	-$2,126

Medical Surveillance	-$41,353	-$38,318	-$29,023	-$635	-$79,671	-$29,658	-$109,328
Medical Removal	-$12,328	-$11,423	-$8,652	-$54	-$23,751	-$8,706	-$32,458
Written Exposure Control Plan	-$6,286	-$5,824	-$4,301	-$152	-$12,110	-$4,453	-$16,563
Protective Work Clothing & Equipment	-$4,371	-$4,050	-$3,062	-$106	-$8,421	-$3,168	-$11,588
Hygiene Areas and Practices - Change Rooms	-$36,630	-$33,942	-$23,154	-$266	-$70,572	-$23,420	-$93,993
Hygiene Areas and Practices - Changing Labor Time	-$7,652	-$7,090	-$5,371	-$29	-$14,743	-$5,400	-$20,142
Hygiene Areas and Practices - Head Coverings	-$444	-$411	-$312	-$2	-$855	-$313	-$1,168
Housekeeping	-$47,407	-$43,927	-$33,272	-$1,148	-$91,334	-$34,420	-$125,754
Training	-$21,619	-$20,032	-$15,173	-$524	-$41,651	-$15,697	-$57,348
Total (7%)	**-$313,843**	**-$290,809**	**-$235,767**	**-$4,380**	**-$604,652**	**-$240,148**	**-$844,799**

Source: US DOL, OSHA, Directorate of Standards and Guidance, Office of Regulatory Analysis

Note: Figures in rows may not add to totals due to rounding.

BILLING CODE 4510–26–C

V. OMB Review Under the Paperwork Reduction Act of 1995

The current beryllium standards for occupational exposure to beryllium—general industry (29 CFR 1910.1024), construction (29 CFR 1926.1124), and shipyard (29 CFR 1915.1024)—contain collection of information (paperwork) requirements that have been approved by the Office of Management and Budget (OMB) under the Paperwork Reduction Act of 1995 (PRA), and approved under OMB Control number 1218–0267. The PRA defines ''collection of information'' to mean ''the obtaining, causing to be obtained, soliciting, or requiring the disclosure to third parties or the public, of facts or opinions by or for an agency, regardless of form or format'' (44 U.S.C. 3502(3)(A)). Under the PRA, a Federal agency cannot conduct or sponsor a collection of information unless OMB approves it, and the agency displays a currently valid OMB control number (44 U.S.C. 3507). Also, notwithstanding any other provision of law, no employer shall be subject to penalty for failing to comply with a collection of information if the collection of information does not display a currently valid OMB control number (44 U.S.C. 3512).

In OSHA's June 27, 2017 proposed rule, OSHA proposed to revoke the ancillary provisions of the beryllium standards, and their collection of information requirements, in both the construction and shipyards sectors, while retaining the new lower PEL of 0.2 μg/m³ and STEL of 2.0 μg/m³ for those sectors (82 FR 29182). In this final rule, OSHA has decided not to adopt the proposal to revoke the ancillary requirements in the construction and shipyard standards. Instead, OSHA is extending the compliance dates for the ancillary provisions of the construction and shipyard standards. The final rule does not change the information collections already approved by the OMB under OMB Control Number 1218–0267.

VI. Federalism

OSHA reviewed this final rule in accordance with the Executive Order on Federalism (E.O. 13132, 64 FR 43255 (Aug. 10, 1999)), which requires that Federal agencies, to the extent possible, refrain from limiting state policy options, consult with states prior to taking any actions that would restrict state policy options, and take such actions only when clear constitutional authority exists and the problem is national in scope. E.O. 13132 provides for preemption of state law only with the express consent of Congress. Federal agencies must limit any such preemption to the extent possible.

Under Section 18 of the OSH Act (29 U.S.C. 651 *et seq.*), Congress expressly provides that states and U.S. territories may adopt, with Federal approval, a plan for the development and enforcement of occupational safety and health standards. OSHA refers to such states and territories as ''State Plan States.'' Occupational safety and health standards developed by State Plan States must be at least as effective in providing safe and healthful employment and places of employment as the Federal standards (29 U.S.C. 667). Subject to these requirements, State Plan States are free to develop and enforce under state law their own requirements for safety and health standards.

OSHA previously concluded from its analysis that promulgation of the beryllium standard complies with E.O. 13132 (82 FR at 2633). In states without an OSHA-approved State Plan, this final rule limits state policy options in the same manner as every standard promulgated by OSHA. For State Plan States, Section 18 of the OSH Act, as noted in the previous paragraph, permits State Plan States to develop and enforce their own beryllium standards provided these requirements are at least as effective in providing safe and healthful employment and places of employment as the requirements specified in this final rule.

VII. State Plan States

When Federal OSHA promulgates a new standard or a more stringent amendment to an existing standard, State Plans must amend their standards to reflect the new standard or amendment, or show OSHA why such action is unnecessary, *e.g.,* because an existing state standard covering this area is ''at least as effective'' as the new Federal standard or amendment (29 CFR

1953.5(a)). The state standard must be at least as effective as the final Federal rule. State Plans must adopt the Federal standard or complete their own standard within six months of the promulgation date of the final Federal rule. When OSHA promulgates a new standard or amendment that does not impose additional or more stringent requirements than an existing standard, State Plans do not have to amend their standards, although OSHA may encourage them to do so. The 21 states and 1 U.S. territory with OSHA-approved occupational safety and health plans covering the private sector and state and local governments are: Alaska, Arizona, California, Hawaii, Indiana, Iowa, Kentucky, Maryland, Michigan, Minnesota, Nevada, New Mexico, North Carolina, Oregon, Puerto Rico, South Carolina, Tennessee, Utah, Vermont, Virginia, Washington, and Wyoming. Connecticut, Illinois, Maine, New Jersey, New York, and the Virgin Islands have OSHA-approved State Plans that apply to state and local government employees only.

The new amendments to OSHA's beryllium rule do not impose any new requirements on employers. Accordingly, State Plans do not have to amend their standards to extend the compliance dates for their beryllium rules, but they may do so within the limits of this final rule.

VIII. Unfunded Mandates Reform Act

When OSHA issued the 2017 final rule establishing standards for occupational exposure to beryllium, it reviewed the rule according to the Unfunded Mandates Reform Act of 1995 (UMRA) (2 U.S.C. 1501 *et seq.*) and E.O. 13132 (64 FR 43255 (Aug. 10, 1999)). OSHA concluded that the 2017 final rule did not meet the definition of a ''Federal intergovernmental mandate'' under the UMRA because OSHA standards do not apply to state or local governments except in states that voluntarily adopt State Plans. OSHA further noted that the rule did not impose costs of over $100 million per year on the private sector (82 FR at 2634).

As discussed above in Section IV of this preamble, OSHA has determined that the extension of the compliance dates in this final rule does not impose any costs on private-sector employers beyond those costs already identified in the 2017 final rule for beryllium. Because OSHA reviewed the total costs of the 2017 beryllium rule under UMRA, no further review of those costs is necessary. Therefore, for purposes of UMRA, OSHA certifies that this final rule does not mandate that state, local, or tribal governments adopt new, unfunded regulatory obligations of, or increase expenditures by the private sector by, more than $100 million in any year.

IX. Environmental Impacts

OSHA has reviewed this final beryllium rule according to the National Environmental Policy Act of 1969 (NEPA) (42 U.S.C. 4321 *et seq.*), the regulations of the Council on Environmental Quality (40 CFR part 1500), and the Department of Labor's NEPA procedures (29 CFR part 11). OSHA has made a determination that this final rule would have no significant impact on air, water, or soil quality; plant or animal life; or the use of land or aspects of the external environment.

X. Consultation and Coordination With Indian Tribal Governments

OSHA reviewed this final rule in accordance with E.O. 13175 (65 FR 67249) and determined that it does not have ''tribal implications'' as defined in that order. This rule does not have substantial direct effects on one or more Indian tribes, on the relationship between the Federal government and Indian tribes, or on the distribution of power and responsibilities between the Federal government and Indian tribes.

XI. Health and Risk

As part of the 2017 final rule, OSHA concluded that employees exposed to beryllium and beryllium compounds at the preceding PELs were at significant risk of material impairment of health, specifically CBD and lung cancer. OSHA also reviewed the exposure data for workers exposed to beryllium in abrasive blasting in construction and shipyards and welding in shipyards, and determined, based on the exposure levels observed, that there is a significant risk to those workers of CBD and lung cancer (82 FR at 29183). In the 2017 construction and shipyards NPRM, OSHA described its previous findings and invited further comment and data ''on the risks of sensitization, CBD, and lung cancer among workers involved in abrasive blasting and welding operations in shipyards and construction'' (82 FR at 29221). After reviewing the comments and information received in response to this invitation, OSHA reaffirms its finding that the best available evidence indicates that there is a significant risk of material impairment of health for workers exposed to beryllium in construction and shipyards.[9]

Some commenters, including the Abrasive Blasting Manufacturers Alliance (ABMA), the Construction Industry Safety Coalition (CISC), Materion Brush Inc. (Materion), and the National Association of Home Builders, argued that OSHA failed to show significant risk for lung cancer or CBD in construction and shipyards (Document ID 2142, pp. 3, 12–14; 2125, p. 23; 2145, pp. 1, 27; 2128, pp. 3–4). For example, CISC pointed out that OSHA's risk assessment for the 2017 final rule is based on studies from general industry workplaces and complained of a ''lack of data suggesting any cases of CBD or other associated disease outcomes in construction'' (Document ID 2125, pp. 12–13, 24). ABMA also asserted, based on reasoning similar to CISC's, that there is no evidence of health effects from beryllium exposure in construction and shipyards (Document ID 2142, Comments, pp. 12–13). A review commissioned and submitted by ABMA found that there are no epidemiological studies establishing causation between beryllium exposure as a result of abrasive blasting and CBD (Document ID 2142, Attachment 2, p. 7). Materion noted that OSHA's risk analysis is based on studies that do not examine the prevalence of disease specifically among workers exposed to abrasive blast media in construction and shipyards, while acknowledging that abrasive blasting can lead to beryllium exposures over the new action level of 0.1 ug/m^3 (Document ID 2145, Comments, p. 6). All of these comments are substantively similar to previous comments on OSHA's 2015 NPRM.

For example, ABMA previously asserted that their members are unaware of any occurrence of beryllium sensitization, CBD, or lung cancer due to beryllium exposure among their employees or their customers' employees (Document ID 1673, p. 9). OSHA addressed such comments in the preamble to the 2017 final rule, finding that ABMA had not presented the agency with any studies or rigorous scientific evidence to support their statements (82 FR at 2641–42). OSHA noted in the January 9, 2017, final rule that such statements were not compelling evidence, especially considering that no surveillance programs were in place to detect beryllium sensitization or CBD among workers exposed to beryllium among ABMA's members (82 FR at 2642; see

[9] Many commenters also expressed concern about the provisions of the standards related to dermal contact with beryllium. While OSHA does not address these comments in this final rule, the forthcoming rulemaking will propose changes related to dermal contact with beryllium.

also 82 FR at 29221). ABMA's comments submitted in response to the 2017 NPRM complain that OSHA often considers anecdotal evidence from employees and is shifting the burden to the regulated community to show the absence of risk (Document ID 2142, Comments, p. 13). Similarly, CISC complains that OSHA's approach did not include data examining the prevalence of CBD or other beryllium-related disease endpoints in the construction industry before in determining that construction and shipyard employees also faced a significant risk of material impairment of health (Document ID 2125, pp. 13–14).

As CISC acknowledged, however, ''OSHA does not need to perform an industry-by-industry assessment of significant risk when promulgating health standards'' (Document ID 2125, p. 14). OSHA's 2017 final rule risk assessment showed that there is a significant risk of beryllium sensitization and CBD for workers exposed to beryllium at exposure levels of 0.1 ug/m^3 and above. ABMA, CISC, and others attempt to rebut this finding by claiming a lack of disease in their industries without providing any evidence of testing for these conditions among construction and shipyards workers.[10] Information on testing rates in an industry is necessary before any conclusions about disease prevalence can be made. This is particularly so in operations like abrasive blasting, where treating physicians may be unaware of the potential for beryllium exposure. Medical professionals would likely not order a Beryllium Lymphocyte Proliferation Test (BeLPT) unless they know a worker has been exposed to beryllium, and without such a test, CBD is often misdiagnosed. (Document ID 2091; 82 FR 2499, 2705). As the National Employment Law Project (NELP) commented, OSHA cannot ''withhold or revoke feasible protections from comparably at-risk workers just because their toxic exposures occur in different industries.'' (Document ID 2106, p. 5). On this record, OSHA has no reason to believe that airborne exposure to beryllium impacts construction and shipyard employees differently from general industry employees and reaffirms its previous finding: That reports from employers in these industries who have not provided their workers with medical surveillance specific to beryllium-related health effects do not constitute evidence against OSHA's determination of significant risk at exposure levels of 0.1 ug/m^3 and above.

Some commenters further argued that OSHA should address possible variability in risk depending on the specific chemical compound or physical form (*e.g.,* particle size) of beryllium. CISC commented that OSHA did not adequately account for ''differences in toxicity with the variety of forms of beryllium'' (Document ID 2125, pp. 14–18). ABMA and Materion observed that OSHA's 2017 health and risk analysis relied on studies of exposure to beryllium alloys or processed beryllium, which they believe to be irrelevant to the construction industry (Document ID 2142, Comments, pp. 12, 17; 2145, Comments, p. 6). Citing Deubner et al.'s 2001 study of 75 workers exposed in a beryllium mining and extraction facility who were primarily exposed to beryllium ore and salts (Document ID 1543), Materion stated that ''a case of CBD has never been identified in any patient that has been linked only to exposures to natural beryllium containing materials associated with the construction industry'' (Document ID 2145, Comments, p. 6).

OSHA also reviewed the Deubner et al. study that Materion cited and discussed it in the 2017 final rule.[11] Because there was no sensitization or CBD detected among those whose only beryllium exposure came from working with bertrandite ore, Deubner et al. concluded that beryllium ore and salts may pose less of a hazard than beryllium metal and beryllium hydroxide. OSHA noted in the 2017 final rule preamble that these results are consistent with some of the literature on animal studies examining solubility and particle size (82 FR at 2502). However, the Duebner et al. study population of 75 workers is too small to demonstrate that beryllium ore and salts pose no hazard of sensitization and CBD. OSHA acknowledged some uncertainty regarding possible differences in risk depending on the chemical or physical form of beryllium (82 FR at 2545), but determined that there is insufficient information to support a quantitative risk analysis differentiating between chemical and physical forms of beryllium (82 FR at 2529). Comments submitted on the 2017 construction and shipyards NPRM did not provide any additional data or information that OSHA could use to evaluate risk of sensitization or CBD associated with various chemical or physical forms of beryllium. Therefore, OSHA reaffirms its determination of significant risk of material impairments of health at airborne beryllium exposure levels of 0.1 ug/m^3 and above, regardless of the chemical or physical form of the beryllium.

OSHA also acknowledged uncertainty in its risk estimates for lung cancer in the 2017 final rule, stating that the lung cancer risks should be regarded as less certain than its risk estimates for CBD and sensitization (82 FR at 2552). OSHA continues to acknowledge that the solubility of beryllium may affect the risk of lung cancer it poses to exposed workers. Materion provided extensive commentary suggesting that OSHA's 2017 determination that beryllium exposure can cause lung cancer should not apply to beryllium in insoluble forms (Document ID 2145, pp. 12–20). Materion supplemented their comments with an analysis they commissioned to evaluate OSHA's 2017 lung cancer risk assessment (Crump and Proctor, Document ID 2145, Attachment 5); a publication that updated a previous lung cancer study by Boffetta et al. (Document ID 2145, Attachment 3); and a group of animal testing results that Materion cited as evidence that exposure to beryllium metal is unlikely to cause cancer (Document ID 2145, Comments, pp. 18–20; Attachments 8–18). However, the agency determined in 2017 that the epidemiological literature on beryllium sensitization and CBD clearly shows sufficient occurrence of sensitization and CBD to be considered significant within the meaning of the OSH Act (82 FR at 2545). Uncertainty with respect to the lung cancer risk attributable to beryllium exposure in construction and shipyards does not undermine OSHA's finding of significant risk wherever there is beryllium exposure at the action level or above, which rests upon strong evidence that such exposure can cause CBD.

In summary, the comments submitted by ABMA, CISC, Materion, and others regarding OSHA's 2017 risk assessment merely recapitulate arguments that were previously presented in response to the 2015 NPRM, and which OSHA addressed in the 2017 final rule. OSHA has reviewed the comments, analyses, and studies submitted to the record, and finds no information that would cause the agency to reconsider its significant risk determination for airborne beryllium exposure at and above the

[10] Furthermore, the literature review submitted by ABMA (SOMA) did not identify any studies examining sensitization and CBD in these sectors (Document ID 2142, Attachment 2, pp. 6–7).

[11] Of the 75 workers surveyed for sensitization with the BeLPT, three were identified as sensitized by an abnormal BeLPT result. One of those found to be sensitized was diagnosed with CBD. A follow-up study by Stefaniak et al. (2008) found that beryllium was present at the mill in three forms: Mineral, poorly crystalline beryllium oxide, and beryllium hydroxide (Document ID 1543).

action level in construction and shipyards.

OSHA maintains its conclusion from the 2017 final rule that employees in construction and shipyards are exposed to beryllium at levels above the new action level and PEL, primarily from abrasive blasting activities, and that employees exposed to those levels are at significant risk of developing adverse health effects (82 FR at 2637).

XII. Summary and Explanation of the Final Rule

This section of the preamble explains the final changes that OSHA is making to the beryllium standards for construction and shipyards, as well as the agency's rationales for making the changes and for not adopting its proposal to revoke all ancillary provisions from the beryllium standards for construction and shipyards.

A. Introduction

The 2017 final rule promulgated three standards designed to protect workers from the serious health effects caused by occupational exposure to beryllium and beryllium compounds (see 82 FR 2470 (Jan. 9, 2017)). The three standards, which cover general industry (29 CFR 1910.1024), construction (29 CFR 1926.1124), and shipyards (29 CFR 1915.1024), contain a comprehensive set of protections against beryllium exposure, consisting of the exposure limits in paragraph (c) and a number of ancillary provisions, typical of OSHA health standards, in paragraphs (d) through (n) (see 82 FR at 2476). The ancillary provisions of the construction and shipyards standards encompass requirements for exposure assessment, competent person (construction) or regulated areas (shipyards), methods of compliance, respiratory protection, personal protective clothing and equipment, hygiene, housekeeping, medical surveillance and medical removal, communication of hazards, and recordkeeping (29 CFR 1915.1024(d)–(n); 29 CFR 1926.1124(d)–(n)).

Since publication of the 2017 final rule, OSHA has undertaken several additional rulemaking efforts affecting the beryllium standards. On June 27, 2017, OSHA proposed revoking the ancillary provisions for the construction and shipyards standards while retaining the new, lower PEL of 0.2 μg/m^3 and STEL of 2.0 μg/m^3 for those sectors (82 FR 29182). Subsequently, on May 7, 2018, OSHA issued a DFR adopting a number of clarifying amendments to address the application of the beryllium standard for general industry to materials containing trace amounts of beryllium (83 FR 19936). The DFR amended the text of the general industry standard to clarify certain terms in the standard, including the definition of beryllium work area, the definition of emergency, and the meaning of the terms dermal contact and beryllium contamination. The DFR also clarified provisions for disposal and recycling and provisions that the agency intended to apply only where skin can be exposed to materials containing at least 0.1% beryllium by weight. OSHA did not receive significant adverse comment in response to the DFR, and therefore the rule became effective on July 6, 2018 (see 83 FR 31045 (July 3, 2018)).

On June 1, 2018, OSHA published a proposal to extend the compliance date for certain ancillary requirements of the general industry beryllium standard, from March 12, 2018 to December 12, 2018 (83 FR 25536). OSHA reasoned that: (1) It planned to propose modifications to ancillary provisions of the beryllium general industry standard in response to stakeholder questions and concerns; (2) it would be undesirable for both the agency and the regulated community to begin enforcement of the ancillary provisions of the standard that would be affected by the upcoming rulemaking; (3) enforcing compliance with the relevant ancillary requirements, as currently written, before publishing the agreed-upon proposal, would likely result in employers taking unnecessary measures to comply with provisions that OSHA intended to clarify; and (4) the proposed compliance date extension would give OSHA time to prepare and publish the planned substantive general industry NPRM to amend the standard before employers were required to comply with the affected provisions of the rule. OSHA adopted the extension of the compliance dates, as proposed, on August 9, 2018 (83 FR 39351).

Finally, on December 11, 2018, OSHA published a proposal to modify several of the general industry beryllium standard's definitions, along with the provisions for methods of compliance, personal protective clothing and equipment, hygiene areas and practices, housekeeping, medical surveillance, communication of hazards, and recordkeeping (83 FR 63746). OSHA proposed the modifications, in part, to provide clarification and simplify or improve compliance. The agency is working to finalize the proposal at this time.

B. OSHA's Decision Not To Revoke All Ancillary Provisions

As mentioned above, paragraphs (d) through (n) of the construction and shipyards standards for beryllium contain the ancillary provisions, which augment the exposure limits in paragraph (c). OSHA's 2017 NPRM proposed revoking all ancillary provisions for the construction and shipyards standards while retaining the new PEL of 0.2 μg/m^3 and the STEL of 2.0 μg/m^3 for those sectors (82 FR 29182). The primary rationale behind the proposal to revoke these provisions was that other OSHA standards might already require equivalent protections. In the 2017 NPRM, OSHA pointed to a number of OSHA standards that already apply to the primary operations involving beryllium exposure in construction and shipyards, which are abrasive blasting in construction and abrasive blasting and welding in shipyards (82 FR at 29183). These standards included the ventilation standard (29 CFR 1926.57) and the mechanical paint removers standard (29 CFR 1915.34), among others. OSHA requested comment on whether standards consisting only of the new, lower PEL and STEL would provide adequate protection to construction and shipyards workers, considering the other standards that apply. The agency also requested comment on whether OSHA should retain any or all of the ancillary provisions and, more particularly, on whether OSHA should retain the medical surveillance provisions (82 FR at 29183).

Some commenters agreed with OSHA's primary rationale for proposing to revoke all ancillary provisions in the construction and shipyards standards (see, *e.g.,* Document ID 2120; 2122; 2142), while others disagreed with that rationale (see, *e.g.,* Document ID 2121; 2124; 2129; 2132; 2133; 2134; 2140). For example, the U.S. Small Business Administration, Office of Advocacy (SBA) commented that ''employees performing abrasive blasting and welding in these sectors are already protected by OSHA standards and industry practices that provide for ventilation, personal protective equipment, and respiratory protection'' (Document ID 2120, p. 6). On the other hand, Public Citizen's Health Research Group (Public Citizen) commented that ''it is simply untrue . . . that all of the ancillary beryllium provisions overlap with existing OSHA regulations and that workers therefore will achieve no additional protections from the dangers of beryllium with the implementation of the ancillary provisions of the rule'' (Document ID 2134, p. 2).

Having carefully reviewed the comments and evidence in the record, OSHA has determined that beryllium construction and shipyards standards

consisting only of the PEL and STEL would not be sufficiently protective. Other OSHA standards do contain some requirements that overlap with, or duplicate, the requirements of the beryllium standards for construction and shipyards. However, for most ancillary provisions, there is only partial overlap, and for the remainder, there is no overlap at all. This conclusion refutes OSHA's primary rationale for issuing the proposal. Thus, OSHA has determined not to adopt its proposal to remove all ancillary provisions from the construction and beryllium standards.

In its analysis below, OSHA discusses only whether other OSHA standards overlap with each of the beryllium standards' ancillary provisions, and whether OSHA should revoke those provisions on the basis of overlap with existing standards. Other issues, such as whether discrete requirements in the standards are necessary, will be addressed in the forthcoming proposal. OSHA takes this approach because it recognizes that there is not complete overlap between the standards' ancillary provisions and other OSHA standards, and that therefore it cannot issue a final rule revoking all the construction and shipyard ancillary provisions on that basis.

OSHA has also decided not to revoke, in this final rule, discrete portions of ancillary provisions that overlap with other OSHA standards, while retaining parts of other provisions, to ensure that stakeholders have a full opportunity to comment on this action. This is particularly important here, where several commenters emphasized that the ancillary provisions of the beryllium standards are interrelated and cannot be practically and effectively implemented in isolation (see Document ID 2129, p. 8; 3130, p. 2; 2134, p. 3; 2140, p. 4). In addition, in the forthcoming proposal, OSHA intends to propose a number of changes to specific ancillary provisions for issues not addressed by the June 27, 2017 NPRM. For example, OSHA will propose changes to the construction and shipyard beryllium standards that reflect changes OSHA has proposed to the general industry standard (83 FR 63746). These changes may themselves impact conclusions about the necessity of a particular ancillary provision. OSHA therefore has decided to proceed with a new proposal, which will ensure that the record is fully developed.

The following discussion addresses each ancillary provision, along with the comments in the record regarding overlap or duplication with other OSHA requirements.[12]

Exposure Assessment, Paragraph (d)

Paragraph (d) of the beryllium standards for construction and shipyards (29 CFR 1926.1124(d) and 1915.1024(d)) requires employers to assess the airborne beryllium exposure of each employee using either a scheduled monitoring approach or a performance option. Reassessment is required when certain changes in the workplace occur. The provision establishes specific methods of sample analysis and requires employers to both provide affected employees the opportunity to observe the exposure monitoring and notify them of the assessment results. In the preamble to the 2017 final rule, OSHA found that this approach to exposure assessment was a ''well-recognized and accepted risk management tool'' and was ''necessary and protective'' for beryllium-exposed workers (82 FR at 2619, 2651).

All the commenters who specifically addressed the proposed removal of paragraph (d) opposed it (*e.g.,* Document ID 2109; 2118, p. 1; 2119, p. 2; 2129, p. 5; 2130, p. 2; 2134, p. 2; 2135, pp. 3–4; 2140, p. 7). For example, members of Congress noted that the requirement to perform exposure assessments for beryllium is not contained in any other OSHA standard. Absent paragraph (d), they argued, there would be no independent obligation to monitor employees' beryllium exposure at construction or shipyard workplaces (Document ID 2135, p. 4). Public Citizen echoed this concern, noting that, without the beryllium standards' ancillary provisions, employers ''would not be required, *by any regulation,* to follow a prescribed schedule for measurement of airborne beryllium [and] notify employees and maintain written records of the results of such measurements . . .'' (Document ID 2134, p. 2). Similarly, the Institute for Policy Integrity at NYU School of Law stated that, given OSHA's estimate of a 0% baseline compliance rate for the exposure assessment requirement, employers in the construction and shipyard industries will not conduct exposure assessments for beryllium absent paragraph (d) (Document ID 2119, p. 2). USW illustrated this point, stating that the shipyard employer that employs its members as abrasive blasters ''does not have a system in place to monitor for exposure to beryllium in the air'' (Document ID 2124, p. 2).

As indicated by the comments, no other standards duplicate the specific requirements in paragraph (d), such as the requirements to perform assessments at specified intervals and when there are changes in the workplace, along with the requirement for employee notification of results. This is true despite the fact that employers must currently perform some assessment of exposure to comply with the standards' PEL and STEL (which, again, OSHA is currently enforcing). The conclusion that there is no overlap with respect to paragraph (d) supports OSHA's determination not to revoke the standard's ancillary provisions in this final rule.

Regulated Areas (Shipyards) and Competent Person (Construction), Paragraph (e)

Paragraph (e) of the beryllium standard for shipyards (29 CFR 1915.1024(e)) requires employers to establish, maintain, demarcate, and limit access to ''regulated areas,'' which are demarcated areas where airborne beryllium exposure levels are above the PEL or STEL. Employees who enter regulated areas must use respiratory protection and PPE. Paragraph (e) of the beryllium standard for construction (29 CFR 1926.1124(e)), on the other hand, requires employers to designate a ''competent person'' where airborne exposure to beryllium exceeds the PEL or STEL. The competent person must make frequent and regular inspections of job sites, materials, and equipment, and perform other duties to ensure the proper implementation of the standard and protection of employees. OSHA determined in the 2017 final rule that paragraph (e) is necessary, among other reasons, to limit employee access to areas of the workplace with high levels of beryllium exposure and to ensure that employees who access such areas are properly protected against beryllium exposure (82 FR at 2658–59).

In the 2017 NPRM, OSHA noted that the construction ventilation standard, 29 CFR 1926.57(f), requires certain measures that would limit exposure of workers (82 FR at 29221). Specifically, 29 CFR 1926.57(f)(7) requires that dust not be allowed to accumulate outside abrasive blasting enclosures and that spills be cleaned up promptly (Id.). Furthermore, 29 CFR 1926.57(f)(3) and (4) require ventilation and dust collection and removal systems in abrasive blasting operations (Id.). OSHA

[12] For a detailed, provision-by-provision explanation of the beryllium standards promulgated in the 2017 final rule, including information on compliance with the requirements of the standards, please see Section XVI, Summary and Explanation of the Standards, in the final rule (82 FR at 2635–2735).

stated that compliance with these measures during abrasive blasting should reduce the amount of beryllium-containing dust to be cleaned, thereby protecting workers who clean spent abrasive blasting media after operations are completed (Id.). Additionally, OSHA emphasized the requirement to train employees to recognize and avoid unsafe conditions, 29 CFR 1926.21 (Id.), as a means of helping minimize exposures of workers proximal to abrasive blasting operations.

For shipyards, OSHA placed emphasis on the mechanical paint removers standard (Id. at 29222), which requires, at 29 CFR 1915.34(c)(3)(iii), that employees other than blasters wear eye and respiratory protection when working in areas where there are unsafe concentrations of abrasive material and dusts. In addition, OSHA noted that OSHA's ventilation standard applies to shipyards and requires, at 29 CFR 1910.94(a)(4), that blast cleaning enclosures have sufficient ventilation, in part, to prevent leakage of dust outside the enclosure. Such leakage could create exposures for employees not involved in blasting operations (Id.). OSHA also stated that abrasive blasting sometimes occurs in confined spaces at shipyard workplaces, and noted that OSHA's shipyard standard regulating work in confined and enclosed spaces requires demarcation of, and limitation of employee access to, such spaces (Id. (discussing 29 CFR 1915.12)).

OSHA requested information on the prevalence of abrasive blasting in confined or enclosed spaces in shipyards, but did not receive responsive comments establishing how often abrasive blasting operations in shipyards fall within the scope of 29 CFR 1915.12. However, even if it is assumed that most abrasive blasting operations at shipyards occur in confined spaces, 29 CFR 1915.12 would not substitute for the protections provided by paragraph (e). This is because paragraph (e) of the beryllium standard applies to all affected shipyards employees, not just those working in confined spaces. Employees protected by paragraph (e) but not by the confined spaces standard include those engaged in abrasive blasting in non-confined spaces and other employees who work near blasting operations, such as clean-up helpers.

None of the comments that OSHA received provided a specific rationale or data that would support removing paragraph (e) from either standard, while multiple comments supported OSHA's determination in the 2017 final rule that the requirements of paragraph (e) are essential to the effectiveness of the construction and shipyards beryllium standards. For example, North America's Building Trades Unions (NABTU) commented that paragraph (e) of the construction industry beryllium standard is important because construction worksites, unlike fixed worksites, typically do not have a safety professional on-site, and that the designation of a competent person ensures that there is an agent of the employer on-site who has the knowledge and authority to recognize, evaluate, and correct beryllium hazards (Document ID 2129, p. 6). NABTU also stated that the competent person requirement helps ensure that the written exposure control plan is properly implemented at construction worksites, and noted that OSHA has included a similar competent person requirement in numerous other health standards applicable to the construction industry (Id.). USW also submitted a comment indicating that employers engaged in abrasive blasting operations in the shipyards industry may not have specific controls in place to protect helpers or other bystanders from exposure to beryllium during the operation (Document ID 2124, pp. 9–11).

After considering these comments, OSHA finds that other standards do not completely overlap the standards' regulated areas (shipyards) and competent person (construction) requirements. Particularly, the other applicable OSHA standards discussed above do not replicate the requirements in paragraph (e) that ensure that employee access to areas with reasonably expected airborne exposure to beryllium is limited and appropriately managed. This conclusion supports OSHA's determination not to revoke the standards' ancillary provisions in this final rule.

Methods of Compliance, Paragraph (f)

Paragraph (f) of the beryllium standards for construction and shipyards requires that employers implement methods for reducing employee exposure to beryllium through a written exposure control plan, engineering and work practice controls, and a prohibition on rotating employees to achieve compliance with the PEL. In the 2017 final rule, OSHA determined that written exposure control plans are instrumental for protection of workers because ''[r]equiring employers to articulate where exposures occur and how those exposures will be controlled will help to ensure that they have a complete understanding'' of how to comply with the standards (82 FR at 2668). OSHA also concluded that requiring primary reliance on engineering and work practice controls to control exposures is consistent with good industrial hygiene practice and with OSHA's traditional approach for health standards (82 FR at 2672).

In response to the NPRM, Public Citizen noted that, ''[s]hould OSHA rescind the ancillary provisions for construction and shipyard workers, employers in those industries would not be required, *by any regulation,* to . . . maintain a written plan to control beryllium exposures [or] institute engineering and work practice controls. . . .'' (Document ID 2134, p. 2). The AFL–CIO commented that, without paragraph (f), ''the rule would ignore the importance of the hierarchy of controls in addressing workplace chemical exposures'' (Document ID 2140, p. 8).

These comments and OSHA's review of the record indicate that other OSHA standards do not provide equivalent worker protections. In the absence of paragraph (f), employers would not be required to establish and implement a written exposure control plan specific to beryllium, and shipyards workers would not receive the benefits of the hierarchy of controls, as required by paragraph (f).[13] This conclusion supports OSHA's determination not to revoke the standard's ancillary provisions in this final rule.

Respiratory Protection, Paragraph (g)

Paragraph (g) in the beryllium standards for both construction and shipyards requires the provision and use of respiratory protection from exposures to beryllium: (1) During periods necessary to install or implement feasible engineering and work practice controls where airborne exposure exceeds, or can reasonably be expected to exceed, the TWA PEL or STEL (paragraph (g)(1)(i)); (2) during operations, including maintenance and repair activities and non-routine tasks, when engineering and work practice controls are not feasible and airborne exposure exceeds, or can reasonably be expected to exceed, the TWA PEL or STEL (paragraph (g)(1)(ii)); (3) during operations for which an employer has implemented all feasible engineering and work practice controls when such

[13] Note that under a PEL- and STEL-only beryllium standard, construction employers would be required to comply with the new beryllium exposure limits under 29 CFR 1926.55(b), which independently requires the hierarchy of controls. The shipyards air contaminants standard however, does not contain a comparable requirement to implement engineering and work practice controls (see 29 CFR 1915.1000).

controls are not sufficient to reduce airborne exposure to or below the TWA PEL or STEL (paragraph (g)(1)(iii)); (4) during emergencies (paragraph (g)(1)(iv)); and (5) when an employee who is eligible for medical removal under the standard chooses to remain in a job with airborne exposure at or above the action level (paragraph (g)(1)(v)). Paragraph (g) also provides that required respiratory protection must be selected and used in accordance with OSHA's general Respiratory Protection standard at 29 CFR 1910.134. Finally, paragraph (g) requires employers to provide powered air-purifying respirators (PAPR) when an employee entitled to a respirator under the beryllium standard requests one, as long as the PAPR provides adequate protection.

In the 2017 final rule, OSHA recognized that workers who perform open-air abrasive blasting using mineral grit (*i.e.,* coal slag) will routinely be exposed to levels above the PEL of 0.2 μg/m^3 (even after the installation of feasible engineering and work practice controls), and therefore, these workers will also be required to wear respiratory protection (82 FR at 2584). OSHA also found that requiring the provision and use of respiratory protection when an employee who is eligible for medical removal chooses to remain in a job with airborne exposure at or above the action level ''has the potential to delay or avoid the onset of CBD in sensitized individuals and to mitigate or retard the effects of CBD in employees who are in the early stages of CBD'' (82 FR at 2676). Finally, OSHA found that ''provision of PAPRs at the employee's request will provide employees necessary protection beyond that found in provisions of the Respiratory Protection standard, where provision of a PAPR for reasons of fit, comfort and reliability is at the employer's discretion'' (82 FR at 2676).

In the NPRM, OSHA relied on several of its standards requiring the provision and use of respirators to explain its proposal to revoke the ancillary provisions of the 2017 construction and shipyard rules (82 FR at 29221–22). First, OSHA relied on the construction ventilation standard, 29 CFR 1926.57, which requires workers performing abrasive blasting to wear extensive PPE, including respirators, under certain conditions, including where beryllium concentrations dispersed by blasting may exceed the PEL and the operator is not already physically separated from the nozzle and blast material (29 CFR 1926.57(f)(5)(ii)). Second, OSHA relied on the general industry respiratory protection standard, 29 CFR 1910.134, which applies to both construction and shipyards, because it requires employers to provide a respirator to each employee when necessary to protect the employee's health. Third, OSHA relied on the mechanical paint removers standard, 29 CFR 1915.34, which applies to abrasive blasting in shipyards, and ''requires respiratory protection and other appropriate personal protective equipment in abrasive blasting operations for both abrasive blasting operators and helpers working in the area'' (29 CFR 1915.34(c)(3)). Finally, OSHA relied on the standard covering confined and enclosed spaces in shipyard employment, which prohibits employees from entering a space whose atmosphere exceeds a PEL except for emergency rescue, or for a short duration for installation of ventilation equipment, provided that the atmosphere in the space is monitored continuously and respiratory protection and other necessary and appropriate PPE and clothing are provided (29 CFR 1915.12).

A number of commenters focused specifically on the degree of overlap between the construction and shipyards standards' respiratory protection requirements and the respiratory protection requirements in other OSHA standards. Some agreed with OSHA's preliminary determination that the respiratory protection provisions contained in paragraph (g) of the standards were unnecessary because the workers were adequately protected by other applicable standards. For example, the ABMA stated that OSHA's preliminary determination was ''absolutely correct'' (Document ID 2142, p. 9). In support of its statement, ABMA submitted a report prepared for it by Exponent (Document ID 2142, Attachment 1), which stated that the rules governing abrasive blasting currently in effect for both the construction and shipyards industries already require engineering and administrative controls and PPE, including an air supply respirator and a hood or blasting helmet (Document ID 2142, Attachment 1, pp. 5–6, 11). SBA similarly noted its ''understanding'' that employees performing abrasive blasting and welding in the construction and shipyard sectors are already protected by OSHA standards and industry practices that provide for ventilation, PPE, and respiratory protection (Document ID 2120, p. 6).

Other commenters objected to the proposed removal of paragraph (g) (see, *e.g.,* Document ID 2124; 2129; 2135; 2140). Some argued that existing respiratory protection requirements in other standards are not sufficient to protect all of the employees exposed to beryllium in construction and shipyards, especially employees who are exposed due to abrasive blasting. For example, NABTU commented that the ventilation standard ''does little, if anything, for [construction] workers other than the blasting operators'' (Document ID 2129, p. 9). Specifically, NABTU observed that the ventilation standard ''does not require respiratory protection for pot tenders, helpers, or bystanders, instead simply stating that dust-filter respirators 'may be used' for operations such as clean up, loading, or unloading'' (Document ID 2129, p. 9).

AFL–CIO echoed NABTU's concerns, commenting that the ventilation standard, 29 CFR 1926.57, and the mechanical paint removers standard, 29 CFR 1915.34, do not protect workers, such as pot tenders, cleanup workers, demolition workers, machinists, surveyors, maintenance and repair workers and other bystanders, who are performing other tasks in operations like abrasive blasting (Document ID 2140, pp. 3, 5). It argued that these workers are at serious risk from beryllium dust created by abrasive blasting operations, and, importantly, do not share the same baseline protections as abrasive blasters and welders (Document ID 2140, p. 3).

USW expressed similar concerns in its comments (Document ID 2124, pp. 2, 10–11). Its USW Local Union 8888 safety committee stated that it knows from on-the-job experience that, even though shipyard abrasive blasters are required to wear an airline respirator, others on the blasting crew in shipyards are not required to wear any type of respiratory protection (Document ID 2124, pp. 2, 11). In support, USW quoted the testimony of USW Local Union 8888 member Dennis Johnson, who testified at OSHA's March 2016 public hearing on the 2015 beryllium proposal that, in his experience in shipyards, ''only the blasters had the respirators'' (Document ID 2124, p. 10 (quoting Document ID 1756, Tr. 246–49)). USW noted that this issue is not confined to the shipyard industry; Mr. Johnson's experience is comparable to USW members' experience in construction operations (Document ID 2124, p. 11).

After considering the comments, OSHA concludes that there is partial, but not complete, overlap between other OSHA standards and paragraph (g) of the final construction and shipyards rules. It is true that paragraph (g) requires respiratory protection to be selected and used in accordance with OSHA's general respiratory protection standard, 29 CFR 1910.134, and that the general industry respiratory protection standard is independently applicable to

the construction and shipyards sectors (see 29 CFR 1926.103, 1915.154). However, other standards on which OSHA relied in the NPRM do not apply to all situations or tasks in which workers covered by the construction or shipyards beryllium standards might engage.

Moreover, the construction and shipyards standards contain requirements that go beyond the baseline requirements in other OSHA standards, including the general industry respiratory protection standard. Unlike the beryllium standards, none of the standards on which OSHA relied in the NPRM require respiratory protection for an employee who is eligible for medical removal under the standard but chooses to remain in a job with airborne exposure at or above the action level, or require employers to provide PAPRs when an employee entitled to a respirator under the beryllium standard requests one. Indeed, in the 2017 final rule, OSHA specifically recognized that the PAPR provision went beyond the baseline provisions of the respiratory protection standard (82 FR at 2678).

Therefore, other standards do not completely overlap the standards' respiratory protection requirements. This conclusion supports OSHA's determination not to revoke the standards' ancillary provisions in this final rule.

Personal Protective Clothing and Equipment, Paragraph (h)

Paragraph (h) requires employers to provide and ensure the use of PPE for employees exposed to beryllium, and also contains provisions pertaining to the removal, storage, cleaning, and replacement of the PPE. To comply with paragraph (h), employers are expected to choose the appropriate type of PPE for their employees based on the results of the employer's hazard assessment (82 FR at 2682). In the 2017 final rule, OSHA stated that the PPE requirements are intended to protect employees by preventing the accumulation of airborne beryllium on clothing, shoes, and equipment, which can result in additional inhalation exposure. The PPE requirements also protect employees in other work areas, as well as employees and other individuals outside the workplace, from exposures that could occur if contaminated clothing were to transfer beryllium to those areas (82 FR at 2678).

In the 2017 NPRM, OSHA identified several OSHA standards that require employees engaged in abrasive blasting operations (in construction and shipyards) and welding operations (in shipyards) to use PPE during their work (82 FR at 29197). OSHA stated that, in construction, 29 CFR 1926.57(f)(5)(v) requires abrasive blasting operators to wear full PPE, including respirators, gloves, safety shoes, and eye protection. Similarly, 29 CFR 1915.34(c)(3) requires full PPE for abrasive blaster operators performing mechanical paint removal in shipyards (82 FR at 29197). In addition, OSHA noted that gloves are required by 29 CFR 1915.57(a) to protect welders in shipyards, and that ''relevant PPE is required by the existing personal protective equipment standard (1926.95) and the existing hand and body protection standard (1915.157) to protect blasting helpers in construction and shipyards, respectively, from dermal exposure to beryllium dust'' (82 FR at 29197). Given the other standards' PPE requirements, OSHA preliminarily estimated that affected employees are required to be equipped with PPE 100 percent of the time when exposed to beryllium (82 FR at 29197).

In response to the 2017 proposal, NELP stated that the requirements in paragraph (h), which state ''clearly and specifically when and what type of PPE is required,'' do not exist in other OSHA standards and that, without paragraph (h) of the beryllium standards, ''employees will clearly not receive these protections'' (Document ID 2106, p. 6). Other commenters criticized OSHA's estimates regarding the existing use of PPE in the affected construction and shipyard operations. NABTU strongly disagreed with OSHA's statement in the 2017 NPRM that ''[b]aseline usage of . . . PPE is far higher in construction and shipyards (82 FR at 29216)'' (Document ID 2129, p. 7). Members of Congress commented that OSHA's preliminary estimate that there is already a high level of compliance with other OSHA standards did ''not appear to be supported by testimony from the hearing'' (Document ID 2135, p. 7). The hearing testimony ''suggests that while the abrasive blasters may have protections, there is limited or no protection for many other workers, including bystanders, who are exposed to beryllium-containing dust under the pre-existing standards'' (Document ID 2135, p. 7). The Beryllium Health and Safety Committee Task Group also expressed concern about OSHA's assumption that affected workers are required to be equipped with PPE 100 percent of the time, stating that the agency ''does not have supporting evidence of consistent and standard use across pot tenders and cleanup activities supporting abrasive blasting'' (Document ID 2118, p. 5).

After reviewing the comments, OSHA is persuaded that other OSHA standards only partially overlap with the requirements of paragraph (h). Some workers exposed to beryllium in construction and shipyards, such as abrasive blasting helpers, would not be fully protected if OSHA revoked the requirements for PPE in their entirety. In addition, the overlapping PPE standards that OSHA cited in the NPRM do not contain any removal, storage, cleaning, and replacement requirements that would minimize cross-contamination and migration of beryllium dust. These provisions are necessary to protect workers who are wearing the PPE from additional inhalation exposure that could come from improper removal of the PPE.

Therefore, other standards do not completely overlap with or duplicate the standards' PPE requirements. This conclusion supports OSHA's determination not to revoke the standards' ancillary provisions in this final rule.

Hygiene Areas and Practices, Paragraph (i)

Paragraph (i) contains requirements for hygiene areas and practices. Paragraph (i) requires employers to: (1) Provide readily accessible washing facilities to remove beryllium from the hands, face, and neck (paragraph (i)(1)(i)); (2) ensure that employees who have dermal contact with beryllium wash any exposed skin (paragraph (i)(1)(ii)); (3) provide change rooms if employees are required to use personal protective clothing and are required to remove their personal clothing (paragraph (i)(2)); (4) ensure that employees take certain steps to minimize exposure in eating and drinking areas (paragraph (i)(3)); and (5) ensure that employees do not eat, drink, smoke, chew tobacco or gum, or apply cosmetics in areas where there is a reasonable expectation of exposure above the TWA PEL or STEL (paragraph (i)(4)).

While emphasizing the importance of hygiene areas and practices in the final rule, OSHA also acknowledged that the sanitation standards in construction (29 CFR 1926.51) and shipyards (29 CFR 1915.88) include provisions similar to some of those in the beryllium standards. For example, the sanitation standards include hygiene provisions requiring the employer to provide change rooms with separate storage facilities for protective clothing whenever employees are required by an OSHA standard to wear protective clothing. The sanitation standards also require employers to provide wash

facilities and prohibits storage or consumption of food or beverages in any area where employees are exposed to a toxic material (82 FR at 2684). OSHA pointed out this potential overlap in the NPRM (82 FR at 29205).

In response to the NPRM, OSHA received only two comments that specifically addressed paragraph (i). One comment, from NABTU, expressed the need for hygiene requirements such as washing facilities, change rooms, and eating and drinking areas to prevent the spread of beryllium, noting that ''[w]hen beryllium-exposed workers are afforded washing and clean-up areas, all construction workers on the site are protected from exposure'' (Document ID 2129, p. 7). On the other hand, ABMA identified a number of existing standards, including the sanitation standards, applicable to employees in construction and shipyards, and argued that these provisions provide adequate protection from exposure to beryllium (Document ID 2142, pp. 9–10). ABMA also indicated that hygiene practices are utilized during abrasive blasting regardless of the beryllium standard due to other substance-specific standards such as lead, hexavalent chromium, cadmium, and arsenic, which require employees who are exposed to these materials through abrasive blasting to wash their hands and face (Document ID 2142, Attachment 1, p. 6).

After considering the comments, OSHA concludes that there is overlap between the sanitation standards for construction and shipyards and paragraph (i) of the beryllium rules for construction and shipyards. However, this overlap is not complete. For example, the sanitation standard for the construction industry prohibits ''consum[ing] food or beverages in . . . any area exposed to a toxic material,'' 29 CFR 1926.51(g), and the sanitation standard for shipyards similarly prohibits the consumption or storage of ''food, beverages, and tobacco products . . . in any area where employees may be exposed to hazardous or toxic substances,'' 29 CFR 1915.88(h). The beryllium standards, on the other hand, contain more exacting requirements that do not overlap with these requirements—specifically, requirements that employers keep ''surfaces in eating and drinking areas . . . as free as practicable of beryllium,'' 29 CFR 1915.1024(i)(3)(i) and 1926.1124(i)(3)(ii), and prohibit ''employees [from] enter[ing] any eating or drinking area with personal protective clothing or equipment unless, prior to entry, surface beryllium has been removed from the clothing or equipment by methods that do not disperse beryllium into the air or onto an employee's body,'' 29 CFR 1915.1024(i)(3)(ii) and 1926.1124(i)(3)(iii).

Thus, other standards do not completely overlap the standards' hygiene area and practices requirements.

Housekeeping, Paragraph (j)

Paragraph (j) requires employers in both construction and shipyards to follow the cleaning procedures in their written exposure control plan, clean up spills and emergency releases promptly, use appropriate cleaning methods, and provide recipients of beryllium containing materials for disposal with a copy of the warnings described in paragraph (m) (82 FR at 2688). In the preamble to the 2017 final rule, OSHA indicated that these provisions are important because they minimize sources of exposure to beryllium that engineering controls do not completely eliminate (82 FR at 2689).

In the NPRM, OSHA identified other OSHA standards that might duplicate some provisions of paragraph (j) (82 FR at 29197). These included the construction ventilation standard, 29 CFR 1926.57(f)(7), which requires that dust not be allowed to accumulate outside abrasive blasting enclosures and that spills be cleaned up promptly. Other standards applicable to abrasive blasting operations in construction, 29 CFR 1926.57(f)(3) and (f)(4), also require exhaust ventilation and dust collection and removal systems. Likewise, certain provisions of OSHA's general ventilation standard for abrasive blasting, 29 CFR 1910.94(a), apply to shipyards. For example, 29 CFR 1910.94(a)(7)) requires that ''[d]ust shall not be permitted to accumulate on the floor or on ledges outside of an abrasive-blasting enclosure, and dust spills shall be cleaned up promptly . . .'' (82 FR at 29197). OSHA stated that compliance with these provisions ''already ensures that employers take some steps during the blasting operations to prevent accumulations of dust sufficient to create exposures exceeding the PEL in clean-up after blasting operations are completed'' (82 FR at 29197).

Some commenters supported revocation of paragraph (j) on the basis of overlapping and duplicative provisions (*e.g.,* Document ID 2142, Attachment 1, p. 7 (citing 29 CFR 1926.57(f)(7)). However, other commenters argued that at least some of the beryllium standards' housekeeping provisions are not duplicated by other OSHA standards. For example, NABTU indicated that the ventilation standard does not prohibit dry sweeping and brushing, which are prohibited by the beryllium standards except in limited circumstances (Document ID 2129, p. 9; see also 2140, p. 8). Similarly, the AFL–CIO pointed out that abrasive blasting cleanup workers who clean and recycle spent abrasive would not be protected by other OSHA standards when performing these tasks (Document ID 2140, p. 8).

After reviewing the comments, OSHA is persuaded that other OSHA standards do not completely overlap with, or duplicate the protections of, the construction and shipyards standards' housekeeping requirements. Some workers exposed to beryllium, such as abrasive blasting cleanup workers, would not be adequately protected if OSHA revoked paragraph (j) in its entirety. In addition, the provisions prohibiting dry sweeping, dry brushing, and the use of compressed air except under certain circumstances are not contained in other OSHA standards. OSHA's determination that other standards do not completely overlap with the beryllium standards' housekeeping requirements supports the agency's decision not to revoke the standards' ancillary provisions in this final rule.

Medical Surveillance, Paragraph (k)

Paragraph (k) includes provisions for medical surveillance in connection with occupational exposure to beryllium. It requires employers in both construction and shipyards to offer eligible employees, at no cost to the employee, participation in the medical surveillance program. Paragraph (k) specifies requirements of the medical surveillance program, such as which employees are eligible for medical surveillance, as well as the frequency and content of medical examinations.

As explained in the 2017 final rule, the purposes of medical surveillance for beryllium are: (1) To identify beryllium-related adverse health effects so that appropriate intervention measures can be taken; (2) to determine if an employee has any condition that might make him or her more sensitive to beryllium exposure; and (3) to determine the employee's fitness to use personal protective equipment such as respirators (82 FR at 2696). The inclusion of medical surveillance in the beryllium standards for construction and shipyards is consistent with section 6(b)(7) of the OSH Act (29 U.S.C. 655(b)(7)), which requires that, where appropriate, medical surveillance programs be included in OSHA health standards to aid in determining whether the health of employees is adversely

affected by exposure to the hazards addressed by the standard.

In the NPRM, OSHA asked several specific questions regarding whether it should keep all or some of the standard's medical surveillance requirements (82 FR at 29183). While some comments that OSHA received in response to these questions supported revocation (see *e.g.,* Document ID 2142, pp. 3, 16–19), most of the stakeholders that responded to OSHA's request for comment on issues related to medical surveillance argued that the agency should retain the medical surveillance provisions in the construction and shipyards standards (see, Document ID 2117, pp. 1–2; 2140, pp. 5, 8–9; 2130, pp. 1–2; 2132, pp. 1–2; 2118, pp.1–3; 2121, p. 3; 2119, p. 2; 2133, pp. 1–3; 2106, pp. 3, 4, 6, 7; 2129, pp. 1, 3–5, 7–8, 10; 2123, pp. 1–3; 2134, p. 2; 2131, pp. 1–2; 2124, pp. 6, 12; 2136, pp. 1–3; 2135, pp. 2–4).

Of significance to this final rule, several stakeholders noted that no other standards require medical surveillance for beryllium-exposed workers in the shipyard or construction sectors (see, *e.g.,* Document ID 2106, p. 6; 2133, p. 1; 2140, p. 5). OSHA agrees with these comments. OSHA therefore concludes that the beryllium standards' medical surveillance provisions do not overlap with any other OSHA standard. This conclusion supports OSHA's determination not to revoke the standard's ancillary provisions in this final rule.

Medical Removal Protection, Paragraph (l)

Paragraph (l) of the standards establishes requirements for medical removal, which apply only to a limited category of workers who are suffering health effects related to their exposure to beryllium. Medical removal benefits include, at the employee's choice, either remaining in a job with exposures above the action level while using respiratory protection or being transferred to a job with exposures below the action level, along with maintenance of earnings and other benefits for six months. OSHA determined in the 2017 final rule that medical removal provisions provide workers with incentives to participate in the medical surveillance program, and that they also give workers with sensitization or CBD the opportunity and means to minimize further exposure to beryllium (82 FR at 2724). Although OSHA considered in the 2017 NPRM whether other OSHA standards might provide equivalent protections to affected workers, the agency's review of existing standards found that no other standards duplicate the requirements of paragraph (l). Similarly, several commenters stated that there are no overlapping or duplicative OSHA requirements for medical removal related to beryllium exposure (see, *e.g.,* Document ID 2106, p. 6; 2134, p. 2), and no commenters pointed to other OSHA standards that provide overlapping protections. OSHA's conclusion that there is no overlap supports its determination not to revoke the standard's ancillary provisions in this final rule.

Communication of Hazards, Paragraph (m)

Paragraph (m) sets forth the employer's obligations to comply with OSHA's hazard communication standard (HCS) (29 CFR 1910.1200) relative to beryllium, and to provide warnings and training to employees about the hazards of beryllium.

In the 2017 final rule, OSHA discussed the importance of the communication of hazards provision (see 82 FR at 2724–29). The agency pointed out the need for employees to understand the hazards of beryllium exposure, the protective measures necessary to minimize potential health hazards, and the rights afforded them under these standards. OSHA also noted that the training requirements serve to explain and reinforce the information available on labels and Safety Data Sheets (SDSs), which are most effective when employees understand the information (82 FR at 2724). Because beryllium is a hazardous chemical with serious and debilitating health effects, it is imperative that employers ensure that employees can demonstrate that they understand the training materials and have knowledge of the topics covered during the training sessions.

In the NPRM, OSHA stated that 29 CFR 1926.21 requires construction employers to train their employees in the recognition and avoidance of unsafe conditions, and that, in particular, § 1926.21(b)(3) requires that employers instruct employees on the safe handling and use of harmful substances, and make employees aware of the potential hazards, personal hygiene, and personal protective measures required (82 FR at 29221). OSHA further stated that the HCS, which applies to the construction and shipyard industries (29 CFR 1915.1200, 1926.59), requires training, including training on the hazards of the chemicals in the work area and the appropriate work practices, emergency procedures, and personal protective equipment to be used (29 CFR 1910.1200(h)(3)) (Id. at 29221–29222).

Some commenters stated either generally that the ancillary provisions of the construction and shipyards rules were duplicative of other OSHA standards, or specifically that adequate hazard communication protections were already contained in the HCS and OSHA's abrasive blasting guidance (see, *e.g.,* Document ID 2120, p. 6; 2122, p. 2; 2142 Attachment 1, p. 6). Other commenters stated that, if OSHA rescinded the standards' ancillary provisions, employers in the construction and shipyards industry would not be required to conduct the beryllium-specific training required by the rules (see, *e.g.,* Document ID 2121, p. 3; 2129, pp. 4, 10; 2133, p. 2; 2134, p. 2).

After considering the comments, OSHA concludes that there is some, but not complete, overlap between other OSHA standards and paragraph (m) of the beryllium standards for construction and shipyards. As OSHA stated in the 2017 final rule, the beryllium standards' hazard communication requirements were intended to be ''substantively as consistent as possible with the HCS,'' but also included ''additional specific requirements needed to protect employees exposed to beryllium'' (82 FR at 2724).

First, paragraph (m) of the beryllium standards goes beyond the requirements of the HCS. For example, paragraph (m)(3)(ii) of the beryllium standards requires specific training on the signs and symptoms of CBD, the employer's written exposure control plan, specific operations that can lead to employee exposure to beryllium, measures that employees can take to protect themselves from exposure, and the purpose and description of the medical surveillance and medical removal protection requirements of the standards. These topics would not necessarily be covered by training that is required by the hazard communication standard.

Moreover, the beryllium standards require employers to provide employees with training on the specific hazards associated with beryllium exposure; as OSHA stated in the 2017 final rule, ''[w]hile OSHA agrees that the HCS is designed to cover all chemical hazards in the workplace[,] . . . OSHA finds that employees need to be trained on the hazards specifically associated with beryllium, in addition to the training they receive under the HCS'' (82 FR at 2726). Finally, the beryllium-specific training required by the construction and shipyards standards must be provided more often than what the HCS alone would require; after receiving initial training (as required by paragraph (h)(1) of the HCS), the beryllium standards require that employees

receive annual retraining on the beryllium hazards (29 CFR 1915.1024(m)(4)(i)(C) and 1926.1124(m)(3)(i)(C)).

Second, paragraph (m) of the beryllium standards goes beyond the requirements of 29 CFR 1926.21. Compliance with that standard would not require employers to meet the more exacting requirements of the beryllium standard, such as the annual retraining requirement.

Therefore, other standards do not completely overlap the beryllium standards' communication of hazard requirements. This conclusion supports OSHA's determination not to revoke the standards' ancillary provisions in this final rule.

Recordkeeping, Paragraph (n)

Paragraph (n) of the construction and shipyards standards for beryllium requires employers to make and maintain records of air monitoring data, objective data, medical surveillance, and training. Employers must maintain the records, and make them available to employees and their designated representatives, in accordance with OSHA's records access standard, 29 CFR 1910.1020. In the 2017 final rule, OSHA pointed out that the requirement to maintain records of exposure assessments is critical because the records enable employers to ensure compliance with the exposure assessment provisions, and ascertain which of the standards' provisions are triggered based on the assessments (82 FR at 2729–2730). OSHA described the medical surveillance records requirement as necessary for the protection of employee health and proper enforcement of the standards (82 FR at 2732). Finally, according to OSHA, the creation and maintenance of training records under paragraph (n)(4) permits both OSHA and employers to ensure that the required training occurs on schedule (82 FR at 2733).

In the NPRM, OSHA proposed to remove all recordkeeping requirements for the construction and shipyards beryllium standards as part of the proposed removal of all of the standards' ancillary provisions (82 FR at 29183). Removal of paragraph (n) would have been consistent with the proposed removal of the other ancillary provisions because the recordkeeping provisions are dependent on those other provisions; for example, without the standards' medical surveillance requirements, there would be no medical surveillance records to create or maintain. The proposed removal of the ancillary provisions was based on OSHA's preliminary determination that a number of other OSHA standards apply to the primary operations involving beryllium exposure in construction and shipyards, resulting in duplicative protections (82 FR at 29183).

OSHA did not receive any comments that were responsive to the issue of whether other OSHA standards impose recordkeeping requirements that overlap with or duplicate the requirements in paragraph (n). OSHA's own analysis, however, indicates that there is no overlap with other standards. OSHA's access to employee exposure and medical records standard, 29 CFR 1910.1020, governs the preservation and maintenance of employee exposure and medical records, as well as access to those records for employees and designated representatives. However, the records access standard does not require the creation of those records. Instead, paragraph (n) of the beryllium standards contains the requirements for employers to create records related to beryllium, including records of exposure assessment, medical surveillance, and training. It then refers to 29 CFR 1910.1020 for the requirements governing preservation and maintenance of, and access to, those records (*e.g.,* paragraph (n)(1)(iii)). Paragraph (n) and 29 CFR 1910.1020 are, therefore, complementary, rather than overlapping or duplicative.

OSHA has determined that no other OSHA standards contain recordkeeping requirements that are duplicative of the recordkeeping requirements in paragraph (n) of the beryllium standards for construction and shipyards. This conclusion supports OSHA's determination not to revoke the standard's ancillary provisions in this final rule.

Conclusion

Based on the discussion above, the agency is not finalizing its proposed revocation of the ancillary provisions in the construction and shipyards standards. Instead, OSHA has decided to proceed with a new, more comprehensive proposal to amend the standards that accounts for the protections of other OSHA standards, where appropriate, and maintains a high level of worker protection. The new proposal will also ensure consistency with the general industry standard, both in terms of the changes made via the DFR in July 2016 (see 83 FR 31045) and the additional changes proposed by OSHA in December 2018 (see 83 FR 63746).

C. Changes to the Compliance Dates in Paragraph (o)

Paragraph (o) of the standards for construction and shipyards sets forth the effective date of the standards as well as the dates for compliance with their requirements. The 2017 final rule set the compliance dates as follows: March 12, 2018, for all obligations of the standards, except for change rooms, which were required to be provided by March 11, 2019, and engineering controls, which had to be implemented by March 10, 2020 (29 CFR 1915.1024(o)(2); 29 CFR 1926.1124(o)(2)). In the NPRM, which was published in June 2017, OSHA announced that it would not enforce the 2017 construction and shipyards standards ''without further notice while this new rulemaking is underway'' (82 FR at 29183). Subsequently, in March 2018, OSHA stated that it would begin enforcing the PEL and STEL on May 11, 2018 (see Memorandum for Regional Administrators, Delay of Enforcement of the Beryllium Standards under 29 CFR 1910.1024, 29 CFR 1915.1024, and 29 CFR 1926.1124, Mar. 2, 2018, available at: *https://www.osha.gov/laws-regs/standardinterpretations/2018-03-02*). OSHA also clarified in a May 9, 2018, interim enforcement memorandum that it would begin enforcing the construction and shipyards beryllium standards' PEL and STEL on May 11, 2018, but would not enforce any other provisions of those standards absent further notice (see Interim Enforcement Memorandum and Notice of Delay in Enforcement for Certain Provisions of the Beryllium Standards, May 9, 2018, available at: *https://www.osha.gov/laws-regs/standardinterpretations/2018-05-09*). Since May 11, 2018, OSHA has been enforcing only the exposure limits, which are contained in paragraph (c) of both standards.

In the NPRM, OSHA requested comment on whether the agency should delay the compliance dates of the construction and shipyards standards for an additional year (see 82 FR at 29183). This delay ''would give affected employers additional time to come into compliance with [the standards'] requirements, which could be warranted by the uncertainty created by this proposal'' (82 FR at 29183). After careful consideration of the information received in response to this request for comments, and for the reasons set out below, OSHA has determined that it is appropriate to extend the compliance dates for all ancillary provisions of the construction and shipyards standards for beryllium to September 30, 2020. This final rule has no effect on

compliance with the requirements of paragraph (c); compliance with the PEL and STEL has been enforced since May 2018.

OSHA received comments both for and against the proposed delay of the compliance dates for the construction and shipyards standards. Employers and trade associations by and large supported delaying the compliance date by a year (*e.g.,* Document ID 2125, p. 23; 2145, Comments, p. 36; 2141, Comments, pp. 1–2, 11). ABMA stated that, ''[s]hould OSHA retain or promulgate any new beryllium standards for construction and shipyards,'' an additional year would be necessary to allow the industries ''sufficient time to prepare for and implement [the] standards'' (Document ID 2142, Comments, p. 4). Newport News Shipbuilding stated that additional time was particularly important in order for employers to figure out how to comply with the exposure assessment provisions of the standards for blasting operations (Document ID 2095, p. 1). The Beryllium Health and Safety Committee Task Group, which argued that all ancillary provisions should be retained, nevertheless urged OSHA to implement a one-year compliance deadline delay (see Document ID 2118, pp. 1–2). The Task Group noted that the ancillary provisions impose extensive compliance obligations, and that additional time would be necessary for employers to engage in research and collaboration on the exposure monitoring provisions and to incorporate the medical surveillance obligations into their policies and programs (see Document ID 2118, p. 2). Similarly, several public health and medical experts who strongly opposed revoking the ancillary provisions stated they had no objection to the proposal to extend the compliance dates (see Document ID 2123, p. 3).

The West Virginia Oil and Natural Gas Association argued that the uncertainty over whether the ancillary provisions of the construction and shipyards standards would be eventually withdrawn by OSHA makes a delay of compliance obligations necessary (see Document ID 2122, p. 4; see also 2145, Comments, p. 36). CISC also cited ''the posture of this rulemaking and the uncertainty surrounding it'' as reasons that the regulated industries would need additional time to determine the impact of any future final rule (Document ID 2125, p. 23). Century Aluminum Company (Century Aluminum) indicated that a delay of the ''complex and burdensome'' compliance requirements was necessary so that ''employers do not spend immense amounts of time and money to comply with requirements that ultimately are amended or rescinded'' (Document ID 2141, Comments, p. 11; see also 2141, Attachment 3, pp. 9–10 (''if appropriate revisions to the final Rule cannot be achieved within an adequate period of time, a stay of the compliance dates may become necessary to avoid unwarranted burdens'')).

Other commenters, including labor organizations, public interest groups, and private citizens, firmly opposed OSHA's proposed extension of the compliance dates (*e.g.,* Document ID 2140, p. 9; 2129, p. 11; 2132, p. 2; 2133, p. 4; 2084). These commenters were primarily concerned that any further delay in implementing the standards would prolong workers' exposures to unsafe levels of beryllium, increasing their risk of beryllium-related health effects (*e.g.,* Document ID 2140, p. 9). As Dr. Lee S. Newman stated, ''[k]nowing that construction and shipyard workers are at risk for developing incurable lung disease that can be prevented by compliance with this standard, it is morally and ethically indefensible to delay'' (Document ID 2136, p. 4). The Union of Concerned Scientists emphasized that, until compliance with the standards is required, ''workers will continue to be exposed to beryllium at levels clearly known to be unsafe'' (Document ID 2131, p. 2; see also 2130, p. 2). NELP and National Jewish Health also pointed out that employers were given more than a year to comply with most provisions of the standards, and over three years for others, making additional time unnecessary and unwarranted (Document ID 2133, p. 4; 2106, p. 7).

Commenters, furthermore, pointed out that the uncertainty cited by OSHA as a reason for delaying the compliance deadlines was of OSHA's own making. As one private citizen stated, ''[t]he government should not first deliberately create uncertainty about a rule and then cite that uncertainty as a reason to weaken the rule and endanger workers'' (Document ID 2081; see also 2130, p. 2). Public Citizen noted that, if OSHA were to finalize the rule as proposed, rescinding the vast majority of the current standards, compliance with the new PEL- and STEL-only standards would be easier and there would be even less justification for the proposed delay (Document ID 2134, p. 4). Similarly, according to NABTU, because OSHA has ''not even suggested that it is infeasible for employers to comply with the standard, there is no basis for any further delay in the compliance date'' (Document ID 2129, p. 11).

After careful consideration of the comments, and in light of OSHA's intent to propose different amendments to the standards, OSHA has decided to finalize the proposed delay of the compliance deadlines for approximately one year in both the construction and shipyards standards. The effective date of the standards remains unchanged. Amended paragraph (o)(2)(i) states that employers' obligations under the exposure limit requirements in paragraph (c) commenced on March 12, 2018. Thus, paragraph (o)(2)(i) reiterates that those obligations went into effect in conformance with paragraph (o)(2) of the 2017 final rule. Amended paragraph (o)(2)(ii) reflects the new, delayed compliance date of September 30, 2020 for all other obligations of the standards.

OSHA's decision to delay compliance until September 30, 2020 reflects the agency's determination that it would be unfair to the regulated community to expect compliance by the dates in the standards given the agency's decisions to retain all ancillary provisions in this final rule and propose different amendments to the standard in a forthcoming proposal. As argued by CISC, the high level of uncertainty inherent in this regulatory posture makes additional time essential (see Document ID 2125, p. 23). In fact, the regulated community is facing even more uncertainty now than it was in 2017 when the NPRM was published. Requiring compliance with the 2017 final rule, or even requiring employers to expend time and money determining how to comply with 2017 final rule, would make little sense when the standards, as noted by Century Aluminum and ABMA, may ultimately be amended (see Document ID 2141, Comments, p. 11; 2142, Comments, p. 4). In finalizing the proposed compliance date extension but not the proposed revocation of all ancillary provisions, OSHA concurs with commenters like the Beryllium Health and Safety Committee Task Group and several public health and medical experts, all of whom opposed revoking the ancillary provisions but did not object to a delay of the compliance dates (see Document ID 2118, pp. 1–2; 2123, p. 3).

In finalizing the compliance delay, the agency is also being consistent with its 2018 delay of the compliance dates for many of the ancillary provisions in the beryllium standard for general industry (see 83 FR 25536 (June 1, 2018) (NPRM); 83 FR 39351 (Aug. 9, 2018) (final rule)). There, OSHA planned to propose modifications to those ancillary provisions; the agency reasoned that it would not make sense for either the

agency or the regulated community for OSHA to begin enforcement of requirements that would be affected by changes made in the upcoming rulemaking. Employers would likely have to take unnecessary measures to comply with provisions that could subsequently be modified, resulting in wasted resources. Furthermore, the compliance date extension for the beryllium general industry standard gave OSHA time to prepare and publish the planned substantive NPRM to amend the standard before employers were required to comply with the affected provisions of the rule (see 83 FR 25536). The reasons OSHA gave in 2018 for delaying compliance with the general industry provisions are applicable to the agency's current final action in delaying the compliance dates for the ancillary provisions of the construction and shipyards standards. Indeed, the rationale has particular force here. Unlike in general industry, where OSHA planned merely to revise existing requirements in the standard, OSHA here previously proposed to revoke the ancillary provisions of the construction and shipyards standards entirely. As such, employers in these industries likely have not prepared to comply with any portion of these provisions.

In general industry, OSHA proposed to delay the compliance date for certain ancillary provisions to allow the agency time to issue a new proposal and expressed its intention to rely on its de minimis enforcement policy while the rulemaking was pending so that employers could comply with the proposed provisions without risk of a citation (83 FR at 25537). Such an approach was appropriate in the general industry context, where the agency planned to propose discrete changes to provisions that employers otherwise expected to go into full effect. Here, however, OSHA does not believe reliance on its de minimis policy is appropriate. If finalized as proposed, the 2017 NPRM would have eliminated any requirement for employers to comply with the ancillary provisions of the shipyard and construction standards. Given OSHA's decision not to revoke these provisions in this rulemaking and instead to propose revisions to the ancillary provisions in a forthcoming rulemaking action, OSHA believes that it is appropriate to apply a one-year compliance extension to allow employers to prepare to comply. The proposed delay was supported by several commenters (Document ID 2125, p. 23; 2141, p. 11; 2142, p. 4). OSHA also notes that this is consistent with the agency's approach in the 2017 final rule, where the agency similarly gave all industries one year before any compliance obligations began.

OSHA recognizes the comments highlighting the urgent need for these standards and the effect on workers' health that could occur in the period before compliance is achieved (*e.g.,* Document ID 2136, p. 4; 2130, p. 2). However, OSHA notes that the comments highlighting the high levels of exposure that workers would continue to experience during a compliance delay (*e.g.* Document ID 2140, p. 9; 2131, p. 2) were submitted in 2017, before OSHA began to enforce any aspects of the standards. Since May 2018, the agency has been enforcing the new, lower exposure limits, providing important protection for workers who were previously exposed above these limits (see Memorandum for Regional Administrators, Delay of Enforcement of the Beryllium Standards under 29 CFR 1910.1024, 29 CFR 1915.1024, and 29 CFR 1926.1124, Mar. 2, 2018, available at: *https://www.osha.gov/laws-regs/standardinterpretations/2018-03-02).* OSHA reiterates that employers must continue to comply with paragraph (c) (the PEL and STEL) as subsequent rulemaking efforts proceeds (see 29 CFR 1915.1024(o)(2)(i) and 29 CFR 1926.1124(o)(2)(i), as amended).

Similarly, OSHA acknowledges the comment, from NABTU, that OSHA has not determined compliance with the 2017 final rule to be infeasible for construction and shipyard employers, and the comment from Public Citizen that compliance with the proposed rule (rescinding all ancillary provisions but retaining the PELs) would have been much easier to achieve than compliance with the 2017 final rule (see Document ID 2129, p. 11; 2134, p. 4). OSHA still considers compliance with the 2017 final rule to be feasible; the agency has not stated otherwise. Regardless of feasibility, however, it would not make sense for OSHA to require employers to comply with, or prepare to comply with, ancillary provisions that are in a state of flux, especially given that OSHA is enforcing the lower PELs. As for Public Citizen's comment that compliance with a final rule revoking all ancillary provisions would have been simpler for employers to comply with (see Document ID, Attachment 2134, p. 4), OSHA agrees but, as discussed above, the agency is not finalizing that portion of the NPRM.

Finally, OSHA recognizes the comments, from the American Thoracic Society and a private citizen, noting that the current regulatory uncertainty is of OSHA's own making (Document ID 2081; see also Document ID 2130, p. 2). However, as explained herein, OSHA has determined that it is more important to proceed apace with a new proposal than to require compliance with a standard that is subject to change in the near future. The new proposal will account for regulatory overlap, where it exists, be consistent with the general industry beryllium standard, where appropriate, and maintain crucial worker protections.

List of Subjects in 29 CFR Parts 1915 and 1926

Beryllium, Cancer, Chemicals, Hazardous substances, Health, Occupational safety and health.

Authority and Signature

This document was prepared under the direction of Loren Sweatt, Principal Deputy Assistant Secretary of Labor for Occupational Safety and Health, U.S. Department of Labor. The agency issues the sections under the following authorities: 29 U.S.C. 653, 655, 657; 40 U.S.C. 3704; 33 U.S.C. 941; Secretary of Labor's Order 1–2012 (77 FR 3912 (1/25/2012)); and 29 CFR part 1911.

Signed at Washington, DC, on September 24, 2019.

Loren Sweatt,

Principal Deputy Assistant Secretary of Labor for Occupational Safety and Health.

Amendments to Standards

For the reasons set forth in the preamble, chapter XVII of title 29, parts 1915 and 1926, of the Code of Federal Regulations is amended as follows:

PART 1915—OCCUPATIONAL SAFETY AND HEALTH STANDARDS FOR SHIPYARD EMPLOYMENT

■ 1. The authority citation for part 1915 continues to read as follows:

Authority: 33 U.S.C. 941; 29 U.S.C. 653, 655, 657; Secretary of Labor's Order No. 12–71 (36 FR 8754); 8–76 (41 FR 25059), 9–83 (48 FR 35736), 1–90 (55 FR 9033), 6–96 (62 FR 111), 3–2000 (65 FR 50017), 5–2002 (67 FR 65008), 5–2007 (72 FR 31160), 4–2010 (75 FR 55355), or 1–2012 (77 FR 3912); 29 CFR part 1911; and 5 U.S.C. 553, as applicable.

■ 2. Amend § 1915.1024 by revising paragraph (o)(2) to read as follows:

§ 1915.1024 Beryllium.

* * * * *

(o) * * *

(2) *Compliance dates.* (i) All obligations contained in paragraph (c) of this standard commence and become enforceable on March 12, 2018; and

(ii) All other obligations of this standard commence and become enforceable on September 30, 2020.

PART 1926—SAFETY AND HEALTH REGULATIONS FOR CONSTRUCTION

Subpart Z—Toxic and Hazardous Substances

■ 3. The authority citation for subpart Z of part 1926 continues to read as follows:

Authority: 40 U.S.C. 3704; 29 U.S.C. 653, 655, 657; and Secretary of Labor's Order No. 12–71 (36 FR 8754), 8–76 (41 FR 25059), 9–83 (48 FR 35736), 1–90 (55 FR 9033), 6–96 (62 FR 111), 3–2000 (65 FR 50017), 5–2002 (67 FR 65008), 5–2007 (72 FR 31160), 4–2010 (75 FR 55355), or 1–2012 (77 FR 3912) as applicable; and 29 CFR part 1911.

Section 1926.1102 not issued under 29 U.S.C. 655 or 29 CFR part 1911; also issued under 5 U.S.C. 553.

■ 2. Amend § 1926.1124 by revising paragraph (o)(2) to read as follows:

§ 1926.1124 Beryllium.

* * * * *

(o) * * *

(2) *Compliance dates.* (i) All obligations contained in paragraph (c) of this standard commence and become enforceable on March 12, 2018; and

(ii) All other obligations of this standard commence and become enforceable on September 30, 2020.

[FR Doc. 2019–21037 Filed 9–27–19; 8:45 am]

BILLING CODE 4510–26–P

DEPARTMENT OF LABOR

Mine Safety and Health Administration

30 CFR Parts 56 and 57

[Docket No. MSHA–2014–0030]

RIN 1219–AB92

Examinations of Working Places in Metal and Nonmetal Mines

AGENCY: Mine Safety and Health Administration, Labor.

ACTION: Technical amendments; conforming to Court order.

SUMMARY: The Mine Safety and Health Administration (MSHA) is reinstating the regulatory provisions for examinations of working places in metal and nonmetal mines published on January 23, 2017. The U.S. Court of Appeals for the District of Columbia Circuit issued an order on June 11, 2019, and a mandate on August 23, 2019, requiring this action.

DATES: Effective September 30, 2019.

FOR FURTHER INFORMATION CONTACT: Sheila A. McConnell, Director, Office of Standards, Regulations, and Variances, MSHA, at *mcconnell.sheila.a@dol.gov* (email), 202–693–9440 (voice), or 202–693–9441 (fax). These are not toll-free numbers.

SUPPLEMENTARY INFORMATION: On January 23, 2017, MSHA published a final rule, Examinations of Working Places in Metal and Nonmetal Mines (MNM), amending the Agency's standards for the examinations of working places in MNM mines, 30 CFR 56.18002 and 57.18002 (82 FR 7680). The final rule required that an examination of the working place be conducted at least once each shift before miners begin working in that place, that operators notify miners in the affected areas of any conditions found that may adversely affect their safety or health, that operators promptly initiate corrective actions, and that a record be made of the examination. The final rule required the examination record to include: The name of the person conducting the examination, the date of the examination, the location of all areas examined, a description of each condition found that may adversely affect the safety or health of miners, and the date of corrective action. In addition, the final rule required the operator to make the examination record available to the authorized representative of the Secretary and miners' representatives and provide a copy upon request.

On September 12, 2017, MSHA reopened the record and proposed limited changes addressing two issues: (1) The timing of working place examinations; and (2) which adverse conditions and corrective actions must be included in the working place examinations record (82 FR 42757). Specifically, MSHA proposed amending the introductory text of §§ 56.18002(a) and 57.18002(a) to require that an examination of a working place be conducted before work begins or as miners begin work in that place. The Agency also proposed amending paragraphs (b) and (c) of §§ 56.18002 and 57.18002 to require that the examination record include descriptions of only those adverse conditions that are not corrected promptly and the dates of their corrective actions. After receiving comments, MSHA published a final rule on April 9, 2018 (''April 2018 rule'') (83 FR 15055) revising the introductory text of paragraph (a) of §§ 56.18002 and 57.18002, and paragraphs (b) and (c) of §§ 56.18002 and 57.18002.

On May 9, 2018, the United Steel, Paper and Forestry, Rubber, Manufacturing, Energy, Allied Industrial and Service Workers International Union, AFL–CIO–CLC and United Mine Workers of America International Union petitioned the U.S. Court of Appeals for the District of Columbia Circuit to review the April 2018 rule. The petitioners argued that the April 2018 rule violated the no-less protection requirement under sec. 101(a)(9) of the Federal Mine Safety and Health Act of 1977, 30 U.S.C. 811(a)(9), and also was ''arbitrary and capricious'' under the Administrative Procedure Act. See 5 U.S.C. 706.

On June 11, 2019, the Court vacated the April 2018 final rule and ordered the January 23, 2017 final rule reinstated. *United Steel Workers, et al.* v. *MSHA, D.C. Cir. No. 18–1116.* On July 25, 2019, the Secretary petitioned the Court for a panel rehearing. The Court denied the petition for rehearing on August 14, 2019. The Court issued a mandate on August 23, 2019. Accordingly, in this document, MSHA recognizes the legal effect of the court order and revises §§ 56.18002 and 57.18002 to reinstate the regulatory provisions established by the January 23, 2017 final rule.

The rule is effective immediately; however, MSHA will use the first 90 days to fully implement the rule. During this time, MSHA will hold informational stakeholder meetings and provide in-person compliance and technical assistance to ensure that miners and mine operators understand the rule's requirements. The dates, times, locations, and other information will be announced in a separate document in the **Federal Register**, and will be posted on *www.msha.gov.* Compliance assistance materials that include the MSHA's inspector training materials will be available on the Agency's website at *www.msha.gov.*

MSHA determined that the final rule published on January 23, 2017, will result in $34.5 million in annual costs for the MNM industry (82 FR 7680, 7682). At that time, the Agency estimated that the total undiscounted costs of the final rule over 10 years will be $345.1 million; at a 3 percent discount rate, $294.4 million; and at a 7 percent discount rate, $242.4 million (Id.). Reinstating the provisions of this final rule will eliminate the $27.6 million savings estimated for the April 2018 rule (83 FR 15055, 15056).

MSHA determined that the January 23, 2017 final rule would not have an annual effect of $100 million or more on the economy and, therefore, is not an economically significant regulatory action pursuant to section 3(f) of Executive Order (E.O.) 12866 (82 FR 7680, 7688). The analyses relating to overall cost, feasibility, Regulatory Flexibility Analysis, and Paperwork Reduction Act of 1995 costs of the final

rule remain unchanged since its publication on January 23, 2017. Based on the requirements of E.O. 13771, the $27.6 million annual savings attributed to fiscal year 2018 is now a regulatory cost for the current fiscal year.

List of Subjects in 30 CFR Parts 56 and 57

Metals, Mine safety and health, Reporting and recordkeeping requirements.

David G. Zatezalo,

Assistant Secretary of Labor for Mine Safety and Health Administration.

For the reasons set out in the preamble, and under the authority of the Federal Mine Safety and Health Act of 1977, as amended by the Mine Improvement and New Emergency Response Act of 2006, MSHA is amending chapter I of title 30 of the Code of Federal Regulations as follows:

PART 56—SAFETY AND HEALTH STANDARDS—SURFACE METAL AND NONMETAL MINES

■ 1. The authority citation for part 56 continues to read as follows:

Authority: 30 U.S.C. 811.

■ 2. Revise § 56.18002 to read as follows:

§ 56.18002 Examination of working places.

(a) A competent person designated by the operator shall examine each working place at least once each shift before miners begin work in that place, for conditions that may adversely affect safety or health.

(1) The operator shall promptly notify miners in any affected areas of any conditions found that may adversely affect safety or health and promptly initiate appropriate action to correct such conditions.

(2) Conditions noted by the person conducting the examination that may present an imminent danger shall be brought to the immediate attention of the operator who shall withdraw all persons from the area affected (except persons referred to in section 104(c) of the Federal Mine Safety and Health Act of 1977) until the danger is abated.

(b) A record of each examination shall be made before the end of the shift for which the examination was conducted. The record shall contain the name of the person conducting the examination; date of the examination; location of all areas examined; and description of each condition found that may adversely affect the safety or health of miners.

(c) When a condition that may adversely affect safety or health is corrected, the examination record shall include, or be supplemented to include, the date of the corrective action.

(d) The operator shall maintain the examination records for at least one year, make the records available for inspection by authorized representatives of the Secretary and the representatives of miners, and provide these representatives a copy on request.

PART 57—SAFETY AND HEALTH STANDARDS—UNDERGROUND METAL AND NONMETAL MINES

■ 3. The authority citation for part 57 continues to read as follows:

Authority: 30 U.S.C. 811.

■ 4. Revise § 57.18002 to read as follows:

§ 57.18002 Examination of working places.

(a) A competent person designated by the operator shall examine each working place at least once each shift before miners begin work in that place, for conditions that may adversely affect safety or health.

(1) The operator shall promptly notify miners in any affected areas of any conditions found that may adversely affect safety or health and promptly initiate appropriate action to correct such conditions.

(2) Conditions noted by the person conducting the examination that may present an imminent danger shall be brought to the immediate attention of the operator who shall withdraw all persons from the area affected (except persons referred to in section 104(c) of the Federal Mine Safety and Health Act of 1977) until the danger is abated.

(b) A record of each examination shall be made before the end of the shift for which the examination was conducted. The record shall contain the name of the person conducting the examination; date of the examination; location of all areas examined; and description of each condition found that may adversely affect the safety or health of miners.

(c) When a condition that may adversely affect safety or health is corrected, the examination record shall include, or be supplemented to include, the date of the corrective action.

(d) The operator shall maintain the examination records for at least one year, make the records available for inspection by authorized representatives of the Secretary and the representatives of miners, and provide these representatives a copy on request.

[FR Doc. 2019–20852 Filed 9–27–19; 8:45 am]

BILLING CODE 4520–43–P

DEPARTMENT OF DEFENSE

Department of the Air Force

32 CFR Part 881

[Docket ID: USAF–2019–HQ–0005]

RIN 0701–AA91

Determination of Active Military Service and Discharge for Civilian or Contractual Groups

AGENCY: Department of the Air Force, DoD.

ACTION: Final rule.

SUMMARY: This final rule removes the Department of the Air Force's regulation containing procedures for processing discharge applications of civilians or contractors claiming prior active military service with the Air Force or a predecessor organization. The content of this part is addressed in a DoD-level regulation, and it is unnecessary.

DATES: This rule is effective on September 30, 2019.

FOR FURTHER INFORMATION CONTACT: Lt Col Matthew Huibregtse, 703–571–0827.

SUPPLEMENTARY INFORMATION: This final rule removes 32 CFR part 881, ''Determination of Active Military Service and Discharge for Civilian or Contractual Groups,'' which was codified on June 23, 1999 (64 FR 33400), and never updated. It has been determined that publication of this CFR part removal for public comment is impracticable, unnecessary, and contrary to public interest since it is based on removing content which is covered in the DoD-level regulation at 32 CFR part 47, ''Active Duty Service for Civilian or Contractual Groups'' (codified on September 29, 1989, at 54 FR 39993). To the extent that internal Air Force procedures concerning discharge applications are necessary, they will continue to be published in Air Force Instruction 36–2602, ''Application For Individual Discharge Of Member Of A Civilian Or Contractual Group Determined To Qualify For Active Duty Service,'' (updated January 12, 2017) which is available at: *http://static.e-publishing.af.mil/production/1/af_a1/publication/afi36-2602/afi36-2602.pdf.*

This rule is not significant under Executive Order (E.O.) 12866, ''Regulatory Planning and Review.'' Therefore; E.O. 13771, ''Reducing Regulation and Controlling Regulatory Costs'' does not apply.

List of Subjects in 32 CFR Part 881

Military personnel, Veterans.

PART 881—[REMOVED]

■ Accordingly, by the authority of 5 U.S.C. 301, 32 CFR part 881 is removed.

Adriane S. Paris,

Air Force Federal Register Liaison Officer.

[FR Doc. 2019–20607 Filed 9–27–19; 8:45 am]

BILLING CODE 5001–10–P

DEPARTMENT OF HOMELAND SECURITY

Coast Guard

33 CFR Part 100

[Docket No. USCG–2019–0150]

Special Local Regulation; Kailua Bay, Ironman World Championship, Kailua-Kona, Hawaii

AGENCY: Coast Guard, DHS.

ACTION: Notice of enforcement of regulation.

SUMMARY: The Coast Guard will enforce a special local regulation for the Ironman Ho'ala practice swim and Ironman World Championship Triathlon on October 6 and October 12, 2019, to provide for the safety of life on navigable waterways during this event. Our regulation for marine events within the Fourteenth Coast Guard District identifies the regulated area for this event on certain waters of Kailua Bay, Kailua-Kona, Hawaii. During the enforcement periods, the operator of any vessel in the regulated area must comply with directions from the Patrol Commander or any Official Patrol displaying a Coast Guard ensign.

DATES: The regulations in 33 CFR 100.1402 will be enforced from 3:45 a.m. until 11 a.m. on October 6, 2019 and October 12, 2019.

FOR FURTHER INFORMATION CONTACT: If you have questions on this document, call or email Chief Jason Olney, Waterways Management Division, U.S. Coast Guard Sector Honolulu; telephone (808) 522–8265, email *jason.r.olney@uscg.mil.*

SUPPLEMENTARY INFORMATION: The Coast Guard will enforce the special local regulation for the Ironman Ho'ala practice swim and Ironman World Championship Triathlon on October 6 and October 12, 2019. The regulated area covers all navigable waters of Kailua Bay within 100 yards adjacent to the 2.4 mile (4,224 yards) swim course, starting at the shoreline northeast of Kailua Pier at 19°38.341′ N, 155°59.782′ W; thence southeast to 19°37.416′ N, 155°59.444′ W; thence southwest to 19°37.397′ N, 155°59.500′ W; thence northwest to 19°38.150′ N, 155°59.760′ W, thence north and back to Kailua Pier at 19°38.398′ N, 155°59.816′ W, and returning along the pier to the originating point on the shoreline at to 19°38.341′ N, 155°59.782′ W. All datum are NAD 83.

Entry into, transiting, or anchoring within the special local regulation is prohibited unless authorized by the Captain of the Port Honolulu or their designated on-scene representative. The Captain of the Port's designated on-scene representative may be contacted via VHF Channel 16.

This document is issued under authority of 33 CFR 100.1402 and 5 U.S.C. 552 (a). In addition to this publication in the **Federal Register**, the Coast Guard will provide the maritime community with advance notification of the enforcement of this special local regulation via Broadcast Notice to Mariners. The Captain of the Port Honolulu or their on-scene representative may be contacted via VHF Channel 16.

Dated: September 19, 2019.

A.B. Avanni,

Captain, U.S. Coast Guard, Captain of the Port Honolulu.

[FR Doc. 2019–20765 Filed 9–27–19; 8:45 am]

BILLING CODE 9110–04–P

DEPARTMENT OF HOMELAND SECURITY

Coast Guard

33 CFR Part 100

[Docket Number USCG–2019–0150]

RIN 1625–AA08

Special Local Regulation; Kailua Bay, Ironman World Championship, Kailua-Kona, Hawaii

AGENCY: Coast Guard, DHS.

ACTION: Final rule.

SUMMARY: The Coast Guard is establishing a recurring special local regulation for certain waters of Kailua Bay, Hawaii. This action is necessary to provide for the safety of life on these navigable waters located at Kailua-Kona, HI, during the swim portion of the Ironman World Championship Triathlon and practice swim held on consecutive weekends annually in October. On both days, the swim events are held from 3:45 a.m. to 11 a.m. This rulemaking prohibits persons and vessels from being in the regulated area each day of the event unless authorized by the Captain of the Port Honolulu.

DATES: This rule is effective September 30, 2019.

ADDRESSES: To view documents mentioned in this preamble as being available in the docket, go to *https://www.regulations.gov,* type USCG–2019–0150 in the ''SEARCH'' box and click ''SEARCH.'' Click on Open Docket Folder on the line associated with this rule.

FOR FURTHER INFORMATION CONTACT: If you have questions on this rule, call or email Chief Jason Olney, Waterways Management Division, U.S. Coast Guard Sector Honolulu; telephone (808) 522–8265, email *jason.r.olney@uscg.mil.*

SUPPLEMENTARY INFORMATION:

I. Table of Abbreviations

CFR Code of Federal Regulations
DHS Department of Homeland Security
FR Federal Register
NPRM Notice of proposed rulemaking
§ Section
SLR Special Local Regulation
U.S.C. United States Code

II. Background Information and Regulatory History

On April 18, 2019, the Coast Guard published a Notice of Proposed Rulemaking (NPRM) in the **Federal Register** (84 FR 16223) entitled ''Special Local Regulation; Kailua Bay, Ironman World Championship, Kailua-Kona, Hawaii.'' In the NPRM we stated why we issued the NPRM, and invited comments on our proposed regulatory action related to this swim event. During the comment period that ended May 18, 2019, we received four comments.

This annual event consists of a practice swim and then a race swim held on two consecutive weekends in October. This event is a world famous triathlon with participants coming from around the world to compete. The event occurs within the ocean waters of Kailua Bay, HI. Each swim event consists of 2,500 participants swimming a 2.4 mile (4,224 yard) marked race course located in navigable shallow ocean waters. Because of increased spectator pleasure craft drawn to support and view the Ironman swim event, spectator vessel traffic poses a significant safety hazard due to the limited maneuverability of swim participants and vessels navigating in close proximity to the designated area.

Under 5 U.S.C. 553(d)(3), the Coast Guard finds that good cause exists for making this rule effective less than 30 days after publication in the **Federal Register**. Due to the comments received and evaluation of those comments, the Coast Guard is unable to publish this final rule in time to meet the 30 day

requirement. Delaying the effective date would be contrary to the rule's objectives of protecting safety of life on the navigable waters in the vicinity of the large swim event.

III. Legal Authority and Need for Rule

The COTP Honolulu is establishing a recurring special local regulation to be enforced from 3:45 a.m. to 11 a.m., on consecutive weekends in October annually. For both the race itself and the practice swim event, six hours are required for all participants to complete the swim course. The regulated area would cover all navigable waters of Kailua Bay within 100 yards adjacent to the 2.4 mile (4,224 yards) swim course, starting at the shoreline northeast of Kailua Pier at 19°38.341′ N, 155°59.782′ W; thence southeast to 19°37.416′ N, 155°59.444′ W; thence southwest to 19°37.397′ N, 155°59.500′ W; thence northwest to 19°38.150′ N, 155°59.760′ W, thence north and back to Kailua Pier at 19°38.398′ N, 155°59.816′ W, and returning along the pier to the originating point on the shoreline at to 19°38.341′ N, 155°59.782′ W. The statutory basis for this rulemaking is 46 U.S.C. 70041, which gives the coast Guard, under a delegation from the Secretary of the Department of Homeland Security regulatory authority to enforce the Ports and Waterways Safety Act.

The COTP has determined that potential safety hazards exist necessitating the movement restriction of all vessels and persons, including event participants, in the regulated area. The purpose of this rule is to ensure safety of vessels and navigable waters in the special local regulation before, during, and after the event.

IV. Discussion of Comments, Changes, and the Rule

As noted above, we received four comments on our NPRM published April 18, 2019.

The Coast Guard received three comments in support of the proposed rule, noting that additional Federal safety and security measures not only provides another layer of protection to swimmers in the water but promotes safety to all mariners in the race vicinity.

The Coast Guard received one comment regarding an adjustment to the proposed start time in the NPRM of 5:00 a.m. for both race days in October, noting that during past races, participants would encounter unfavorable swim conditions. The commenter suggested moving the 5:00 a.m. start time to 3:45 a.m., to allow waters to calm and adjust race times if necessary. Additionally, the Coast Guard would have ample time to ensure the race course is clear of vessels and other non-participants.

We agree, and the final rule includes language stating the start time for both races in October.

The Coast Guard received one notification from event sponsor that race days are subject to change from Saturdays to Sundays depending on Cruise ship operations. Cruise Ship Operations occurring in the Kailua-Kona Security Zone, 33 CFR 165.30 prohibit persons or vessels from entering without express permission of the Captain of the Port Honolulu.

We agree, and the proposed final rule includes a change in language from ''consecutive Saturdays'' to ''consecutive weekends'' to accommodate race day changes.

V. Regulatory Analyses

We developed this rule after considering numerous statutes and Executive orders related to rulemaking. Below we summarize our analyses based on a number of these statutes and Executive orders, and we discuss First Amendment rights of protestors.

A. Regulatory Planning and Review

Executive Orders 12866 and 13563 direct agencies to assess the costs and benefits of available regulatory alternatives and, if regulation is necessary, to select regulatory approaches that maximize net benefits. Executive Order 13771 directs agencies to control regulatory costs through a budgeting process. This rule has not been designated a ''significant regulatory action,'' under Executive Order 12866. Accordingly, this rule has not been reviewed by the Office of Management and Budget (OMB), and pursuant to OMB guidance it is exempt from the requirements of Executive Order 13771.

This regulatory action determination is based on the size, location, duration, event history, time of day, and time of year of the regulated area which would impact a small designated area of Kailua Bay. Vessel traffic will be able to safely transit around the event. Moreover, the Coast Guard will issue a Broadcast Notice to Mariners via VHF–FM marine channel 16 about the regulation and will promulgate a Notice of Enforcement and issue a Local Notice to Mariners each year. Finally, the rule would allow vessels to seek permission to enter the regulated area, transit around the race area, and vessel traffic would be able to safely transit the regulated area once the COTP of Honolulu's PATCOM deems it safe to do so.

B. Impact on Small Entities

The Regulatory Flexibility Act of 1980, 5 U.S.C. 601–612, as amended, requires Federal agencies to consider the potential impact of regulations on small entities during rulemaking. The term ''small entities'' comprises small businesses, not-for-profit organizations that are independently owned and operated and are not dominant in their fields, and governmental jurisdictions with populations of less than 50,000. The Coast Guard received no comments from the Small Business Administration on this rulemaking. The Coast Guard certifies under 5 U.S.C. 605(b) that this rule will not have a significant economic impact on a substantial number of small entities.

While some owners or operators of vessels intending to transit the safety zone may be small entities, for the reasons stated in section V.A above, this rule will not have a significant economic impact on any vessel owner or operator.

Under section 213(a) of the Small Business Regulatory Enforcement Fairness Act of 1996 (Pub. L. 104–121), we want to assist small entities in understanding this rule. If the rule would affect your small business, organization, or governmental jurisdiction and you have questions concerning its provisions or options for compliance, please call or email the person listed in the **FOR FURTHER INFORMATION CONTACT** section.

Small businesses may send comments on the actions of Federal employees who enforce, or otherwise determine compliance with, Federal regulations to the Small Business and Agriculture Regulatory Enforcement Ombudsman and the Regional Small Business Regulatory Fairness Boards. The Ombudsman evaluates these actions annually and rates each agency's responsiveness to small business. If you wish to comment on actions by employees of the Coast Guard, call 1–888–REG–FAIR (1–888–734–3247). The Coast Guard will not retaliate against small entities that question or complain about this rule or any policy or action of the Coast Guard.

C. Collection of Information

This rule will not call for a new collection of information under the Paperwork Reduction Act of 1995 (44 U.S.C. 3501–3520).

D. Federalism and Indian Tribal Governments

A rule has implications for federalism under Executive Order 13132, Federalism, if it has a substantial direct

effect on the States, on the relationship between the national government and the States, or on the distribution of power and responsibilities among the various levels of government. We have analyzed this rule under that Order and have determined that it is consistent with the fundamental federalism principles and preemption requirements described in Executive Order 13132.

Also, this rule does not have tribal implications under Executive Order 13175, Consultation and Coordination with Indian Tribal Governments, because it does not have a substantial direct effect on one or more Indian tribes, on the relationship between the Federal Government and Indian tribes, or on the distribution of power and responsibilities between the Federal Government and Indian tribes. If you believe this rule has implications for federalism or Indian tribes, please call or email the person listed in the **FOR FURTHER INFORMATION CONTACT** section.

E. Unfunded Mandates Reform Act

The Unfunded Mandates Reform Act of 1995 (2 U.S.C. 1531–1538) requires Federal agencies to assess the effects of their discretionary regulatory actions. In particular, the Act addresses actions that may result in the expenditure by a State, local, or tribal government, in the aggregate, or by the private sector of $100,000,000 (adjusted for inflation) or more in any one year. Though this rule will not result in such an expenditure, we do discuss the effects of this rule elsewhere in this preamble.

F. Environment

We have analyzed this rule under Department of Homeland Security Directive 023–01 and Environmental Planning COMDTINST 5090.1 (series), which guide the Coast Guard in complying with the National Environmental Policy Act of 1969 (42 U.S.C. 4321–4370f), and have determined that this action is one of a category of actions that do not individually or cumulatively have a significant effect on the human environment. This rule involves implementation of regulations within 33 CFR 100 applicable to organized marine events on the navigable waters of the United States that could negatively impact the safety of waterway users. It is categorically excluded from further review under paragraph L61 in Table 3–1 of U.S. Coast Guard Environmental Planning Implementing Procedures. A Record of Environmental Consideration supporting this determination is available in the docket where indicated under **ADDRESSES**.

G. Protest Activities

The Coast Guard respects the First Amendment rights of protesters. Protesters are asked to call or email the person listed in the **FOR FURTHER INFORMATION CONTACT** section to coordinate protest activities so that your message can be received without jeopardizing the safety or security of people, places, or vessels.

List of Subjects in 33 CFR Part 100

Marine safety, Navigation (water), Reporting and recordkeeping requirements, Waterways.

For the reasons discussed in the preamble, the Coast Guard amends 33 CFR part 100 as follows:

PART 100—SAFETY OF LIFE ON NAVIGABLE WATERS

■ 1. The authority citation for part 100 continues to read as follows:

Authority: 46 U.S.C. 70041; 33 CFR 1.05–1.

■ 2. Add § 100.1402 to read as follows:

§ 100.1402 Special Local Regulation; Kailua Bay, Ironman World Championship, Kailua-Kona, Hawaii.

(a) *Definitions.* As used in this section:

Buffer area is a neutral 100-yard area that surrounds the perimeter of the course area's navigable waters as described by this section. The purpose of a buffer area is to minimize potential collision conflicts with marine event participants and spectator vessels or nearby transiting vessels. This area provides separation between a course area and spectator viewing areas.

Captain of the Port (COTP) Honolulu means the Commander, U.S. Coast Guard Sector Honolulu or any Coast Guard commissioned, warrant or petty officer who has been authorized by the COTP to act on his behalf.

Coast Guard Patrol Commander (PATCOM) means a commissioned, warrant, or petty officer of the U.S. Coast Guard who has been designated as PATCOM by the Commander, Coast Guard Sector Honolulu.

Course area is an area described by a line bound by coordinates provided in latitude and longitude that outlines the boundary of the event swim area within the overall regulated area defined by this section.

Enforcement vessels are designated vessels authorized by the COTP Honolulu, the event PATCOM, or COTP Honolulu's designated representatives to support the safety and security of the marine event.

Official Patrol means any vessel assigned or approved by Commander, Coast Guard Sector Honolulu with a commissioned, warrant, or petty officer on board.

Participant means any persons registered with the event sponsor as participating in the Ironman Triathlon or practice swim.

Regulated area is the combined course area and buffer area.

Spectators are all persons and vessels not registered with the sponsor as participants, support vessels, or enforcement vessels.

(b) *Location.* All coordinates reference Datum NAD 1983.

(1) *Regulated area.* All navigable waters within Kailua Bay and encompasses the course area and surrounding 100-yard buffer area. This course area and 100-yard buffer area extends from the surface of the water to the ocean floor.

(2) *Course area.* The 2.24 mile (4,224 yards) swim course is a temporary marked swim course within the regulated area located in Kailua Bay.

(3) *Buffer area.* All navigable waters 100 yards outside of the perimeter of the course area, described in paragraph (c)(4) of this section.

(c) *Special local regulations.* (1) The COTP Honolulu or PATCOM may forbid and control the movement of all vessels and persons, including event participants, in the regulated area. When hailed or signaled by an official patrol, a vessel or person in the regulated area shall immediately comply with the directions given by the patrol. Failure to do so may result in the Coast Guard expelling the person or vessel from the area, issuing a citation for failure to comply, or both. The COTP Honolulu or PATCOM may terminate the event at any time the COTP Honolulu or PATCOM believes it necessary to do so for the protection of life.

(2) Except for participants and safety support vessels, a person or vessel within the regulated area at the start of enforcement of this section must immediately depart the regulated area.

(3) Support and enforcement vessels consist of any local law enforcement and sponsor provided vessels assigned or approved by the COTP Honolulu, the event PATCOM, or COTP Honolulu designated representatives, to patrol the regulated area.

(4) The regulated area consists of all navigable waters starting at the shoreline northeast of Kailua Pier at 19°38.341′ N, 155°59.782′ W; thence southeast to 19°37.416′ N, 155°59.444′ W; thence southwest to 19°37.397′ N, 155°59.500′ W; thence northwest to 19°38.150′ N, 155°59.760′ W, thence north and back to Kailua Pier at

19°38.398′ N, 155°59.816′ W, and returning along the pier to the originating point on the shoreline at to 19°38.341′ N, 155°59.782′ W.

(5) Spectators shall not enter into, anchor, block, loiter, or impede the transit of participants or support/enforcement vessels in the regulated area during the enforcement of this section, unless cleared for entry by the COTP Honolulu, the event PATCOM, or the COTP's designated representatives.

(6) Persons desiring to transit the regulated area identified may contact the COTP Honolulu in advance at the Sector Honolulu Command Center telephone number (808) 842–2600 and (808) 842–2601 or immediately prior to or during the event to the COTP Honolulu's PATCOM or designated representative on VHF–FM marine channel 16 (156.8 Mhz) to seek permission to transit or remain in the area. If permission is granted, all persons and vessels must comply with the instructions of the COTP Honolulu, the event PATCOM, or the COTP's designated representative and proceed at the minimum speed necessary to maintain a safe course while in the area.

(7) If enforcement of the regulated area is no longer necessary, the COTP Honolulu, event Patrol Commander, or COTP designated representative will inform the public through radio broadcasts that the regulated area is no longer being enforced.

(d) *Enforcement officials.* The Coast Guard may be assisted with event patrol and enforcement of the regulated area by other Federal, State, and local agencies.

(e) *Enforcement period.* The marine event and special local regulation in this section will be enforced from 3:45 a.m. to 11 a.m. on the first two weekends in October annually. The Coast Guard will publish a notice in the Fourteenth Coast Guard District Local Notice to Mariners, a Notice of the Enforcement in the **Federal Register**, and issue a marine information broadcast on VHF–FM marine band radio on channel 16 announcing specific event date and times.

Dated: September 18, 2019.

A.B. Avanni,

Captain, U.S. Coast Guard, Captain of the Port Honolulu.

[FR Doc. 2019–20627 Filed 9–27–19; 8:45 am]

BILLING CODE 9110–04–P

DEPARTMENT OF HOMELAND SECURITY

Coast Guard

33 CFR Part 165

[Docket Number USCG–2019–0804]

RIN 1625–AA00

Safety Zone; Grand Haven Fireworks, Lake Michigan, Grand Haven, MI

AGENCY: Coast Guard, DHS.

ACTION: Temporary final rule.

SUMMARY: The Coast Guard is establishing a temporary safety zone for navigable waters of Lake Michigan and the Grand River in Grand Haven, MI. The safety zone is needed to protect personnel, vessels, and the marine environment from potential hazards created by a fireworks display. Entry of vessels or persons into this zone is prohibited unless specifically authorized by the Captain of the Port Lake Michigan (COTP).

DATES: This rule is effective from 7:30 p.m. on September 30, 2019, through 9:30 p.m. on October 1, 2019.

ADDRESSES: To view documents mentioned in this preamble as being available in the docket, go to *https://www.regulations.gov,* type USCG–2019–0804 in the ''SEARCH'' box and click ''SEARCH.'' Click on Open Docket Folder on the line associated with this rule.

FOR FURTHER INFORMATION CONTACT: If you have questions on this rule, call or email Chief Petty Officer Kyle Weitzell, U.S. Coast Guard; telephone 414–747–7148, email *Kyle.W.Weitzell@uscg.mil.*

SUPPLEMENTARY INFORMATION:

I. Table of Abbreviations

CFR Code of Federal Regulations
DHS Department of Homeland Security
FR Federal Register
NPRM Notice of proposed rulemaking
§ Section
U.S.C. United States Code

II. Background Information and Regulatory History

The Coast Guard is issuing this temporary rule without prior notice and opportunity to comment pursuant to authority under section 4(a) of the Administrative Procedure Act (APA) (5 U.S.C. 553(b)). This provision authorizes an agency to issue a rule without prior notice and opportunity to comment when the agency for good cause finds that those procedures are ''impracticable, unnecessary, or contrary to the public interest.'' Under 5 U.S.C. 553(b)(B), the Coast Guard finds that good cause exists for not publishing a notice of proposed rulemaking (NPRM) with respect to this rule because the COTP received notice of the fireworks display on September 4, 2019 and final details on September 12, 2019. Delaying the effective date of this rule to wait for a comment period to run would be impracticable and contrary to the public interest by inhibiting the Coast Guard's ability to protect the public, mariners, spectators, and vessels on September 30, 2019.

Under 5 U.S.C. 553(d)(3), the Coast Guard finds that good cause exists for making this rule effective less than 30 days after publication in the **Federal Register**. For the reasons discussed in the preceding paragraph, delaying the effective date of this rule would be impracticable because immediate action is needed to respond to the potential safety hazards associated with a fireworks display scheduled for September 30, 2019, with a backup date established for October 1, 2019.

III. Legal Authority and Need for Rule

The Coast Guard is issuing this rule under authority in 46 U.S.C. 70034 (previously 33 U.S.C. 1231). The COTP has determined that potential hazards associated with a fireworks display scheduled for September 30, 2019, with a backup date established for October 1, 2019, will be a safety concern for anyone within a 300 foot radius of the fireworks launch site that is in close proximity to Lake Michigan and the Grand River in Grand Haven, MI. This rule is needed to protect personnel, vessels, and the marine environment in the navigable waters within the safety zone immediately before, during, and following the fireworks display.

IV. Discussion of the Rule

This rule establishes a safety zone that will be enforced from 7:30 p.m. through 9:30 p.m. on September 30, 2019, with a rain date of 7:30 p.m. through 9:30 p.m. on October 1, 2019. The safety zone will cover all navigable waters of Lake Michigan and the Grand River within 300 feet of the fireworks launch site at coordinates 43°03.240′ N, 086°15.360′ W.

The duration of the zone is intended to protect personnel, vessels, and the marine environment in these navigable waters from falling embers and fireworks debris associated with the fireworks display. Entry into, transiting, or anchoring within the safety zone is prohibited unless authorized by the COTP or a designated on-scene representative. The COTP or a designated on-scene representative may be contacted via VHF Channel 16.

V. Regulatory Analyses

We developed this rule after considering numerous statutes and Executive orders related to rulemaking. Below we summarize our analyses based on a number of these statutes and Executive orders, and we discuss First Amendment rights of protestors.

A. Regulatory Planning and Review

Executive Orders 12866 and 13563 direct agencies to assess the costs and benefits of available regulatory alternatives and, if regulation is necessary, to select regulatory approaches that maximize net benefits. Executive Order 13771 directs agencies to control regulatory costs through a budgeting process. This rule has not been designated a ''significant regulatory action,'' under Executive Order 12866. Accordingly, this rule has not been reviewed by the Office of Management and Budget (OMB), and pursuant to OMB guidance it is exempt from the requirements of Executive Order 13771.

This regulatory action determination is based on the characteristics of the safety zone. The safety zone created by this rule will be relatively small and is designed to minimize its impact on navigable waters. This rule will prohibit entry into certain navigable waters of Lake Michigan and the Grand River, Grand Haven, MI not to exceed two hours in duration. Thus, restrictions on vessel movement within that particular area are expected to be minimal. Under certain conditions, moreover, vessels may still transit through the safety zone when permitted by the COTP.

B. Impact on Small Entities

The Regulatory Flexibility Act of 1980, 5 U.S.C. 601–612, as amended, requires Federal agencies to consider the potential impact of regulations on small entities during rulemaking. The term ''small entities'' comprises small businesses, not-for-profit organizations that are independently owned and operated and are not dominant in their fields, and governmental jurisdictions with populations of less than 50,000. The Coast Guard certifies under 5 U.S.C. 605(b) that this rule will not have a significant economic impact on a substantial number of small entities.

While some owners or operators of vessels intending to transit the safety zone may be small entities, for the reasons stated in section V.A above, this rule will not have a significant economic impact on any vessel owner or operator.

Under section 213(a) of the Small Business Regulatory Enforcement Fairness Act of 1996 (Pub. L. 104–121), we want to assist small entities in understanding this rule. If the rule would affect your small business, organization, or governmental jurisdiction and you have questions concerning its provisions or options for compliance, please call or email the person listed in the **FOR FURTHER INFORMATION CONTACT** section.

Small businesses may send comments on the actions of Federal employees who enforce, or otherwise determine compliance with, Federal regulations to the Small Business and Agriculture Regulatory Enforcement Ombudsman and the Regional Small Business Regulatory Fairness Boards. The Ombudsman evaluates these actions annually and rates each agency's responsiveness to small business. If you wish to comment on actions by employees of the Coast Guard, call 1–888–REG–FAIR (1–888–734–3247). The Coast Guard will not retaliate against small entities that question or complain about this rule or any policy or action of the Coast Guard.

C. Collection of Information

This rule will not call for a new collection of information under the Paperwork Reduction Act of 1995 (44 U.S.C. 3501–3520).

D. Federalism and Indian Tribal Governments

A rule has implications for federalism under Executive Order 13132, Federalism, if it has a substantial direct effect on the States, on the relationship between the national government and the States, or on the distribution of power and responsibilities among the various levels of government. We have analyzed this rule under that Order and have determined that it is consistent with the fundamental federalism principles and preemption requirements described in Executive Order 13132.

Also, this rule does not have tribal implications under Executive Order 13175, Consultation and Coordination with Indian Tribal Governments, because it does not have a substantial direct effect on one or more Indian tribes, on the relationship between the Federal Government and Indian tribes, or on the distribution of power and responsibilities between the Federal Government and Indian tribes. If you believe this rule has implications for federalism or Indian tribes, please call or email the person listed in the **FOR FURTHER INFORMATION CONTACT** section above.

E. Unfunded Mandates Reform Act

The Unfunded Mandates Reform Act of 1995 (2 U.S.C. 1531–1538) requires Federal agencies to assess the effects of their discretionary regulatory actions. In particular, the Act addresses actions that may result in the expenditure by a State, local, or tribal government, in the aggregate, or by the private sector of $100,000,000 (adjusted for inflation) or more in any one year. Though this rule will not result in such an expenditure, we do discuss the effects of this rule elsewhere in this preamble.

F. Environment

We have analyzed this rule under Department of Homeland Security Directive 023–01 and Environmental Planning COMDTINST 5090.1 (series), which guide the Coast Guard in complying with the National Environmental Policy Act of 1969 (42 U.S.C. 4321–4370f), and have determined that this action is one of a category of actions that do not individually or cumulatively have a significant effect on the human environment. This rule involves a safety zone lasting not more than 2 hours that will prohibit entry within 300 feet of a fireworks launch site along Lake Michigan and the Grand River in Grand Haven, MI. It is categorically excluded from further review under paragraph L60(a) in Table 3–1 of U.S. Coast Guard Environmental Planning Implementing Procedures 5090.1. A Record of Environmental Consideration supporting this determination will be available in the docket where indicated under **ADDRESSES** once it has been completed.

G. Protest Activities

The Coast Guard respects the First Amendment rights of protesters. Protesters are asked to call or email the person listed in the **FOR FURTHER INFORMATION CONTACT** section to coordinate protest activities so that your message can be received without jeopardizing the safety or security of people, places or vessels.

List of Subjects in 33 CFR Part 165

Harbors, Marine safety, Navigation (water), Reporting and recordkeeping requirements, Security measures, Waterways.

For the reasons discussed in the preamble, the Coast Guard amends 33 CFR part 165 as follows:

PART 165—REGULATED NAVIGATION AREAS AND LIMITED ACCESS AREAS

■ 1. The authority citation for part 165 continues to read as follows:

Authority: 46 U.S.C. 70034, 70051; 33 CFR 1.05–1, 6.04–1, 6.04–6, and 160.5; Department of Homeland Security Delegation No. 0170.1.

■ 2. Add § 165.T09–0804 to read as follows:

§ 165.T09–0804 Safety Zone; Grand Haven Fireworks, Lake Michigan, Grand Haven, MI.

(a) *Location.* All navigable waters of Lake Michigan and the Grand River in Grand Haven, MI within 300 feet of a fireworks launch site at coordinates 43°03.240′ N, 086°15.360′ W.

(b) *Enforcement period.* The regulated area described in paragraph (a) will be enforced from 7:30 p.m. through 9:30 p.m. on September 30, 2019 with a rain date of 7:30 p.m. through 9:30 p.m. on October 1, 2019.

(c) *Regulations.* (1) In accordance with the general regulations in section § 165.23, entry into, transiting, or anchoring within this safety zone is prohibited unless authorized by the Captain of the Port Lake Michigan or a designated on-scene representative.

(2) This safety zone is closed to all vessel traffic, except as may be permitted by the Captain of the Port Lake Michigan or a designated on-scene representative.

(3) The ''on-scene representative'' of the Captain of the Port Lake Michigan is any Coast Guard commissioned, warrant or petty officer who has been designated by the Captain of the Port Lake Michigan to act on his or her behalf.

(4) Vessel operators desiring to enter or operate within the safety zone must contact the Captain of the Port Lake Michigan or an on-scene representative to obtain permission to do so. The Captain of the Port Lake Michigan or an on-scene representative may be contacted via VHF Channel 16. Vessel operators given permission to enter or operate in the safety zone must comply with all directions given to them by the Captain of the Port Lake Michigan or an on-scene representative.

Dated: September 23, 2019.

L.M. Lusk,

Commander, U.S. Coast Guard, Acting Captain of the Port Sector Lake Michigan.

[FR Doc. 2019–21053 Filed 9–27–19; 8:45 am]

BILLING CODE 9110–04–P

DEPARTMENT OF HOMELAND SECURITY

Coast Guard

33 CFR Part 165

[Docket Number USCG–2019–0757]

RIN 1625–AA00

Safety Zone; Leif Erickson Day Row and Run, Charlevoix, MI

AGENCY: Coast Guard, DHS.

ACTION: Temporary final rule.

SUMMARY: The Coast Guard is establishing a temporary safety zone in Lake Charlevoix, Charlevoix, MI. This temporary safety zone is needed to protect 40 participating paddlers in the Leif Erickson Day Row and Run. Entry of vessels or persons into this zone is prohibited unless specifically authorized by the Captain of the Port Sector Sault Sainte Marie or a designated representative.

DATES: This rule is effective from 9:00 a.m. to 12:00 p.m., October 5, 2019.

ADDRESSES: To view documents mentioned in this preamble as being available in the docket, go to *https://www.regulations.gov,* type USCG–2019–0757 in the ''SEARCH'' box and click ''SEARCH.'' Click on Open Docket Folder on the line associated with this rule.

FOR FURTHER INFORMATION CONTACT: If you have questions on this rule, call or email MST2 Onnalee A. Blackledge, Waterways Management, Coast Guard Sector Sault Sainte Marie, U.S. Coast Guard; telephone 906–253–2443, email *ssmprevention@uscg.mil.*

SUPPLEMENTARY INFORMATION:

I. Table of Abbreviations

CFR Code of Federal Regulations
COTP Captain of the Port
DHS Department of Homeland Security
FR Federal Register
NPRM Notice of proposed rulemaking
§ Section
U.S.C. United States Code

II. Background, Purpose, and Legal Basis

The Coast Guard is issuing this temporary rule without prior notice and opportunity to comment pursuant to authority under section 4(a) of the Administrative Procedure Act (APA) (5 U.S.C. 553(b)). This provision authorizes an agency to issue a rule without prior notice and opportunity to comment when the agency for good cause finds that those procedures are ''impracticable, unnecessary, or contrary to the public interest.'' Under 5 U.S.C. 553(b)(B), the Coast Guard finds that good cause exists for not publishing a notice of proposed rulemaking (NPRM) with respect to this rule because doing so would be impracticable. The Coast Guard did not receive the final details of the requested safety zone with sufficient time for a comment period to run before the start of the event. Thus, delaying this rule to wait for a notice and comment period to run would be impracticable because it would inhibit the Coast Guard's ability to protect the 40 participants from the boating public.

Under 5 U.S.C. 553(d)(3), the Coast Guard finds that good cause exists for making this rule effective less than 30 days after publication in the **Federal Register**. For the same reasons discussed in the preceding paragraph, a 30-day notice period would be impracticable.

III. Legal Authority and Need for Rule

The Coast Guard is issuing this rule under authority in 46 U.S.C. 70034 (previously 33 U.S.C. 1231). The Captain of the Sault Sainte Marie (COTP) has determined that potential hazards exist while 40 participants associated with the Leif Erickson Day Row and Run paddle in a highly congested area of boating traffic between 9:00 a.m. through 12:00 p.m. on October 5, 2019. This rule is needed to protect the 40 participants of the Leif Erickson Day Row and Run event.

IV. Discussion of the Rule

This rule establishes a temporary safety zone from 9:00 a.m. through 12:00 p.m. on October 5, 2019. The course will be in Charlevoix, MI on Lake Charlevoix beginning at Depot Beach and finishing at Ferry Beach.

The Captain of the Port Sault Sainte Marie has determined that there are potential hazards associated with this marine event and the following temporary safety zone is needed: beginning at the paddle coral located at Depot Beach Park and finishing at Ferry Beach Park, all navigable waters within 200 yards of a line drawn between beginning point of 045°19′08.9″ N 085°14′28.4″ W, to the finishing point of 045°18′10.4″ N 085°14′50.4″ W. This rule establishes a temporary safety zone from 9 a.m. until 12 p.m. on October 5, 2019. The duration of the zone is intended to protect the 40 participants in the navigable waters in the area of the paddle course of the Leif Erickson Day Row and Run event. No vessel or person will be permitted to enter the safety zone without obtaining permission from the COTP or a designated representative.

V. Regulatory Analyses

We developed this rule after considering numerous statutes and Executive orders related to rulemaking. Below we summarize our analyses based on a number of these statutes and Executive orders, and we discuss First Amendment rights of protestors.

A. Regulatory Planning and Review

Executive Orders 12866 and 13563 direct agencies to assess the costs and benefits of available regulatory alternatives and, if regulation is necessary, to select regulatory approaches that maximize net benefits. Executive Order 13771 directs agencies to control regulatory costs through a budgeting process. This rule has not been designated a ''significant regulatory action,'' under Executive Order 12866. Accordingly, this rule has not been reviewed by the Office of Management and Budget (OMB), and pursuant to OMB guidance, it is exempt from the requirements of Executive Order 13771.

This regulatory action determination is based on the size, location, duration, and time-of-day for this temporary safety zone. Vessel traffic will be able to safely transit around this safety zone which will impact a small-designated area of Lake Charlevoix near Depot and Ferry beach, Charlevoix, MI. Moreover, the Coast Guard will issue a Broadcast Notice to Mariners via VHF–FM marine channel 16 about the zone and the rule allows vessels to seek permission to enter the zone.

B. Impact on Small Entities

The Regulatory Flexibility Act of 1980, 5 U.S.C. 601–612, as amended, requires Federal agencies to consider the potential impact of regulations on small entities during rulemaking. The term ''small entities'' comprises small businesses, not-for-profit organizations that are independently owned and operated and are not dominant in their fields, and governmental jurisdictions with populations of less than 50,000. The Coast Guard certifies under 5 U.S.C. 605(b) that this rule will not have a significant economic impact on a substantial number of small entities.

While some owners or operators of vessels intending to transit the safety zone may be small entities, for the reasons stated in section V.A above, this rule will not have a significant economic impact on any vessel owner or operator.

Under section 213(a) of the Small Business Regulatory Enforcement Fairness Act of 1996 (Pub. L. 104–121), we want to assist small entities in understanding this rule. If the rule would affect your small business, organization, or governmental jurisdiction and you have questions concerning its provisions or options for compliance, please contact the person listed in the **FOR FURTHER INFORMATION CONTACT** section.

Small businesses may send comments on the actions of Federal employees who enforce, or otherwise determine compliance with, Federal regulations to the Small Business and Agriculture Regulatory Enforcement Ombudsman and the Regional Small Business Regulatory Fairness Boards. The Ombudsman evaluates these actions annually and rates each agency's responsiveness to small business. If you wish to comment on actions by employees of the Coast Guard, call 1–888–REG–FAIR (1–888–734–3247). The Coast Guard will not retaliate against small entities that question or complain about this rule or any policy or action of the Coast Guard.

C. Collection of Information

This rule will not call for a new collection of information under the Paperwork Reduction Act of 1995 (44 U.S.C. 3501–3520).

D. Federalism and Indian Tribal Governments

A rule has implications for federalism under Executive Order 13132, Federalism, if it has a substantial direct effect on the States, on the relationship between the national government and the States, or on the distribution of power and responsibilities among the various levels of government. We have analyzed this rule under that Order and have determined that it is consistent with the fundamental federalism principles and preemption requirements described in Executive Order 13132.

Also, this rule does not have tribal implications under Executive Order 13175, Consultation and Coordination with Indian Tribal Governments, because it does not have a substantial direct effect on one or more Indian tribes, on the relationship between the Federal Government and Indian tribes, or on the distribution of power and responsibilities between the Federal Government and Indian tribes. If you believe this rule has implications for federalism or Indian tribes, please contact the person listed in the **FOR FURTHER INFORMATION CONTACT** section above.

E. Unfunded Mandates Reform Act

The Unfunded Mandates Reform Act of 1995 (2 U.S.C. 1531–1538) requires Federal agencies to assess the effects of their discretionary regulatory actions. In particular, the Act addresses actions that may result in the expenditure by a State, local, or tribal government, in the aggregate, or by the private sector of $100,000,000 (adjusted for inflation) or more in any one year. Though this rule will not result in such an expenditure, we do discuss the effects of this rule elsewhere in this preamble.

F. Environment

We have analyzed this rule under Department of Homeland Security Directive 023–01 and Environmental Planning COMDTINST 5090.1 (series), which guide the Coast Guard in complying with the National Environmental Policy Act of 1969 (42 U.S.C. 4321–4370f), and have determined that this action is one of a category of actions that do not individually or cumulatively have a significant effect on the human environment. This rule involves a temporary safety zone lasting 3 hours that will prohibit entry into a designated area. Normally such actions are categorically excluded from further review under paragraph L [60] a in Table 3–1 of U.S. Coast Guard Environmental Planning Implementing Procedures 5090.1. A Record of Environmental Consideration supporting this determination is available in the docket where indicated under **ADDRESSES**.

G. Protest Activities

The Coast Guard respects the First Amendment rights of protesters. Protesters are asked to contact the person listed in the **FOR FURTHER INFORMATION CONTACT** section to coordinate protest activities so that your message can be received without jeopardizing the safety or security of people, places or vessels.

List of Subjects in 33 CFR Part 165

Harbors, Marine safety, Navigation (water), Reporting and record keeping requirements, Security measures, Waterways.

For the reasons discussed in the preamble, the Coast Guard amends 33 CFR part 165 as follows:

PART 165—REGULATED NAVIGATION AREAS AND LIMITED ACCESS AREAS

■ 1. The authority citation for part 165 continues to read as follows:

Authority: 46 U.S.C. 70034, 70051; 33 CFR 1.05–1, 6.04–1, 6.04–6, and 160.5; Department of Homeland Security Delegation No. 0170.1.

■ 2. Add § 165.T09–0757 to read as follows:

§ 165.T09–0757 Safety Zone; Leif Erickson Day Row and Run, Charlevoix, MI.

(a) *Location.* The following area is a temporary safety zone: beginning at the paddle coral located at Depot Beach Park and finishing at Ferry Beach Park, all navigable waters within 200 yards of a line drawn between beginning point of 045°19′08.9″ N 085°14′28.4″ W, to the finishing point of 045°18′10.4″ N 085°14′50.4″ W

(b) *Effective and enforcement period.* This section is effective and will be enforced on October 5, 2019 from 9:00 a.m. through 12:00 p.m.

(c) *Regulations.* (1) In accordance with the general regulations in § 165.23, entry into, transiting, or anchoring within this temporary safety zone is prohibited unless authorized by the Captain of the Port, Sault Sainte Marie or his or her on-scene representative.

(2) This temporary safety zone is closed to all vessel traffic, except as may be permitted by the Captain of the Port, Sault Sainte Marie or his on-scene representative.

(3) The ''on-scene representative'' of the Captain of the Port, Sault Sainte Marie is any Coast Guard commissioned, warrant or petty officer who has been designated by the Captain of the Port Sault Sainte Marie to act on his or her behalf. The on-scene representative of the Captain of the Port Sault Sainte Marie will be aboard a Coast Guard vessel.

(4) Vessel Operators desiring to enter or operate within the temporary safety zone shall contact the Captain of the Port Sault Sainte Marie, or his on-scene representative to obtain permission to do so. The Captain of the Port Sault Sainte Marie or his or her on-scene representative may be contacted via VHF Channel 16 or at (906) 635–3319. Vessel operators given permission to enter or operate in the temporary safety zone must comply with all directions given to them by the Captain of the Port Sault Sainte Marie or his or her on-scene representative.

Dated: September 17, 2019.

P.S. Nelson,

Captain, U. S. Coast Guard, Captain of the Port Sault Sainte Marie.

[FR Doc. 2019–20727 Filed 9–27–19; 8:45 am]

BILLING CODE 9110–04–P

DEPARTMENT OF HOMELAND SECURITY

Coast Guard

33 CFR Part 165

[Docket Number USCG–2019–0758]

RIN 1625–AA00

Safety Zone; Mackinaw City Fall Colors Fireworks, Mackinaw City, MI

AGENCY: Coast Guard, DHS.

ACTION: Temporary final rule.

SUMMARY: The Coast Guard is establishing a temporary safety zone in the Straits of Mackinac near Mackinac City, MI. The temporary safety zone is needed to protect vessels and spectators from the hazards associated with a fireworks show during the Mackinaw City Fall Colors Fireworks. Entry of vessels or persons into this zone is prohibited unless specifically authorized by the Captain of the Port Sector Sault Sainte Marie or a designated representative.

DATES: This rule is effective from 8:00 p.m. on October 4, 2019 through 10:00 p.m. on October 12, 2019.

ADDRESSES: To view documents mentioned in this preamble as being available in the docket, go to *http://www.regulations.gov,* type USCG–2019–0758 in the ''SEARCH'' box and click ''SEARCH.'' Click on Open Docket Folder on the line associated with this rule.

FOR FURTHER INFORMATION CONTACT: If you have questions on this rule, call or email MST2 Onnalee A. Blackledge, Waterways Management, Coast Guard Sector Sault Sainte Marie, U.S. Coast Guard; telephone 906–253–2443, email *sssmprevention@uscg.mil.*

SUPPLEMENTARY INFORMATION:

I. Table of Abbreviations

CFR Code of Federal Regulations
COTP Captain of the Port
DHS Department of Homeland Security
FR Federal Register
NPRM Notice of proposed rulemaking
§ Section
U.S.C. United States Code

II. Background, Purpose, and Legal Basis

The Coast Guard is issuing this temporary rule without prior notice and opportunity to comment pursuant to authority under section 4(a) of the Administrative Procedure Act (APA) (5 U.S.C. 553(b)). This provision authorizes an agency to issue a rule without prior notice and opportunity to comment when the agency, for good cause, finds that those procedures are ''impracticable, unnecessary, or contrary to the public interest.'' Under 5 U.S.C. 553(b)(B), the Coast Guard finds that good cause exists for not publishing a notice of proposed rulemaking (NPRM) with respect to this rule because doing so would be impracticable. The Coast Guard did not receive the final details of the requested safety zone with sufficient time for a comment period to run before the start of the fireworks display. Thus, delaying this rule to wait for a notice and comment period to run would be impracticable because it would inhibit the Coast Guard's ability to protect the public from the potential hazards associated with the fireworks display.

Under 5 U.S.C. 553(d)(3), the Coast Guard finds that good cause exists for making this rule effective less than 30 days after publication in the **Federal Register**. For the same reasons discussed in the preceding paragraph, a 30-day notice period would be impracticable.

III. Legal Authority and Need for Rule

The legal basis for this final rulemaking is found at 46 U.S.C 70034; 33 CFR 1.05–1, 6.04–1, 6.04–6, and 160.5; Department of Homeland Security Delegation No. 0170.1.

On October 4, 2019 and October 11, 2019 from 8:00 p.m. through 10:00 p.m., Mackinaw City will have a fireworks display at position 45°46′28.5″ N, 084°43′12.0″ W (NAD 83). Alternative rain dates will be October 5, 2019 and October 12, 2019 and enforced from 8:00 p.m. to 10:00 p.m. on those days. The maximum sized shell to be used is six inches and requires a temporary safety zone of at least 420 feet. The State of Michigan regulates fireworks displays. This action is only for the temporary safety zone.

The Captain of the Port Sault Sainte Marie has determined that potential hazard associated with these fireworks will be a safety concern to anyone within a 420-foot radius of the launch site. Such hazards include premature and accidental detonations, falling and burning debris, and collisions among spectator vessels. This rule is needed to protect personnel, vessels, and the marine environment in the navigable waters within the temporary safety zone while the fireworks are being displayed.

IV. Discussion of the Rule

This rule establishes a temporary safety zone from 8:00 p.m. through 10:00 p.m. on October 4, 2019 and October 11, 2019. Alternative rain dates will be October 5, 2019 and October 12, 2019 and enforced from 8:00 p.m. to

10:00 p.m. on those days. This rule is necessary to protect the safety of spectators and vessels during the aforementioned display. The temporary safety zone will encompass all U.S. waters of Lake Huron within a 420 feet radius from 45°46′28.5″ N, 084°43′12.0″ W (NAD83). The rule will be enforced to mitigate risks associated with the display.

The duration of the zone is intended to protect the safety of life and property in these navigable waters during the scheduled fireworks display. No vessel or person will be permitted to enter the temporary safety zone without obtaining permission from the Captain of the Port or a designated representative. The Captain of the Port or a designated representative may be contacted via VHF Channel 16 or at 906–635–3237.

V. Regulatory Analyses

We developed this rule after considering numerous statutes and Executive orders related to rulemaking. Below we summarize our analyses based on a number of these statutes and Executive orders, and we discuss First Amendment rights of protestors.

A. Regulatory Planning and Review

Executive Orders 12866 and 13563 direct agencies to assess the costs and benefits of available regulatory alternatives and, if regulation is necessary, to select regulatory approaches that maximize net benefits. Executive Order 13771 directs agencies to control regulatory costs through a budgeting process. This rule has not been designated a ''significant regulatory action,'' under Executive Order 12866. Accordingly, this rule has not been reviewed by the Office of Management and Budget (OMB), and pursuant to OMB guidance, it is exempt from the requirements of Executive Order 13771.

This regulatory action determination is based on the size, location, duration, and time-of-day for this temporary safety zone. Vessel traffic will be able to safely transit around this safety zone which will impact a small-designated area of Lake Huron near Mackinac City for two hours on two days. Moreover, the Coast Guard will issue Broadcast Notice to Mariners via VHF–FM marine channel 16 about the zone and the rule allows vessels to seek permission to enter the zone.

B. Impact on Small Entities

The Regulatory Flexibility Act of 1980, 5 U.S.C. 601–612, as amended, requires Federal agencies to consider the potential impact of regulations on small entities during rulemaking. The term ''small entities'' comprises small businesses, not-for-profit organizations that are independently owned and operated and are not dominant in their fields, and governmental jurisdictions with populations of less than 50,000. The Coast Guard certifies under 5 U.S.C. 605(b) that this rule will not have a significant economic impact on a substantial number of small entities.

While some owners or operators of vessels intending to transit the temporary safety zone may be small entities, for the reasons stated in section V.A above, this rule will not have a significant economic impact on any vessel owner or operator.

Under section 213(a) of the Small Business Regulatory Enforcement Fairness Act of 1996 (Pub. L. 104–121), we want to assist small entities in understanding this rule. If the rule would affect your small business, organization, or governmental jurisdiction and you have questions concerning its provisions or options for compliance, please contact the person listed in the **FOR FURTHER INFORMATION CONTACT** section.

Small businesses may send comments on the actions of Federal employees who enforce, or otherwise determine compliance with, Federal regulations to the Small Business and Agriculture Regulatory Enforcement Ombudsman and the Regional Small Business Regulatory Fairness Boards. The Ombudsman evaluates these actions annually and rates each agency's responsiveness to small business. If you wish to comment on actions by employees of the Coast Guard, call 1–888–REG–FAIR (1–888–734–3247). The Coast Guard will not retaliate against small entities that question or complain about this rule or any policy or action of the Coast Guard.

C. Collection of Information

This rule will not call for a new collection of information under the Paperwork Reduction Act of 1995 (44 U.S.C. 3501–3520).

D. Federalism and Indian Tribal Governments

A rule has implications for federalism under Executive Order 13132, Federalism, if it has a substantial direct effect on the States, on the relationship between the national government and the States, or on the distribution of power and responsibilities among the various levels of government. We have analyzed this rule under that Order and have determined that it is consistent with the fundamental federalism principles and preemption requirements described in Executive Order 13132.

Also, this rule does not have tribal implications under Executive Order 13175, Consultation and Coordination with Indian Tribal Governments, because it would not have a substantial direct effect on one or more Indian tribes, on the relationship between the Federal Government and Indian tribes, or on the distribution of power and responsibilities between the Federal Government and Indian tribes. If you believe this rule has implications for federalism or Indian tribes, please contact the person listed in the **FOR FURTHER INFORMATION CONTACT** section.

E. Unfunded Mandates Reform Act

The Unfunded Mandates Reform Act of 1995 (2 U.S.C. 1531–1538) requires Federal agencies to assess the effects of their discretionary regulatory actions. In particular, the Act addresses actions that may result in the expenditure by a State, local, or tribal government, in the aggregate, or by the private sector of $100,000,000 (adjusted for inflation) or more in any one year. Though this rule will not result in such an expenditure, we do discuss the effects of this rule elsewhere in this preamble.

F. Environment

We have analyzed this rule under Department of Homeland Security Management Directive 023–01 and Environmental Planning COMDTINST 5090.1 (series), which guide the Coast Guard in complying with the National Environmental Policy Act of 1969 (42 U.S.C. 4321–4370f), and determined that this action is one of a category of actions that do not individually or cumulatively have a significant effect on the human environment. This rule involves a temporary safety zone lasting two hours that will prohibit entry into a designated area. Normally such actions are categorically excluded from further review under paragraph L60(a) in Table 3–1 of U.S. Coast Guard Environmental Planning Implementing Procedures 5090.1. A Record of Environmental Consideration supporting this determination is available in the docket where indicated under **ADDRESSES**.

G. Protest Activities

The Coast Guard respects the First Amendment rights of protesters. Protesters are asked to contact the person listed in the **FOR FURTHER INFORMATION CONTACT** section to coordinate protest activities so that your message can be received without jeopardizing the safety or security of people, places or vessels.

List of Subjects in 33 CFR Part 165

Harbors, Marine safety, Navigation (water), Reporting and record keeping requirements, Security measures, Waterways.

For the reasons discussed in the preamble, the Coast Guard amends 33 CFR part 165 as follows:

PART 165—REGULATED NAVIGATION AREAS AND LIMITED ACCESS AREAS

■ 1. The authority citation for part 165 continues to read as follows:

Authority: 46 U.S.C. 70034, 70051; 33 CFR 1.05–1, 6.04–1, 6.04–6, and 160.5; Department of Homeland Security Delegation No. 0170.1.

■ 2. Add § 165.T09–0758 to read as follows:

§ 165.T09–0758 Safety Zone; Mackinaw City Fall Colors Fireworks, Mackinaw City, MI.

(a) *Location.* The temporary safety zone will encompass all U.S. navigable waters of Lake Huron within a 420-foot radius of 45°46′28.5″ N, 084°43′12.0″ W (NAD 83).

(b) *Enforcement period.* This section will be enforced on October 4, 2019 and October 11, 2019 from 8:00 p.m. through 10:00 p.m. Alternative rain dates will be October 5, 2019 and October 12, 2019 and enforced from 8:00 p.m. to 10:00 p.m. on those dates.

(c) *Regulations.* (1) In accordance with the general regulations in § 165.23, entry into, transiting, or anchoring within this temporary safety zone is prohibited unless authorized by the Captain of the Port Sault Sainte Marie or an on-scene representative.

(2) This temporary safety zone is closed to all vessel traffic, except as may be permitted by the Captain of the Port Sault Sainte Marie or an on-scene representative.

(3) The ''on-scene representative'' of the Captain of the Port Sault Sainte Marie is any Coast Guard commissioned, warrant or petty officer who has been designated by the Captain of the Port Sault Sainte Marie to act on his or her behalf. The on-scene representative of the Captain of the Port Sault Sainte Marie will be aboard a Coast Guard vessel.

(4) Vessel Operators desiring to enter or operate within the temporary safety zone shall contact the Captain of the Port Sault Sainte Marie, or an on-scene representative to obtain permission to do so. The Captain of the Port Sault Sainte Marie or his on-scene representative may be contacted via VHF Channel 16 or at (906) 635–3237. Vessel operators given permission to enter or operate in the temporary safety zone must comply with all directions given to them by the Captain of the Port, Sault Sainte Marie or his on-scene representative.

Dated: September 17, 2019.

P.S. Nelson,

Captain, U.S. Coast Guard, Captain of the Port Sault Sainte Marie.

[FR Doc. 2019–20735 Filed 9–27–19; 8:45 am]

BILLING CODE 9110–04–P

DEPARTMENT OF HOMELAND SECURITY

Coast Guard

33 CFR Part 165

[Docket Number USCG–2019–0794]

RIN 1625–AA00

Safety Zone, Saint Simons Sound, GA

AGENCY: Coast Guard, DHS.

ACTION: Temporary final rule.

SUMMARY: On September 08, 2019, the Captain of the Port (COTP) Savannah issued an Emergency Safety Zone in response to the grounding/capsizing of the M/V GOLDEN RAY (31°07′39.66 North, 081°24′10.58 West, between Saint Simons Lighthouse and the north end of Jekyll Island, in the vicinity of green buoy #19). This Emergency Safety Zone prohibited all vessels from approaching within 0.5 nautical miles of M/V GOLDEN RAY, unless authorized by the COTP. As of September 13, 2019, this Emergency Safety Zone remained in effect for all vessels of 500 GT and above. No vessels 500 GT and above were able to transit within 0.5 nautical miles of the M/V GOLDEN RAY unless specifically authorized by the COTP. For all other vessels, the Emergency Safety Zone was enforced for 150 yards surrounding the site. No vessel could transit within 150 yards of the M/V GOLDEN RAY unless specifically authorized by the COTP. As of September 19, 2019, USCG Captain of the Port Savannah has adjusted the safety zone surrounding the M/V GOLDEN RAY, so that no vessel is authorized access within 150 yards of the M/V GOLDEN RAY, unless authorized by the Captain of the Port. The previous safety zone established on September 12, 2019 is terminated.

DATES: This rule is effective without actual notice from September 30, 2019 until no longer deemed necessary by the COTP Savannah. For the purposes of enforcement, actual notice will be used from September 19, 2019 through September 30, 2019.

ADDRESSES: To view documents mentioned in this preamble as being available in the docket, go to *http://www.regulations.gov,* type USCG–2019–0794 in the ''SEARCH'' box and click ''SEARCH.'' Click on Open Docket Folder on the line associated with this rule.

FOR FURTHER INFORMATION CONTACT: If you have questions on this rule, call or email MST1 Rachel Crowe, Marine Safety Unit Savannah Office of Waterways Management, Coast Guard; telephone 912–652–4353, extension 243, or email *Rachel.M.Crowe@uscg.mil.*

SUPPLEMENTARY INFORMATION:

I. Table of Abbreviations

CFR Code of Federal Regulations
DHS Department of Homeland Security
FR Federal Register
NPRM Notice of proposed rulemaking
§ Section
U.S.C. United States Code

II. Background Information and Regulatory History

The Coast Guard is issuing this temporary rule without prior notice and opportunity to comment pursuant to authority under section 4(a) of the Administrative Procedure Act (APA) (5 U.S.C. 553(b)). This provision authorizes an agency to issue a rule without prior notice and opportunity to comment when the agency for good cause finds that those procedures are ''impracticable, unnecessary, or contrary to the public interest.'' Under 5 U.S.C. 553(b)(B), the Coast Guard finds that good cause exists for not publishing a notice of proposed rulemaking (NPRM) with respect to this rule because doing so would be impracticable due to the emergent situation. Immediate action is needed to respond to the potential safety hazards created by the M/V GOLDEN RAY. The Coast Guard received information on September 8, 2019 regarding the vessel laying over on its side and impeding the navigable channel. Because of the on-going dangers posed by the grounded M/V GOLDEN RAY, this safety zone is necessary to provide for the safety of persons, vessels, and the marine environment in the incident area. Therefore, it is impracticable to delay promulgating this rule, as it is necessary to protect the safety of waterway users.

Under 5 U.S.C. 553(d)(3), the Coast Guard finds that good cause exists for making this rule effective less than 30 days after publication in the **Federal Register** Delaying the effective date of this rule would be impracticable because immediate action is needed to respond to the potential safety hazards associated with the M/V GOLDEN RAY.

III. Legal Authority and Need for Rule

The Coast Guard is issuing this rule under authority in 46 U.S.C. 70041 (previously 33 U.S.C. 1233). The COTP Savannah has determined that potential hazards associated with the M/V GOLDEN RAY casualty, will be a safety concern for anyone transiting in the area. This rule is needed to protect personnel, vessels, and the marine environment in the navigable waters within the safety zone while salvage and response operations are on going.

IV. Discussion of the Rule

This rule establishes a safety zone on September 19, 2019 surrounding the M/V GOLDEN RAY. No vessel is authorized access within 150 yards of the M/V GOLDEN RAY, unless authorized by the Captain of the Port. The previous safety zone established on September 12, 2019 is terminated.

V. Regulatory Analyses

We developed this rule after considering numerous statutes and Executive orders related to rulemaking. Below we summarize our analyses based on a number of these statutes and Executive orders, and we discuss First Amendment rights of protestors.

A. Regulatory Planning and Review

Executive Orders 12866 and 13563 direct agencies to assess the costs and benefits of available regulatory alternatives and, if regulation is necessary, to select regulatory approaches that maximize net benefits. Executive Order 13771 directs agencies to control regulatory costs through a budgeting process. This rule has not been designated a ''significant regulatory action,'' under Executive Order 12866. Accordingly, this rule has not been reviewed by the Office of Management and Budget (OMB), and pursuant to OMB guidance it is exempt from the requirements of Executive Order 13771.

This regulatory action determination is based on the size, location, and hazards associated with the vessel, as well as the complexity of salvage and pollution response operations. The safety zone is limited in size and will cover all navigable waters within a 150-yard radius of the M/V GOLDEN RAY for all vessels—a size necessary to ensure the safe operations of salvage and pollution response. No vessel is authorized access within 150 yards of the M/V GOLDEN RAY, unless authorized by the Captain of the Port. The Coast Guard will provide notification of the safety zone to the local maritime community by Local Notice to Mariners, Broadcast Notice to Mariners via VHF–FM marine channel 16, a Marine Safety Information Bulletin release, and an INMARSAT C message to NAVAREA IV. This notice allows mariners to make alternative plans or seek permission to transit the zone.

B. Impact on Small Entities

The Regulatory Flexibility Act of 1980, 5 U.S.C. 601–612, as amended, requires Federal agencies to consider the potential impact of regulations on small entities during rulemaking. The term ''small entities'' comprises small businesses, not-for-profit organizations that are independently owned and operated and are not dominant in their fields, and governmental jurisdictions with populations of less than 50,000. The Coast Guard certifies under 5 U.S.C. 605(b) that this rule will not have a significant economic impact on a substantial number of small entities.

While some owners or operators of vessels intending to transit the safety zone may be small entities, for the reasons stated in section V.A above, this rule will not have a significant economic impact on any vessel owner or operator.

Under section 213(a) of the Small Business Regulatory Enforcement Fairness Act of 1996 (Pub. L. 104–121), we want to assist small entities in understanding this rule. If the rule would affect your small business, organization, or governmental jurisdiction and you have questions concerning its provisions or options for compliance, please contact the person listed in the **FOR FURTHER INFORMATION CONTACT** section.

Small businesses may send comments on the actions of Federal employees who enforce, or otherwise determine compliance with, Federal regulations to the Small Business and Agriculture Regulatory Enforcement Ombudsman and the Regional Small Business Regulatory Fairness Boards. The Ombudsman evaluates these actions annually and rates each agency's responsiveness to small business. If you wish to comment on actions by employees of the Coast Guard, call 1–888–REG–FAIR (1–888–734–3247). The Coast Guard will not retaliate against small entities that question or complain about this rule or any policy or action of the Coast Guard.

C. Collection of Information

This rule will not call for a new collection of information under the Paperwork Reduction Act of 1995 (44 U.S.C. 3501–3520).

D. Federalism and Indian Tribal Governments

A rule has implications for federalism under Executive Order 13132, Federalism, if it has a substantial direct effect on the States, on the relationship between the national government and the States, or on the distribution of power and responsibilities among the various levels of government. We have analyzed this rule under that Order and have determined that it is consistent with the fundamental federalism principles and preemption requirements described in Executive Order 13132.

Also, this rule does not have tribal implications under Executive Order 13175, Consultation and Coordination with Indian Tribal Governments, because it does not have a substantial direct effect on one or more Indian tribes, on the relationship between the Federal Government and Indian tribes, or on the distribution of power and responsibilities between the Federal Government and Indian tribes. If you believe this rule has implications for federalism or Indian tribes, please contact the person listed in the **FOR FURTHER INFORMATION CONTACT** section above.

E. Unfunded Mandates Reform Act

The Unfunded Mandates Reform Act of 1995 (2 U.S.C. 1531–1538) requires Federal agencies to assess the effects of their discretionary regulatory actions. In particular, the Act addresses actions that may result in the expenditure by a State, local, or tribal government, in the aggregate, or by the private sector of $100,000,000 (adjusted for inflation) or more in any one year. Though this rule will not result in such an expenditure, we do discuss the effects of this rule elsewhere in this preamble.

F. Environment

We have analyzed this rule under Department of Homeland Security Directive 023–01 and Commandant Instruction M16475.1D, which guide the Coast Guard in complying with the National Environmental Policy Act of 1969 (42 U.S.C. 4321–4370f), and have determined that this action is one of a category of actions that do not individually or cumulatively have a significant effect on the human environment. This rule involves a safety zone lasting until the COTP Savannah determines the M/V GOLDEN RAY is no longer a hazard to the safety of persons and vessels transiting the area. It is categorically excluded from further review under paragraph L 60(a) in Table 3–1 of U.S. Coast Guard Environmental Planning Implementing Procedures

5090.1. A Record of Environmental Consideration supporting this determination is available in the docket where indicated under **ADDRESSES**.

G. Protest Activities

The Coast Guard respects the First Amendment rights of protesters. Protesters are asked to contact the person listed in the **FOR FURTHER INFORMATION CONTACT** section to coordinate protest activities so that your message can be received without jeopardizing the safety or security of people, places or vessels.

List of Subjects in 33 CFR Part 165

Harbors, Marine safety, Navigation (water), Reporting and recordkeeping requirements, Security measures, Waterways.

For the reasons discussed in the preamble, the Coast Guard amends 33 CFR part 165 as follows:

PART 165—REGULATED NAVIGATION AREAS AND LIMITED ACCESS AREAS

■ 1. The authority citation for part 165 continues to read as follows:

Authority: 46 U.S.C. 70034, 70051; 33 CFR 1.05–1, 6.04–1, 6.04–6, and 160.5; Department of Homeland Security Delegation No. 0170.1.

■ 2. Add § 2019–0794 to read as follows:

§ 2019–0794 Safety Zone; M/V GOLDEN RAY; Saint Simons Sound, GA.

(a) *Regulated area.* The following areas are established as safety zones: All navigable waters within a 150-yard radius surrounding the M/V GOLDEN RAY, which is, grounded in position 31°07′39.66 North, 081°24′10.58 West, between Saint Simons lighthouse and the north end of Jekyll Island, in the vicinity of green buoy #19. All coordinates are North American Datum 1983 (NAD 83).

(b) *Definition.* As used in this section, ''designated representative'' means Coast Guard Patrol Commanders, including Coast Guard coxswains, petty officers, and other officers operating Coast Guard vessels or aircraft, and federal, state, and local officers designated by or assisting the Captain of the Port (COTP) Savannah in the enforcement of the regulated areas.

(c) *Regulations.* (1) No vessel is authorized access within 150 yards of the M/V GOLDEN RAY, unless authorized by the Captain of the Port.

(2) Persons or vessels desiring to enter, transit through, anchor in, or remain within the safety zone may contact COTP Savannah by telephone at (912) 652–4353, or a designated representative via VHF radio on channel 16, to request authorization. If authorization to enter, transit through, anchor in, or remain within the regulated area is granted by the COTP Savannah or a designated representative, all persons and vessels receiving such authorization must comply with the instructions of the COTP Savannah or a designated representative.

(3) The Coast Guard will provide actual notice of the regulated area by Local Notice to Mariners, Broadcast Notice to Mariners, Marine Safety Information Bulletin, on-scene designated representatives, and an INMARSAT C message to NAVAREA IV.

(e) *Enforcement period.* This section will be enforced starting September 19, 2019, and will be in effect until further notice.

Dated: September 19, 2019.

Norm C. Witt,

Commander, U.S. Coast Guard, Captain of the Port Savannah.

[FR Doc. 2019–20781 Filed 9–27–19; 8:45 am]

BILLING CODE 9110–04–P

ENVIRONMENTAL PROTECTION AGENCY

40 CFR Part 52

[EPA–R07–OAR–2019–0334; FRL–10000–15–Region 7]

Air Plan Approval; Missouri; Infrastructure State Implementation Plan Requirements for the 2015 Ozone National Ambient Air Quality Standard

AGENCY: Environmental Protection Agency (EPA).

ACTION: Final rule.

SUMMARY: The Environmental Protection Agency (EPA) is approving elements of a State Implementation Plan (SIP) revision submission from the State of Missouri addressing the applicable requirements of section 110 of the Clean Air Act (CAA) for the 2015 Ozone (O_3) National Ambient Air Quality Standard (NAAQS). Section 110 requires that each state adopt and submit a SIP revision to support the implementation, maintenance, and enforcement of each new or revised NAAQS promulgated by the EPA. These SIPs are commonly referred to as ''infrastructure'' SIPs. The infrastructure requirements are designed to ensure that the structural components of each state's air quality management program are adequate to meet the state's responsibilities under the CAA. The EPA is also approving a request from the State to exempt all counties in the Metropolitan Kansas City Interstate Air Quality Control Region (Kansas City AQCR) and all of Jefferson and most of Franklin (except Boles Township) counties in the Metropolitan St. Louis Interstate (St. Louis AQCR) from needing an ozone contingency plan meeting the EPA's requirements.

DATES: This final rule is effective on October 30, 2019.

ADDRESSES: The EPA has established a docket for this action under Docket ID No. EPA–R07–OAR–2019–0334. All documents in the docket are listed on the *https://www.regulations.gov* website. Although listed in the index, some information is not publicly available, *i.e.,* CBI or other information whose disclosure is restricted by statute. Certain other material, such as copyrighted material, is not placed on the internet and will be publicly available only in hard copy form. Publicly available docket materials are available through *https://www.regulations.gov* or please contact the person identified in the **FOR FURTHER INFORMATION CONTACT** section for additional information.

FOR FURTHER INFORMATION CONTACT: Tracey Casburn, Environmental Protection Agency, Region 7 Office, Air Quality and Planning Branch, 11201 Renner Boulevard, Lenexa, Kansas 66219; telephone number (913) 551–7016; email address *casburn.tracey@epa.gov.*

SUPPLEMENTARY INFORMATION: Throughout this document ''we,'' ''us,'' and ''our'' refer to EPA.

Table of Contents

I. Background
II. What is being addressed in this document?
III. Have the requirements for approval of a SIP revision been met?
IV. What is the EPA's response to comment received?
V. What action is the EPA taking?
VI. Statutory and Executive Order Reviews

I. Background

On June 25, 2019, the EPA proposed to approve the State's infrastructure SIP submittal for the 2015 O_3 NAAQS and to approve a request to exempt all counties in the Kansas City AQCR, and Jefferson and Franklin (except Bowles Township) counties in the St. Louis AQCR, from needing to meet the requirement to have an ozone contingency plan found in at 40 CFR part 51, subpart H, in the **Federal Register**.[1] *See* 84 FR 29826. The EPA

[1] 51.152(d) (1) allows the Administrator to exempt portions of a Priority I, IA, or II AQCR which have been designated as attainment or

Continued

solicited comments on the proposed SIP revisions and received one comment.

II. What is being addressed in this document?

The EPA is approving the infrastructure SIP submission received from the State on April 11, 2019, in accordance with section 110(a)(1) of the CAA. Specifically, the EPA is approving the following infrastructure elements of section 110(a)(2) of the CAA: (A) through (C), (D)(i)(II)—prevention of significant deterioration of air quality (prong 3) and protection of visibility (prong 4), (D)(ii), (E) through (H), and (J) through (M). Elements of section 110(a)(2)(D)(i)(I)—significant contribution to nonattainment (prong 1) and interfering with maintenance of the NAAQs (prong 2) were addressed in a separate SIP submission and are not addressed in this document. Section 110(a)(2)(I) was also not addressed in the submission, however, the EPA does not expect infrastructure SIP submissions to address element (I). Section 110(a)(2)(I) requires states to meet the applicable SIP requirements of part D of the CAA relating to designated nonattainment areas. The specific part D submissions for designated nonattainment areas are subject to different submission schedules than those for section 110 infrastructure elements. The EPA will act on part D attainment plan SIP submissions through a separate rulemaking governed by the requirements for nonattainment areas, as described in part D.

The EPA is also approving a request from the State to exempt all counties in the Kansas City AQCR, and Jefferson and Franklin (except Bowles Township) counties in the St. Louis AQCR, from needing to meet the requirement to have an ozone contingency plan found in at 40 CFR part 51, subpart H.

A technical support document (TSD) is included as part of the docket to this action and it includes an analysis of how the EPA determined that the submission met the applicable 110(a)(1) and (2) requirements for infrastructure SIPs and the criteria for an exemption from needing an ozone contingency plan for all counties in the Kansas City AQCR, and for Jefferson and Franklin (except Bowles Township) counties in the St. Louis AQCR. A detailed discussion of the submission was provided in the EPA's June 25, 2019, **Federal Register** document. *See* 84 FR 29826.

unclassifiable for national primary and secondary standards under section 107 of the Act from the requirement to have a contingency plan.

III. Have the requirements for approval of a SIP revision been met?

The submission has met the public notice requirements of 40 CFR 51.102. The submission also satisfied the completeness criteria of 40 CFR part 51, appendix V. The State provided a public comment period for the submission from December 31, 2018, to February 7, 2019, and held a public hearing on January 31, 2019. The State received comments from the EPA during the public comment period; the EPA was the only commenter. The State addressed the EPA's comments. As explained in more detail in the TSD, the submission meets the substantive SIP requirements of the CAA, including section 110 and implementing regulations.

IV. What is the EPA's response to comment received?

The public comment period for the EPA's proposed action opened the date of its publication in the **Federal Register**, June 25, 2019, and closed on July 25, 2019. During this period, the EPA received one comment.

Comment: The commenter asked the EPA to clarify what it is exempting, stating that the proposed exemption was for emergency episode planning requirements but that EPA seemed to be proposing to eliminate contingency measures required by nonattainment area planning.

Response: The EPA proposed to approve elements of a SIP revision submission addressing the applicable requirements of section 110 of the CAA for the 2015 O_3 NAAQS, commonly referred to an ''infrastructure'' SIP, and to approve a request to exempt all counties in the Kansas City AQCR and all of Jefferson and most of Franklin (except Boles Township) counties in the St. Louis AQCR from needing an ozone contingency plan meeting the requirements of 40 CFR part 51, subpart H (please see the technical support document, provided in the docket to this rulemaking, and notice of proposed rulemaking, for the EPA's rational for approving the exemption request).

Although it is not clear from the comment, the EPA believes the commenter may have confused the CAA part A 110(a)(2) infrastructure planning requirement to have a contingency plan addressing emergency episodes (element (G)) with the CAA part D 172(c)(9) nonattainment planning requirements to have contingency measures to be undertaken if the area fails to make reasonable further progress, or to attain the NAAQS by the attainment date.

40 CFR part 51, subpart H, includes criteria for classification of areas into AQCRs based on ambient air concentrations of the pollutant being addressed. If an AQCR is classified as a Priority I, IA, or II region for a specified pollutant, then the infrastructure SIP (under element (G)) should contain an emergency contingency plan meeting the specific requirements of 40 CFR 51.151 and 51.152, as appropriate, with respect to that pollutant. The priority classifications for the AQCRs in Missouri can be found at 40 CFR 52.1321.

There is a possibility for all or just some of the counties in an AQCR to also be designated as nonattainment of a NAAQS; an AQCR boundary is not always equivalent to a nonattainment boundary. Nonattainment area designations in Missouri can be found at 40 CFR 81.326. Areas that are designated as nonattainment must fulfill CAA part D requirements. The proposal notice stated that although infrastructure element (I) requires states to meet the applicable part D SIP requirements (related to designated nonattainment areas), because the specific part D section 172 SIP submissions are subject to different submission schedules than those for part A section 110 infrastructure elements, the EPA will act on part D attainment plan SIP submissions through a separate rulemaking governed by the requirements for nonattainment areas, as described in part D.

To be clear the EPA proposed an exemption from 110(a)(2)(G) emergency contingency planning obligations for the named AQCRs. The EPA did not propose to exempt the State from meeting part D section 172 contingency measure requirements (110(a)(2)(I)).

V. What action is the EPA taking?

The EPA is approving the April 11, 2019, SIP submission addressing the infrastructure elements for the 2015 O_3 NAAQS. Specifically, the EPA is approving the following infrastructure elements of section 110(a)(2): (A) through (C), (D)(i)(II)—prong 3 and prong 4, (D)(ii), (E) through (H), and (J) through (M). The EPA is not acting on the elements of section 110(a)(2)(D)(i)(I)—prong 1 and prong 2 because those elements were not addressed in the submission. Section 110(a)(2)(I) was not addressed in the submission and the EPA would not expect it to be.

The EPA is also approving a request from the State to exempt all counties in the Kansas City AQCR, and Jefferson and Franklin (except Bowles Township) counties in the St. Louis AQCR, from

needing to meet the requirement to have an ozone contingency plan found in at 40 CFR part 51, subpart H.

VI. Statutory and Executive Order Reviews

Under the CAA, the Administrator is required to approve a SIP submission that complies with the provisions of the Act and applicable Federal regulations. 42 U.S.C. 7410(k); 40 CFR 52.02(a). Thus, in reviewing SIP submissions, EPA's role is to approve state choices, provided that they meet the criteria of the CAA. Accordingly, this action merely approves state law as meeting Federal requirements and does not impose additional requirements beyond those imposed by state law. For that reason, this action:

- Is not a significant regulatory action subject to review by the Office of Management and Budget under Executive Orders 12866 (58 FR 51735, October 4, 1993) and 13563 (76 FR 3821, January 21, 2011);
- Is not an Executive Order 13771 (82 FR 9339, February 2, 2017) regulatory action because SIP approvals are exempted under Executive Order 12866.
- Does not impose an information collection burden under the provisions of the Paperwork Reduction Act (44 U.S.C. 3501 *et seq.*);
- Is certified as not having a significant economic impact on a substantial number of small entities under the Regulatory Flexibility Act (5 U.S.C. 601 *et seq.*);
- Does not contain any unfunded mandate or significantly or uniquely affect small governments, as described in the Unfunded Mandates Reform Act of 1995 (Pub. L. 104–4);
- Does not have federalism implications as specified in Executive Order 13132 (64 FR 43255, August 10, 1999);
- Is not an economically significant regulatory action based on health or safety risks subject to Executive Order 13045 (62 FR 19885, April 23, 1997);
- Is not a significant regulatory action subject to Executive Order 13211 (66 FR 28355, May 22, 2001);
- Is not subject to requirements of the National Technology Transfer and Advancement Act (NTTA) because this rulemaking does not involve technical standards; and
- Does not provide EPA with the discretionary authority to address, as appropriate, disproportionate human health or environmental effects, using practicable and legally permissible methods, under Executive Order 12898 (59 FR 7629, February 16, 1994).

In addition, the SIP is not approved to apply on any Indian reservation land or in any other area where the EPA or an Indian tribe has demonstrated that a tribe has jurisdiction. In those areas of Indian country, the rule does not have tribal implications and will not impose substantial direct costs on tribal governments or preempt tribal law as specified by Executive Order 13175 (65 FR 67249, November 9, 2000).

The Congressional Review Act, 5 U.S.C. 801 *et seq.,* as added by the Small Business Regulatory Enforcement Fairness Act of 1996, generally provides that before a rule may take effect, the agency promulgating the rule must submit a rule report, which includes a copy of the rule, to each House of the Congress and to the Comptroller General of the United States. EPA will submit a report containing this action and other required information to the U.S. Senate, the U.S. House of Representatives, and the Comptroller General of the United States prior to publication of the rule in the **Federal Register**. A major rule cannot take effect until 60 days after it is published in the **Federal Register**. This action is not a ''major rule'' as defined by 5 U.S.C. 804(2).

Under section 307(b)(1) of the CAA, petitions for judicial review of this action must be filed in the United States Court of Appeals for the appropriate circuit by November 29, 2019. Filing a petition for reconsideration by the Administrator of this final rule does not affect the finality of this action for the purposes of judicial review nor does it extend the time within which a petition for judicial review may be filed, and shall not postpone the effectiveness of such rule or action. This action may not be challenged later in proceedings to enforce its requirements. (See section 307(b)(2)).

List of Subjects in 40 CFR Part 52

Environmental protection, Air pollution control, Air quality control region, Contingency plan, Exemption, Incorporation by reference, Infrastructure, Intergovernmental relations, Ozone.

Dated: September 18, 2019.

James Gulliford,

Regional Administrator, Region 7.

For the reasons stated in the preamble, the EPA amends 40 CFR part 52 as set forth below:

PART 52—APPROVAL AND PROMULGATION OF IMPLEMENTATION PLANS

■ 1. The authority citation for part 52 continues to read as follows:

Authority: 42 U.S.C. 7401 *et seq.*

Subpart—AA Missouri

■ 2. In § 52.1320, the table in paragraph (e) is amended by adding entry ''(78)'' in numerical order to read as follows:

§ 52.1320 Identification of plan.

* * * * *

(e) * * *

EPA-APPROVED MISSOURI NONREGULATORY SIP PROVISIONS

Name of non-regulatory SIP provision	Applicable geographic or nonattainment area	State submittal date	EPA approval date	Explanation
*	*	*	*	*
(78) Sections 110 (a)(1) and 110(a)(2) Infrastructure Requirements for the 2015 Ozone NAAQS. Ozone Contingency Plan Exemptions.	Statewide	4/11/2019	9/30/2019, [insert **Federal Register** citation].	This action approves the following CAA elements: 110(a)(1) and 110(a)(2)(A), (B), (C), (D)(i)(II)—prongs 3 and 4, (D)(ii), (E), (F), (G), (H), (J), (K), (L), and (M). 110(a)(2)(D)(i)(I)—prongs 1 and 2 were not included in the submission. 110(a)(2)(I) is not applicable. This action approves the ozone contingency plan exemptions for all counties in the Kansas City AQCR and Jefferson and Franklin (except Bowles Township) counties in the St. Louis AQCR. [EPA–R07–OAR–2019–0334; FRL–1000–15–Region 7].

[FR Doc. 2019–20671 Filed 9–27–19; 8:45 am]

BILLING CODE 6560–50–P

ENVIRONMENTAL PROTECTION AGENCY

40 CFR Part 52

[EPA–R04–OAR–2019–0153; FRL–10000–26–Region 4]

Air Plan Approval; North Carolina: Amendments of Air Quality Rules

AGENCY: Environmental Protection Agency (EPA).

ACTION: Final rule.

SUMMARY: The Environmental Protection Agency (EPA) is approving a State Implementation Plan (SIP) revision submitted by the North Carolina Department of Environmental Quality, Division of Air Quality (DAQ), through a letter dated March 21, 2018, readopting and amending air quality rules related to transportation conformity requirements in the state of North Carolina. EPA has determined that North Carolina's March 21, 2018, SIP revision is consistent with the federal transportation conformity requirements and the Clean Air Act (CAA or Act).

DATES: This rule is effective October 30, 2019.

ADDRESSES: EPA has established a docket for this action under Docket Identification No. EPA–R04–OAR–2019–0153. All documents in the docket are listed on the *www.regulations.gov* website. Although listed in the index, some information is not publicly available, *i.e.,* Confidential Business Information or other information whose disclosure is restricted by statute. Certain other material, such as copyrighted material, is not placed on the internet and will be publicly available only in hard copy form. Publicly available docket materials are available either electronically through *www.regulations.gov* or in hard copy at the Air Regulatory Management Section, Air Planning and Implementation Branch, Air and Radiation Division, U.S. Environmental Protection Agency, Region 4, 61 Forsyth Street SW, Atlanta, Georgia 30303–8960. EPA requests that if possible, you contact the person listed in the **FOR FURTHER INFORMATION CONTACT** section to schedule your inspection. The Regional Office's official hours of business are Monday through Friday 8:30 a.m. to 4:30 p.m., excluding Federal holidays.

FOR FURTHER INFORMATION CONTACT: Kelly Sheckler, Air Regulatory Management Section, Air Planning and Implementation Branch, Air and Radiation Division, Region 4, U.S. Environmental Protection Agency, 61 Forsyth Street SW, Atlanta, Georgia 30303–8960. The telephone number is (404) 562–9222. Ms. Sheckler can also be reached via electronic mail at *sheckler.kelly@epa.gov.*

SUPPLEMENTARY INFORMATION:

I. Background

EPA is approving a SIP revision submitted by DAQ, through a letter dated March 21, 2018, seeking to readopt and amend the air quality rules pertaining to transportation conformity in the North Carolina SIP.[1] North Carolina's SIP submission revises the following North Carolina regulations in 15A NCAC 2D Section .2000: Section .2001 *Purpose, Scope and Applicability,* Section .2002 *Definitions,* Section .2003 *Transportation Conformity Determination,* and Section .2005 *Memorandum of Agreement.*[2] The changes submitted by North Carolina include updates to applicability and definitions, updates to references, clarifications regarding written commitments to implement control measures, and non-substantive wording, punctuation and formatting changes. EPA is approving the changes to rules .2001, .2002, .2003,[3] and .2005 because the changes do not alter transportation conformity requirements in North Carolina for any applicable area, nor do these changes conflict with the federal requirements for transportation conformity. Thus, the changes are consistent with the federal transportation conformity requirements and the CAA.

EPA proposed approval of the North Carolina March 21, 2018, SIP revision to amend the transportation conformity related state regulations, as mentioned above, on July 8, 2019 (84 FR 32359). The details of North Carolina's submission and the rationale for EPA's actions are explained in the proposed rulemaking. Comments were due on August 7, 2019, and EPA did not receive any comments on the proposed action. EPA is now taking final action to approve the above-referenced revisions.

II. Incorporation by Reference

In this document, EPA is finalizing regulatory text that includes incorporation by reference. In accordance with the requirements of 1 CFR 51.5, EPA is finalizing the incorporation by reference of the following air quality rules under Subchapter 2D of North Carolina's SIP: Section .2001 *Purpose, Scope and Applicability,* Section .2002 *Definitions,* Section .2003 *Transportation Conformity Determination,* and Section .2005 *Memorandum of Agreement* effective January 1, 2018, which amend the State's transportation conformity requirements. EPA has made, and will continue to make, these materials generally available through *www.regulations.gov* and at the EPA Region 4 Office (please contact the person identified in the **FOR FURTHER INFORMATION CONTACT** section of this preamble for more information). Therefore, these materials have been approved by EPA for inclusion in the SIP, have been incorporated by reference by EPA into that plan, are fully federally enforceable under sections 110 and 113 of the CAA as of the effective date of the final rulemaking of EPA's approval, and will be incorporated by reference in the next update to the SIP compilation.[4]

III. Final Action

EPA is taking final action to approve North Carolina's March 21, 2018, SIP revision, which amends and readopts the following rules in Subchapter 2D, Air Pollution Control Requirements: Section .2001 *Purpose, Scope and Applicability,* Section .2002 *Definitions,* Section .2003 *Transportation Conformity Determination,* and Section .2005 *Memorandum of Agreement.* EPA is taking final action to approve these revisions into the State of North Carolina's SIP because they are consistent with the CAA.

IV. Statutory and Executive Order Reviews

Under the CAA, the Administrator is required to approve a SIP submission that complies with the provisions of the Act and applicable Federal regulations. *See* 42 U.S.C. 7410(k); 40 CFR 52.02(a). Thus, in reviewing SIP submissions, EPA's role is to approve state choices, if they meet the criteria of the CAA. This action merely approves state law as

[1] EPA received the official electronic version of the submittal on April 4, 2018. EPA has already taken action on the other North Carolina changes submitted through the cover letter dated March 21, 2018, in a separate action. *See* 84 FR 14308.

[2] The table at 40 CFR 52.1770(c), identifying the North Carolina regulations approved into the SIP, labels each rule as a ''Sect.'' (*i.e.,* Section) under the column titled ''State citation.'' For consistency with the nomenclature used in the table, this notice uses the term ''Section'' when referring to individual North Carolina rules.

[3] With respect to Section .2003, EPA notes that it is approving a cross-reference to the entirety of 40 CFR 93.104 into North Carolina's SIP. Accordingly, EPA is removing the regulatory text in 40 CFR 52.1770(c)(1) that previously stated ''Except for the incorporation by reference of 40 CFR 93.104(e) of the Transportation Conformity Rule.''

[4] *See* 62 FR 27968 (May 22, 1997).

meeting Federal requirements and does not impose additional requirements beyond those imposed by state law. For that reason, this action:

- Does not contain significant regulatory actions subject to review by the Office of Management and Budget under Executive Orders 12866 (58 FR 51735, October 4, 1993) and 13563 (76 FR 3821, January 21, 2011);
- Is not subject to Executive Order 13771 (82 FR 9339, February 2, 2017) regulatory actions because SIP approvals are exempted under Executive Order 12866;
- Does not impose an information collection burden under the provisions of the Paperwork Reduction Act (44 U.S.C. 3501 *et seq.*);
- Is certified as not having significant economic impact on a substantial number of small entities under the Regulatory Flexibility Act (5 U.S.C. 601 *et seq.*);
- Does not contain any unfunded mandate or significantly or uniquely affect small governments, as described in the Unfunded Mandates Reform Act of 1995 (Pub. L. 104–4);
- Does not have Federalism implications as specified in Executive Order 13132 (64 FR 43255, August 10, 1999);
- Does not contain economically significant regulatory actions based on health or safety risks subject to Executive Order 13045 (62 FR 19885, April 23, 1997);
- Does not contain significant regulatory actions subject to Executive Order 13211 (66 FR 28355, May 22, 2001);
- Is not subject to requirements of Section 12(d) of the National Technology Transfer and Advancement Act of 1995 (15 U.S.C. 272 note) because application of those requirements would be inconsistent with the CAA; and
- Does not provide EPA with the discretionary authority to address, as appropriate, disproportionate human health or environmental effects, using practicable and legally permissible methods, under Executive Order 12898 (59 FR 7629, February 16, 1994).

The SIP is not approved to apply on any Indian reservation land or in any other area where EPA or an Indian tribe has demonstrated that a tribe has jurisdiction. In those areas of Indian country, the rule does not have tribal implications as specified by Executive Order 13175 (65 FR 67249, November 9, 2000), nor will it impose substantial direct costs on tribal governments or preempt tribal law.

The Congressional Review Act, 5 U.S.C. 801 *et seq.,* as added by the Small Business Regulatory Enforcement Fairness Act of 1996, generally provides that before a rule may take effect, the agency promulgating the rule must submit a rule report, which includes a copy of the rule, to each House of the Congress and to the Comptroller General of the United States. EPA will submit a report containing this action and other required information to the U.S. Senate, the U.S. House of Representatives, and the Comptroller General of the United States prior to publication of the rule in the **Federal Register**. A major rule cannot take effect until 60 days after it is published in the **Federal Register**. This action is not a ''major rule'' as defined by 5 U.S.C. 804(2).

Under section 307(b)(1) of the CAA, petitions for judicial review of this action must be filed in the United States Court of Appeals for the appropriate circuit by November 29, 2019. Filing a petition for reconsideration by the Administrator of this final rule does not affect the finality of this action for the purposes of judicial review nor does it extend the time within which a petition for judicial review may be filed, and shall not postpone the effectiveness of such rule or action. This action may not be challenged later in proceedings to enforce its requirements. *See* section 307(b)(2).

List of Subjects in 40 CFR Part 52

Environmental protection, Air pollution control, Incorporation by reference, Intergovernmental relations, Nitrogen dioxide, Ozone, Carbon monoxide, Sulfur dioxide, Particulate matter, Lead, Reporting and recordkeeping requirements, Volatile organic compounds.

Dated: September 11, 2019.

Mary S. Walker,

Regional Administrator, Region 4.

40 CFR part 52 is amended as follows:

PART 52—APPROVAL AND PROMULGATION OF IMPLEMENTATION PLANS

■ 1. The authority citation for part 52 continues to read as follows:

Authority: 42.U.S.C. 7401 *et seq.*

Subpart II—North Carolina

■ 2. In § 52.1770, the table (1) in paragraph (c) is amended under ''Subchapter 2D Air Pollution Control Requirements'', ''Section .2000 Transportation Conformity'' by revising the entries for ''Section .2001'', ''Section .2002'', ''Section .2003'', and ''Section .2005'' to read as follows.

§ 52.1770 Identification of plan.

* * * * *

(c) * * *

(1) EPA APPROVED NORTH CAROLINA REGULATIONS

State citation	Title/subject	State effective date	EPA approval date	Explanation
Subchapter 2D Air Pollution Control Requirements				
*	*	*	*	*
Section .2000 Transportation Conformity				
Section .2001	Purpose, Scope and Applicability	1/1/2018	9/30/2019 [Insert citation of publication].	
Section .2002	Definitions	1/1/2018	9/30/2019 [Insert citation of publication].	
Section .2003	Transportation Conformity Determination.	1/1/2018	9/30/2019 [Insert citation of publication].	
*	*	*	*	*
Section .2005	Memorandum of Agreement	1/1/2018	9/30/2019 [Insert citation of publication].	
*	*	*	*	*

* * * * *

[FR Doc. 2019–20676 Filed 9–27–19; 8:45 am]

BILLING CODE 6560–50–P

ENVIRONMENTAL PROTECTION AGENCY

40 CFR Parts 52 and 70

[EPA–R07–OAR–2019–0325; FRL 10000–14–Region 7]

Approval of Air Quality Improvement Plan, Operating Permits Program, and 112(l) Plan; Missouri; Operating Permits

AGENCY: Environmental Protection Agency (EPA).

ACTION: Final rule.

SUMMARY: The Environmental Protection Agency (EPA) is taking final action to approve revisions to the State Implementation Plan (SIP), the Operating Permit Program (OPP), and the 112(l) plan submitted on March 7, 2019, by the State of Missouri. The submission revises Missouri's regulations relating to the requirement for sources of air contaminants to obtain operating permits and to establish procedures for sources of air contaminants to obtain and comply with operating permits. These revisions are primarily administrative in nature and do not impact the stringency of the SIP, the OPP, or the 112(l) plan. Specifically, the revisions correct references, change the term ''regulated pollutant'' to ''regulated air pollutant'', removes unnecessary words, and add definitions. Approval of these revisions will not impact air quality and ensures Federal enforceability of the State's rules.

DATES: This final rule is effective on October 30, 2019.

ADDRESSES: The EPA has established a docket for this action under Docket ID No. EPA–R07–OAR–2019–0325. All documents in the docket are listed on the *https://www.regulations.gov* website. Although listed in the index, some information is not publicly available, *i.e.,* CBI or other information whose disclosure is restricted by statute. Certain other material, such as copyrighted material, is not placed on the internet and will be publicly available only in hard copy form. Publicly available docket materials are available through *https://www.regulations.gov* or please contact the person identified in the **FOR FURTHER INFORMATION CONTACT** section for additional information.

FOR FURTHER INFORMATION CONTACT: Deborah Bredehoft, Environmental Protection Agency, Region 7 Office, Air Quality Planning Branch, 11201 Renner Boulevard, Lenexa, Kansas 66219; telephone number (913) 551–7164; email address *bredehoft.deborah@epa.gov.*

SUPPLEMENTARY INFORMATION: Throughout this document ''we,'' ''us,'' and ''our'' refer to the EPA.

Table of Contents

I. Background
II. What is being addressed in this document?
III. Have the requirements for approval of a SIP revision and Operating Permits Program been met?
IV. What action is the EPA taking?
V. Incorporation by Reference
VI. Statutory and Executive Order Reviews

I. Background

On June 26, 2019, the EPA proposed to approve revisions to the Missouri SIP and Operating Permits Program and 112(l) plan in the **Federal Register**. *See* 84 FR 30068. The proposed revisions correct references, change the term ''regulated pollutant'' to ''regulated air pollutant'', removes unnecessary words, and add definitions. The EPA solicited comments on the proposed revisions to Missouri's SIP and Operating Permits Program, and 112(l) plan, and received no comments.

II. What is being addressed in this document?

The EPA is approving a revision to Missouri's SIP by approving the State's request to revise 10 CSR 10–6.065, *Operating Permits* received March 7, 2019. Missouri revised 10 CSR 10–6.065 to correct references and add definitions.

A detailed discussion of the revision to Missouri's SIP and Operating Permits Program was provided in the EPA's June 26, 2019, **Federal Register** document. *See* 84 FR 30068.

III. Have the requirements for approval of a SIP revision and Operating Permits Program been met?

The State submission has met the public notice requirements for SIP submissions in accordance with 40 CFR 51.102. The submission also satisfied the completeness criteria of 40 CFR part 51, appendix V. The State provided public notice on this SIP revision from August 24, 2018, to October 4, 2018, and received seven total comments with three of those from the EPA. The State adequately addressed the public comments.

IV. What action is the EPA taking?

We are taking final action to approve the revisions to Missouri's SIP and Operating Permits Program by approving the State's request to amend 10 CSR 10–6.065, ''*Operating Permits.*''

V. Incorporation by Reference

In this document, the EPA is finalizing regulatory text that includes incorporation by reference. In accordance with requirements of 1 CFR 51.5, the EPA is finalizing the incorporation by reference of the Missouri Regulations described in the amendments to 40 CFR part 52 set forth below. The EPA has made, and will continue to make, these materials generally available through *www.regulations.gov* and at the EPA Region 7 Office (please contact the person identified in the **FOR FURTHER INFORMATION CONTACT** section of this preamble for more information).

Therefore, these materials have been approved by the EPA for inclusion in the State implementation plan, have been incorporated by reference by EPA into that plan, are fully federally enforceable under sections 110 and 113 of the CAA as of the effective date of the final rulemaking of the EPA's approval, and will be incorporated by reference in the next update to the SIP compilation.[1]

VI. Statutory and Executive Order Reviews

Under the CAA, the Administrator is required to approve a SIP submission that complies with the provisions of the Act and applicable Federal regulations. 42 U.S.C. 7410(k); 40 CFR 52.02(a). Thus, in reviewing SIP submissions, EPA's role is to approve state choices, provided that they meet the criteria of the CAA. Accordingly, this action merely approves state law as meeting Federal requirements and does not impose additional requirements beyond those imposed by state law. For that reason, this action:

- Is not a significant regulatory action subject to review by the Office of Management and Budget under Executive Orders 12866 (58 FR 51735, October 4, 1993) and 13563 (76 FR 3821, January 21, 2011);
- Is not an Executive Order 13771 (82 FR 9339, February 2, 2017) regulatory action because SIP approvals are exempted under Executive Order 12866.
- Does not impose an information collection burden under the provisions of the Paperwork Reduction Act (44 U.S.C. 3501 *et seq.*);
- Is certified as not having a significant economic impact on a substantial number of small entities under the Regulatory Flexibility Act (5 U.S.C. 601 *et seq.*);

[1] 62 FR 27968 (May 22, 1997).

• Does not contain any unfunded mandate or significantly or uniquely affect small governments, as described in the Unfunded Mandates Reform Act of 1995 (Pub. L. 104–4);

• Does not have federalism implications as specified in Executive Order 13132 (64 FR 43255, August 10, 1999);

• Is not an economically significant regulatory action based on health or safety risks subject to Executive Order 13045 (62 FR 19885, April 23, 1997);

• Is not a significant regulatory action subject to Executive Order 13211 (66 FR 28355, May 22, 2001);

• Is not subject to requirements of the National Technology Transfer and Advancement Act (NTTA) because this rulemaking does not involve technical standards; and

• Does not provide EPA with the discretionary authority to address, as appropriate, disproportionate human health or environmental effects, using practicable and legally permissible methods, under Executive Order 12898 (59 FR 7629, February 16, 1994).

In addition, the SIP is not approved to apply on any Indian reservation land or in any other area where the EPA or an Indian tribe has demonstrated that a tribe has jurisdiction. In those areas of Indian country, the rule does not have tribal implications and will not impose substantial direct costs on tribal governments or preempt tribal law as specified by Executive Order 13175 (65 FR 67249, November 9, 2000).

The Congressional Review Act, 5 U.S.C. 801 *et seq.,* as added by the Small Business Regulatory Enforcement Fairness Act of 1996, generally provides that before a rule may take effect, the agency promulgating the rule must submit a rule report, which includes a copy of the rule, to each House of the Congress and to the Comptroller General of the United States. EPA will submit a report containing this action and other required information to the U.S. Senate, the U.S. House of Representatives, and the Comptroller General of the United States prior to publication of the rule in the **Federal Register**. A major rule cannot take effect until 60 days after it is published in the **Federal Register**. This action is not a ''major rule'' as defined by 5 U.S.C. 804(2).

Under section 307(b)(1) of the CAA, petitions for judicial review of this action must be filed in the United States Court of Appeals for the appropriate circuit by November 29, 2019. Filing a petition for reconsideration by the Administrator of this final rule does not affect the finality of this action for the purposes of judicial review nor does it extend the time within which a petition for judicial review may be filed, and shall not postpone the effectiveness of such rule or action. This action may not be challenged later in proceedings to enforce its requirements. (See section 307(b)(2)).

List of Subjects

40 CFR Part 52

Environmental protection, Air pollution control, Carbon monoxide, Incorporation by reference, Intergovernmental relations, Lead, Nitrogen dioxide, Ozone, Particulate matter, Reporting and recordkeeping requirements, Sulfur oxides, Volatile organic compounds.

40 CFR Part 70

Environmental protection, Administrative practice and procedure, Air pollution control, Intergovernmental relations, Operating permits, Reporting and recordkeeping requirements.

Dated: September 18, 2019.

James Gulliford,

Regional Administrator, Region 7.

For the reasons stated in the preamble, the EPA amends 40 CFR parts 52 and 70 as set forth below:

PART 52—APPROVAL AND PROMULGATION OF IMPLEMENTATION PLANS

■ 1. The authority citation for part 52 continues to read as follows:

Authority: 42 U.S.C. 7401 *et seq.*

Subpart AA—Missouri

■ 2. In § 52.1320, the table in paragraph (c) is amended by revising the entry ''10–6.065'' to read as follows:

§ 52.1320 Identification of plan.

* * * * *

(c) * * *

EPA-APPROVED MISSOURI REGULATIONS

Missouri citation	Title	State effective date	EPA approval date	Explanation
Missouri Department of Natural Resources				
*	*	*	*	*
Chapter 6—Air Quality Standards, Definitions, Sampling and Reference Methods, and Air Pollution Control Regulations for the State of Missouri				
*	*	*	*	*
10–6.065	Operating Permits	3/30/2019	9/30/2019, [insert **Federal Register** citation].	Section (5) contains provisions pertaining only to Missouri's part 70 program and is not approved as a revision to the SIP.
*	*	*	*	*

* * * * *

PART 70—STATE OPERATING PERMIT PROGRAMS

■ 3. The authority citation for part 70 continues to read as follows:

Authority: 42 U.S.C. 7401, *et seq.*

■ 4. Appendix A to part 70 is amended by adding paragraph (ii) under ''Missouri'' to read as follows:

Appendix A to Part 70—Approval Status of State and Local Operating Permits Programs

* * * * *

Missouri

* * * * *

(ii) The Missouri Department of Natural Resources submitted revisions to Missouri rule 10 CSR 10–6.065, ''Operating Permits'' on March 7, 2019. The State effective date is March 30, 2019. The revision is effective October 30, 2019.

* * * * *

[FR Doc. 2019–20670 Filed 9–27–19; 8:45 am]

BILLING CODE 6560–50–P

ENVIRONMENTAL PROTECTION AGENCY

40 CFR Parts 52 and 81

[EPA–R03–OAR–2019–0262; FRL–10000–27–Region 3]

Approval and Promulgation of Air Quality Implementation Plans; Pennsylvania; Redesignation Requests and Maintenance Plans for Delaware County and Lebanon County 2012 Fine Particulate Matter Areas

AGENCY: Environmental Protection Agency (EPA).

ACTION: Final rule.

SUMMARY: The Environmental Protection Agency (EPA) is approving requests for redesignation to attainment status as well as state implementation plan (SIP) revisions submitted by the Commonwealth of Pennsylvania. On January 23, 2019 and February 11, 2019, respectively, the Pennsylvania Department of Environmental Protection (PADEP) submitted requests for EPA to redesignate the Delaware County and Lebanon County nonattainment areas (the Delaware and Lebanon Areas or the Areas) to attainment of the 2012 annual fine particulate matter ($PM_{2.5}$) national ambient air quality standards (NAAQS). EPA is granting PADEP's requests and determining that the Delaware and Lebanon Areas meet the 2012 annual $PM_{2.5}$ NAAQS, based on the most recent three years of certified air quality data. The effect of this action is to change the designation status of the Delaware and Lebanon Areas from nonattainment to attainment for the 2012 annual $PM_{2.5}$ NAAQS, thereby removing the requirement for a nonattainment new source review (NNSR) permitting program and stopping the sanctions clock associated with a finding of failure to submit NNSR updates for the 2012 annual $PM_{2.5}$ NAAQS. EPA is also approving PADEP's plans to ensure that the Delaware and Lebanon Areas continue to meet the 2012 $PM_{2.5}$ NAAQS through 2030 (maintenance plans) as revisions to the Pennsylvania SIP. The maintenance plans for the Delaware and Lebanon Areas include 2014, 2022, and 2030 motor vehicle emissions budgets (MVEBs) for mobile sources of $PM_{2.5}$ and nitrogen oxides (NO_X). Finally, EPA is finding these 2014, 2022, and 2030 MVEBs for $PM_{2.5}$ and NO_X adequate and is approving these MVEBs into the Pennsylvania SIP for transportation conformity purposes. This action is being taken under the Clean Air Act (CAA).

DATES: This final rule is effective on October 30, 2019.

ADDRESSES: EPA has established a docket for this action under Docket ID Number EPA–R03–OAR–2019–0262. All documents in the docket are listed on the *https://www.regulations.gov* website. Although listed in the index, some information is not publicly available, *e.g.,* confidential business information (CBI) or other information whose disclosure is restricted by statute. Certain other material, such as copyrighted material, is not placed on the internet and will be publicly available only in hard copy form. Publicly available docket materials are available through *https://www.regulations.gov,* or please contact the person identified in the **FOR FURTHER INFORMATION CONTACT** section for additional availability information.

FOR FURTHER INFORMATION CONTACT: Maria A. Pino, Planning & Implementation Branch (3AD30), Air & Radiation Division, U.S. Environmental Protection Agency, Region III, 1650 Arch Street, Philadelphia, Pennsylvania 19103. The telephone number is (215) 814–2181. Ms. Pino can also be reached via electronic mail at *pino.maria@epa.gov.*

SUPPLEMENTARY INFORMATION:

I. Background

On December 18, 2014, the EPA Administrator signed a final action promulgating initial designations for the 2012 primary $PM_{2.5}$ NAAQS based on 2011–2013 air quality monitoring data for the majority of the United States. 80 FR 2206 (January 15, 2015). In that action, the Delaware Area, which consists of Delaware County, Pennsylvania, and the Lebanon Area, which consists of Lebanon County, Pennsylvania, were designated as moderate nonattainment areas for the 2012 annual $PM_{2.5}$ NAAQS. See 40 CFR 81.339.

On April 6, 2018, EPA published a ''finding of failure to submit'' required SIP elements for the 2012 annual $PM_{2.5}$ NAAQS for several nonattainment areas nationwide, including the Delaware and Lebanon Areas. See 83 FR 14759. EPA's finding of failure to submit, effective May 7, 2018, included a determination that Pennsylvania had not met its obligations for the NNSR permit program because Pennsylvania did not regulate emissions of volatile organic compounds (VOCs) and ammonia (NH_3) as $PM_{2.5}$ precursors. Sanctions associated with this finding for the Delaware and Lebanon Areas will take effect on November 7, 2019, unless EPA fully approves the Pennsylvania's redesignation requests by November 7, 2019. As NNSR is not required in attainment areas, upon final redesignation of the Delaware and Lebanon Areas to attainment, the NNSR updates will no longer be required for the Areas, thus nullifying the findings of failure to submit and stopping the sanctions clock.

On January 23, 2019 and February 11, 2019, respectively, PADEP submitted requests for EPA to redesignate the Delaware and Lebanon Areas to attainment of the 2012 annual $PM_{2.5}$ NAAQS. Section 107(d)(3)(E) of the CAA allows redesignation of an area to attainment of the NAAQS provided that: (1) The Administrator (EPA) determines that the area has attained the applicable NAAQS; (2) the Administrator has fully approved the applicable implementation plan for the area under section 110(k) of the CAA; (3) the Administrator determines that the improvement in air quality is due to permanent and enforceable reductions in emissions resulting from implementation of the applicable SIP, applicable Federal air pollutant control regulations, and other permanent and enforceable emission reductions; (4) the Administrator has fully approved a maintenance plan for the area as meeting the requirements of section 175A of the CAA; and (5) the state containing the area has met all requirements applicable to the area for purposes of redesignation under section 110 and part D of title I of the CAA. EPA evaluated Pennsylvania's redesignation requests for the Delaware and Lebanon County Areas and determined that they met these criteria. Therefore, EPA proposed approval of Pennsylvania's redesignation requests and the associated maintenance plans for the Delaware and Lebanon County Areas in a notice of proposed pulemaking (NPRM) on July 16, 2019 (84 FR 33886).

II. Summary of SIP Revision and EPA Analysis

EPA is taking several actions related to the redesignation of the Delaware and Lebanon Areas to attainment of the 2012 annual $PM_{2.5}$ NAAQS. EPA is finding that the Delaware and Lebanon moderate nonattainment areas are attaining the 2012 annual $PM_{2.5}$ NAAQS. EPA is approving Pennsylvania's 2012 annual $PM_{2.5}$

maintenance plans for the Delaware and Lebanon Areas as revisions to the Pennsylvania SIP that include MVEBs for $PM_{2.5}$ and NO_X for the years 2014, 2022, and 2030. Further, EPA is finding that Pennsylvania meets the requirements for redesignation of the Delaware and Lebanon Areas to attainment of the 2012 annual $PM_{2.5}$ NAAQS under section 107(d)(3)(E) of the CAA. EPA is thus granting Pennsylvania's request to change the designation of the Delaware and Lebanon Areas from nonattainment to attainment of the 2012 annual $PM_{2.5}$ NAAQS. Finally, EPA is finding the 2014, 2022, and 2030 MVEBs for $PM_{2.5}$ and NO_X adequate for transportation conformity purposes and is finalizing the approval of the MVEBs into the Pennsylvania SIP. The comment period for these MVEBs began upon publication of the NPRM with EPA's posting of the availability of Pennsylvania's maintenance plan submittal for the Delaware and Lebanon Areas on EPA's Adequacy website which can be found at *https://www.epa.gov/state-and-local-transportation.*

Other specific requirements of Pennsylvania's redesignation requests, maintenance plans, and associated MVEBs, and the rationale for EPA's proposed action are explained in the NPRM and will not be restated here.

III. Public Comments and EPA Response

During the public comment period on EPA's July 16, 2019 NPRM for this rulemaking, EPA received comments from one anonymous commenter. Those comments and EPA's responses are discussed below. All of the comments received and any submitted attachments are included in the docket for this action, available online at *www.regulations.gov,* Docket ID: EPA–R03–OAR–2019–0262.

Comment 1: The commenter argues that EPA's own data indicates that the annual readings from the Delaware County monitors are going up, from 11.0 micrograms per cubic meter (μg/m³) in 2016 to 9.1 μg/m³ in 2017 to 12.1 μg/m³ in 2018.

EPA Response 1: EPA disagrees with this comment. It is more relevant to look at trends in the design value (DV), which is a statistic or summary metric based on the most recent three years of monitored data that describes the air quality status of a given location relative to the level of the NAAQS, rather than trends in annual mean at a given monitoring site, for two reasons: First, design values can be directly compared to the NAAQS, since they are in the same form as the NAAQS. In appendix N to 40 CFR part 50, ''Interpretation of the National Ambient Air Quality Standards for $PM_{2.5}$,'' the annual $PM_{2.5}$ design value is defined as the ''3-year average of $PM_{2.5}$ annual mean mass concentrations for each eligible monitoring site.'' As stated in EPA's regulations at 40 CFR 50.18, ''The primary annual $PM_{2.5}$ standard is met when the annual arithmetic mean concentration, as determined in accordance with appendix N of this part, is less than or equal to 12.0 μg/m³.'' Pursuant to section 4.1 of appendix N of 40 CFR part 50, the primary annual $PM_{2.5}$ NAAQS is met ''when the annual $PM_{2.5}$ NAAQS DV is less than or equal to 12.0 μg/m³ at each eligible monitoring site.'' Second, because the DV is calculated as a three-year average, it better accounts for year to year variability in meteorological conditions and economic factors that may impact the emissions and/or particulate matter formation in an area, and thereby affect the annual mean at a given monitoring site. The ten-year trends in DVs at the two Delaware County monitoring sites are shown in Table 1. This data is publicly available, and can be found at EPA's Air Quality Design Values website: *https://www.epa.gov/air-trends/air-quality-design-values.*

TABLE 1—DELAWARE COUNTY DVS, 2007–2009 TO 2016–2018

	Design value(μg/m³)									
Site ID	2007–2009	2008–2010	2009–2011	2010–2012	2011–2013	2012–2014	2013–2015	2014–2016	2015–2017	2016–2018
42–045–0002	13.7	13.3	12.9	13.1	12.4	12.3	11.6	11.5	10.3	10.7
42–045–0109*	.....	.....	.....	.....	.....	.....	.....	.....	9.4	9.4

*This site started operating on January 1, 2015. Its first valid design value was the 2015–2017 design value.

Figure 1 graphically depicts the ten-year DV trend at site 42–045–0002. EPA did not plot the trend for site 42–045–0109, as it only has two valid design values. Through a linear regression analysis, Figure 1 shows a downward trend for site 42–045–0002, with the 2015–2017 DV noticeably lower than the ten-year trend line, and the 2016–2018 DV slightly above.

Figure 1. Delaware County DV Trend, 2007-2009 to 2016-2018, for Site 42-045-0002

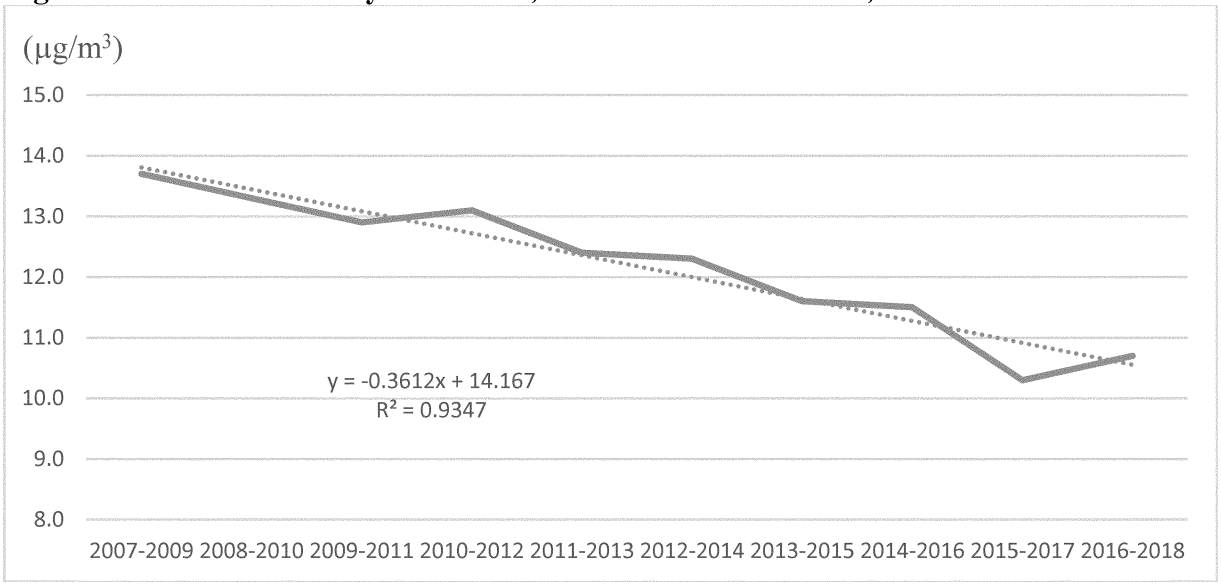

EPA also examined annual mean data for the primary monitor [1] at site 42–045–0002 for a similar timeframe. This data was obtained from EPA's Air Quality System (AQS) database, and is set out in Table 2. This data has been added to the docket for this final action, available online at *https://www.regulations.gov,* Docket ID: EPA–R03–OAR–2019–0262.

TABLE 2—DELAWARE COUNTY 2007–2018 ANNUAL MEANS AT THE PRIMARY MONITOR AT SITE 42–045–0002

Annual mean (μg/m3)											
2007	2008	2009	2010	2011	2012	2013	2014	2015	2016	2017	2018
14.45	13.84	13.01	13.53	12.96	13.12	11.48	12.66	10.74	11.04	9.07	11.38

Figure 2 graphically depicts the annual mean trend at the primary monitor at site 42–045–0002. Figure 2 shows that the 2017 annual mean is noticeably lower than the trend line, and the 2018 annual mean is noticeably higher. Similar variability in annual means is seen throughout the 12-year period. This is expected, since annual means are more sensitive to annual changes in weather patterns and emissions than DVs. However, Figure 2 shows a downward trend for the primary monitor at site 42–045–0002, which is consistent with improved air quality.

[1] The primary monitor at site 42–045–0002 was POC 1 for 2007–2009, and POC 3 for 2010–2018. "POC" refers to the Parameter Occurrence Code. POCs are used to distinguish between different monitors at one site that are measuring the same "parameter" (*i.e.* $PM_{2.5}$).

Figure 2. Delaware County Annual Mean Trend, 2007-2018, for the Primary Monitor at Site 42-045-0002

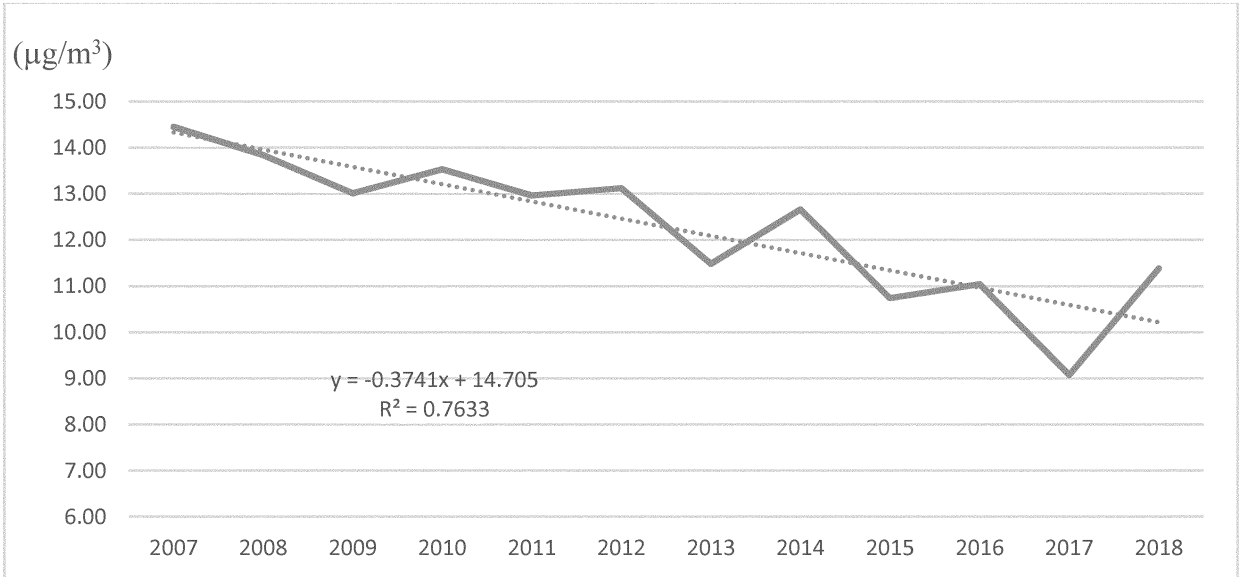

Comment 2: The commenter states that the data in 2018 doesn't appear to be complete since there were only three complete quarters and the report indicates values with an * as values that are not complete.

EPA Response 2: EPA disagrees with this comment. The 2018 data included in the docket for the proposed rulemaking action was preliminary data, which was not yet certified by Pennsylvania. This data has since been certified and EPA has finalized the 2016–2018 DVs. The certified 2016–2018 data in AQS for Delaware and Lebanon Counties is shown in Table 3. This data has been added to the docket for this final action, available online at *https://www.regulations.gov,* Docket ID: EPA–R03–OAR–2019–0262.

TABLE 3—2016–2018 ANNUAL MEANS, COMPLETE QUARTERS, AND DVS AT DELAWARE COUNTY AND LEBANON COUNTY MONITORS

Area/county	Monitor ID	Annual means (μg/m³)			Complete quarters			2016–2016 design value (μg/m³)
		2016	2017	2018	2016	2017	2018	
Delaware	42–045–0002	11.0	9.1	[2] 12.1	4	4	4	10.7
Delaware	42–045–0109	9.3	8.3	10.8	4	4	3	9.4
Lebanon	42–075–0100	9.7	9.3	8.8	4	4	4	9.3

The Lebanon County monitor and monitor 42–045–0002 in Delaware County both have four complete quarters of data for all three years, 2016 to 2018. Monitor 42–045–0109 has four complete quarters in 2016 and 2017, and three complete quarters in 2018. However, this monitor has a valid design value because, as provide in 40 CFR part 50, appendix N, 4.1(c)(ii), it passed the ''maximum quarterly value data substitution test.'' An annual $PM_{2.5}$ NAAQS DV that is equal to or below the level of the NAAQS can be validated if it passes the maximum quarterly value data substitution test. This type of data substitution is permitted only if there is at least 50 percent data capture in each quarter that is deficient of 75 percent data capture in each of the three years under consideration. Data substitution will be performed in all quarter periods that have less than 75 percent data capture but at least 50 percent data capture. If any quarter has less than 50 percent data capture, then this substitution test cannot be used.

Comment 3: The commenter argues that ''EPA's data for the Delaware County monitors simply show consistently borderline attainment and not verifiable emission reductions.''

EPA Response 3: EPA disagrees with this comment because as shown in EPA's response to Comment 1, the DVs at both Delaware County monitors are below the level of the NAAQS, and the DVs at monitor 42–045–0002 show a linear downward trend consistent with attainment of the 2012 $PM_{2.5}$ NAAQS.

Comment 4: The commenter also claims that ''[t]he Lancaster monitor only has 2 complete quarters in 2018, so why would EPA even consider this data?''

EPA Response 4: EPA assumes that the commenter is referring to the Lebanon County monitor, and not any monitor in Lancaster, which is not the subject of this rulemaking action. As explained in EPA's response to comment #2, at the time of EPA's proposed rulemaking action, the 2018 data was preliminary. EPA subsequently finalized the 2016–2018 design values. As shown in Table 3, the final, certified data for 2018 has four complete quarters, and the final 2016–2018 DV is 9.3 μg/m³, which is well below the level of the 2012 annual $PM_{2.5}$ NAAQS, 12.0 μg/m³.

Comment 5: The commenter urges EPA to ''[u]se the most current air quality data, not data from mid-2018 that doesn't have fully complete data!''

[2] Note that the 2018 annual mean reported in Table 3 is different than annual mean reported in Table 2. This difference is due to the fact that design values are calculated from site-level data rather than monitor-level data. For more information, see appendix N to 40 CFR part 50.

EPA Response 5: As stated in responses to Comments 2 and 4, complete, certified 2018 data was not available at the time of EPA's proposed rulemaking action. Since that time, Pennsylvania has certified its 2018 data and EPA has since finalized the 2016–2018 DVs. That data is reported in Table 3.

Comment 6: The commenter takes issue with the technical support documents (TSDs) for Delaware and Lancaster Counties and opines that EPA's evaluation was not a thorough evaluation that explains why Pennsylvania's emissions projections are adequate.

EPA Response 6: Pennsylvania submitted their attainment and projection year emission inventories in accordance with EPA's Emission Inventory Guidance for Implementation of Ozone and Particulate Matter National Ambient Air Quality Standards (NAAQS) and Regional Haze Regulations (May 2017) [3] and following EPA's Memorandum Procedures for Processing Requests to Redesignate Areas to Attainment (Calcagni 9/4/92 memo).[4] For the 2014 attainment year and maintenance plan base year, Pennsylvania used EPA's National Emissions Inventory (NEI) to fulfill the requirement for submitting point, nonpoint, and nonroad emissions. Additional technical documentation on the development of the NEI can be found on EPA's NEI website for the 2014 NEI (*https://www.epa.gov/air-emissions-inventories/2014-national-emissions-inventory-nei-data*). Onroad emissions were developed following EPA's MOVES2014 and 2014a Technical Guidance: Using MOVES to Prepare Emissions Inventories for State Implementation Plans and Transportation Conformity.[5] EPA reviewed the inventories following the emissions inventory guidance to insure the emissions submitted fulfilled the requirements set forth for maintenance and projected inventories.

Comment 7: The commenter states that EPA neglected to provide a detailed review of the Motor Vehicle Emission Simulator (MOVES) modeling files and supporting documents used in the development of the emissions inventories. Specifically, they note that the sample files include compressed natural gas (CNG) and ethanol (E85) selections. The commenter argues that the areas surrounding Delaware and Lancaster Counties do not contain E85 or CNG filling stations, making those selections in the modeling files inappropriate. Further, they contend that modeling file selections for ''urban'' road type should not have been made for the primarily rural areas included in the analysis.

EPA Response 7: To clarify, Pennsylvania's redesignation requests and associated maintenance plans are for Delaware and Lebanon Counties, not Lancaster County as stated by the commenter. Therefore, EPA will address the commenter's concerns as applying to Delaware and Lebanon counties, as Lancaster County is not the subject of this rulemaking action.

EPA disagrees with the commenter's characterization of whether a necessary review of modeling files supporting the redesignation request was performed. As stated in EPA's MVEB TSD [6] at section III, Review of the Submitted Modeling Utilizing the Motor Vehicle Emission Simulator (MOVES2014a), EPA reviewed all modeling files and methodologies provided by Pennsylvania and found them appropriate and consistent with relevant EPA guidance. Specifically, the commenter notes cases where the modeling files appear to indicate: (1) Types of fuels that are not distributed in Lebanon and Delaware counties, and (2) road types that do not exist in Lebanon and Delaware counties. However, the selections made in the ''Sample Input Files.PDF'' supporting documents included in Pennsylvania's submittal are entirely consistent with the EPA's ''MOVES2014, MOVES2014a, and MOVES2014b Technical Guidance: Using MOVES to Prepare Emission Inventories for State Implementation Plans and Transportation Conformity'' (referred to as MOVES Technical Guidance).[7] Section 3.5 of EPA's MOVES Technical Guidance states, ''For SIP and regional conformity analyses, users should select all fuel types and all vehicle types to properly estimate an emissions inventory.'' Pennsylvania correctly followed the MOVES Technical Guidance and selected all vehicles and all fuel types. Section 3.6 of EPA's MOVES Technical Guidance recommends that ''users should select all road types,'' regardless of whether such roads exist in the county being modeled. This is to ensure that all possible activity is captured, as it is possible to ''lose'' vehicle miles traveled if all roads are not selected in MOVES. Pennsylvania correctly selected all road types. Additionally, for all other selections made in the modeling files provided, as well as the modeling decisions documented in Pennsylvania's submittal, EPA similarly compared those with the relevant sections of the MOVES Technical Guidance. For this redesignation request, it was determined by EPA that the appropriate modeling selections were made, and the resulting mobile source inventory was sufficient to meet the relevant CAA requirements.

IV. Final Action

EPA's review of the records for these redesignation requests indicates that the Delaware and Lebanon Areas meet the requirements for redesignation to attainment for the 2012 annual $PM_{2.5}$ NAAQS. Therefore, EPA is granting PADEP's redesignation requests and determining that the Delaware and Lebanon Areas meet the 2012 annual $PM_{2.5}$ NAAQS. The effect of this final action is to change the designation status of the Delaware and Lebanon Areas from nonattainment to attainment for the 2012 annual $PM_{2.5}$ NAAQS, thereby removing the requirement for a nonattainment new source review permitting program and stopping the sanctions clock associated with a finding of failure to submit NNSR updates for the 2012 annual $PM_{2.5}$ NAAQS. EPA is also approving PADEP's maintenance plans for the Delaware and Lebanon Areas as revisions to the Pennsylvania SIP. EPA is also finding the 2014, 2022, and 2030 $PM_{2.5}$ and NO_X MVEBs contained in the maintenance plans for the Delaware and Lebanon Areas adequate and approving these MVEBs into the Pennsylvania SIP for transportation conformity purposes.

V. Statutory and Executive Order Reviews

A. General Requirements

Under the CAA, redesignation of an area to attainment and the

[3] This guidance document is available online on EPA's Air Emissions Inventories website, at *https://www.epa.gov/air-emissions-inventories/air-emissions-inventory-guidance-implementation-ozone-and-particulate.*

[4] This guidance document is in the docket for this action, available online at *https://www.regulations.gov,* Docket ID: EPA–R03–OAR–2019–0262.

[5] This guidance document is available online at *https://nepis.epa.gov/Exe/ZyPDF.cgi?Dockey=P100V7EY.pdf.*

[6] EPA's MVEB TSD, ''Adequacy Findings for the Motor Vehicle Emissions Budgets (MVEBs) in the 2012 Fine Particulate Matter ($PM_{2.5}$) National Ambient Air Quality Standard (NAAQS) Maintenance Plan for the Lebanon County, Pennsylvania (PA) 2012 $PM_{2.5}$ Nonattainment Area'' is available online at *https://www.regulations.gov,* Docket ID: EPA–R03–OAR–2019–0262.

[7] For more information, see ''MOVES2014, MOVES2014a, and MOVES2014b Technical Guidance: Using MOVES to Prepare Emission Inventories for State Implementation Plans and Transportation Conformity'', Assessment and Standards Division, Office of Transportation and Air Quality, U.S. Environmental Protection Agency, August 2018, available online at *https://nepis.epa.gov/Exe/ZyPDF.cgi?Dockey=P100V7EY.pdf.*

accompanying approval of the maintenance plan under CAA section 107(d)(3)(E) are actions that affect the status of geographical areas and do not impose any additional regulatory requirements on sources beyond those required by state law. A redesignation to attainment does not in and of itself impose any new requirements, but rather results in the application of requirements contained in the CAA for areas that have been redesignated to attainment. Moreover, the Administrator is required to approve a SIP submission that complies with the provisions of the Act and applicable Federal regulations. 42 U.S.C. 7410(k); 40 CFR 52.02(a). Thus, in reviewing SIP submissions, EPA's role is to approve state choices, provided that they meet the criteria of the CAA. Accordingly, this action merely approves state law as meeting Federal requirements and does not impose additional requirements beyond those imposed by state law. For that reason, this action:

- Is not a ''significant regulatory action'' subject to review by the Office of Management and Budget under Executive Orders 12866 (58 FR 51735, October 4, 1993) and 13563 (76 FR 3821, January 21, 2011);
- Is not an Executive Order 13771 (82 FR 9339, February 2, 2017) regulatory action because SIP approvals are exempted under Executive Order 12866.
- Does not impose an information collection burden under the provisions of the Paperwork Reduction Act (44 U.S.C. 3501 *et seq.*);
- Is certified as not having a significant economic impact on a substantial number of small entities under the Regulatory Flexibility Act (5 U.S.C. 601 *et seq.*);
- Does not contain any unfunded mandate or significantly or uniquely affect small governments, as described in the Unfunded Mandates Reform Act of 1995 (Pub. L. 104–4);
- Does not have Federalism implications as specified in Executive Order 13132 (64 FR 43255, August 10, 1999);
- Is not an economically significant regulatory action based on health or safety risks subject to Executive Order 13045 (62 FR 19885, April 23, 1997);
- Is not a significant regulatory action subject to Executive Order 13211 (66 FR 28355, May 22, 2001);
- Is not subject to requirements of Section 12(d) of the National Technology Transfer and Advancement Act of 1995 (15 U.S.C. 272 note) because application of those requirements would be inconsistent with the CAA; and
- Does not provide EPA with the discretionary authority to address, as appropriate, disproportionate human health or environmental effects, using practicable and legally permissible methods, under Executive Order 12898 (59 FR 7629, February 16, 1994).

In addition, this rule does not have tribal implications as specified by Executive Order 13175 (65 FR 67249, November 9, 2000), because the SIP is not approved to apply in Indian country located in the state, and EPA notes that it will not impose substantial direct costs on tribal governments or preempt tribal law.

B. Submission to Congress and the Comptroller General

The Congressional Review Act, 5 U.S.C. 801 *et seq.,* as added by the Small Business Regulatory Enforcement Fairness Act of 1996, generally provides that before a rule may take effect, the agency promulgating the rule must submit a rule report, which includes a copy of the rule, to each House of the Congress and to the Comptroller General of the United States. EPA will submit a report containing this action and other required information to the U.S. Senate, the U.S. House of Representatives, and the Comptroller General of the United States prior to publication of the rule in the **Federal Register**. A major rule cannot take effect until 60 days after it is published in the **Federal Register**. This action is not a ''major rule'' as defined by 5 U.S.C. 804(2).

C. Petitions for Judicial Review

Under section 307(b)(1) of the CAA, petitions for judicial review of this action must be filed in the United States Court of Appeals for the appropriate circuit by November 29, 2019. Filing a petition for reconsideration by the Administrator of this final rule does not affect the finality of this action for the purposes of judicial review nor does it extend the time within which a petition for judicial review may be filed, and shall not postpone the effectiveness of such rule or action. This action, approving Pennsylvania's redesignation requests and maintenance plans for the 2012 $PM_{2.5}$ NAAQS for the Delaware and Lebanon Areas may not be challenged later in proceedings to enforce its requirements. (See section 307(b)(2).)

List of Subjects

40 CFR Part 52

Environmental protection, Air pollution control, Carbon monoxide, Incorporation by reference, Intergovernmental relations, Lead, Nitrogen dioxide, Ozone, Particulate matter, Reporting and recordkeeping requirements, Sulfur oxides, Volatile organic compounds.

40 CFR Part 81

Environmental protection, Air pollution control, National parks, Wilderness areas.

Dated: September 13, 2019.

Diana Esher,

Acting Regional Administrator, Region III.

40 CFR parts 52 and 81 are amended as follows:

PART 52—APPROVAL AND PROMULGATION OF IMPLEMENTATION PLANS

■ 1. The authority citation for part 52 continues to read as follows:

Authority: 42 U.S.C. 7401 *et seq.*

Subpart NN—Pennsylvania

■ 2. In § 52.2020, the table in paragraph (e)(1) is amended by adding entries for ''Delaware County 2012 annual $PM_{2.5}$ maintenance plan'' and ''Lebanon County 2012 annual $PM_{2.5}$ maintenance plan'' at the end of the table to read as follows:

§ 52.2020 Identification of plan.

* * * * *

(e) * * *

(1) * * *

Name of non-regulatory SIP revision	Applicable geographic area	State submittal date	EPA approval date	Additional explanation
*	*	*	*	*
Delaware County 2012 annual $PM_{2.5}$ maintenance plan.	Delaware County	1/23/19	9/30/19 [*Insert **Federal Register** citation*].	
Lebanon County 2012 annual $PM_{2.5}$ maintenance plan.	Lebanon County	2/11/19	9/30/19 [*Insert **Federal Register** citation*].	

* * * * *

■ 3. Section 52.2059 is amended by adding paragraphs (x) and (y) to read as follows:

§ 52.2059 Control strategy: Particulate matter.

* * * * *

(x) EPA approves the maintenance plan for the Delaware County nonattainment area for the 2012 annual fine particulate matter ($PM_{2.5}$) NAAQS submitted by the Commonwealth of Pennsylvania on January 23, 2019. The maintenance plan includes the 2014, 2022, and 2030 $PM_{2.5}$ and nitrogen oxides (NO_X) mobile vehicle emissions budgets (MVEBs) to be applied to all future transportation conformity determinations and analyses for the Delaware County area for the 2012 annual $PM_{2.5}$ NAAQS.

DELAWARE COUNTY AREA'S MOTOR VEHICLE EMISSION BUDGETS FOR THE 2012 ANNUAL NAAQS IN TONS PER YEAR

Type of control strategy SIP	Year	$PM_{2.5}$	NO_X	Effective date of SIP approval
Maintenance Plan	2014	136	4,652	September 30, 2019.
	2022 Predicted	75	1,833	
	Safety Margin	4	183	
	2022 Budget	79	2,016	
	2030 Predicted	53	869	
	Safety Margin	0	87	
	2030 Budget	53	956	

(y) EPA approves the maintenance plan for the Lebanon County nonattainment area for the 2012 annual fine particulate matter ($PM_{2.5}$) NAAQS submitted by the Commonwealth of Pennsylvania on February 11, 2019. The maintenance plan includes the 2014, 2022, and 2030 $PM_{2.5}$ and nitrogen oxides (NO_X) mobile vehicle emissions budgets (MVEBs) to be applied to all future transportation conformity determinations and analyses for the Lebanon County area for the 2012 annual $PM_{2.5}$ NAAQS.

LEBANON COUNTY AREA MOTOR VEHICLE EMISSION BUDGETS FOR THE 2012 ANNUAL NAAQS IN TONS PER YEAR

Type of control strategy SIP	Year	$PM_{2.5}$	NO_X	Effective date of SIP approval
Maintenance Plan	2014	87	3,131	September 30, 2019.
	2022 Predicted	45	1,697	
	Safety Margin	5	170	
	2022 Budget	50	1,867	
	2030 Predicted	28	1,249	
	Safety Margin	3	125	
	2030 Budget	31	1,374	

* * * * *

PART 81—DESIGNATION OF AREAS FOR AIR QUALITY PLANNING PURPOSES

■ 4. The authority citation for part 81 continues to read as follows:

Authority: 42 U.S.C. 7401, *et seq.*

Subpart C—Section 107 Attainment Status Designations

■ 5. In § 81.339, the table ''Pennsylvania—2012 Annual $PM_{2.5}$ NAAQS (Primary)'' is amended by revising the entries for ''Delaware County, PA'' and ''Lebanon County, PA'' to read as follows:

§ 81.339 Pennsylvania.

* * * * *

PENNSYLVANIA—2012 ANNUAL $PM_{2.5}$ NAAQS (PRIMARY)

Designated area [1]	Designation		Classification	
	Date [2]	Type	Date [2]	Type
*	*	*	*	*	*	*
Delaware County, PA:						
Delaware County	October 30, 2019	Attainment.				
Lebanon County, PA:						
Lebanon County	October 30, 2019	Attainment.				
*	*	*	*	*	*	*

[1] Includes areas of Indian country located in each county or area, except as otherwise specified.
[2] This date is April 15, 2015, unless otherwise noted.

* * * * *

[FR Doc. 2019–20675 Filed 9–27–19; 8:45 am]

BILLING CODE 6560–50–P

DEPARTMENT OF TRANSPORTATION

Federal Motor Carrier Safety Administration

49 CFR Parts 325, 350, 365, 380, 382, 383, 385, 387, 389, 391, 392, 395, and 396

RIN 2126–AC27

General Technical, Organizational, Conforming, and Correcting Amendments to the Federal Motor Carrier Safety Regulations

AGENCY: Federal Motor Carrier Safety Administration (FMCSA), DOT.

ACTION: Final rule.

SUMMARY: FMCSA amends its regulations by making technical corrections throughout the Federal Motor Carrier Safety Regulations. The Agency makes minor changes to correct inadvertent errors and omissions, remove or update obsolete references, and improve the clarity and consistency of certain regulatory provisions. The Agency also makes nondiscretionary, ministerial changes that are statutorily mandated.

DATES: Effective September 30, 2019.

FOR FURTHER INFORMATION CONTACT: Ms. Sarah Stella, Federal Motor Carrier Safety Administration, Regulatory Development Division, 1200 New Jersey Avenue SE, Washington, DC 20590–0001; (202) 366–5370; *sarah.stella@dot.gov.*

SUPPLEMENTARY INFORMATION:

I. Legal Basis for the Rulemaking

Congress delegated certain powers to regulate interstate commerce to the United States Department of Transportation (DOT or Department) in numerous pieces of legislation, most notably in section 6 of the Department of Transportation Act (DOT Act) (Pub. L. 89–670, 80 Stat. 931, 937, Oct. 15, 1966). Section 6 of the DOT Act transferred to the Department the authority of the former Interstate Commerce Commission (ICC) to regulate the qualifications and maximum hours of service of employees, the safety of operations, and the equipment of motor carriers in interstate commerce (80 Stat. 939). This authority, first granted to the ICC in the Motor Carrier Act of 1935 (Pub. L. 74–255, 49 Stat. 543, Aug. 9, 1935), now appears in 49 U.S.C. chapter 315. The regulations issued under this (and subsequently enacted) authority became known as the Federal Motor Carrier Safety Regulations, codified at 49 CFR parts 350–399. The administrative powers to enforce chapter 315 (codified in 49 U.S.C. chapter 5) were also transferred from the ICC to the DOT in 1966, and assigned first to the Federal Highway Administration (FHWA) and then to FMCSA. The FMCSA Administrator has been delegated authority under 49 CFR 1.87 to carry out the motor carrier functions vested in the Secretary of Transportation.

Between 1984 and 1999, several statutes added to FHWA's authority. Various statutes authorize the enforcement of the Federal Motor Carrier Safety Regulations, the Hazardous Materials Regulations, and the Commercial Regulations, and provide both civil and criminal penalties for violations of these requirements. These statutes include the Motor Carrier Safety Act of 1984 (Pub. L. 98–554, 98 Stat. 2832, Oct. 30, 1984), codified at 49 U.S.C. chapter 311, subchapter III; the Commercial Motor Vehicle Safety Act of 1986 (Pub. L. 99–570, 100 Stat. 3207–170, Oct. 27, 1986), codified at 49 U.S.C. chapter 313; the Hazardous Materials Transportation Uniform Safety Act of 1990, as amended (Pub. L. 101–615, 104 Stat. 3244, Nov. 16, 1990), codified at 49 U.S.C. chapter 51; the Omnibus Transportation Employee Testing Act of 1991 (Pub. L. 102–143, Title V, 105 Stat. 917, 952, Oct. 28, 1991), codified at 49 U.S.C. 31306; and the ICC Termination Act of 1995 (Pub. L. 104–88, 109 Stat. 803, Dec. 29, 1995), codified at 49 U.S.C. chapters 131–149.

The Motor Carrier Safety Improvement Act of 1999 (Pub. L. 106–159, 113 Stat. 1748, Dec. 9, 1999) established FMCSA as a new operating administration within DOT, effective January 1, 2000. The motor carrier safety responsibilities previously assigned to both the ICC and FHWA are now assigned to FMCSA.

Congress expanded, modified, and amended FMCSA's authority in the Uniting and Strengthening America by Providing Appropriate Tools Required to Intercept and Obstruct Terrorism (USA PATRIOT) Act of 2001 (Pub. L. 107–56, 115 Stat. 272, Oct. 26, 2001); the Safe, Accountable, Flexible, Efficient Transportation Equity Act: A Legacy for Users (SAFETEA–LU) (Pub. L. 109–59, 119 Stat. 1144, Aug. 10, 2005); the SAFETEA–LU Technical Corrections Act of 2008 (Pub. L. 110–244, 122 Stat. 1572, June 6, 2008); the Moving Ahead for Progress in the 21st Century Act (Pub. L. 112–141, 126 Stat. 405, July 6, 2012); and the Fixing America's Surface Transportation Act (Pub. L. 114–94, 129 Stat. 1312, Dec. 4, 2015).

In addition, the Agency derives secondary authority from section 205 of the Financial Institutions Reform, Recovery, and Enforcement Act of 1989 (Pub. L. 101–73, 103 Stat. 183, Aug. 9, 1989), and section 12104 of the Agriculture Improvement Act of 2018 (Pub. L. 115–334, 132 Stat. 4490, Dec. 20, 2018), as they pertain to financial responsibility requirements for property brokers and drivers transporting agricultural commodities, respectively.

The specific regulations amended by this rule are based on the statutes detailed above. Generally, the legal authority for each of those provisions was explained when the requirement was originally adopted and is noted at the beginning of each part in title 49 of the Code of Federal Regulations.

The Administrative Procedure Act (APA) specifically provides exceptions to its notice and comment rulemaking procedures when an agency finds there is good cause to dispense with them, and incorporates the finding, and a brief statement of reasons therefore, in the rules issued (5 U.S.C. 553(b)(3)(B)). Generally, good cause exists when an agency determines that notice and public comment procedures are impractical, unnecessary, or contrary to the public interest. The amendments made in this final rule primarily correct inadvertent errors and omissions, remove or update obsolete references, and make minor language changes to improve clarity and consistency. Two changes are statutorily mandated. In accommodating those changes, the Agency is performing nondiscretionary, ministerial acts. The technical amendments do not impose any material new requirements or increase compliance obligations. For these reasons, FMCSA finds good cause that notice and public comment on this final rule are unnecessary.

The APA also allows agencies to make rules effective immediately with good cause (5 U.S.C. 553(d)(3)), instead of requiring publication 30 days prior to the effective date. For the reasons already stated, FMCSA finds there is good cause for this rule to be effective immediately.

The Agency is aware of the regulatory requirements concerning public participation in FMCSA rulemaking (49 U.S.C. 31136(g)). These requirements pertain to certain major rules,[1] but,

[1] A "major rule" means any rule that the Administrator of the Office of Information and

Continued

because this final rule is not a major rule, they are not applicable. In any event, the Agency finds that publication of an advance notice of proposed rulemaking under 49 U.S.C. 31136(g)(1)(A), as well as a negotiated rulemaking under 49 U.S.C. 31136(g)(1)(B), is unnecessary and contrary to the public interest in accordance with the waiver provision in 49 U.S.C. 31136(g)(3).

II. Section-by-Section Analysis

The section-by-section analysis describes the changes to the Code of Federal Regulations in numerical order.

A. Section 325.3 Effective Date

FMCSA removes and reserves § 325.3, Effective date. Part 325 became effective October 15, 1975. Because it has been in effect for 43 years, the notice in this section is no longer necessary and the section is obsolete.

B. Section 350.213 What must a State CVSP include?

FMCSA corrects the cross reference at the end of § 350.213(b) that now reads ''§ 350.201(q) and (t)'' to read ''§ 350.201(q) and (s).'' On October 14, 2016, FMCSA revised § 350.201 in a final rule titled ''Amendments to Implement Grants Provisions of the Fixing America's Surface Transportation Act'' (81 FR 71011). The provisions formerly in paragraph (t) were revised and moved to paragraph (s), but the Agency failed to correct the cross reference at that time.

C. Sections 365.203 (Suspended) and 365.203T Time for Filing

In § 365.203 (suspended), FMCSA removes the reference to ''Office of the Associate Administrator for Research and Information Technology,'' and replaces it with a reference to the ''Office of Registration and Safety Information (MC–RS).'' The Office of Registration and Safety Information is now the office responsible for receiving these protests. In § 365.203T, FMCSA adds a reference to the Office of Registration and Safety Information and its address to clarify how protests must be filed.

On January 17, 2017, FMCSA suspended certain regulations relating to the electronic Unified Registration System and delayed their effective date indefinitely (82 FR 5292). The suspended regulations were replaced by temporary provisions that contain the requirements in place on January 13, 2017. Section 365.203 was one of the sections suspended and § 365.203T, which is currently in effect, was added (82 FR 5300).

D. Section 380.725 Documentation and Record Retention

In § 380.725(a), FMCSA changes the reference that now reads ''subpart F'' to read ''subpart G.'' The error appeared in the rule when it was published on December 8, 2016 (81 FR 88793.)

E. Section 382.107 Definitions

FMCSA amends the definition of ''actual knowledge'' in § 382.107 by removing the words ''a traffic citation for'' and adding in their place the words ''a traffic citation, complaint, or other document charging.'' The entire phrase will read ''a traffic citation, complaint, or other document charging driving a CMV while under the influence of alcohol or controlled substances.''

The purpose of the amendment is to clarify that, as used in this section, the Agency considers ''traffic citation'' to be a broad term encompassing all documents charging driving a CMV while under the influence of alcohol or controlled substances. Therefore, an employer's knowledge of any type of document charging the driver with operating a CMV while under the influence of drugs or alcohol provides a sufficient basis for that employer's ''actual knowledge,'' as that term is defined in § 382.107, that the employee-driver has violated subpart B of part 382.

F. Section 383.25 Commercial Learner's Permit (CLP)

FMCSA corrects an error in § 383.25(c). FMCSA revised § 383.25(c), as well as § 383.73(a)(2)(iii), on December 21, 2018 (83 FR 65571). These provisions allow CLPs to be issued for 1 year or less from the date of issuance without requiring a CLP holder to retake the general and endorsement knowledge tests. Section 383.25(c) provides that ''CLPs issued for a period of less than 1 year may be renewed provided the CLP is not valid for no more than one year from the date of initial issuance.'' The word ''no'' is removed from § 383.25(c) to eliminate the inadvertent double negative and to ensure that the language is consistent with that of § 383.73(a)(2)(iii).

G. Section 385.13 Unsatisfactory Rated Motor Carriers; Prohibition on Transportation; Ineligibility for Federal Contracts

FMCSA updates the web address in paragraph (a) (*http://www.safersys.org*), which is no longer active, to the current FMCSA Safety and Fitness Electronic Records System address at *https://safer.fmcsa.dot.gov.* In paragraphs (a)(2) and (c) of § 385.13, FMCSA removes the effective dates (November 20, 2000 and January 22, 2001, respectively) to improve the clarity of the section. When these dates were originally published on August 22, 2000 (65 FR 50934), they were informative. However, they are now obsolete.

H. Section 385.19 Safety Fitness Information

In § 385.19(c), FMCSA changes the office where requests should be addressed from the ''Office of Information Technology (MC–R)'' to the ''Office of Registration and Safety Information (MC–RS).'' This reflects a change in organization. The Agency also updates paragraph (c) to provide the current FMCSA Safety and Fitness Electronic Records System address at *https://safer.fmcsa.dot.gov,* and corrects a grammatical error.

I. Section 385.403 Who must hold a safety permit?

FMCSA removes the phrase ''[a]fter the date following January 1, 2005, that a motor carrier is required to file a Motor Carrier Identification Report Form (MCS–150) according to the schedule set forth in § 390.19(a) of this chapter'' from the introductory text of § 385.403 to improve the clarity of the section. This compliance information was provided when part 385, subpart E, Hazardous Materials Safety Permits, was adopted on June 30, 2004 (69 FR 39368), but it is no longer necessary.

J. Sections 385.405 (Suspended) and 385.405T How does a motor carrier apply for a safety permit?

FMCSA changes paragraph (b) of § 385.405 (suspended) to accurately reflect the online application procedures. Paragraph (b) of § 385.405T is changed by replacing the reference to the Office of Information Technology (MC–R) with a reference to the Office of Registration and Safety Information (MC–RS), the office now responsible for the forms and instructions.

Regulatory Affairs of the Office of Management and Budget (OMB) finds has resulted in or is likely to result in (a) an annual effect on the economy of $100 million or more; (b) a major increase in costs or prices for consumers, individual industries, Federal agencies, State agencies, local government agencies, or geographic regions; or (c) significant adverse effects on competition, employment, investment, productivity, innovation, or on the ability of United States-based enterprises to compete with foreign-based enterprises in domestic and export markets (5 U.S.C. 804(2)). The term ''major rule'' does not include any rule promulgated under the Telecommunications Act of 1996 and the amendments made by that Act.

K. Section 385.417 Is a motor carrier's safety permit number available to others?

FMCSA updates the obsolete web address in § 385.417 to the current FMCSA Safety and Fitness Electronic Records System address at *https://safer.fmcsa.dot.gov,* and corrects a grammatical error.

L. Appendix B to Part 385—Explanation of Safety Rating Process

FMCSA revises Appendix B to Part 385, section VII, to correct two entries. The entry for ''§ 382.213(b) Using a driver known to have used a controlled substance (acute)'' is changed to read ''§ 382.213(c) Using a driver known to have used a controlled substance (acute).'' On January 30, 2012, FMCSA adopted a revision to § 382.213 that moved the information previously in paragraph (b) to paragraph (c) (77 FR 4483).

The entry for ''§ 391.45(b)(1) Using a driver not medically examined and certified during the preceding 24 months (critical)'' is corrected to read ''§ 391.45(b) Using a driver not medically examined and certified during the preceding 24 months (critical).'' Section 391.45 was revised and reorganized by a rule published September 19, 2018, which moved the requirements in § 391.45(b)(1) to paragraph (b) (83 FR 47520).

M. Sections 387.303 (Suspended) and 387.303T Security for the Protection of the Public: Minimum Limits

FMCSA corrects the inaccurate cross references in §§ 387.303(b)(2)(iii) (suspended) and 387.303T(b)(2)(iii). Prior to October 1, 2012, the paragraphs of the table in § 387.303(b)(2) were designated as paragraphs (a), (b), (c), and (d). On October 1, 2012, they were redesignated as paragraphs (b)(2)(i), (ii), (iii), and (iv), but the Agency failed to make conforming changes to the cross references in redesignated paragraph (b)(2)(iii) (77 FR 59827). Accordingly, the cross references to paragraph (b) or (d) are changed to paragraph (b)(2)(ii) or (iv). These changes make the language in the tables in §§ 387.303(b)(2) (suspended) and 387.303T(b)(2) consistent.

N. Section 387.307 Property Broker Surety Bond or Trust Fund

Section 387.307(c)(4) defines a financial institution to include an ''insured institution (as defined in section 401(a) of the National Housing Act (12 U.S.C. 1724(a)).'' The National Housing Act (Pub. L. 73–479, 48 Stat. 1246, 1255, June 27, 1934) defined the term as an institution insured under the Federal Savings and Loan Insurance Corporation (FSLIC).

The Financial Institutions Reform, Recovery, and Enforcement Act of 1989 (Reform Act) (Pub. L. 101–73, secs. 401 and 407, 103 Stat. 183, 354, 363, Aug. 9, 1989) abolished the FSLIC and repealed title 4 of the National Housing Act (12 U.S.C. 1724 *et seq.*). The Reform Act amended section 4 of the Federal Deposit Insurance Act (12 U.S.C. 1814(a)(2)) to provide that each savings association insured by the FSLIC would automatically become an ''insured depository institution'' (sec. 205, 103 Stat. 194). That term is defined in section 3(c)(2) of the Federal Deposit Insurance Act to mean any bank or savings association the deposits of which are insured by the Federal Deposit Insurance Corporation (12 U.S.C. 1813(c)(2)). Accordingly, the Agency corrects the outdated reference in § 387.307(c)(4), as mandated by the Reform Act, to read, ''An insured depository institution (as defined in section 3(c)(2) of the Federal Deposit Insurance Act (12 U.S.C. 1813(c)(2)).''

O. Sections 387.313 (Suspended) and 387.313T Forms and Procedures Sections 387.413 (Suspended) and 387.413T Forms and Procedures

The Agency removes paragraph (f) from §§ 387.313 (suspended), 387.313T, 387.413 (suspended), and 387.413T, which references Form BMC–32 endorsements and Form BMC–34 certificates of insurance that expired March 21, 2011. Paragraph (f) was added to §§ 387.313 and 387.413 to provide notice that these forms would expire (75 FR 35328–29, June 22, 2010), but it is now obsolete.

FMCSA also revises the heading of § 387.413 (suspended) to read ''Forms and procedures,'' rather than ''Forms and procedure,'' to be consistent with the headings of §§ 387.313 (suspended), 387.313T, and 387.413T.

P. Section 389.9 Treatment of Confidential Business Information Submitted Under Confidential Class Determinations

FMCSA changes the heading of § 389.9 by adding the phrase ''submitted under confidential class determinations'' to make clear to the reader initially that the procedures in the section apply only to certain forms of confidential business information. At the end of paragraph (a), the Agency adds a cross reference to paragraph (f) of this section to clarify the applicability of the procedures set forth in § 389.9.

Q. Section 391.41 Physical Qualifications for Drivers

In § 391.41(a)(1)(i), FMCSA amends the note to reflect that the commercial drivers' license reciprocity memorandum of understanding with Mexico was amended as of January 19, 2017.

R. Section 391.46 Physical Qualification Standards for an Individual With Diabetes Mellitus Treated With Insulin for Control

In § 391.46(c)(2)(iv), FMCSA corrects the cross reference to ''paragraph (c)(iv)'' to read ''paragraph (c)(2)(iii).'' On September 19, 2018, the Agency published a new standard for individuals with insulin-treated diabetes that added § 391.46, but inadvertently provided the wrong citation (83 FR 47520).

S. Section 391.51 General Requirements for Driver Qualifications Files

FMCSA removes the expired effective date (January 30, 2012) from the beginning of § 391.51(b)(7)(ii). On December 1, 2008, FMCSA published a rule that revised § 391.51(b)(7)(ii) (73 FR 73127). The paragraph included the effective date of the exception, then 3 years in the future, for the information of the user. It is now obsolete.

T. Section 391.53 Driver Investigation History File

FMCSA removes the compliance date (October 29, 2004) from § 391.53(a). This compliance date was added to aid the user when the section was added on March 30, 2004 (69 FR 16721). It is now 15 years in the past and no longer necessary.

In paragraph (b)(1) of § 391.53, FMCSA corrects the cross reference to ''§ 391.23(d)'' to read ''§ 391.23(f)(1),'' which relates to driver consent. This cross reference was incorrect when the rule was originally published.

U. Section 392.10 Railroad Grade Crossings; Stopping Required

FMCSA corrects the punctuation in § 392.10(b) by changing the ending punctuation in paragraphs (b)(2) and (4) to periods. This is to make the punctuation consistent.

V. Section 395.1 Scope of Rules in This Part

FMCSA corrects the cross reference in paragraph (a)(1) of § 395.1 to read ''paragraphs (b) through (x) of this section,'' rather than ''(b) through (r) of this section.'' Inadvertently, FMCSA failed to update this cross reference when § 395.1(s) was added on March 14,

2013 (78 FR 16195), and when paragraphs (t) through (x) of § 395.1 were added on July 22, 2016 (81 FR 47721).

W. Section 395.2 Definitions

In § 395.2, FMCSA amends the definition of ''livestock'' by replacing the phrase ''fish used for food, and other animals designated by the Secretary of Agriculture'' with the phrase ''llamas, alpacas, live fish, crawfish, and other animals'' to reflect a statutory change to the definition.

Section 4130(c) of SAFETEA–LU added a definition for the term ''agricultural commodity,'' and defined it as ''any agricultural commodity, non-processed food, feed, fiber, or livestock (including livestock as defined in section 602 of the Emergency Livestock Feed Assistance Act of 1988 (7 U.S.C. 1471) and insects)'' (119 Stat. 1743 (49 U.S.C. 31136 note)). On July 5, 2007, FMCSA amended § 395.2 by adopting the definition of ''agricultural commodity'' set forth in section 4130(c) without substantive change (72 FR 36790).

On July 22, 2016, the Agency amended § 395.2 by adding a definition for the term ''livestock'' (81 FR 47721). The definition restated, without substantive change, the definition of livestock set forth in section 602 of the Emergency Livestock Feed Assistance Act of 1988 (Pub. L. 100–387, 102 Stat. 925, 926, Aug. 11, 1988 (7 U.S.C. 1471(2)), as amended.

In section 12104 of the Agriculture Improvement Act of 2018 (''2018 farm bill'') (Pub. L. 115–334, 132 Stat. 4490, Dec. 20, 2018), Congress amended the definition of ''livestock'' in the Emergency Livestock Feed Assistance Act of 1988. The 2018 farm bill deleted the phrase ''fish used for food,'' added ''llamas, alpacas, live fish, and crawfish,'' and removed certain discretion from the Secretary of Agriculture. This statutory change was self-executing. Accordingly, FMCSA amends § 395.2 to conform to the statutorily mandated changes made to the definition of ''livestock'' by the 2018 farm bill, which were effective December 20, 2018.

X. Section 396.15 Driveaway-Towaway Operations and Inspections

In § 396.15(a), FMCSA removes the effective date (December 7, 1989), which was added when paragraph (a) was revised on December 7, 1988 (53 FR 49410). This rule has now been in effect for 29 years; therefore, the effective date is no longer necessary.

III. Regulatory Analyses

A. Executive Order (E.O.) 12866 (Regulatory Planning and Review), E.O. 13563 (Improving Regulation and Regulatory Review), and DOT Regulatory Policies and Procedures

FMCSA determined that this final rule is not a significant regulatory action under section 3(f) of E.O. 12866 (58 FR 51735, Oct. 4, 1993), Regulatory Planning and Review, as supplemented by E.O. 13563 (76 FR 3821, Jan. 21, 2011), Improving Regulation and Regulatory Review, and does not require an assessment of potential costs and benefits under section 6(a)(3) of that Order. Accordingly, OMB has not reviewed it under that Order. It is also not significant within the meaning of DOT regulatory policies and procedures (DOT Order 2100.6, dated Dec. 20, 2018). This final rule makes changes to correct inaccurate references and citations, improve clarity, fix typographical or other nonsubstantive errors, or make nondiscretionary, ministerial changes that are statutorily mandated. None of the changes in this final rule imposes material new requirements or increases compliance obligations; therefore, this final rule imposes no new costs and a full regulatory evaluation is unnecessary.

B. E.O. 13771 (Reducing Regulation and Controlling Regulatory Costs)

This rulemaking is not an E.O. 13771 regulatory action and no further action under E.O. 13771 is required.

C. Congressional Review Act

This rule is not a major rule as defined under the Congressional Review Act (5 U.S.C. 801–808).

D. Regulatory Flexibility Act (Small Entities)

Under the Regulatory Flexibility Act of 1980 (5 U.S.C. 601–612), FMCSA is not required to complete a regulatory flexibility analysis because, as discussed earlier in the Legal Basis for the Rulemaking section, this action is not subject to notice and public comment under section 553(b) of the APA.

E. Assistance for Small Entities

In accordance with section 213(a) of the Small Business Regulatory Enforcement Fairness Act of 1996, FMCSA wants to assist small entities in understanding this final rule so that they can better evaluate its effects and participate in the rulemaking initiative. If the final rule will affect your small business, organization, or governmental jurisdiction and you have questions concerning its provisions or options for compliance; please consult the FMCSA point of contact, Sarah Stella, listed in the **FOR FURTHER INFORMATION CONTACT** section of this final rule.

Small businesses may send comments on the actions of Federal employees who enforce or otherwise determine compliance with Federal regulations to the Small Business Administration's Small Business and Agriculture Regulatory Enforcement Ombudsman and the Regional Small Business Regulatory Fairness Boards. The Ombudsman evaluates these actions annually and rates each agency's responsiveness to small business. If you wish to comment on actions by employees of FMCSA, call 1–888–REG–FAIR (1–888–734–3247). DOT has a policy regarding the rights of small entities to regulatory enforcement fairness and an explicit policy against retaliation for exercising these rights.

F. Unfunded Mandates Reform Act of 1995

The Unfunded Mandates Reform Act of 1995 (2 U.S.C. 1531–1538) requires Federal agencies to assess the effects of their discretionary regulatory actions. In particular, the Act addresses actions that may result in the expenditure by State, local, and tribal governments, in the aggregate, or by the private sector of $165 million (which is the value equivalent of $100,000,000 in 1995, adjusted for inflation to 2018 levels) or more in any 1 year. This final rule will not result in such an expenditure.

G. Paperwork Reduction Act (Collection of Information)

This final rule calls for no new collection of information under the Paperwork Reduction Act of 1995 (44 U.S.C. 3501–3520).

H. E.O. 13132 (Federalism)

A rule has implications for federalism under section 1(a) of E.O. 13132 if it has ''substantial direct effects on the States, on the relationship between the national government and the States, or on the distribution of power and responsibilities among the various levels of government.'' FMCSA has determined that this rule will not have substantial direct costs on or for States, nor will it limit the policymaking discretion of States. Nothing in this document preempts any State law or regulation. Therefore, this rule does not have sufficient federalism implications to warrant the preparation of a Federalism Impact Statement.

I. E.O. 12988 (Civil Justice Reform)

This final rule meets applicable standards in sections 3(a) and 3(b)(2) of

E.O. 12988, Civil Justice Reform, to minimize litigation, eliminate ambiguity, and reduce burden.

J. E.O. 13045 (Protection of Children)

E.O. 13045, Protection of Children from Environmental Health Risks and Safety Risks (62 FR 19885, Apr. 23, 1997), requires agencies issuing ''economically significant'' rules, if the regulation also concerns an environmental health or safety risk that an agency has reason to believe may disproportionately affect children, to include an evaluation of the regulation's environmental health and safety effects on children. The Agency determined this final rule is not economically significant. Therefore, no analysis of the impacts on children is required. In any event, the Agency does not anticipate that this regulatory action could in any respect present an environmental or safety risk that could disproportionately affect children.

K. E.O. 12630 (Taking of Private Property)

FMCSA reviewed this final rule in accordance with E.O. 12630, Governmental Actions and Interference with Constitutionally Protected Property Rights, and has determined it will not effect a taking of private property or otherwise have taking implications.

L. Privacy

The Consolidated Appropriations Act, 2005 (Pub. L. 108–447, 118 Stat. 2809, 3268, 5 U.S.C. 552a note) requires the Agency to conduct a privacy impact assessment (PIA) of a regulation that will affect the privacy of individuals. Because this final rule does not require the collection of personally identifiable information, the Agency is not required to conduct a PIA.

The E-Government Act of 2002 (Pub. L. 107–347, sec. 208, 116 Stat. 2899, 2921, Dec. 17, 2002), requires Federal agencies to conduct a PIA for new or substantially changed technology that collects, maintains, or disseminates information in an identifiable form. No new or substantially changed technology would collect, maintain, or disseminate information as a result of this rule. Accordingly, FMCSA has not conducted a PIA.

M. E.O. 12372 (Intergovernmental Review)

The regulations implementing E.O. 12372 regarding intergovernmental consultation on Federal programs and activities do not apply to this program.

N. E.O. 13211 (Energy Supply, Distribution, or Use)

FMCSA has analyzed this final rule under E.O. 13211, Actions Concerning Regulations That Significantly Affect Energy Supply, Distribution, or Use. The Agency has determined that it is not a ''significant energy action'' under that order because it is not a ''significant regulatory action'' likely to have a significant adverse effect on the supply, distribution, or use of energy. Therefore, it does not require a Statement of Energy Effects under E.O. 13211.

O. E.O. 13175 (Indian Tribal Governments)

This rule does not have tribal implications under E.O. 13175, Consultation and Coordination with Indian Tribal Governments, because it does not have a substantial direct effect on one or more Indian tribes, on the relationship between the Federal Government and Indian tribes, or on the distribution of power and responsibilities between the Federal Government and Indian tribes.

P. National Technology Transfer and Advancement Act (Technical Standards)

The National Technology Transfer and Advancement Act (15 U.S.C. 272 note) directs agencies to use voluntary consensus standards in their regulatory activities unless the agency provides Congress, through OMB, with an explanation of why using these standards would be inconsistent with applicable law or otherwise impractical. Voluntary consensus standards (*e.g.,* specifications of materials, performance, design, or operation; test methods; sampling procedures; and related management systems practices) are standards that are developed or adopted by voluntary consensus standards bodies. This rule does not use technical standards. Therefore, FMCSA did not consider the use of voluntary consensus standards.

Q. National Environmental Policy Act of 1969

FMCSA analyzed this rule for the purpose of the National Environmental Policy Act of 1969 (42 U.S.C. 4321 *et seq.*) and determined this action is categorically excluded from further analysis and documentation in an environmental assessment or environmental impact statement under FMCSA Order 5610.1 (69 FR 9680, Mar. 1, 2004), Appendix 2, paragraph 6.b. This Categorical Exclusion addresses minor corrections such as those found in this rulemaking; therefore, preparation of an environmental assessment or environmental impact statement is not necessary.

List of Subjects

49 CFR Part 325

Motor carriers, Noise control.

49 CFR Part 350

Grant programs-transportation, Highway safety, Motor carriers, Motor vehicle safety, Reporting and recordkeeping requirements.

49 CFR Part 365

Administrative practice and procedure, Brokers, Buses, Freight forwarders, Maritime carriers, Mexico, Motor carriers, Moving of household goods.

49 CFR Part 380

Administrative practice and procedure, Highway safety, Motor carriers, Reporting and recordkeeping requirements.

49 CFR Part 382

Administrative practice and procedures, Alcohol abuse, Drug abuse, Drug testing, Highway safety, Motor carriers, Penalties, Safety, Transportation.

49 CFR Part 383

Administrative practice and procedures, Alcohol abuse, Drug abuse, Highway safety, Motor carriers.

49 CFR Part 385

Administrative practice and procedure, Highway safety, Mexico, Motor carriers, Motor vehicle safety, Reporting and recordkeeping requirements.

49 CFR Part 387

Buses, Freight, Freight forwarders, Hazardous materials transportation, Highway safety, Insurance, Intergovernmental relations, Motor carriers, Motor vehicle safety, Moving of household goods, Penalties, Reporting and recordkeeping requirements, Surety bonds.

49 CFR Part 389

Administrative practice and procedure, Highway safety, Motor carriers, Motor vehicle safety.

49 CFR Part 391

Alcohol abuse, Drug abuse, Drug testing, Highway safety, Motor carriers, Reporting and recordkeeping requirements, Safety, Transportation.

49 CFR Part 392

Alcohol abuse, Drug abuse, Highway safety, Motor carriers.

49 CFR Part 395

Highway safety, Motor carriers, Reporting and recordkeeping requirements.

49 CFR Part 396

Highway safety, Motor carriers, Motor vehicle safety, Reporting and recordkeeping requirements.

In consideration of the foregoing, FMCSA amends 49 CFR chapter III as set forth below:

PART 325—COMPLIANCE WITH INTERSTATE MOTOR CARRIER NOISE EMISSION STANDARDS

■ 1. The authority citation for part 325 continues to read as follows:

Authority: 42 U.S.C. 4917; 49 U.S.C. 301; and 49 CFR 1.87.

§ 325.3 [Removed and Reserved]

■ 2. Remove and reserve § 325.3.

PART 350—MOTOR CARRIER SAFETY ASSISTANCE PROGRAM AND HIGH PRIORITY PROGRAM

■ 3. The authority citation for part 350 continues to read as follows:

Authority: 49 U.S.C. 13902, 31101–31104, 31108, 31136, 31141, 31161, 31310–31311, 31502; and 49 CFR 1.87.

§ 350.213 [Amended]

■ 4. Amend § 350.213 in paragraph (b) introductory text by removing the reference to ''§ 350.201(q) and (t)'' and adding in its place a reference to ''§ 350.201(q) and (s)''.

PART 365—RULES GOVERNING APPLICATIONS FOR OPERATING AUTHORITY

■ 5. The authority citation for part 365 continues to read as follows:

Authority: 5 U.S.C. 553 and 559; 49 U.S.C. 13101, 13301, 13901–13906, 13908, 14708, 31133, 31138, and 31144; 49 CFR 1.87.

§ 365.203 [Amended]

■ 6. Amend § 365.203 as follows:
■ a. Lift the suspension of the section;
■ b. Remove the phrase ''received at the FMCSA, Office of the Associate Administrator for Research and Information Technology'' and add in its place the phrase ''received at the FMCSA, Office of Registration and Safety Information (MC–RS)''; and
■ c. Suspend § 365.203 indefinitely.

■ 7. Revise § 365.203T to read as follows.

§ 365.203T Time for filing.

A protest shall be filed (received at the FMCSA, Office of Registration and Safety Information (MC–RS), 1200 New Jersey Ave. SE, Washington, DC 20590) within 10 days after notice of the application appears in the FMCSA Register. A copy of the protest shall be sent to applicant's representative at the same time. Failure timely to file a protest waives further participation in the proceeding.

PART 380—SPECIAL TRAINING REQUIREMENTS

■ 8. The authority citation for part 380 continues to read as follows:

Authority: 49 U.S.C. 31133, 31136, 31305, 31307, 31308, 31502; sec. 4007(a) and (b), Pub. L. 102–240, 105 Stat. 1914, 2151; sec. 32304, Pub. L. 112–141, 126 Stat. 405, 791; and 49 CFR 1.87.

§ 380.725 [Amended]

■ 9. Amend § 380.725 in paragraph (a) by removing the phrase ''subpart F of this part'' and adding in its place the phrase ''subpart G of this part''.

PART 382—CONTROLLED SUBSTANCES AND ALCOHOL USE AND TESTING

■ 10. The authority citation for part 382 continues to read as follows:

Authority: 49 U.S.C. 31133, 31136, 31301 *et seq.,* 31502; sec. 32934, Pub. L. 112–141, 126 Stat. 405, 830; and 49 CFR 1.87.

■ 11. Amend § 382.107 by revising the definition of ''actual knowledge'' to read as follows:

§ 382.107 Definitions.

* * * * *

Actual knowledge for the purpose of subpart B of this part, means actual knowledge by an employer that a driver has used alcohol or controlled substances based on the employer's direct observation of the employee, information provided by the driver's previous employer(s), a traffic citation for driving a CMV while under the influence of alcohol or controlled substances or an employee's admission of alcohol or controlled substance use, except as provided in § 382.121. Direct observation as used in this definition means observation of alcohol or controlled substances use and does not include observation of employee behavior or physical characteristics sufficient to warrant reasonable suspicion testing under § 382.307. As used in this section, ''traffic citation'' means a ticket, complaint, or other document charging driving a CMV while under the influence of alcohol or controlled substances.

* * * * *

PART 383—COMMERCIAL DRIVER'S LICENSE STANDARDS; REQUIREMENTS AND PENALTIES

■ 12. The authority citation for part 383 continues to read as follows:

Authority: 49 U.S.C. 521, 31136, 31301 *et seq.,* and 31502; secs. 214 and 215 of Pub. L 106–159, 113 Stat. 1748, 1766, 1767; sec. 1012(b) of Pub. L. 107–56; 115 Stat. 272, 297, sec. 4140 of Pub. L. 109–59, 119 Stat. 1144, 1746; sec. 32934 of Pub. L. 112–141, 126 Stat. 405, 830; secs. 5401 and 7208 of Pub. L. 114–94, 129 Stat. 1312, 1546, 1593; and 49 CFR 1.87.

■ 13. Amend § 383.25 by revising paragraph (c) to read as follows:

§ 383.25 Commercial learner's permit (CLP).

* * * * *

(c) The CLP must be valid for no more than one year from the initial date of issuance without requiring the CLP holder to retake the general and endorsement knowledge tests. CLPs issued for a period of less than one year may be renewed provided the CLP is not valid for more than one year from the date of initial issuance.

* * * * *

PART 385—SAFETY FITNESS PROCEDURES

■ 14. The authority citation for part 385 continues to read as follows:

Authority: 49 U.S.C. 113, 504, 521(b), 5105(e), 5109, 5113, 13901–13905, 13908, 31136, 31144, 31148, 31151, 31502; sec. 350, Pub. L. 107–87, 115 Stat. 833, 864; and 49 CFR 1.87.

■ 15. Amend § 385.13 by revising paragraphs (a) introductory text, (a)(2), and (c) to read as follows.

§ 385.13 Unsatisfactory rated motor carriers; prohibition on transportation; ineligibility for Federal contracts.

(a) Generally, a motor carrier rated ''unsatisfactory'' is prohibited from operating a CMV. Information on motor carriers, including their most current safety rating, is available from the FMCSA Safety and Fitness Electronic Records System website at *https://safer.fmcsa.dot.gov,* or by telephone at (800) 832–5660.

* * * * *

(2) All other motor carriers rated as a result of reviews are prohibited from operating a CMV in motor carrier operations in commerce beginning on the 61st day after the date of the FMCSA notice of proposed ''unsatisfactory'' rating. If FMCSA determines that the motor carrier is making a good-faith effort to improve its safety fitness,

FMCSA may allow the motor carrier to operate for up to 60 additional days.

* * * * *

(c) A Federal agency must not use a motor carrier for other CMV transportation if that carrier holds an ''unsatisfactory'' rating.

* * * * *

■ 16. Amend § 385.19 by revising paragraph (c) to read as follows.

§ 385.19 Safety fitness information.

* * * * *

(c) Requests should be addressed to the Federal Motor Carrier Safety Administration, Office of Registration and Safety Information (MC–RS), 1200 New Jersey Ave. SE, Washington, DC 20590–0001. The information also can be found on the FMCSA Safety and Fitness Electronic Records System website at *https://safer.fmcsa.dot.gov.*

* * * * *

■ 17. Amend § 385.403 by revising the introductory text to read as follows.

§ 385.403 Who must hold a safety permit?

A motor carrier may not transport in interstate or intrastate commerce any of the following hazardous materials, in the quantity indicated for each, unless the motor carrier holds a safety permit:

* * * * *

■ 18. Amend § 385.405 as follows:

■ a. Lift the suspension of the section;

■ b. Revise paragraph (b); and

■ c. Suspend § 385.405 indefinitely.

The revision reads as follows.

§ 385.405 How does a motor carrier apply for a safety permit?

* * * * *

(b) *How to apply.* Form MCSA–1, the URS online application, is accessible, including complete instructions, at *http://www.fmcsa.dot.gov/urs.*

* * * * *

■ 19. Amend § 385.405T by revising paragraph (b) to read as follows.

§ 385.405T How does a motor carrier apply for a safety permit?

* * * * *

(b) *Where to get forms and instructions.* The forms listed in paragraph (a) of this section, and instructions for completing the forms, may be obtained on the internet at *http://www.fmcsa.dot.gov,* or by contacting FMCSA at Federal Motor Carrier Safety Administration, Office of Registration and Safety Information (MC–RS), 1200 New Jersey Ave. SE, Washington, DC 20590–0001 or by telephone at 1–800–832–5660.

* * * * *

■ 20. Revise § 385.417 to read as follows.

§ 385.417 Is a motor carrier's safety permit number available to others?

Upon request, a motor carrier must provide the number of its safety permit to a person who offers a hazardous material listed in § 385.403 for transportation in commerce. A motor carrier's permit number also will be available to the public on the FMCSA Safety and Fitness Electronic Records System website at *https://safer.fmcsa.dot.gov.*

■ 21. Amend appendix B to part 385, section VII, by revising the entries for ''§ 382.213(b)'' and ''§ 391.45(b)(1)'' to read as follows:

Appendix B to Part 385—Explanation of Safety Rating Process

* * * * *

VII. List of Acute and Critical Regulations

* * * * *

§ 382.213(c) Using a driver known to have used a controlled substance (acute).

* * * * *

§ 391.45(b) Using a driver not medically examined and certified during the preceding 24 months (critical).

* * * * *

PART 387—MINIMUM LEVELS OF FINANCIAL RESPONSIBILITY FOR MOTOR CARRIERS

■ 22. The authority citation for part 387 continues to read as follows:

Authority: 49 U.S.C. 13101, 13301, 13906, 13908, 14701, 31138, and 31139; sec. 204(a), Pub. L. 104–88, 109 Stat. 803, 941; and 49 CFR 1.87.

■ 23. Amend § 387.303 as follows:

■ a. Lift the suspension of the section;

■ b. Revise paragraph (b)(2)(iii); and

■ c. Suspend § 387.303 indefinitely.

The revision reads as follows.

§ 387.303 Security for the protection of the public: Minimum limits.

* * * * *

(b) * * *

(2) * * *

Kind of equipment	Commodity transported	Minimum limits
* * *	* * *	*
(iii) Freight vehicles of 10,001 pounds (4,536 kilograms) or more GVWR.	Oil listed in § 172.101 of this title; hazardous waste, hazardous materials and hazardous substances defined in § 171.8 of this title and listed in § 172.101 of this title, but not mentioned in paragraph (b)(2)(ii) or paragraph (b)(2)(iv) of this section.	1,000,000
* * *	* * *	*

* * * * *

■ 24. Amend § 387.303T by revising paragraph (b)(2)(iii) to read as follows.

§ 387.303T Security for the protection of the public: Minimum limits.

* * * * *

(b) * * *

(2) * * *

Kind of equipment	Commodity transported	Minimum limits
* * *	* * *	*
(iii) Freight vehicles of 10,001 pounds (4,536 kilograms) or more GVWR.	Oil listed in § 172.101 of this title; hazardous waste, hazardous materials and hazardous substances defined in § 171.8 of this title and listed in § 172.101 of this title, but not mentioned in paragraph (b)(2)(ii) or paragraph (b)(2)(iv) of this section.	1,000,000

Kind of equipment	Commodity transported	Minimum limits
* * *	* * *	*

* * * * *

■ 25. Amend § 387.307 by revising paragraph (c)(4) to read as follows.

§ 387.307 Property broker surety bond or trust fund.

* * * * *

(c) * * *

(4) An insured depository institution (as defined in section 3(c)(2) of the Federal Deposit Insurance Act (12 U.S.C. 1813(c)(2));

* * * * *

§ 387.313 [Amended]

■ 26. Amend § 387.313 as follows:
■ a. Lift the suspension of the section;
■ b. Remove paragraph (f); and
■ c. Suspend § 387.313 indefinitely.

§ 387.313T [Amended]

■ 27. Amend § 387.313T by removing paragraph (f).

■ 28. Amend § 387.413 as follows:
■ a. Lift the suspension of the section;
■ b. Revise the section heading;
■ c. Remove paragraph (f); and
■ d. Suspend § 387.413 indefinitely.

The revision reads as follows:

§ 387.413 Forms and procedures.

* * * * *

§ 387.413T [Amended]

■ 29. Amend § 387.413T by removing paragraph (f).

PART 389—RULEMAKING PROCEDURES—FEDERAL MOTOR CARRIER SAFETY REGULATIONS

■ 30. The authority citation for part 389 continues to read as follows:

Authority: 49 U.S.C. 113, 501 *et seq.,* subchapters I and III of chapter 311, chapter 313, and 31502; 42 U.S.C. 4917; and 49 CFR 1.87.

■ 31. Amend § 389.9 by revising the section heading and paragraph (a) to read as follows:

§ 389.9 Treatment of confidential business information submitted under confidential class determinations.

(a) *Purpose.* This section establishes the standards and procedures by which the Agency will solicit and receive certain confidential commercial or financial information, as that term is used in the Freedom of Information Act (5 U.S.C. 552(b)(4)), categorically referred to below as ''confidential business information,'' and the manner in which the Agency will protect such information from public disclosure in accordance with 5 U.S.C. 552(b)(4), when it is submitted in accordance with paragraph (f) of this section.

* * * * *

PART 391—QUALIFICATIONS OF DRIVERS AND LONGER COMBINATION VEHICLE (LCV) DRIVER INSTRUCTORS

■ 32. The authority citation for part 391 continues to read as follows:

Authority: 49 U.S.C. 504, 508, 31133, 31136, 31149, 31502; sec. 4007(b), Pub. L. 102–240, 105 Stat. 1914, 2152; sec. 114, Pub. L. 103–311, 108 Stat. 1673, 1677; sec. 215, Pub. L. 106–159, 113 Stat. 1748, 1767; sec. 32934, Pub. L. 112–141, 126 Stat. 405, 830; secs. 5403 and 5524, Pub. L. 114–94, 129 Stat. 1312, 1548, 1560; sec. 2, Pub. L. 115–105, 131 Stat. 2263; and 49 CFR 1.87.

■ 33. Amend § 391.41 by revising paragraph (a)(1)(i) to read as follows:

§ 391.41 Physical qualifications for drivers.

(a)(1)(i) A person subject to this part must not operate a commercial motor vehicle unless he or she is medically certified as physically qualified to do so, and, except as provided in paragraph (a)(2) of this section, when on-duty has on his or her person the original, or a copy, of a current medical examiner's certificate that he or she is physically qualified to drive a commercial motor vehicle. NOTE: Effective December 29, 1991, and as amended on January 19, 2017, the FMCSA Administrator determined that the Licencia Federal de Conductor issued by the United Mexican States is recognized as proof of medical fitness to drive a CMV. The United States and Canada entered into a Reciprocity Agreement, effective March 30, 1999, recognizing that a Canadian commercial driver's license is proof of medical fitness to drive a CMV. Therefore, Canadian and Mexican CMV drivers are not required to have in their possession a medical examiner's certificate if the driver has been issued, and possesses, a valid commercial driver license issued by the United Mexican States, or a Canadian Province or Territory, and whose license and medical status, including any waiver or exemption, can be electronically verified. Drivers from any of the countries who have received a medical authorization that deviates from the mutually accepted compatible medical standards of the resident country are not qualified to drive a CMV in the other countries. For example, Canadian drivers who do not meet the medical fitness provisions of the Canadian National Safety Code for Motor Carriers but are issued a waiver by one of the Canadian Provinces or Territories, are not qualified to drive a CMV in the United States. In addition, U.S. drivers who received a medical variance from FMCSA are not qualified to drive a CMV in Canada.

* * * * *

§ 391.46 [Amended]

■ 34. Amend § 391.46 in paragraph (c)(2)(iv) by removing the phrase ''paragraph (c)(iv) of this section'' and adding in its place the phrase ''paragraph (c)(2)(iii) of this section''.

■ 35. Amend § 391.51 by revising paragraph (b)(7)(ii) to read as follows:

§ 391.51 General requirements for driver qualification files.

* * * * *

(b) * * *

(7) * * *

(ii) *Exception.* For CDL holders, if the CDLIS motor vehicle record contains medical certification status information, the motor carrier employer must meet this requirement by obtaining the CDLIS motor vehicle record defined at § 384.105 of this chapter. That record must be obtained from the current licensing State and placed in the driver qualification file. After January 30, 2015, a non-excepted, interstate CDL holder without medical certification status information on the CDLIS motor vehicle record is designated ''not-certified'' to operate a CMV in interstate commerce. After January 30, 2015, and through June 21, 2021, a motor carrier may use a copy of the driver's current medical examiner's certificate that was submitted to the State for up to 15 days from the date it was issued as proof of medical certification.

* * * * *

■ 36. Amend § 391.53 by revising paragraphs (a) introductory text and (b)(1) to read as follows:

§ 391.53 Driver investigation history file.

(a) Each motor carrier must maintain records relating to the investigation into the safety performance history of a new or prospective driver pursuant to

§ 391.23(d) and (e). This file must be maintained in a secure location with controlled access.

* * * * *

(b) * * *

(1) A copy of the driver's written authorization for the motor carrier to seek information about a driver's alcohol and controlled substances history as required under § 391.23(f)(1).

* * * * *

PART 392—DRIVING OF COMMERCIAL MOTOR VEHICLES

■ 37. The authority citation for part 392 is revised to read as follows:

Authority: 49 U.S.C. 504, 521, 13902, 13908, 31136, 31151, 31502; sec. 112 of Pub. L. 103–311, 108 Stat. 1673, 1676, as amended by sec. 32509 of Pub. L. 112–141, 126 Stat. 405, 805; and 49 CFR 1.87.

§ 392.10 [Amended]

■ 38. Amend § 392.10 by removing the commas at the end of paragraphs (b)(2) and (4) and adding in their place periods.

PART 395—HOURS OF SERVICE OF DRIVERS

■ 39. The authority citation for part 395 continues to read as follows:

Authority: 49 U.S.C. 504, 31133, 31136, 31137, 31502; sec. 113, Pub. L. 103–311, 108 Stat. 1673, 1676; sec. 229, Pub. L. 106–159 (as added and transferred by sec. 4115 and amended by secs. 4130–4132, Pub. L. 109–59, 119 Stat. 1144, 1726, 1743, 1744); sec. 4133, Pub. L. 109–59, 119 Stat. 1144, 1744; sec. 108, Pub. L. 110–432, 122 Stat. 4860–4866; sec. 32934, Pub. L. 112–141, 126 Stat. 405, 830; sec. 5206(b), Pub. L. 114–94, 129 Stat. 1312, 1537; and 49 CFR 1.87.

■ 40. Amend § 395.1 by revising paragraph (a)(1) to read as follows:

§ 395.1 Scope of rules in this part.

(a) *General.* (1) The rules in this part apply to all motor carriers and drivers, except as provided in paragraphs (b) through (x) of this section.

* * * * *

■ 41. Amend § 395.2 by revising the definition of ''livestock'' to read as follows:

§ 395.2 Definitions.

* * * * *

Livestock means cattle, elk, reindeer, bison, horses, deer, sheep, goats, swine, poultry (including egg-producing poultry), llamas, alpacas, live fish, crawfish, and other animals that are part of a foundation herd (including dairy producing cattle) or offspring; or are purchased as part of a normal operation and not to obtain additional benefits under the Emergency Livestock Feed Assistance Act of 1988, as amended.

* * * * *

PART 396—INSPECTION, REPAIR, AND MAINTENANCE

■ 42. The authority citation for part 396 continues to read as follows:

Authority: 49 U.S.C. 504, 31133, 31136, 31151, 31502; sec. 32934, Pub. L. 112–141, 126 Stat. 405, 830; sec. 5524, Pub. L. 114–94, 129 Stat. 1312, 1560; and 49 CFR 1.87.

■ 43. Amend § 396.15 by revising paragraph (a) to read as follows:

§ 396.15 Driveaway-towaway operations and inspections.

(a) *General.* Every motor carrier, with respect to motor vehicles engaged in driveaway-towaway operations, shall comply with the requirements of this part. Exception: Maintenance records required by § 396.3, the vehicle inspection report required by § 396.11, and the periodic inspection required by § 396.17 of this part shall not be required for any vehicle which is part of the shipment being delivered.

* * * * *

Issued under authority delegated in 49 CFR 1.87 on:

Dated: September 5, 2019.

Raymond P. Martinez,

Administrator.

[FR Doc. 2019–20591 Filed 9–27–19; 8:45 am]

BILLING CODE 4910–EX–P

DEPARTMENT OF COMMERCE

National Oceanic and Atmospheric Administration

50 CFR Part 622

[Docket No. 190924–0037]

RIN 0648–BJ19

Temporary Rule To Increase the Commercial Trip Limit for Atlantic King Mackerel

AGENCY: National Marine Fisheries Service (NMFS), National Oceanic and Atmospheric Administration (NOAA), Commerce.

ACTION: Final temporary rule; emergency action.

SUMMARY: NMFS issues this emergency action, a final temporary rule to revise the Atlantic migratory group king mackerel (Atlantic king mackerel) commercial trip limit within the Atlantic southern zone from October 1, 2019, through February 29, 2020, as requested by the South Atlantic Fishery Management Council (Council). The purpose of this final temporary rule is to increase the commercial trip limit to allow for a significant economic opportunity that otherwise would be forgone and relieve an economic burden within the Atlantic king mackerel commercial sector without increasing the risk to the stock.

DATES: This temporary rule is effective October 1, 2019, through February 29, 2020.

ADDRESSES: Electronic copies of the documents in support of this emergency rule, which includes the Council's letter to NMFS that contains the Council's rationale for the emergency action request may be obtained from the Southeast Regional Office website at *https://www.fisheries.noaa.gov/action/emergency-rule-king-mackerel-trip-limits.*

FOR FURTHER INFORMATION CONTACT: Karla Gore, NMFS Southeast Regional Office, telephone: 727–551–5753, or email: *karla.gore@noaa.gov.*

SUPPLEMENTARY INFORMATION: The coastal migratory pelagics fishery is managed under the Fishery Management Plan for Coastal Migratory Pelagic Resources in the Gulf of Mexico and Atlantic Region (FMP) and includes king mackerel and Spanish mackerel and, in the Gulf of Mexico, cobia. The FMP was prepared by the Gulf of Mexico Fishery Management Council and the Council and is implemented by NMFS through regulations at 50 CFR part 622 under authority of the Magnuson-Stevens Fishery Conservation and Management Act (Magnuson-Stevens Act). The Magnuson-Stevens Act provides the legal authority for the promulgation of emergency regulations under section 305(c)(16 U.S.C. 1855(c)).

Background

The fishery for Atlantic king mackerel is divided into a northern zone and a southern zone in the exclusive economic zone (EEZ), with the quota for this migratory group divided between the two zones. The northern zone extends from the North Carolina/South Carolina boundary through New York, and the southern zone extends from the North Carolina/South Carolina boundary to the Miami-Dade/Monroe County, Florida, boundary. The fishing year for the commercial sector for Atlantic king mackerel is March 1 through the end of February. The quota for the southern zone is allocated between two commercial seasons. Season 1 allocates 60 percent of the quota from March 1 through September 30, and Season 2 allocates 40 percent of

the quota from October 1 through the end of February. Any unused quota from Season 1 transfers during the current fishing year to Season 2, with no provision allowing the carryover of any unused quota at the end of Season 2. When the quota for a season is reached or expected to be reached, commercial harvest of king mackerel in the Atlantic southern zone is prohibited for the remainder of that season.

The trip limit system for the southern zone includes a 3,500 lb (1,588 kg) year-round trip limit north of the Flagler/Volusia County, FL, boundary. For the area between the Flagler/Volusia County, FL, boundary, and the Miami-Dade/Monroe County, FL, boundary, the trip limit is 50 fish during Season 2 from October 1 through January 31. The trip limit remains at 50 fish during the month of February, unless NMFS determines that less than 70 percent of the commercial quota for the southern zone's second season has been landed. In that case, NMFS announces the trip limit increase to 75 fish in the **Federal Register**.

The Southeast Data, Assessment, and Review (SEDAR) 38 stock assessment (SEDAR 38; September 2014) indicated that neither the Atlantic nor Gulf king mackerel migratory groups were overfished or undergoing overfishing. With the implementation of Amendment 26 to the FMP (68 FR 17387; April 11, 2017), the southern zone quota increased from the initial 2,587,960 lb (1,173,879 kg) to 5,002,400 lb (2,269,050 kg) in 2016–2017, and was set at 4,450,640 lb (2,059,600 kg) in 2017–2018, 4,001,920 lb (1,185,240 kg) in 2018–2019, and 3,617,120 lb (1,640,698 kg) in 2019–2020.

In March 2019, the Council voted to begin developing Framework Amendment 8 to the FMP to address stakeholder concerns about the 50-fish Season 2 trip limit. Stakeholders and members of the Council's Mackerel Cobia Advisory Panel (AP) indicated that the current 50-fish Season 2 trip limit is a factor in preventing commercial king mackerel fishermen from catching the Season 2 quota or achieving optimum yield (OY). While commercial landings have increased slightly in recent years, during Season 2 the vessels that are capable of landing more than the trip limit are unnecessarily limited because of the lower trip limit. The AP discussed these problems at its April 2019 meeting and reviewed new information showing how much of the quota is not being harvested since the implementation of the 50-fish Season 2 trip limit in May 2017. After discussion, the AP voted to recommend that the Council consider emergency action for 2019 to raise the trip limit south of the Flagler/Volusia County, FL, boundary from 50 to 75 fish beginning in October, the start of Season 2. The Council discussed the AP's recommendation at their June 2019 meeting and heard public testimony supporting the emergency action. They reviewed new information showing how much of the Season 2 quota has not been harvested the last several years by the commercial sector. For example, Season 2 preliminary landings are 710,729 lb (322,381 kg) for the 2017–2018 fishing year and 929,000 lb (421,387 kg) for the 2018–2019 fishing year, and the unadjusted quota was 1,600,768 lb (726,096 kg). The Council was also presented with new preliminary information that showed the estimated average value of the unharvested southern zone quota was over 5 million dollars for the 2017–2018 fishing year and over 3 million dollars for the 2018–2019 fishing year. After reviewing all of the information, the Council voted 12–1 in favor of an emergency rule under the Magnuson-Stevens Act to increase the trip limit for Season 2 to 75 fish. On June 21, 2019, the Council sent NMFS a letter requesting an emergency rule to increase the 2019–2020 fishing year's Season 2 commercial trip limit for king mackerel.

Justification for Emergency Action

NMFS' Policy Guidelines for the Use of Emergency Rules (62 FR 44421; August 21, 1997) list three criteria for determining whether an emergency exists, and this temporary rule is promulgated under these guidelines and meets each of these three criteria. Specifically, NMFS' policy guidelines require that an emergency: (1) Results from recent, unforeseen events or recently discovered circumstances; (2) presents serious conservation or management problems in the fishery; and (3) can be addressed through emergency regulations for which the immediate benefits outweigh the value of advance notice, public comment, and deliberative consideration of the impacts on participants to the same extent as would be expected under the normal rulemaking process.

At their June 2019 meeting, the Council reviewed recent preliminary landings estimates showing that a large percentage of the southern zone quota was not being harvested. The trip limit system and split season structure for the southern zone were implemented on May 11, 2017, through Amendment 26 to the FMP. One purpose of Amendment 26 was to increase the social and economic benefits of the fishery. The primary function of the split season structure and trip limit system was to ensure the longest commercial fishing season possible for Atlantic king mackerel and to provide continued access throughout the fishing year to commercial king mackerel fishermen. However, during public comment at the June 2019 Council meeting, commercial king mackerel fishermen told the Council that when they fish south of the Flagler/Volusia County, FL, boundary, because of the low trip limit they are unable to carry their usual amount of crew, they operate less efficiently, and they are unable to fully utilize the available resource. The Council discussed the fishermen's concerns and these unforeseen negative consequences of the Season 2 trip limit, including the estimated value of the unharvested quota. The Council determined that an emergency rule to increase the trip limit was necessary to prevent further unnecessary economic losses and would substantially increase the likelihood of achieving OY in the fishery for the 2019–2020 fishing year. Framework Amendment 8 is in the early stages of development by the Council and cannot be implemented in time for the October 1, 2019, beginning of Season 2 for the 2019–2020 fishing year. Waiting for implementation of Framework Amendment 8 would preclude a significant economic opportunity that could otherwise be realized in the 2019–2020 fishing year under an emergency rule.

An emergency rule could provide for a temporary increase in the trip limit that would allow fishermen to increase their trip efficiency and avoid further unnecessary economic harm and related social problems, while the Council works on providing a permanent solution through the development of Framework Amendment 8. The emergency rule would not increase the overall Season 2 commercial quota or ACL for king mackerel, but it would allow fishermen more opportunity to harvest the quota and to achieve OY. The Council and NMFS expect that, since commercial king mackerel landings have not reached the southern zone quota in recent years, increasing the trip limit from 50 to 75 fish in the southern zone south of Flagler/Volusia County, FL, for Season 2 would be unlikely to result in an early commercial closure, given the expected level of commercial effort during Season 2, including the anticipated increased effort resulting from this emergency rule. In addition, the current ACL and accountability measures would continue

to constrain harvest and prevent overfishing.

NMFS has determined that modifying the 2019–2020 Season 2 commercial trip limit as described above meets the three criteria required for an emergency rule. The Council requested this emergency rule, a final temporary rule, in response to recently discovered and unforeseen negative consequences of the commercial trip limit system for Atlantic king mackerel put in place through Amendment 26 that present a serious management problem in this fishery. In recent years, the king mackerel commercial quota for the Atlantic southern zone has not been harvested. In the 2018–2019 fishing year, only approximately 59 percent of the quota was harvested. The value of unharvested commercial quota for the Atlantic southern zone over the last four fishing seasons averages $3,880,961 per season. The unharvested quota of king mackerel in the Atlantic southern zone represents a significant value of catch unavailable to fishing communities from trip limits that are unnecessarily restricting harvest well below the allowable quota. The current trip limit of 50 fish in Season 2 for the southern zone south of Flagler/Volusia County, FL, results in a loss of significant economic opportunity, because vessels that are capable of landing more than 50 fish are unnecessarily limited by the lower trip limit.

NMFS expects 102 vessels that make 593 (28.7 percent) of the affected trips to benefit from the increased trip limit, with an average increase of dockside revenue of $203.81 (2017 dollars) per trip, and an increase in the total dockside revenue for those trips, combined, of approximately $120,859. Additionally, this rule changes the February 2020 commercial trip limit, currently at 75 fish if less than 70 percent of the quota is reached, and 50 fish after 70 percent of the quota is reached, to 75 fish in February regardless of the percentage of the quota reached. Not revising the trip limit system for the Atlantic southern zone during Season 2 of the 2019–2020 fishing year would result in unnecessary limits on landings and associated dockside revenues because of unharvested quota, and most likely would preclude achievement of OY.

Unnecessarily low trip limits are affecting these vessels' ability to operate efficiently, and reduced dockside revenues per trip have negative indirect economic effects, such as significantly reduced incomes for vessel owners and crew. The current trip limit system is causing undue hardship on fishing communities reliant upon the king mackerel resource along the east coast of Florida, specifically, south of Flagler/Volusia County, FL, to the Miami-Dade/Monroe County, FL, boundary. NMFS expects an increase in the Season 2 trip limit for the 2019–2020 fishing year to provide immediate direct economic and social benefits to commercial king mackerel fishermen operating in this area by allowing for increased landings and thereby increasing trip revenues. Additionally, larger trip limits that result in increased revenues to vessels have positive economic impacts, such as increased incomes to owners and crew, more job opportunities for vessel crew, and more king mackerel available to processors, dealers and consumers.

The benefits to the king mackerel fishermen of using an emergency action to increase the trip limit for Season 2 in the 2019–2020 fishing year outweigh the value of taking the time necessary to complete normal, notice-and-comment rulemaking. Season 2 begins on October 1, 2019, and Framework Amendment 8 to the FMP, which the Council is developing to make more permanent modifications to the Season 2 trip limit measures, will not be completed and implemented during 2019. As a result, neither the upcoming Framework Amendment 8 and its required notice-and-comment rulemaking process would allow for an increase in the trip limit in time to apply to Season 2 of the 2019–2020 fishing year. Thus, using the notice-and-comment rulemaking process instead of an emergency action would unnecessarily prevent the economic gains to fishing industry participants and communities for the upcoming season. During the June 2019 Council meeting held in Stuart, FL, nearly 40 individuals commented during the public comment session, and most of them spoke in support of increasing the trip limit. In addition, this emergency action is temporary. In developing any future, more permanent trip limit measures through Framework Amendment 8, the Council process will provide ample opportunity for notice and comment and full public participation.

Management Measure Contained in This Temporary Rule

This final temporary rule revises the Atlantic king mackerel commercial trip limit in the southern zone south of Flagler/Volusia County, FL, to the Miami-Dade/Monroe County, FL, boundary during Season 2 for the commercial sector. The current 50-fish commercial trip limit will be increased to 75 fish from October 1, 2019, through February 29, 2020, between the Flagler/Volusia County, FL, boundary, and the Miami-Dade/Monroe County, FL, boundary. For the month of February, this temporary rule will remove the trip limit reduction measures of 75 to 50 fish when 70 percent of the quota is reached to maintaining 75 fish for the entire month of February, or until the total quota is reached. Implementing this measure through emergency action will allow for increased economic and harvest opportunities that would otherwise not be realized by fishing industry participants and communities in the upcoming season, while the Council continues development of long-term measures to address commercial trip limits in Framework Amendment 8. The Council is currently planning to finalize Framework Amendment 8 in December 2019, and will subsequently submit it for Secretarial review and rulemaking.

NMFS issues this final temporary rule without opportunity for prior notice and public comment. While an emergency action through the Magnuson-Stevens Act may be implemented for an initial period of 180 days and then subsequently extended for up to another 186 days, NMFS does not expect that to occur for this action. Given the limited scope of this action to only be effective from October 2019 through February 2020, no extension of these emergency measures is necessary or expected.

Classification

This action is issued pursuant to section 305(c) of the Magnuson-Stevens Act, 16 U.S.C. 1855(c). The Assistant Administrator for Fisheries, NOAA, has determined that this emergency action is consistent with the Magnuson-Stevens Act, the FMP, and other applicable law. This action is being taken pursuant to the emergency provisions of the Magnuson-Stevens Act and is exempt from Office of Management and Budget (OMB) review.

The Assistant Administrator for Fisheries, NOAA, finds good cause, pursuant to 5 U.S.C. 553(b)(B), to waive prior notice and the opportunity for public comment as impracticable and contrary to the public interest. Providing prior notice and opportunity for public comment would preclude implementing the higher trip limit in time for the start of Season 2 on October 1, 2019. Notice-and-comment rulemaking is contrary to the public interest in these circumstances. This final temporary rule allows for a significant economic opportunity that otherwise would be forgone, and relieves an economic burden within the Atlantic king mackerel commercial sector without increasing the risk to the stock. This emergency action increases

the commercial trip limit for Atlantic king mackerel from 50 fish to 75 fish from October 2019 through January 2020, in Federal waters from the Flagler/Volusia County, FL, boundary to the Miami-Dade/Monroe County, FL, boundary. One hundred and two vessels that make 28.7 percent of the trips are expected to benefit, with an average increase of dockside revenue of $203.81 per trip (2017 dollars) for 593 trips, and an increase in total dockside revenue for those trips combined approximately by $120,859. This rule also changes the February 2020 commercial trip limit from the Flagler/Volusia County, FL, boundary to the Miami-Dade/Monroe County, FL, boundary, which is presently at 75 fish if less than 70 percent of the Season 2 quota is reached and 50 fish after 70 percent of the quota is reached, to 75 fish regardless of the percentage of the quota reached. Because 70 percent of the quota has not been reached since implementation of the current trip limit, the limit in February has essentially been at 75 fish. Consequently, no changes in February landings are expected. The current ACL and accountability measures will continue to constrain commercial harvest and prevent overfishing, and no adverse effects to the king mackerel resource are expected to occur as a result of the increased trip limit.

For these same reasons, the AA also finds good cause under 5 U.S.C. 553(d)(3) to waive the 30-day delay in the date of effectiveness of the action. Also, because this measure increases the current Season 2 trip limit, it relieves a restriction, and therefore it also falls within the 5 U.S.C. 553(d)(1) exception to the 30-day delay in the date of effectiveness requirement. Additionally, if the increased trip limit is not in effect by the start of Season 2, October, 1, 2019, then the benefits of this action would be reduced and the full economic opportunities that are anticipated would not be realized. A reduction of expected benefits would also be contrary to the intent of the Council.

This emergency rule is exempt from the procedures of the Regulatory Flexibility Act because the rule is not subject to the requirement to provide prior notice and opportunity for public comment pursuant to 5 U.S.C. 553 or any other law. Accordingly, no regulatory flexibility analysis is required and none has been prepared.

List of Subjects in 50 CFR Part 622

Atlantic, Commercial, Fisheries, Fishing, King mackerel, Trip limits.

Dated: September 24, 2019.

Samuel D. Rauch, III,

Deputy Assistant Administrator for Regulatory Programs, National Marine Fisheries Service.

For the reasons set out in the preamble, 50 CFR part 622 is amended as follows:

PART 622—FISHERIES OF THE CARIBBEAN, GULF OF MEXICO, AND SOUTH ATLANTIC

■ 1. The authority citation for part 622 continues to read as follows:

Authority: 16 U.S.C. 1801 *et seq.*

■ 2. In § 622.385, suspend paragraphs (a)(1)(ii)(C) and (D), and (a)(1)(iii)(C) and (D), and add paragraphs (a)(1)(ii)(E), and (a)(1)(iii)(E) to read as follows:

§ 622.385 Commercial trip limits.

* * * * *

(a) * * *

(1) * * *

(ii) * * *

(E) From October 1 through the end of February—75 fish.

(iii) * * *

(E) From October 1 through the end of February—75 fish.

* * * * *

[FR Doc. 2019–21127 Filed 9–27–19; 8:45 am]

BILLING CODE 3510–22–P

DEPARTMENT OF COMMERCE

National Oceanic and Atmospheric Administration

50 CFR Part 648

[Docket No. 170828822–70999–02]

RIN 0648–XX014

Fisheries of the Northeastern United States; Scup Fishery; Adjustment to the 2019 Winter II Quota

AGENCY: National Marine Fisheries Service (NMFS), National Oceanic and Atmospheric Administration (NOAA), Commerce.

ACTION: Temporary rule; inseason adjustment.

SUMMARY: NMFS adjusts the 2019 Winter II commercial scup quota and per-trip Federal landing limit. This action is intended to comply with Framework Adjustment 3 to the Summer Flounder, Scup, and Black Sea Bass Fishery Management Plan that established the rollover of unused commercial scup quota from the Winter I to Winter II period. This document is intended to inform the public of this quota and trip limit change.

DATES: Effective October 1, 2019, through December 31, 2019.

FOR FURTHER INFORMATION CONTACT: Laura Hansen, Fishery Management Specialist, (978) 281–9225; or *Laura.Hansen@noaa.gov.*

SUPPLEMENTARY INFORMATION: NMFS published a final rule for Framework Adjustment 3 to the Summer Flounder, Scup, and Black Sea Bass Fishery Management Plan in the **Federal Register** on November 3, 2003 (68 FR 62250), implementing a process to roll over unused Winter I commercial scup quota (January 1 through April 30) to be added to the Winter II period quota (October 1 through December 31) (50 CFR 648.122(d)). The framework also allows adjustment of the commercial possession limit for the Winter II period dependent on the amount of quota rolled over from the Winter I period. The Winter II period start date was changed from November 1 to October 1 as a part of Framework Adjustment 12 (83 FR 17314; April 19, 2018).

For 2019, the initial Winter II quota is 3,822,816 lb (1,734 mt). The best available landings information indicates that 5,267,671 lb (2,389 mt) remain of the 10,820,000 lb (4,908 mt) Winter I quota. Consistent with Framework 3, the full amount of unused 2019 Winter I quota is being transferred to Winter II, resulting in a revised 2019 Winter II quota of 9,090,487 lb (4,123 mt). Because the amount transferred is between 5.0 and 5.5 million lb (2,268 mt and 2,495 mt), the Federal per trip possession limit will increase from 12,000 lb (5.4 mt) to 27,000 lb (12.2 mt), as outlined in the final rule that established the possession limit and quota rollover procedures for this year, published on December 22, 2017 (82 FR 60682).

Classification

This action is required by 50 CFR part 648 and is exempt from review under Executive Order 12866.

The Assistant Administrator for Fisheries, NOAA, finds good cause under 5 U.S.C. 553(b)(B) to waive prior notice and the opportunity for public comment on this in-season adjustment because it would be contrary to the public interest. This action transfers unused quota from Winter I Period to the remaining Winter II Period to make it accessible to the commercial scup fishery. If implementation of this in-season action is delayed to solicit prior public comment, the objective of the fishery management plan to achieve the optimum yield from the fishery could be compromised. Deteriorating weather conditions during the latter part of the

fishing year may reduce fishing effort, and could also prevent the annual quota from being fully harvested. This would conflict with the agency's legal obligation under the Magnuson-Stevens Fishery Conservation and Management Act to achieve the optimum yield from a fishery on a continuing basis, resulting in a negative economic impact on vessels permitted to fish in this fishery. Moreover, the rollover process being applied here was the subject of notice and comment rulemaking, and the range of potential trip limit changes were outlined in the final 2018 scup specifications that were published December 22, 2017; which were developed through public notice and comment. Based on these considerations, NMFS further finds, pursuant to 5 U.S.C. 553(d)(3), good cause to waive the 30-day delayed effectiveness period for the reasons stated above.

Authority: 16 U.S.C. 1801 *et seq.*

Dated: September 19, 2019.

Jennifer M. Wallace,

Acting Director, Office of Sustainable Fisheries, National Marine Fisheries Service.

[FR Doc. 2019–20674 Filed 9–27–19; 8:45 am]

BILLING CODE 3510–22–P

Proposed Rules

Federal Register
Vol. 84, No. 189
Monday, September 30, 2019

This section of the FEDERAL REGISTER contains notices to the public of the proposed issuance of rules and regulations. The purpose of these notices is to give interested persons an opportunity to participate in the rule making prior to the adoption of the final rules.

DEPARTMENT OF ENERGY

10 CFR Parts 429 and 430

[EERE–2013–BT–TP–0050]

RIN 1904–AD88

Energy Conservation Program: Test Procedure for Ceiling Fans

AGENCY: Office of Energy Efficiency and Renewable Energy, Department of Energy.

ACTION: Notice of proposed rulemaking and request for comment.

SUMMARY: The U.S. Department of Energy (DOE) proposes to amend its test procedures for ceiling fans established under the Energy Policy and Conservation Act. On July 25, 2016, DOE published a final rule amending the test procedure for ceiling fans to support the ceiling fans energy conservation standards rulemaking. In this notice of proposed rulemaking (NOPR), DOE proposes to: Interpret the term ''suspended from a ceiling'' in the EPCA definition of ceiling fan to mean offered for mounting only on a ceiling; specify that very small-diameter (VSD) ceiling fans that do not also meet the definition of low-speed small-diameter (LSSD) ceiling fan are not required to be tested pursuant to the DOE test method; for LSSD and VSD ceiling fans, increase the tolerance for the stability criteria for the average air velocity measurements in low speed to reduce test burden; specify that large-diameter ceiling with blade spans greater than 24 feet do not need to be tested pursuant to the DOE test method; codify current guidance on calculating several values reported on the U.S. Federal Trade Commission's (FTC) EnergyGuide label for LSSD and VSD ceiling fans using results from the ceiling fan test procedures; and amend certification requirements and product-specific enforcement provisions to reflect the current test procedures and recently amended energy conservation standards for ceiling fans.

DATES:

Comments: Written comments and information are requested and will be accepted on or before November 29, 2019. See section V, ''Public Participation,'' for details.

Meeting: DOE will hold a public meeting on Wednesday, October 16, 2019 from 10:00 a.m. to 5:00 p.m.

ADDRESSES:

Meeting: The public meeting will be held at the U.S. Department of Energy, Forrestal Building, Room 8E–089, 1000 Independence Avenue SW, Washington, DC 20585. The meeting will also be broadcast as a webinar. See section V, ''Public Participation,'' for webinar registration information, participant instructions, and information about the capabilities available to webinar participants.

Comments: Interested persons are encouraged to submit comments using the Federal eRulemaking Portal at *http://www.regulations.gov.* Follow the instructions for submitting comments. Alternatively, interested persons may submit comments, identified by docket number EERE–2013–BT–TP–0050 or regulatory information number (RIN) 1904–AD88, by any of the following methods:

(1) *Federal eRulemaking Portal: http://www.regulations.gov.* Follow the instructions for submitting comments.

(2) *Email: CF2013TP0050@ee.doe.gov.* Include the docket number EERE–2013–BT–TP–0050 or regulatory information number (RIN) 1904–AD88 in the subject line of the message.

(3) *Postal Mail:* Appliance and Equipment Standards Program, U.S. Department of Energy, Building Technologies Office, Mailstop EE–5B, 1000 Independence Avenue SW, Washington, DC 20585–0121. Telephone: (202) 287–1445. If possible, please submit all items on a compact disc (CD), in which case it is not necessary to include printed copies.

(4) *Hand Delivery/Courier:* Appliance and Equipment Standards Program, U.S. Department of Energy, Building Technologies Office, 950 L'Enfant Plaza SW, Suite 600, Washington, DC 20024. Telephone: (202) 287–1445. If possible, please submit all items on a CD, in which case it is not necessary to include printed copies.

No telefacsimilies (faxes) will be accepted. For detailed instructions on submitting comments and additional information on the rulemaking process, see section V of this document (Public Participation).

Docket: The docket, which includes **Federal Register** notices, comments, and other supporting documents/materials, is available for review at *http://www.regulations.gov.* All documents in the docket are listed in the *http://www.regulations.gov* index. However, some documents listed in the index, such as those containing information that is exempt from public disclosure, may not be publicly available.

The docket web page can be found at *http://www.regulations.gov/#!docketDetail;D=EERE-2013-BT-TP-0050.* The docket web page contains simple instructions on how to access all documents, including public comments, in the docket. See section V for information on how to submit comments through *http://www.regulations.gov.*

FOR FURTHER INFORMATION CONTACT:

Ms. Lucy deButts, U.S. Department of Energy, Office of Energy Efficiency and Renewable Energy, Building Technologies Office, EE–5B, 1000 Independence Avenue SW, Washington, DC 20585–0121. Telephone: (202) 287–1604. Email: *ApplianceStandardsQuestions@ee.doe.gov.*

Ms. Elizabeth Kohl, U.S. Department of Energy, Office of the General Counsel, GC–33, 1000 Independence Avenue SW, Washington, DC 20585–0121. Telephone: (202) 586–7796. Email: *elizabeth.kohl@hq.doe.gov.*

For further information on how to submit a comment or review other public comments and the docket, contact the Appliance and Equipment Standards Program staff at (202) 287–1445 or by email: *ApplianceStandardsQuestions@ee.doe.gov.*

SUPPLEMENTARY INFORMATION: DOE proposes to incorporate by reference the following industry standard into 10 CFR part 430:

ANSI/AMCA Standard 230–15 (''AMCA 230–15''), ''Laboratory Methods of Testing Air Circulating Fans for Rating and Certification,'' ANSI approved October 16, 2015.

A copy of this standard is available from Air Movement and Control Association International, Inc. (AMCA), 30 West University Drive, Arlington Heights, IL 60004, (847) 394–0150, or by

going to *http://www.amca.org/store/item.aspx?ItemId=81.*

For a further discussion of this standard, see section IV.N.

Table of Contents

I. Authority and Background
A. Authority
B. Background
II. Synopsis of the Notice of Proposed Rulemaking
III. Discussion
A. Scope of Applicability
B. Proposal for VSD Ceiling Fans
C. Proposed Alternate Stability Criteria for Average Air Velocity Measurements
D. Calculation Methodology for Values Reported on the EnergyGuide Label
1. FTC Airflow
2. FTC Energy Use
3. FTC Estimated Yearly Energy Cost
E. Proposal for Large-Diameter Ceiling Fans With Blade Spans Greater Than 24 Feet
F. Certification Requirements
G. Product-Specific Enforcement Provisions
H. Compliance Dates and Waivers
I. Test Procedure Costs and Impact
1. Cost Impacts for Scope
2. Cost Impacts for Stability Criteria
3. Potential Cost Impacts if the Low Speed Criteria Definition Is Modified
4. Cost Impacts for Other Test Procedure Amendments
J. Other Test Procedure Topics
IV. Procedural Issues and Regulatory Review
A. Review Under Executive Order 12866
B. Review Under Executive Orders 13771 and 13777
C. Review Under the Regulatory Flexibility Act
D. Review Under the Paperwork Reduction Act of 1995
E. Review Under the National Environmental Policy Act of 1969
F. Review Under Executive Order 13132
G. Review Under Executive Order 12988
H. Review Under the Unfunded Mandates Reform Act of 1995
I. Review Under the Treasury and General Government Appropriations Act, 1999
J. Review Under Executive Order 12630
K. Review Under Treasury and General Government Appropriations Act, 2001
L. Review Under Executive Order 13211
M. Review Under Section 32 of the Federal Energy Administration Act of 1974
N. Description of Materials Incorporated by Reference
V. Public Participation
A. Submission of Comments
B. Issues on Which DOE Seeks Comment
VI. Approval of the Office of the Secretary

I. Authority and Background

DOE is authorized to establish and amend energy conservation standards and test procedures for ceiling fans. (42 U.S.C. 6293(b)(16)(A)(i) and (B), and 6295(ff)) DOE's energy conservation standards and test procedures for ceiling fans are currently prescribed at 10 CFR 430.32(s)(1) and (2), and 10 CFR 430.23(w), respectively. The following sections discuss DOE's authority to establish test procedures for ceiling fans and relevant background information regarding DOE's consideration of test procedures for this product.

A. Authority

The Energy Policy and Conservation Act of 1975, as amended (''EPCA''),[1] among other things, authorizes DOE to regulate the energy efficiency of a number of consumer products and certain industrial equipment. (42 U.S.C. 6291–6317) Title III, Part B [2] of EPCA established the Energy Conservation Program for Consumer Products Other Than Automobiles, which sets forth a variety of provisions designed to improve energy efficiency. These consumer products include ceiling fans, the subject of this document. (42 U.S.C. 6291(49), 6293(b)(16)(A)(i) and (B), and 6295(ff))

Under EPCA, DOE's energy conservation program consists essentially of four parts: (1) Testing, (2) labeling, (3) Federal energy conservation standards, and (4) certification and enforcement procedures. Relevant provisions of EPCA include definitions (42 U.S.C. 6291), energy conservation standards (42 U.S.C. 6295), test procedures (42 U.S.C. 6293), labeling provisions (42 U.S.C. 6294), and the authority to require information and reports from manufacturers (42 U.S.C. 6296).

The Federal testing requirements consist of test procedures that manufacturers of covered products must use as the basis for (1) certifying to DOE that their products comply with the applicable energy conservation standards adopted under EPCA, and (2) making representations about the efficiency of those products. (42 U.S.C. 6295(s) and 6293(c)) Similarly, DOE must use these test procedures to determine whether the products comply with any relevant standards promulgated under EPCA. (42 U.S.C. 6295(s))

Federal energy efficiency requirements for covered products established under EPCA generally supersede State laws and regulations concerning energy conservation testing, labeling, and standards. (See 42 U.S.C. 6297) DOE may, however, grant waivers of Federal preemption for particular State laws or regulations, in accordance with the procedures and other provisions of EPCA. (42 U.S.C. 6316(b)(2)(D))

Under 42 U.S.C. 6293, EPCA sets forth the criteria and procedures DOE must follow when prescribing or amending test procedures for covered products. EPCA requires that any test procedures prescribed or amended under this section must be reasonably designed to produce test results that measure energy efficiency, energy use or estimated annual operating cost of a covered product during a representative average use cycle or period of use, and not be unduly burdensome to conduct. (42 U.S.C. 6293(b)(3))

In addition, EPCA requires that DOE amend its test procedures for all covered products to integrate measures of standby mode and off mode energy consumption. (42 U.S.C. 6295(gg)(2)(A)) Standby mode and off mode energy consumption must be incorporated into the overall energy efficiency, energy consumption, or other energy descriptor for each covered product unless the current test procedures already account for and incorporate standby and off mode energy consumption or such integration is technically infeasible. If an integrated test procedure is technically infeasible, DOE must prescribe a separate standby mode and off mode energy use test procedure for the covered product, if technically feasible. (U.S.C. 6295(gg)(2)(A)(ii)) Any such amendment must consider the most current versions of the International Electrotechnical Commission (IEC) Standard 62301 [3] and IEC Standard 62087 [4] as applicable. (42 U.S.C. 6295(gg)(2)(A))

If DOE determines that a test procedure amendment is warranted, it must publish proposed test procedures and offer the public an opportunity to present oral and written comments on them. (42 U.S.C. 6293(b)(2)) EPCA also requires that, at least once every 7 years, DOE review test procedures for each type of covered product, including ceiling fans, to determine whether amended test procedures would more accurately or fully comply with the requirements for the test procedures to not be unduly burdensome to conduct and be reasonably designed to produce test results that reflect energy efficiency, energy use, and estimated operating costs during a representative average use cycle or period of use. (42 U.S.C. 6293(b)(1)(A)) If the Secretary determines, on his own behalf or in

[1] All references to EPCA in this document refer to the statute as amended through America's Water Infrastructure Act of 2018, Public Law 115–270 (October 23, 2018).

[2] For editorial reasons, upon codification in the U.S. Code, Part B was redesignated Part A.

[3] IEC 62301, *Household electrical appliances—Measurement of standby power* (Edition 2.0, 2011–01).

[4] IEC 62087, *Methods of measurement for the power consumption of audio, video, and related equipment* (Edition 3.0, 2011–04).

response to a petition by any interested person, that a test procedure should be prescribed or amended, the Secretary shall promptly publish in the **Federal Register** proposed test procedures and afford interested persons an opportunity to present oral and written data, views, and arguments with respect to such procedures. The comment period on a proposed rule to amend a test procedure shall be at least 60 days and may not exceed 270 days. In prescribing or amending a test procedure, the Secretary shall take into account such information as the Secretary determines relevant to such procedure, including technological developments relating to energy use or energy efficiency of the type (or class) of covered products involved. (42 U.S.C. 6293(b)(2)) If DOE determines that test procedure revisions are not appropriate, DOE must publish notice in **Federal Register** of its determination not to amend the test procedure. (42 U.S.C. 6293(b)(1)(A))

B. Background

DOE's existing test procedures for ceiling fans appear at 10 CFR part 430, subpart B, appendix U, Uniform Test Method for Measuring the Energy Consumption of Ceiling Fans (hereafter ''Appendix U'').

DOE published a final rule in the **Federal Register** on July 25, 2016 (hereafter the ''July 2016 CF TP final rule''), which amended test procedures for ceiling fans in Appendix U. 81 FR 48620. In this document, DOE proposes amendments to the test procedure based generally on questions received from interested parties.

DOE has initially determined that amendments to the ceiling fan test procedure are warranted and is issuing this notice of proposed rulemaking (NOPR) pursuant to 42 U.S.C. 6293(b)(2). DOE is also proposing these amendments in satisfaction of the 7-year review required under 42 U.S.C. 6203(b)(1)(A).

II. Synopsis of the Notice of Proposed Rulemaking

In this NOPR, DOE proposes: (1) To interpret the EPCA definition of ceiling fan to mean those fans offered for mounting only on a ceiling. Any fan, including a ceiling-mount air circulating fan head, offered with other mounting options would not be a ceiling fan under this proposal. DOE also seeks comment on a proposed alternative interpretation. DOE is retaining the exemption for ceiling; fans for which the plane of rotation of the blades is greater than 45 degrees from horizontal, and for which the plane of rotation cannot be adjusted based on the manufacturer's specifications to be less than or equal to 45 degrees from horizontal. These fans are not subject to the test procedure and energy conservation standards established by DOE, but would remain subject to the design requirements of EPCA (2) to specify that VSD ceiling fans that do not also meet the definition of LSSD fan are not required to be tested pursuant to the DOE test method for purposes of demonstrating compliance with DOE's energy conservation standards for ceiling fans or representations of efficiency; (3) for LSSD and VSD ceiling fans, to increase the tolerance for the stability criteria for the average air velocity measurements at low-speed; (4) to codify in regulation existing guidance on the method for calculating several values reported on the Federal Trade Commission (FTC) EnergyGuide label for LSSD and VSD ceiling fans using results from the ceiling fan test procedures in Appendix U to subpart B of 10 CFR part 430 and represented values in 10 CFR part 429; (5) to specify that large-diameter ceiling with blade spans greater than 24 feet do not need to be tested pursuant to the DOE test procedure for purposes of demonstrating compliance with DOE energy conservation standards or representations of energy efficiency are; and (6) to amend certification requirements and product-specific enforcement provisions for ceiling fans to reflect the most recent amendments to the test procedures and energy conservation standards for ceiling fans. Any amended test procedure adopted in this rulemaking will be effective beginning 30 days after publication of a final rule in the **Federal Register**. Representations of energy use or energy efficiency must be based on testing in accordance with this rulemaking, if adopted, beginning 180 days after the publication of a test procedure final rule.

The amendments proposed in this document would provide manufacturers additional certainty in the test procedures and labeling requirements for ceiling fans, and would reduce the testing burden related to the stability criteria. The proposed amendments with regard to air circulating fan heads would clarify the scope of DOE's authority to regulate ceiling fans as defined by EPCA, which does not include air circulating fan heads that do not meet the EPCA definition of a ceiling fan. The proposed amendments would specify that VSD ceiling fans that do not also meet the definition of LSSD fan are not required to be tested pursuant to the DOE test method for purposes of demonstrating compliance with DOE's energy conservation standards for ceiling fans or representations of efficiency, so these costs would not accrue to manufacturers of these VSD fans. As discussed in more detail in section III.C of this NOPR, the proposed increase in the tolerance for the stability criteria for the average air velocity measurements for LSSD and VSD ceiling fans at low speed is expected to reduce the test burden without changing test procedure results. The proposed codification of existing guidance is expected to provide manufacturers greater certainty in determining how to calculate certain values required to be reported on the FTC EnergyGuide label for LSSD and VSD ceiling fans. The estimated cost to test commercially-available large-diameter fans is approximately $4,000 per ceiling fan, but these costs would not accrue for manufacturers of any fans greater than 24 feet in diameter. The proposed amendments to the certification requirements would reflect the current test procedure and recently amended energy conservation standards for ceiling fans. Finally, the proposed amendments to the product-specific enforcement provisions would specify the use of the methods currently in Appendix U for verifying certain ceiling fan characteristics (*i.e.,* blade span, distance between the ceiling and the lowest point of fan blades, blade revolutions per minute, and blade edge thickness).

Additionally, as discussed in more detail in section III of this NOPR, DOE has initially concluded that the amendments being proposed will not impact representations of ceiling fan efficiency made in accordance with the July 2016 CF TP final rule. Thus, retesting should not be required solely as a result of DOE's adoption of the proposed amendments to the test procedures. DOE emphasizes, however, that manufacturers are responsible for the validity of their representations and seeks comment on the initial conclusion that the proposal will not impact representations made according to the July 2016 CF TP final rule and that manufacturers therefore should not be required to retest their products if DOE adopts the proposed rule.

TABLE II.1—SUMMARY OF CHANGES IN PROPOSED TEST PROCEDURE RELATIVE TO CURRENT TEST PROCEDURE

Current DOE test procedure	Proposed test procedure	Attribution
Provides exceptions to the test procedure and energy conservation standards for ceiling fans where the plane of rotation of a ceiling fan's blades is not less than or equal to 45 degrees from horizontal, or cannot be adjusted based on the manufacturer's specifications to be less than or equal to 45 degrees from horizontal.	Interprets the EPCA definition of ceiling fan to mean those fans offered for mounting only on a ceiling and seeks comment on a proposed alternative interpretation. Retains the exceptions to the test procedure and energy conservation standards for ceiling fans that can be suspended from the ceiling, for which the plane of rotation of the ceiling fan's blades is greater than 45 degrees from horizontal, and for which the plane of rotation cannot be adjusted based on the manufacturer's specifications to be less than or equal to 45 degrees from horizontal.	Response to questions from industry, clarification.
Provides a method of testing only those VSD ceiling fans that meet the LSSD ceiling fan definition.	Specifies that VSD ceiling fans that are not also LSSD ceiling fans are not required to be tested pursuant to the DOE test method.	Clarification.
The tolerance for the stability criteria for the average air velocity measurements for LSSD and VSD ceiling fans at low speed is less than five (5) percent.	Increases the tolerance for the stability criteria for the average air velocity measurements for LSSD and VSD ceiling fans at low speed to less than ten (10) percent.	Response to waiver.
Instruction on calculating EnergyGuide Label values based on measurements taken in accordance with Appendix U is provided in a guidance document separate from the CFR.	Codifies the calculation instructions in the CFR	Ease of use.
Includes certification requirements and product-specific enforcement provisions.	Add provisions for verification of represented values to be used in the context of enforcement of the relevant efficiency standards.	Improve reproducibility and repeatability.

DOE seeks comment on the changes proposed in this document and on whether other amendments to the test procedure should be considered.

III. Discussion

A. Scope of Applicability

EPCA defines a ''ceiling fan'' as ''a nonportable device that is suspended from a ceiling for circulating air via the rotation of fan blades.'' (42 U.S.C. 6291(49)) In the July 2016 CF TP final rule, DOE stated that the test procedure applies to any product meeting this definition, including hugger fans, fans designed for applications where large airflow volume may be needed, and highly decorative fans. DOE stated, however, that manufacturers were not required to test the following fans according to the test procedure: Belt-driven ceiling fans, centrifugal ceiling fans, oscillating ceiling fans, and ceiling fans whose blades' plane of rotation cannot be within 45 degrees of horizontal. In this rulemaking, DOE is confirming the scope of its authority pursuant to EPCA to regulate ceiling fans and confirming that its authority in this context is limited to fans that meet the EPCA definition of a ceiling fan. Specifically, DOE interprets the EPCA definition of ceiling fan to mean those fans offered for mounting only on a ceiling. Any ceiling-mount air circulating fan head or other fan that was offered with other mounting options would not be a ceiling fan for purposes of EPCA. DOE also seeks comment on alternative means to differentiate ceiling fans from air circulating fan heads that do not meet the EPCA definition of ceiling fan, as described in this section.

DOE received inquiries since the publication of the July 2016 CF TP final rule whether certain air circulating fan heads [5] would be subject to the DOE test procedures and energy conservation standards. These inquiries indicate that the procedure specified in the July 2016 CF TP final rule, in which testing was not required for ceiling fans whose blades' plane of rotation cannot be within 45 degrees of horizontal,'' [6] could potentially result in some air circulating fan heads that do not meet the EPCA definition of a ceiling fan being classified as ceiling fans subject to testing and compliance with DOE energy conservation standards. This includes air circulating fan heads that may, in addition to any other number of configurations, also be mounted on a downrod.

On May 31 and July 9, 2019, the Air Movement and Control Association (AMCA) submitted letters regarding air circulating fan heads.[7] AMCA stated that air circulating fan heads have distinct characteristics and functions compared to traditional ceiling fans. Specifically, AMCA stated that air circulating fan heads are typically caged/housed and incorporated in products that are primarily offered for sale as floor mounted (portable pedestal) or mounted to vertical structures (wall mount), and are designed to provide concentrated directional airflow.

AMCA also noted that air circulating fan heads do not circulate air like a ceiling fan. Specifically, a ceiling fan will discharge air in the downward direction and the discharge air typically returns to the intake side of the fan with significant momentum, thus creating air circulation. Each pass through the fan increases the average air speed in the space until a steady state circulation of air is achieved. This air circulation pattern is why ceiling fan test procedures require a significant amount of time between activation of the ceiling fan and the measurement of performance data. In contract, air circulating fan heads provide directional, concentrated high speed

[5] Section 5.1.1 of ANSI/AMCA Standard 230–15 (''AMCA 230–15''), ''Laboratory Methods of Testing Air Circulating Fans for Rating and Certification,'' defines *air circulating fan head* as an assembly consisting of a motor, impeller and guard for mounting on a pedestal having a base and column, wall mount bracket, ceiling mount bracket, I-beam bracket or other commonly accepted mounting means.

[6] If the plane of rotation of a ceiling fan's blades is not less than or equal to 45 degrees from horizontal, or cannot be adjusted based on the manufacturer's specifications to be less than or equal to 45 degrees from horizontal, the ceiling fan is not subject to the DOE test procedure and is not subject to the energy conservation standards. Section 2(1) of Appendix U; 10 CFR 430.36(s)(2)(ii)(A).

[7] AMCA's May 31 and July 9, 2019 letters to DOE can be accessed in the Docket here: *https://www.regulations.gov/document?D=EERE-2013-BT-TP-0050-0023.*

airflow targeted at a specific location. The airflow from the air circulating fan head is unlikely to return to the intake side of the fan head with any significant moment and in many cases the discharge air may not return at all; therefore, a circulating pattern is not achieved.

In addition, AMCA stated that air circulating fan heads typically operate at faster speeds (tip speeds) than ceiling fans to produce air that will travel faster and farther for a given fan diameter. Accordingly, AMCA proposed in their letter that DOE clarify the interpretation that air circulating fan heads are not ceiling fans because they have other primary mounting options and operating modes where the fan is not required to be fixed to the ceiling, and additionally provide that the fan head's blade tip speed is greater than 5,500 feet per minute (fpm).[8] AMCA also stated that air circulating fan heads have higher average outlet air speeds (calculated as the volumetric airflow rate (cfm) of the fan at high speed divided by the swept area of the blades (discharge area)) than ceiling fans and recommended a break point of 900 feet per minute as another distinguishing characteristic for large diameter ceiling fans and high speed small diameter ceiling fans.

As stated, EPCA defines ''ceiling fan'' as ''a nonportable device that is suspended from a ceiling for circulating air via the rotation of fan blades.'' (42 U.S.C. 6291(49)) In DOE's view, because the EPCA definition of ceiling fan includes the terms ''nonportable'' and ''suspended from a ceiling,'' it does not include within its scope any device offered for mounting on any surface other than a ceiling, even if it is also offered for mounting on a ceiling. Therefore, as a clarifying interpretation of EPCA's definition of ''ceiling fan,'' DOE proposes to adopt a definition of ceiling fan in 10 CFR 430.2 whose scope would be limited to devices that are offered for mounting only on a ceiling. Any fan, including a ceiling-mount air circulating fan head, offered with other mounting options would not be a ceiling fan for purposes of EPCA.

This interpretation is based a reasoned understanding of the plain meaning of the text of the definition, taking into account the context of the statute as a whole. Specifically, the phrase ''suspended from the ceiling for circulating air,'' is a clear description of the use of a ''ceiling fan,'' *i.e.,* where it is installed and for what purpose. It follows, then, that a device that is *not* offered for mounting on a ceiling is not within the scope of this definition.

Moreover, to be within the scope of the ''ceiling fan'' definition, the device must be ''nonportable.'' An overly strict construction of this term would apply only to devices that, literally, *cannot* be moved. Within the context of DOE's understanding of the range of products offered for the purpose of circulating air (*i.e.,* ''fans'') that can be suspended from a ceiling, a reasonable construction of the term ''nonportable'' would be devices that are not offered for mounting on a surface other than a ceiling, *i.e.,* devices offered for mounting *only* on a ceiling. This would exclude as ''portable'' products offered with the option to be used in multiple locations over time, such as on a wall or floor, even if one of those options includes mounting the product to a ceiling.

DOE therefore concludes that EPCA's definition of ''ceiling fan,'' by its plain meaning, does not include within its scope any device that is offered for mounting on a surface other than a ceiling, even if it is also offered for mounting on a ceiling. In addition, any ceiling-mount air circulating fan head that did not meet this criterion (*i.e.,* offered with other mounting options) would not be a ceiling fan for purposes of EPCA. DOE would make clear this interpretation of the statutory definition of ''ceiling fan'' by adopting the following definition in DOE regulations at 10 CFR 430.2: ''Ceiling fan means a nonportable device that is suspended from a ceiling for circulating air via the rotation of fan blades. For purposes of this definition, the term ''suspended from a ceiling'' means offered for mounting on a ceiling, and the term ''nonportable'' means not offered for mounting on a surface other than a ceiling.''

DOE also seeks comment on an alternative proposal to differentiate air circulating fan heads or other fans that do not meet the EPCA definition of a ceiling fan. Any air circulating fan head or other fan that does not meet any one of the criteria specified in the EPCA definition (''nonportable'', ''suspended from a ceiling'', and ''for circulating air via the rotation of fan blades'') is not a ceiling fan for purposes of EPCA. DOE proposes to interpret the elements of the statutory definition of ceiling fan in the following way:

(1) Portable—Meaning, the fan is offered for mounting on surfaces other than or in addition to the ceiling, including the ceiling mount version of such fans. In contrast, a ceiling fan is only mounted to the ceiling and would typically not perform properly if mounted in any other configuration. DOE also notes that once a ceiling fan is mounted to the ceiling, it is often hard-wired in place, which DOE understands is not always the case for air circulating fan heads;[9]

(2) Not suspended from the ceiling—This criterion is determined with reference to the point of manufacture, because DOE regulates manufacturers under EPCA. Air circulating fan heads or other fans that are not manufactured with a means to be suspended from the ceiling would not meet the statutory definition. With reference to air circulating fan heads, in many cases, the manufacturer produces the air circulating fan head, and the customer supplies the pipe or other means of suspension. Brackets may be supplied for mounting, but the customer decides where and how to mount the air circulating fan head (*i.e.,* to the wall, ceiling, or some other appropriate location). In contrast a ceiling fan is meant only to be suspended from the ceiling and is not designed to be mounted in any other way.

(3) Not for the purpose of circulating air—As noted previously, AMCA stated in its July 9 letter, which was specific to air circulating fan heads, that air circulating fan heads do not circulate air like a ceiling fan. Specifically, a ceiling fan will discharge air in the downward direction and the discharge air typically returns to the intake side of the fan with significant momentum, thus creating air circulation. Each pass through the fan increases the average air speed in the space until a steady state circulation of air is achieved. This is not the case with air circulating fan heads, which provide directional, concentrated high speed airflow targeted at a specific location. The airflow from the air circulating fan head is unlikely to return to the intake side of the fan head with any significant momentum and in many cases the discharge air may not return at all; therefore, a circulating pattern is not achieved.

Given the above, DOE alternatively proposes to specify the following in DOE regulations at 10 CFR 430.2: ''Ceiling fan means a nonportable device that is suspended from a ceiling for

[8] Tip speed is calculated as blade diameter × 3.14159 × rotational speed in revolutions per minute (RPM). The tip speed value was based on Table 90.1 from Underwriters Laboratory (UL) ceiling fan safety standard (UL Standard 507–2017, ''Standard for Electric Fans'').

[9] One manufacturer provided information on some air circulating fan heads that are not typically hardwired: Three phase units since there is no truly standardized cord, and hazardous location ('explosion proof') units where by code they need to have specific wiring that does not allow for a standard cord. While some of these may be supplied with a cord by the customer, in some cases the customer may decide to hard wire them.

circulating air via the rotation of fan blades. DOE interprets this term to mean that any fan, including those meeting the definition of an ''air circulating fan head'' in AMCA 230–2015, that does not have a ceiling mount option, or that has more than one mounting option (even if one of the mounting options is a ceiling mount), is not a ceiling fan. Such fans do not meet the statutory criteria of being ''nonportable'', ''suspended from the ceiling'', and ''for the purpose of circulating air.'' '' Pursuant to the definition of ''air circulating fan head'' in AMCA 230–15, an air circulating fan head is intended for mounting by a number of means, which can include ceiling mount along with other types of mounts, such a pedestal, wall or I-beam bracket.

In making these proposals, DOE notes that the design standards of EPCA applicable to ceiling fans do not appear to be generally applicable to air circulating fan heads that do not meet the criteria of the statutory definition. Specifically, EPCA requires all ceiling fans manufactured after January 1, 2007, to have: (i) Fan speed controls separate from any lighting controls; (ii) Adjustable speed controls (either more than 1 speed or variable speed); and (iii) The capability of reversible fan action. (42 U.S.C. 6295(ff)(1)(A). DOE is not aware of any air circulating fan head designs where the fan speed and lighting controls are not separate. Most air circulating fan heads are not designed with more than 1 speed because it would be prohibitively expensive, especially for explosion proof air circulating fan heads, for example. And, because air circulating fan heads are meant to provide directed air flow, the necessity for reverse action is not applicable or relevant, because the fan can simply be moved or redirected. As a result, it makes sense that air circulating fan heads to which these criteria do not apply would not be considered ceiling fans for purposes of EPCA.[10] Applying the design standards of EPCA to those fans, including air circulating fan heads that do not meet the DOE definition for ceiling fan is not appropriate. Air circulating fan heads could, however, be considered a type of commercial or industrial fan pursuant to 42 U.S.C. 6311. EPCA authorizes DOE to consider establishing ''fans'' and ''blowers'' as types of covered commercial or industrial equipment. 42 U.S.C. 6311(2)(B)(ii) and (iii).

DOE notes that under this proposal, the design standards of EPCA applicable to ceiling fans would not apply to fans that do not meet the criteria of the statutory definition, including air circulating fan heads as defined in AMCA 230–15 offered for mounting on surfaces other than or in addition to the ceiling (including the ceiling mount versions of such fans). The energy conservation standards established by DOE would also not be applicable to such products.

AMCA's letter also suggests that a minimum tip speed/outlet air speed is a differentiator for distinguishing between air circulating fan heads and ceiling fans. This differentiator may be appropriate to determine whether the air circulating fan head is for the purpose of circulating air. DOE requests comment and supporting data on what tip speed/outlet air speed is appropriate to differentiate ceiling fans from air circulating fan heads. DOE also seeks comment on whether, and if so, how to update the regulatory criterion at proposed Appendix U, Section 2. Scope, to clarify that air circulating fan heads above a certain tip speed/outlet air speed are not for the purpose of circulating air, as specified in the EPCA criteria for ceiling fans.

DOE is not proposing to change the existing requirement that ceiling fans for which the plane of rotation of the blades is greater than 45 degrees from horizontal, and for which the plane of rotation cannot be adjusted based on the manufacturer's specifications to be less than or equal to 45 degrees from horizontal are not subject to the test procedure or energy conservation standards established by DOE. DOE seeks comment on whether this provision is necessary to retain in light of the proposal described in the preceding paragraphs for air circulating fan heads.

B. Proposal for VSD Ceiling Fans

In the July 2016 CF TP final rule, DOE amended test procedures, located in Appendix U to subpart B of 10 CFR part 430, for measuring ceiling fan efficiency. The adopted test procedures were largely based on the ENERGY STAR test procedure, ''Energy Star Testing Facility Guidance Manual: Building a Testing Facility and Performing the Solid State Test Method for ENERGY STAR Qualified Ceiling Fans, Version 1.1,'' and AMCA 230–15, with some modifications. See 81 FR 48620. The ENERGY STAR test procedure measures the air velocity using air velocity sensors to calculate airflow, while AMCA 230–15 uses a load cell to measure thrust, which is then used to calculate airflow.

The DOE test procedure established by the July 2016 CF TP final rule requires LSSD and high-speed small-diameter (HSSD) ceiling fans to be tested using methods based on air velocity measurements. The DOE test method is slightly different depending on whether a small-diameter ceiling fan meets the definition of either LSSD ceiling fan or HSSD ceiling fan, which is based on maximum fan tip speed and thickness at the edge of the fan blades. DOE required testing LSSD ceiling fans at their lowest and highest speed settings, but required testing HSSD ceiling fans only at high speed. 81 FR 48620, 48626. For LSSD ceiling fans, while most have one or more speeds between high and low, DOE required testing at only high and low speed to limit test burden and avoid confusion regarding the definition of medium speed for ceiling fans with more than three speeds. For HSSD ceiling fans, DOE determined that they typically do not have discrete speeds, and therefore speeds other than high may not be well defined; thus, testing is only required at high speed. Id.

In the July 2016 CF TP final rule, DOE prescribed a test method for LSSD and HSSD ceiling fans. However, the HSSD ceiling fan definition excluded VSD ceiling fans. Therefore, the current test method provides a method of testing only those VSD ceiling fans that meet the LSSD ceiling fan definition. In this NOPR, DOE is proposing to specify explicitly that VSD ceiling fans that do not also meet the definition of LSSD fan are not required to be tested pursuant to the DOE test method for purposes of demonstrating compliance with DOE's energy conservation standards for ceiling fans or representations of efficiency.

DOE requests comment on the proposal. See section V.B for a list of issues on which DOE seeks comment.

C. Proposed Alternate Stability Criteria for Average Air Velocity Measurements

In the July 2016 CF TP final rule, DOE established stability criteria for the air

[10] DOE received information from a manufacturer supporting this assertion. Specifically, the manufacturer did not know of no air circulating fan heads that are provided with lighting as an integral part of the fan head. The only application of which the manufacturer was aware where an air circulating fan head and a light are provided is a dock fan: In terms of numbers, the manufacturer indicated these are fairly rare (probably only 1 to 2% of air circulating fan heads at most), and the light and air circulating fan head are really both added to a separate articulating device. The manufacturer did not know if the light is wired separately of the air circulating fan head, but expected is that it is. In general, the manufacturer offered that there is no utility to be gained by incorporating a light into an air circulating fan head because unlike a ceiling fan, which uses the same (and often only) ceiling electrical source, the air circulating fan head is not designed for this type of hard wire connection.

velocity measurements for LSSD and HSSD ceiling fans. Specifically, section 3.3.2(1) of Appendix U to subpart B of 10 CFR part 430 requires that the average air velocity for each sensor must vary by less than 5 percent compared to the average air velocity measured for that same sensor in a successive set of air velocity measurements. Stable measurements are required to be achieved at high speed only for HSSD ceiling fans, and at both low and high speed for LSSD ceiling fans. However, ceiling fans with low speeds that produce air velocities lower than 40 feet per minute (fpm) may have trouble meeting this stability criteria. Since the July 2016 CF TP final rule, DOE has received several inquiries from manufacturers citing difficulties with meeting the stability criteria at low speed for certain basic models of ceiling fans. DOE evaluated available test data to investigate these difficulties and to determine whether increased tolerances for air velocity stability criteria for low speed tests could be used to reduce test burden without materially affecting the results of the test procedure. Specifically, DOE used the test data from ceiling fans tested at a third-party testing facility to compare the airflow and efficiency results of the test procedure with the 5 percent and 10 percent air velocity stability criteria applied to low speed. DOE found that increasing the stability criteria to 10 percent for low speed would allow more fans to meet the stability criteria and reduce the number of successive measurements needed to do so without materially changing the efficiency results of the test procedure. By reducing the number of successive measurements needed this proposed amendment would reduce the test burden for manufacturers, including the total test time per unit for low speed tests for ceiling fans. DOE estimates that manufacturers of LSSD and VSD ceiling fans may save approximately 20 minutes in testing time due to the relaxation of the air velocity stability requirements. The potential cost impacts of this proposal are discussed in section III.I of this NOPR.

An alternative approach that DOE also considered was applying stability criteria to airflow instead of air velocity (as is required under the current DOE test procedure). However, DOE's review concluded that applying stability criteria to airflow instead of air velocity could result in less repeatability by allowing a greater variation in airflow and efficiency results between multiple tests of the same fan. Per the current DOE test procedure, air velocity is measured at each sensor along the sensor arm, and airflow is calculated based on these measurements. The air velocity measurements provide more information than the calculated airflow because they indicate the amount and location of air provided by the fan within the effective area (*i.e.,* the air profile). DOE found that large variations in air profile often indicate test room instability (*e.g.,* localized temperature gradients that effect airflow). Applying stability criteria to the air velocity measurements ensures that successive sets of measurements result in similar air profiles, which is indicative of test room stability. On the other hand, DOE observed that stability criteria applied only to airflow could be met with large variations in air profile (*i.e.,* at unstable test room conditions). This allows for airflow, and in turn fan efficiency, to vary significantly between multiple tests of the same fan because stable airflow can be achieved at varied test room conditions. DOE expects that the purchase and set up of additional thermocouples in the test room would be required to monitor and ensure test room stability to avoid these repeatability issues. In DOE's own testing evaluation, DOE installed thermocouple grids within the test room when evaluating the impact of applying the stability criteria to airflow in order to get repeatable results. Therefore, DOE concluded that stability criteria based on air velocity measurements leads to more repeatable test results and avoids the potential need for additional set up and test room modifications and costs to monitor test room stability throughout the tests.

Therefore, in this NOPR, DOE is proposing to increase the air velocity stability criteria for testing at low speed from 5 percent to 10 percent. DOE does not expect this proposed amendment to require manufacturers to re-test LSSD and VSD ceiling fans that have been tested and rated per the current test procedure. The proposed amendment increases the tolerance of the stability criteria for low speed tests established in the July 2016 CF TP final rule for fans that require testing at low speed. Any test conducted in accordance with the current test procedure (under which the stability criteria provides tolerance that is more narrow than that being proposed) would meet the stability criteria specified in this proposal. By letter dated June 14, 2017, BAS submitted a petition for waiver and application for interim waiver for specified basic models of low-speed small-diameter ceiling fans. The proposal in this NOPR is consistent with the methodology of the alternative test method requested by BAS for these basic models and in the interim waiver DOE granted to BAS. In addition, this NOPR fulfills the statutory requirement for DOE to publish in the **Federal Register** a notice of proposed rulemaking and subsequent final rule to amend its regulations so as to eliminate any need for the continuation of such waiver as soon as practicable. 10 CFR 430.27(l).

In the July 2016 CF TP final rule, DOE also established measurement tolerances for air velocity sensors. Section 3.2 of Appendix U states that air velocity sensors must have accuracies within ±5 percent of reading or 2 feet per minute (fpm), whichever is greater. For this NOPR, DOE proposes to add the 2 fpm provision to the stability criteria to provide consistency between the stability criteria for air velocity measurements and the accuracy of air velocity sensors. Specifically, DOE proposes the following stability criteria for low speed tests; the average air velocity for each sensor must vary by less than 10 percent or 2 fpm, whichever is greater, compared to the average air velocity measured for that same sensor in a successive set of air velocity measurements. DOE proposes to add a 2 fpm limitation to the existing stability criteria for high speed tests such that the average air velocity for each sensor must vary by less than 5 percent or 2 fpm, whichever is greater, compared to the average air velocity measured for that same sensor in a successive set of air velocity measurements. In this NOPR, DOE is not proposing to change the stability criteria for average power measurement for either high or low speed tests, which would remain at 1 percent.

DOE requests comment on the proposed stability criteria. See section V.B of this NOPR for a list of issues on which DOE seeks comment.

Section 3.3.2 of Appendix U to subpart B of 10 CFR part 430 requires that LSSD fans be tested at low speed. Appendix U defines low speed to mean ''the lowest available ceiling fan speed, *i.e.,* the fan speed corresponding to the minimum, non-zero, blade RPM''. Through testing and industry inquiry, DOE is aware that, in the lowest available fan speed, some ceiling fans have an extremely low rotation rate, leading to atypically low airflow. The airflow is so low that: (1) The airflow sensors used by third-party labs, which are appropriate for most ceiling fans, cannot meet the accuracy requirements of the test procedure; and (2) labs are having trouble meeting the stability

criteria despite routinely achieving stability for other fans.

To avoid testing low fan speeds that consumers are unlikely to use to circulate air or that will be impossible or overly burdensome to test, DOE is considering modifying the definition of low speed. Specifically, DOE is considering defining the low speed as the lowest available ceiling fan speed for which fewer than half or three, whichever is fewer, sensors on any individual axis are measuring less than 30 feet per minute. Thirty feet per minute is the threshold below which practicable air velocity sensors can no longer meet the test procedure accuracy and stability requirements. In conjunction, DOE is considering explicit instructions to start at the lowest speed and move to the next highest speed until the modified low speed criteria are met.

DOE seeks comment on whether testing the fan at the lowest available ceiling fan speed as currently required measures the energy use during a representative average use cycle or period of use, as required by EPCA (42 U.S.C. 6293). DOE seeks comment on whether, in the alternate, testing at low speed defined as the lowest available ceiling fan speed for which fewer than half or three, whichever is fewer, sensors on any individual axis are measuring less than 30 feet per minute, would meet these EPCA requirements. Such a test procedure would also require testing to start at the lowest speed and move to the next highest speed until the modified low speed criteria are met. DOE seeks comment on whether this alternate test method would affect the measured energy use of the ceiling fan as compared to the current test procedure.

DOE also seeks comment on whether this alternate test method would reduce the test burden for manufacturers, including the total test time per unit for low speed tests for ceiling fans. The test procedure does not currently specify when to conclude a test if stability criteria cannot be met. In this case, third-party labs have local operating procedures (LOP) that dictate, based on each individual labs' business model, how long to run a test before deeming it invalid. The low speeds in question could require labs to run tests for the full duration of their LOP limit if stability is not met. The alternate test method could mitigate the occurrence of these long, invalid test runs. DOE estimates that manufacturers of LSSD and VSD ceiling fans may save approximately 60 minutes in per unit testing time due to the new low speed criteria. The potential cost impacts are discussed in III.I.3 of this NOPR.

D. Calculation Methodology for Values Reported on the EnergyGuide Label

The U.S. Federal Trade Commission (FTC) adopted a revised EnergyGuide label in a September 15, 2016 Energy Labeling final rule. 81 FR 63634. The rule is applicable to LSSD and VSD ceiling fans, and requires specification of values for certain metrics related to the ceiling fan's performance, including ceiling fan efficiency.[11] See 16 CFR 305.13. DOE subsequently issued a guidance document explaining how to calculate these values, based on measurements taken in accordance with Appendix U.[12] DOE proposes to codify these calculation methods at 10 CFR 429.32(a)(3).

An example of the U.S. FTC's EnergyGuide label for LSSD and VSD ceiling fans is shown in Figure III.1.

[11] In the September 2016 Energy Labeling final rule, the FTC indicated it will seek comment on the need for, and content of, fan labels for high-speed small-diameter and large-diameter ceiling fans. 81 FR 63634, 63637.

[12] *https://www1.eere.energy.gov/buildings/appliance_standards/pdfs/ftc_label_calc_method_2016-10-21.pdf.*

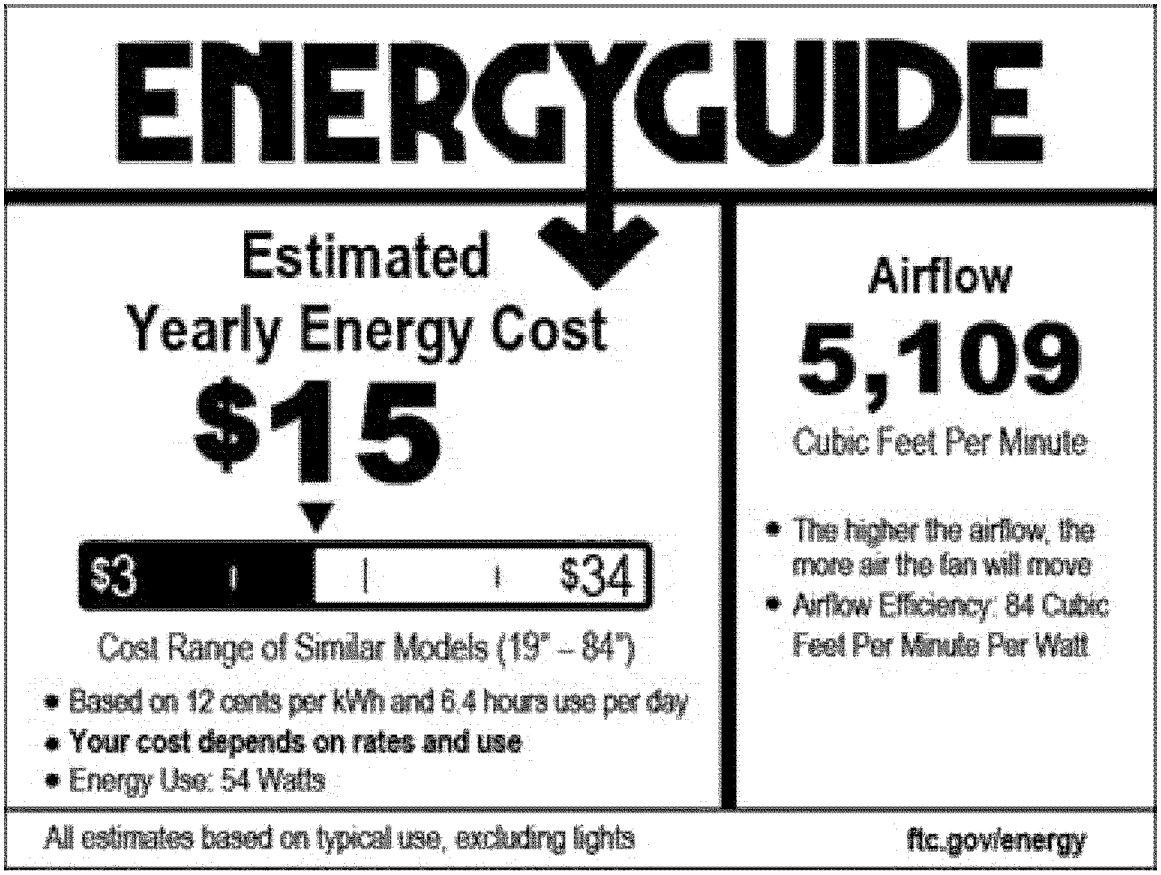

Figure III.1 Example U.S. Federal Trade Commission EnergyGuide label for LSSD and VSD ceiling fans

The EnergyGuide label reports values for four metrics: (1) Efficiency (labeled as ''Airflow Efficiency''), (2) FTC airflow (labeled as ''Airflow''), (3) FTC energy use (labeled as ''Energy Use''), and (4) FTC estimated yearly energy cost (labeled as ''Estimated Year Energy Cost''). The EnergyGuide label's ''Airflow Efficiency'' value corresponds to the ceiling fan's represented value of efficiency (see 10 CFR 429.32(a)), in cubic feet per minute per watt, which is defined and measured according to the July 2016 CF TP final rule. Calculation methods for the other three values are provided in subsections III.D.1 through III.D.3 of this NOPR.

1. FTC Airflow

For LSSD and VSD ceiling fans, FTC airflow represents the weighted-average airflow of a ceiling fan, where the weighted average is based on an average of airflow at low and high fan speeds. The weight given to each speed is the average operating hours at that speed normalized by the total average operating hours in active mode. The average operating hours come from Table 3 in Appendix. DOE proposes to include in 10 CFR part 429 the following equation, as specified in the current guidance, to calculate this value:

$$Airflow_{FTC} = \frac{CFM_{Low} \times 3.0 + CFM_{High} \times 3.4}{6.4}$$

Where:

$Airflow_{FTC}$ = represented value for FTC airflow, rounded to the nearest CFM,

CFM_{Low} = represented value of measured airflow, in cubic feet per minute, at low fan speed, and

CFM_{High} = represented value of measured airflow, in cubic feet per minute, at high fan speed.

Section 3.3 of Appendix U specifies the procedures for measuring the airflow at the high and low speed settings. The measurements of airflow for each setting specified by the equation above must be based on the represented value of measured airflow from a sample of at least two ceiling fans, in accordance with the requirements of 10 CFR 429.32(a)(2)(i). The represented value for FTC airflow is then calculated using the represented value of measured airflow for each setting specified by the equation.

2. FTC Energy Use

For LSSD and VSD ceiling fans, FTC energy use represents the weighted-average power consumption of the ceiling fan, where the weighted average is based on an average of the power consumption at low and high fan speeds and in standby mode. The weight given

to each speed and to standby mode is the average operating hours at that setting normalized by the total average operating hours in active mode. As with FTC airflow, the average operating hours come from Table 3 in Appendix U. DOE proposes to include in 10 CFR part 429 the following equation, as specified in the current guidance, to calculate this value:

$$Energy\ Use_{FTC} = \frac{W_{Low} \times 3.0 + W_{High} \times 3.4 + W_{Sb} \times 17.6}{6.4}$$

Where:

$Energy\ Use_{FTC}$ = represented value for FTC Energy Use, rounded to the nearest watt,

W_{Low} = represented value of measured power consumption, in watts, at low fan speed, pursuant to paragraph (a)(2)(ii) of this section,

W_{High} = represented value of measured power consumption, in watts, at high fan speed, pursuant to paragraph (a)(2)(ii) of this section, and

W_{Sb} = represented value of measured power consumption, in watts, in standby mode, pursuant to paragraph (a)(2)(ii) of this section.

Section 3.3 of Appendix U outlines the procedures for measuring the power consumption at the high and low speed settings, as well as in standby mode (if applicable). The measurements of power consumption for each setting specified by the equation above must be based on the represented value of power consumption measured from a sample of at least two ceiling fans, in accordance with the requirements of 10 CFR 429.32(a)(2)(ii). The represented value for FTC energy use is then calculated using the represented value of measured power consumption for each setting specified by the equation.

3. FTC Estimated Yearly Energy Cost

For LSSD and VSD ceiling fans, FTC estimated yearly energy cost represents the estimated cost to a consumer of the energy consumed in operating a ceiling fan for a year. Time spent at low speed, high speed, and in standby mode is based on the average operating hours listed in Table 3 in Appendix U. DOE proposes to include in 10 CFR part 429 the following equation, as specified in the current guidance, to calculate this value:

$$EYEC_{FTC} = \frac{W_{Low} \times 3.0 + W_{High} \times 3.4 + W_{Sb} \times 17.6}{1000} \times 365 \times 0.12$$

Where:

$EYEC_{FTC}$ = represented value for FTC estimated yearly energy cost, rounded to the nearest dollar, and all other variable designations are the same as for the equation for FTC energy use.

In calculating this value, the average electricity cost and daily operating hours in active mode are assumed to be 12 cents per kilowatt-hour [13] and 6.4 hours per day, respectively (as displayed on the sample EnergyGuide label in Figure III.1). Section 3.3 of Appendix U to subpart B of 10 CFR part 430 outlines the procedures for measuring the power consumption at the high and low speed settings, as well as in standby mode (if applicable). The measurements of power consumption for each setting specified by the equation above must be based on the represented value of power consumption measured from a sample of at least two ceiling fans, in accordance with the requirements of 10 CFR 429.32(a)(2)(ii). The represented value for FTC estimated yearly energy cost is then calculated using the represented value of measured power consumption for each setting specified by the equation.

[13] 12 cents per kilowatt-hour is the cost of energy specified for the Federal Trade Commission's EnergyGuide label. 81 FR 63633 (September 15, 2016)

E. Proposal for Large-Diameter Ceiling Fans With Blade Spans Greater Than 24 Feet

Appendix U requires that large-diameter ceiling fans (*i.e.,* fans with blade spans greater than seven feet) be tested at up to five speeds, and at the five highest speeds for fans with six or more discrete speeds. Section 3.4.1 of Appendix U states that this test method for large-diameter ceiling fans is applicable to ceiling fans up to 24 feet in diameter. In the July 2016 CF TP final rule, DOE included this diameter limit because DOE was unaware of any commercially-available large-diameter ceiling fans with blade spans greater than 24 feet. 81 FR 48620, 48632 (July 25, 2016). Since that time, DOE has received an inquiry about how such a fan would be tested.

The DOE test method for large-diameter ceiling fans incorporates by reference AMCA 230–15, which does not specify a maximum blade span limit. In addition, AMCA 230–15 provides minimum clearances for testing based on blade span so that the required test room dimensions are dynamic and allow for testing of fans larger than 24 feet. In the previous rulemaking, Big Ass Solutions (BAS) recommended that the DOE test procedure not include a blade span limit for the large-diameter test method to be consistent with AMCA 230–15. (BAS, Docket ID: EERE–2013–BT–TP–0050, No. 13, p. 7) In the rulemaking to amend the energy conservation standards for ceiling fans, however, DOE did not contemplate standards for large-diameter fans with blade spans of greater than 24 feet because none were available on the market at that time. 82 FR 6826, 6843.

Users of ceiling fans with a blade span larger than 24 feet may operate them differently than users of fans with a blade span less than 24 feet. Because DOE did not consider the applicability of the current energy conservation standards to large-diameter fans with blade spans greater than 24 feet, and because the current DOE test procedure specifies a blade span limit of 24 feet, DOE proposes in this rulemaking that large-diameter fans with blade spans of greater than 24 feet do not need to be tested pursuant to the DOE test procedure for purposes of determining compliance with DOE energy conservation standards or making other representations of efficiency. DOE requests comment on its proposal. DOE also requests comment on the availability of sufficient testing facilities for large-diameter fans, including those larger than 24 feet in diameter. See section V.B of this NOPR for a list of issues on which DOE seeks comment.

F. Certification Requirements

The procedures required for determination, certification, and enforcement of compliance of covered products with the applicable conservation standards are set forth in 10 CFR part 429. Ceiling fan manufacturers [14] must submit certification reports for ceiling fan basic models before they are distributed in commerce. 10 CFR 429.12. The current requirements for certification reports for ceiling fans correspond to the design requirements specified in EPCA. (42 U.S.C. 6295(ff)(1)) These requirements are set forth at 10 CFR 429.32(b), which requires reporting of the number of speeds within the ceiling fan controls, and a declaration that the manufacturer has incorporated the applicable design requirements. These certification requirements do not reflect the amended energy conservation standards adopted in the recent ceiling fan energy conservation standards final rule (hereafter the ''January 2017 CF ECS final rule'').[15] 82 FR 6826 (January 19, 2017).

In this NOPR, DOE proposes to amend the certification requirements for ceiling fans to include product-specific information that would be required to certify compliance with the amended energy conservation standards established in January 2017 CF ECS final rule. The product-specific information is necessary to determine the minimum allowable ceiling fan efficiency and the proper category of certain ceiling fans, like multi-mount and/or multi-head ceiling fans. DOE proposes to require that certification reports include the following public product-specific information for each ceiling fan basic model: (1) Represented blade span in inches; (2) represented ceiling fan efficiency in CFM/W; (3) for small-diameter ceiling fans, a declaration whether the fan is a multi-head ceiling fan; and (4) for low-speed small-diameter ceiling fans, a declaration whether the ceiling fan is a multi-mount ceiling fan. For each ceiling fan basic model, DOE also proposes to require additional product-specific information that would not be included in the public CCMS database. These include: (1) For small-diameter ceiling fans, blade edge thickness (in), airflow (CFM) at high speed, and blade revolutions per minute (RPM) at high speed; and (2) for LSSD ceiling fans, the represented distance (in) between the ceiling and the lowest point on the fan blades. Manufacturers are already required to determine these values if making representations under the current test procedure for ceiling fans and will be required to use these values to ensure the products they distribute in commerce comply with the amended energy conservation standards.

In this NOPR, DOE also proposes amendments to 10 CFR 429.32 to specify that represented values are to be determined consistent with the test procedures in Appendix U and to specify rounding requirements for represented values. DOE proposes that manufacturers round any represented value of ceiling fan efficiency, expressed in cubic feet per minute per watt (CFM/W), to the nearest whole number. DOE also proposes the following: Any represented value of blade span shall be the mean of the blade spans measured for the sample selected as described in 10 CFR 429.32(a)(1), rounded to the nearest inch; any represented value of blade RPM shall be the mean of the blade RPMs measured for the sample selected as described in 10 CFR 429.32(a)(1), rounded to the nearest RPM; any represented value of blade edge thickness shall be the mean of the blade edge thicknesses measured for the sample selected as described in 10 CFR 429.32(a)(1), rounded to the nearest tenth of an inch; and any represented value of the distance between the ceiling and the lowest point on the fan blades shall be the mean of the distances measured for the sample selected as described in 10 CFR 429.32(a)(1), rounded to the nearest quarter of an inch.

DOE is also proposing updates to the product class definitions included in Appendix U to reference the proposed represented value provisions to specify that the product class for each basic model is determined using the represented values of blade span, blade RPM, blade edge thickness, and the distance between the ceiling and the lowest point on the fan blades.

Blade edge thickness and the distance between the ceiling and the lowest point on the fan blades are used to determine the product class to which a basic model belongs. The July 2016 CF TP final rule did not provide instructions on how to measure these parameters. In this NOPR, DOE is proposing to include these instructions in Appendix U to subpart B of 10 CFR part 430 to ensure these parameters are measured consistently for representations and verification. Specifically, DOE proposes that blade edge thickness for small diameter fans be measured at the fan blade leading edge (in the forward direction) with an instrument having a measurement resolution of at least a tenth of an inch. DOE has observed that blade edge thickness is typically measured with calipers or a tape measure, either of which could meet the proposed measurement resolution requirement. Ceiling fan blades do not have uniform shapes, including blade edge thickness variations and tapered tips or leading edges. DOE proposes the following instructions for measuring blade edge thickness to ensure test procedure reproducibility, given these variations in blade characteristics: (1) Measure at the point at which the blade is thinnest along the radial length of the fan blade and is greater than or equal to one inch from the tip of the fan blade, and (2) Measure one inch from the leading edge of the fan blade. These provisions are proposed to account for ceiling fan blades that have tapered tips or tapered leading edges. DOE also proposes to use an instrument having a measurement resolution of at least 0.25 inches to measure the distance between the ceiling and the lowest point on the ceiling fan blades for LSSD ceiling fans. DOE has observed that this measurement is typically taken using a tape measure, which should easily meet the proposed measurement resolution requirement.

Blade span is also used to determine the product class to which a basic model belongs. The July 2016 CF TP final rule required blade span to be determined by measuring the lateral distance from the center of the axis of rotation of the fan blades to the furthest fan blade edge from the center of the axis of rotation, and then multiplying this distance by two. In this NOPR, DOE is proposing to add to these instructions to ensure that blade span is measured consistently for representations and verification. Specifically, DOE is proposing to measure the lateral distance at the resolution of the measurement instrument, using an instrument with a measurement resolution of least 0.25 inches, and then multiply this distance by two to determine blade span. As in the July 2016 CF TP final rule, after multiplying the lateral distance by two, blade span

[14] Under EPCA, ''manufacture'' means ''to manufacture, produce, assemble, or import.'' 42 U.S.C. 6291(10).

[15] On January 31, 2017, DOE temporarily postponed the effective date of the January 2017 CF ECS final rule. See 82 FR 8806. DOE further temporarily postponed the effective date of that energy conservation standards regulation until September 30, 2017, to allow the Secretary, who was confirmed and began work in his position March 3, 2017, the opportunity to review and consider the new regulation. See 82 FR 14427, Mar. 21, 2017. On May 24, 2017, DOE published the completion of the review of the final rule amending energy conservation standards for ceiling fans, and confirmed that compliance will remain as required with the January 19 final rule, without change. 82 FR 23723.

must be rounded to the nearest whole inch.

G. Product-Specific Enforcement Provisions

In the January 2017 CF ECS final rule, DOE's amended energy conservation standards are expressed as the minimum allowable ceiling fan efficiency (in terms of CFM/W) as a function of ceiling fan blade span, in inches, for each ceiling fan product class. DOE has also defined ceiling fan product classes based on certain characteristics, including the blade span, distance between the lowest point of the fan blades and the ceiling, RPM at high speed, and blade edge thickness. Represented values, including certified values, of each of these characteristics would be determined in accordance with the proposed provisions of 10 CFR 429.32.

DOE proposes to add provisions to 10 CFR 429.134 for verification of these represented values in 10 CFR 429.134, to be used in the context of enforcement of the relevant efficiency standards. Each of the following paragraphs describes the proposed DOE verification provisions for each parameter. In each case, DOE would measure the relevant characteristic for each individual unit in accordance with the test requirements of Appendix U.

DOE proposes to consider the represented blade span valid if the rounded measurement(s) (either the measured value for a single unit, or the mean of the measured values for a multiple unit sample, rounded to the nearest inch) are the same as the represented blade span. Blade span may vary slightly between ceiling fan units due to manufacturing tolerances and blade warpage. However, the proposed rounding provisions for blade span (10 CFR part 429) would require that the blade span be rounded to the nearest inch. This effectively would provide a range of approximately 1 inch that would require the same minimum ceiling fan efficiency. For example, a blade span of 52.4 inches would be rounded down to 52 inches, and a blade span of 51.5 inches would also be rounded to 52 inches. This range is larger than the expected variation in blade span due to manufacturing variation or blade warpage. Therefore, DOE is not proposing an additional tolerance for blade span verification. DOE proposes that if the represented blade span is found to be valid, that blade span would be used as the basis for calculating minimum allowable ceiling fan efficiency. If the represented blade span is found to be invalid, the rounded measured blade span would serve as the basis for calculating the minimum allowable ceiling fan efficiency.

DOE proposes that the distance between the lowest point of the fan blades and the ceiling for each LSSD unit be rounded to the nearest quarter of an inch. This effectively would provide a tolerance range of approximately 0.25 inches. DOE proposes to consider the represented distance between the lowest point of the fan blades and the ceiling valid if the measurement(s) (either the measured value for a single unit, or the mean of the measured values for a multiple unit sample, rounded to the nearest quarter inch) are the same as the represented distance. Furthermore, DOE proposes that, if the represented distance is found to be valid, that distance would be used as the basis for determining the product class. If the represented distance is found to be invalid, the rounded measured distance would serve as the basis for determining the product class.

DOE proposes to consider the represented blade RPM at high speed valid if the measurement(s) (either the measured value for a single unit, or the mean of the measured values for a multiple unit sample, rounded to the nearest RPM) are within the greater of 1% or 1 RPM of the represented blade RPM at high speed. DOE is proposing these tolerances because they are consistent with the tolerances established in the July 2016 CF TP final rule to determine RPM measurements for large-diameter ceiling fans that can operate over an infinite number of speeds (see section 3.5(2) of Appendix U to subpart B of part 430). DOE proposes that, if the represented RPM is found to be valid, that RPM would be used as the basis for determining the product class. If the certified RPM is found to be invalid, the measured RPM would serve as the basis for determining the product class.

Represented values, including certified values, of blade edge thickness would be in accordance with the proposed represented value provisions in 10 CFR 429.32. The proposed rounding provisions for blade edge thickness (10 CFR part 429) would require that the thickness be rounded to the nearest tenth of an inch. This effectively would provide a tolerance range of approximately 0.1 inches. DOE proposes to consider the represented blade edge thickness valid if the measurement(s) (either the measured value for a single unit, or the mean of the measured values for a multiple unit sample, rounded to the nearest tenth of an inch) are the same as the represented blade edge thickness. DOE proposes that, if the represented blade edge thickness is found to be valid, that blade edge thickness would be used as the basis for determining the product class. If the represented blade edge thickness is found to be invalid, the rounded measured blade edge thickness would serve as the basis for determining the product class.

DOE seeks comment on the proposed method for verifying the blade span, the distance between the ceiling and lowest point of the fan blades, RPM at high speed, and the blade edge thickness.

H. Compliance Dates and Waivers

EPCA prescribes that all representations of energy efficiency and energy use, including those made on marketing materials and product labels, must be made in accordance with an amended test procedure, beginning 180 days after publication of such a test procedure final rule in the **Federal Register**. (42 U.S.C. 6293(c)(2)) If DOE were to publish an amended test procedure EPCA provides an allowance for individual manufacturers to petition DOE for an extension of the 180-day period if the manufacturer may experience undue hardship in meeting the deadline. (42 U.S.C. 6293(c)(3)) To receive such an extension, petitions must be filed with DOE no later than 60 days before the end of the 180-day period and must detail how the manufacturer will experience undue hardship. (Id.)

Upon the compliance date, *i.e.,* 180 days after publication of any final rule amending the test procedure, should DOE issue such an amendment, any waivers that had been previously issued and are in effect that pertain to issues addressed by the amended test procedure are terminated. 10 CFR 430.27(h)(2). Recipients of any such waivers would be required to test the products subject to the waiver according to the amended test procedure as of the effective date of the amended test procedure. As discussed in section III.C of this NOPR the amendments proposed in this document would address the issues that are the subject of the interim waiver DOE granted to BAS.

As discussed in section III.C of this NOPR, DOE does not expect any of these amendments to impact the measures of energy consumption or efficiency for the basic models that were tested in accordance with the July 2016 CF TP final rule. As discussed, DOE is proposing to specify that VSD ceiling fans that do not also meet the definition of LSSD fan are not required to be tested pursuant to the DOE test method for purposes of demonstrating compliance with DOE's energy conservation

standards for ceiling fans or representations of efficiency; increase the tolerances for the stability criteria at low speed; codify existing guidance regarding the calculation of certain values required for FTC labels; specify that fans with a blade span larger than 24 feet are not required to be tested pursuant to the DOE test procedure for purposes of determining compliance with the energy conservation standards established by DOE; revise the certification requirements to reflect the reporting necessary under the recently amended ceiling fan energy conservation standards; and specify measurement procedures for verifying certain represented ceiling fan characteristics.

I. Test Procedure Costs and Impact

EPCA requires that test procedures proposed by DOE not be unduly burdensome to conduct. In this NOPR, DOE proposes: (1) To interpret the term ''ceiling fan'' as defined by EPCA to mean those fans offered for mounting only on a ceiling. Any fan, including a ceiling-mount air circulating fan head, offered with other mounting options would not be a ceiling fan; (2) to specify that VSD ceiling fans that do not also meet the definition of LSSD fan are not required to be tested pursuant to the DOE test method for purposes of demonstrating compliance with DOE's energy conservation standards for ceiling fans or representations of efficiency; (3) to increase the tolerance for the stability criteria for the average air velocity measurements for LSSD and VSD ceiling fans; (4) to codify in regulation existing guidance on the method for calculating several values reported on the Federal Trade Commission (FTC) EnergyGuide label for LSSD and VSD ceiling fans using results from the ceiling fan test procedures in Appendix U to subpart B of 10 CFR part 430 and represented values in 10 CFR part 429; (5) to specify that large-diameter ceiling with blade spans greater than 24 feet do not need to be tested pursuant to the DOE test procedure for purposes of demonstrating compliance with DOE energy conservation standards or representations of energy efficiency are; and (6) to amend certification requirements and product-specific enforcement provisions for ceiling fans to reflect the most recent amendments to the test procedures and energy conservation standards for ceiling fans. DOE has tentatively determined that these proposed amendments to the ceiling fan test procedure would not be unduly burdensome for manufacturers to conduct and would reduce test burden for manufacturers.

DOE's analyses of this proposal indicate that, if finalized, it would result in a net cost savings to manufacturers.

TABLE III.1—SUMMARY OF COST IMPACTS FOR CEILING FANS

Category	Present value (million 2016$)	Discount rate (percent)
Cost Savings		
Reduction in Scope (testing costs)	0.30	3
	0.13	7
Reduction in Scope (conversion costs)	0.75	3
	0.64	7
Reduction in Future Testing Costs	0.14	3
	0.05	7
Reduction in Upfront Testing Costs (*i.e.,* Purchase of Testing Equipment)	0.81	3
	0.70	7
Total Net Cost Impacts		
Total Net Cost Impacts	(2.01)	3
	(1.52)	7

TABLE III.2—SUMMARY OF ANNUALIZED COST IMPACTS FOR CEILING FANS

Category	Annualized value (thousands 2016$)	Discount rate (percent)
Annualized Cost Savings		
Reduction in Scope (testing costs)	9	3
	9	7
Reduction in Scope (conversion costs)	22	3
	45	7
Reduction in Future Testing Costs	4	3
	4	7
Reduction in Upfront Testing Cost (*i.e.,* Purchase of Testing Equipment)	24	3
	49	7
Total Net Annualized Cost Impacts		
Total Net Cost Impacts	(60)	3
	(107)	7

Further discussion of the cost impacts of the proposed test procedure amendments are presented in the following paragraphs.

1. Cost Impacts for Scope

As discussed in section III.A of this NOPR, in advance of the compliance date of the energy conservation standards DOE is proposing to amend the regulatory text to interpret the term ''ceiling fan'' as defined by EPCA to mean those fans offered for mounting only on a ceiling. Any fan, including a ceiling-mount air circulating fan head, offered with other mounting options would not be a ceiling fan. Based on a review of the ceiling fan market, DOE has observed that fans with more than one mounting option tend to be fans with thin blades, high tip speeds, and a guard. Accordingly, DOE identified that the majority of the fans that would be properly classified as outside the definition of a ceiling fan based on the clarification of the statutory scope would be from the HSSD product class.

Based on a review of the ceiling fan market, DOE estimates there are approximately 219 models that ceiling fan manufacturers could potentially consider HSSD ceiling fans based on the ceiling fan definition in Appendix U. DOE estimated that approximately 10 percent of these models meet the proposed definition of an air circulating fan head that has more than one mounting option beyond a ceiling mount, and therefore would not be subject to DOE's test procedure and energy conservation standards for ceiling fans. Therefore, DOE estimates that approximately 22 models would not need to be tested nor potentially redesigned to meet the upcoming energy conservation standards.

DOE estimates that ceiling fan manufacturers incur approximately $1,525 to test HSSD ceiling fans.[16] Therefore, DOE estimates that ceiling fan manufacturers would have incurred cost of approximately $33,550 in 2020, the year energy conservation standards become effective and ceiling fan manufacturers are required to test and certify all covered ceiling fans. Additionally, DOE anticipates that ceiling fan manufacturers will introduce a new or modified model once every 3.5 years, therefore, on average ceiling fan manufacturers would introduce approximately 6 new or modified HSSD ceiling fan models each year. Based on these estimates, ceiling fan manufacturers would have incurred approximately $9,150 in testing costs each year after 2020. Due to the proposed scope clarification ceiling fan manufacturers would no longer incur these testing costs.

In addition to the cost savings from avoiding testing costs, ceiling fan manufacturers would not incur conversion costs associated with redesigning models that ceiling fan manufacturers could have potentially considered HSSD ceiling fans based on the existing ceiling fan definition, but are not considered ceiling fans based on the proposed clarification. As part of the January 2017 CF ECS final rule, DOE estimated the conversion costs of the adopted energy conservation standards for HSSD ceiling fans. 82 FR 6826 (January 19, 2017). DOE estimated that ceiling fan manufacturers would incur approximately $8.3 million in conversion costs to convert all non-compliant HSSD ceiling fans into compliant models by the 2020 compliance date.[17] As previously stated, DOE estimates that approximately 10 percent of basic models that manufacturers have certified as HSSD ceiling fans, but that meet the proposed definition of air circulating fan head, would not be subject to DOE's energy conservation standards for ceiling fans. Therefore, DOE estimates that ceiling fan manufacturers would have incurred approximately $831,000 in conversion costs to convert these products leading up to the 2020 energy conservation standards compliance date. Due to the proposed scope clarification ceiling fan, manufacturers would be certain that they no longer need to incur these conversion costs.

DOE requests comment on its assumptions and understanding of the estimated impact and associated cost savings to ceiling fan manufacturers regarding DOE's proposal to clarify the scope. Additionally, DOE requests comment on any potential cost not accounted for in the analysis that ceiling fan manufacturers may incur due to this proposed clarification.

2. Cost Impacts for Stability Criteria

As discussed in section III.C of this NOPR, DOE is proposing to increase the tolerance for the stability criteria for the average air velocity measurements of LSSD and VSD ceiling fans that meet the definition of LSSD fans at low speed, and to codify in regulation current guidance on calculating reported values on the FTC EnergyGuide label. Based on review of the DOE's Compliance Certification Database (CCD), DOE identified 22 unique manufacturers that make 3,339 unique basic models of LSSD fans and seven unique basic models of VSD fans.[18] basic models.

DOE expects its proposal to increase the tolerance for the average air velocity stability criteria for low speed tests would reduce the number of successive measurements needed for LSSD and VSD ceiling fans without materially changing the efficiency results (see section III.C of this NOPR for further details). The reduction in the number of successive measurements required to achieve stability would reduce the time to conduct the test, also reducing the per unit cost to test for LSSD and VSD fans. DOE estimates that the proposed amendments to the stability criteria may save approximately 20 minutes in testing time for each LSSD or VSD fan tested. DOE estimates the average wage rate plus employer provided benefits for an employee to conduct these tests is $36.40 per hour.[19] There are 688 LSSD fan models and seven VSD fan models affected by this stability criteria proposal.[20] DOE anticipates that manufacturers would introduce new or modified models once every 3.5 years, therefore, on average manufacturers would introduce approximately 199 new or modified LSSD and VSD fan models each year and would be required to test each fan model at least twice in accordance with this test procedure.

[16] This is based on the testing cost described in the July 2016 CF TP final rule (81 FR 48620, 48636). This cost is in 2015$.

[17] The conversion cost estimates presented in the January 2017 CF ECS final rule are broken out by product class in the published GRIM. The January 2017 CF ECS adopted EL 4 for HSSD ceiling fans. Capital conversion costs for HSSD ceiling fans at EL 4 were $5.5 million (2015$) and product conversion costs at EL 4 were $2.8 million (2015$).

[18] DOE identified 7,231 ceiling fan entries in DOE's CCD on February 26, 2019. Of those models, 3,473 are unique basic models. There are 35 fans that have a diameter less than or equal to 18 inches. Seven of which are VSD fans that meet the definition of LSSD fans and 28 which do not, and therefore are not subject to the DOE test procedure. Additionally, there are 3,434 fans that either have a diameter more than 18 inches and less than or equal to 84 inches, or do not have a diameter listed in CCD. DOE assumed all these fans were either LSSD or HSSD fans. Of these fans, 95 are HSSD fans and 3,339 are LSSD fans. Lastly, there are four fans that are large diameter fans with diameters greater than 84 inches.

[19] The Bureau of Labor Statistics mean hourly wage rate for a ''Mechanical Engineering Technician'' is $28.00. (May 2018; *https://www.bls.gov/oes/current/oes173027.htm*).)

Additionally, according to the Annual Survey of Manufacturers for NAICS code 335210, small electrical appliance manufacturing, wages represent approximately 77 percent of total cost of employment.

(AMS 2016, NAICS code 335210; *https://www.census.gov/programs-surveys/asm.html*).)

[20] Of the 3,339 LSSD fans DOE identified, there were 688 unique basic models with more than 3 speed control settings. DOE used this criteria to estimate the number of LSSD models that would be affect by this proposed stability criteria. Additionally, DOE assumed all seven VSD models would be affected as well.

Using these estimates, DOE anticipates cost savings of approximately $4,829 each year for all LSSD and VSD ceiling fans affected by the proposed stability criteria.[21]

In addition to the testing cost savings, manufacturers would likely experience cost savings from avoiding the need to purchase additional and more-costly air velocity sensors. Manufacturers are having trouble achieving stability in low speed using their current sensors. DOE is aware that upgrading air velocity sensors may be one way that manufacturers can meet the stability criteria required by the current test procedure. Upgraded sensors can cost between two and ten times as much as the standard sensors that manufacturers typically use for ceiling fan testing. To test ceiling fans up to 84 inches in diameter with an air velocity sensor every 4 inches and in all four axes could require a manufacturer to purchase, calibrate, and install as many as 45 upgraded sensors. DOE estimates that this investment would be approximately $50,000 per manufacturer for these upgraded sensors.

Of the 22 companies DOE identified that make LSSD or VSD ceiling fans for which these stability criteria apply and upgraded sensors may be needed, DOE assumed that only companies making multiple models for which these stability criteria apply to would purchase these upgraded sensors. The other manufacturers that only have a single ceiling fan model needing these upgraded sensors were assumed to contract third-party labs for testing. In these cases, the third-party labs will bear the cost of any necessary sensor upgrades. DOE estimates that 19 manufacturers would have invested in upgraded sensors to meet the stability criteria to comply with the current test procedure. Therefore, DOE estimates that the industry-wide one-time avoided cost due to this proposal would be approximately $950,000.

DOE requests comment on its assumptions and understanding of the estimated impact and associated cost savings to ceiling fan manufacturers regarding DOE's proposal to increase the tolerance for the stability criteria for the average air velocity measurements of LSSD and VSD ceiling fans that meet the definition of LSSD fans at low speed. Additionally, DOE requests comment on any potential cost manufacturers may incur, if any, due to this proposed amendment.

3. Potential Cost Impacts if the Low Speed Criteria Definition Is Modified

In addition to proposing to increase the tolerance for the stability criteria for the average air velocity measurements of LSSD and VSD ceiling fans, DOE might consider modifying the low speed criteria definition, which is required to test LSSD and VSD ceiling fans, as discussed in section III.C of this NOPR. Based on review of the DOE's CCD, DOE identified 22 unique manufacturers that make 3,339 unique basic models of LSSD fans and seven unique basic models of VSD fans.[22]

DOE anticipates that this potential modification in definition could reduce the total test time for a portion of LSSD and VSD ceiling fans when conducting the low speed tests. DOE anticipates that manufacturers of LSSD and VSD ceiling fans could save approximately 60 minutes in testing time for certain LSSD and VSD models if the low speed criteria definition is adopted. As stated in the previous section, DOE estimated there are 688 LSSD fan models and seven VSD fan models affected by the stability criteria proposal. DOE estimates that approximately 10 percent of these LSSD and VSD ceiling fans affected by the stability criterial proposal could also be affected by the potential low speed criteria definition modification. As previously stated, DOE anticipates that manufacturers would introduce new or modified models once every 3.5 years. Therefore, on average manufacturers would introduce approximately 20 new or modified LSSD and VSD fan models that could be affected each year by the potential low speed criteria definition modification and would be required to test each fan model at least twice in accordance with this test procedure.[23] Using these estimates, DOE anticipates potential cost savings of approximately $1,456 each year for all LSSD and VSD ceiling fans affected by the potential low speed criteria definition modification.[24]

DOE requests comment on its assumptions and understanding of the anticipated impact and potential cost savings to ceiling fan manufacturers if DOE modifies the low speed criteria definition. Additionally, DOE requests comment on any potential cost manufacturers may incur, if any, due to this definition is modified.

4. Cost Impacts for Other Test Procedure Amendments

This notice proposes to specify that fans with blade spans larger than 24 feet are not required to be tested pursuant to the DOE test procedure for purposes of determining compliance with the energy conservation standards established by DOE or making other representations of efficiency. As stated in section III.E of this NOPR, DOE has not identified any ceiling fans on the market with a blade span greater than 24 feet. As such DOE does not expect there to be a cost impact resulting from this proposed amendment.

Additionally, DOE believes that the other proposed amendments will provide manufacturers with greater certainty in the conduct of the test procedures. Regarding the proposed amendments to the certification provisions, manufacturers are already required to determine the values added under the proposal if making representations under the current test procedure for ceiling fans and will be required to use these values to ensure the products they distribute in commerce comply with the amended energy conservation standards. In addition, the proposed certification requirements will be necessary once compliance with the amended standards is required and should not increase burden. DOE does not estimate manufacturers would incur any additional costs or cost savings from these additional proposed test procedure amendments.

DOE requests comment on any potential cost or cost savings, that DOE did not account for, that ceiling fan manufacturers may incur due to these additional test procedure amendments.

J. Other Test Procedure Topics

In addition to the issues identified earlier in this document, DOE welcomes comment on any other aspect of the existing test procedure for ceiling fans

[21] This calculation includes a reduction of 20 minutes in testing time, applied to 199 models each year, 2 tests per model, and an hourly employment cost of $36.40 [(20/60) * 199 * 2 * $36.40 = $4,829].

[22] DOE identified 7,231 ceiling fan entries in DOE's CCD on February 26, 2019. Of those models, 3,473 are unique basic models. There are 35 fans that have a diameter less than or equal to 18 inches. Seven of which are VSD fans that meet the definition of LSSD fans and 28 which do not, and therefore are not subject to the DOE test procedure. Additionally, there are 3,434 fans that either have a diameter more than 18 inches and less than or equal to 84 inches, or do not have a diameter listed in CCD. DOE assumed all these fans were either LSSD or HSSD fans. Of these fans, 95 are HSSD fans and 3,339 are LSSD fans. Lastly, there are four fans that are large diameter fans with diameters greater than 84 inches.

[23] There are 688 LSSD ceiling fans and 7 VSD ceiling fans. Approximately 10 percent of those fans could be impacted by the potential low speed definition modification, so there are approximately 70 ceiling fans potentially impacted [(688 + 7) * 0.10 = 69.5]. The design cycle for ceiling fans is approximately 3.5 years for a model, so on average 20 new ceiling fan models would be introduced that could be affected by the potential low speed definition modification [69.5/3.5 = 19.9].

[24] This calculation includes a reduction of 60 minutes in testing time, applied to 20 models each year, 2 tests per model, and an hourly employment cost of $36.40 [(60/60) * 20 * 2 * $36.40 = $1,456].

not already addressed by the specific areas identified in this document. DOE particularly seeks information that would improve the representativeness of the test procedure, as well as information that would help DOE create a procedure that would limit manufacturer test burden. Comments regarding repeatability and reproducibility are also welcome. In particular, DOE notes that under Executive Order 13771, ''Reducing Regulation and Controlling Regulatory Costs,'' Executive Branch agencies such as DOE must manage the costs associated with the imposition of expenditures required to comply with Federal regulations. See 82 FR 9339 (Feb. 3, 2017). Consistent with that Executive Order, DOE encourages the public to provide input on measures DOE could take to lower the cost of its regulations applicable to ceiling fans consistent with the requirements of EPCA.

IV. Procedural Issues and Regulatory Review

A. Review Under Executive Order 12866

The Office of Management and Budget (OMB) has determined that test procedure rulemakings do not constitute ''significant regulatory actions'' under section 3(f) of Executive Order 12866, Regulatory Planning and Review, 58 FR 51735 (Oct. 4, 1993). Accordingly, this action was not subject to review under the Executive Order by the Office of Information and Regulatory Affairs (OIRA) in the Office of Management and Budget.

B. Review Under Executive Orders 13771 and 13777

On January 30, 2017, the President issued Executive Order (E.O.) 13771, ''Reducing Regulation and Controlling Regulatory Costs.'' E.O. 13771 stated the policy of the executive branch is to be prudent and financially responsible in the expenditure of funds, from both public and private sources. E.O. 13771 stated it is essential to manage the costs associated with the governmental imposition of private expenditures required to comply with Federal regulations.

Additionally, on February 24, 2017, the President issued E.O. 13777, ''Enforcing the Regulatory Reform Agenda.'' E.O. 13777 required the head of each agency designate an agency official as its Regulatory Reform Officer (RRO). Each RRO oversees the implementation of regulatory reform initiatives and policies to ensure that agencies effectively carry out regulatory reforms, consistent with applicable law. Further, E.O. 13777 requires the establishment of a regulatory task force at each agency. The regulatory task force is required to make recommendations to the agency head regarding the repeal, replacement, or modification of existing regulations, consistent with applicable law. At a minimum, each regulatory reform task force must attempt to identify regulations that:

(i) Eliminate jobs, or inhibit job creation;

(ii) Are outdated, unnecessary, or ineffective;

(iii) Impose costs that exceed benefits;

(iv) Create a serious inconsistency or otherwise interfere with regulatory reform initiatives and policies;

(v) Are inconsistent with the requirements of Information Quality Act, or the guidance issued pursuant to that Act, in particular those regulations that rely in whole or in part on data, information, or methods that are not publicly available or that are insufficiently transparent to meet the standard for reproducibility; or

(vi) Derive from or implement Executive Orders or other Presidential directives that have been subsequently rescinded or substantially modified.

DOE initially concludes that this rulemaking is consistent with the directives set forth in these executive orders. This proposed rule is estimated to result in cost savings. Assuming a 7 percent discount rate, the proposed rule would yield annualized cost savings of approximately $107,000 (2016$). Therefore, if finalized as proposed, this rule is expected to be an E.O. 13771 deregulatory action.

C. Review Under the Regulatory Flexibility Act

The Regulatory Flexibility Act (5 U.S.C. 601 *et seq.*) requires preparation of an initial regulatory flexibility analysis (IFRA) for any rule that by law must be proposed for public comment, unless the agency certifies that the rule, if promulgated, will not have a significant economic impact on a substantial number of small entities. As required by Executive Order 13272, ''Proper Consideration of Small Entities in Agency Rulemaking,'' 67 FR 53461 (August 16, 2002), DOE published procedures and policies on February 19, 2003, to ensure that the potential impacts of its rules on small entities are properly considered during the DOE rulemaking process. 68 FR 7990. DOE has made its procedures and policies available on the Office of the General Counsel's website: *http://energy.gov/gc/office-general-counsel.*

The July 2016 CF TP final rule assessed potential impacts on small businesses associated with ceiling fan test requirements. Specifically, DOE assessed the projected costs of testing, and provided description of steps taken to minimize impacts to small businesses. 81 FR 48620 (July 25, 2016) The January 2017 CF ECS final rule assessed potential impacts on small businesses associated with the ceiling fan energy conservation standards requirements. 82 FR 6826 (January 19, 2017) Specifically, DOE estimated total conversion costs for small ceiling fan manufacturers, and provided discussion on steps taken to minimize the impacts. DOE had identified six companies in the July 2016 CF TP final rule that are small businesses that maintain domestic production facilities, four of which manufacture HSSD ceiling fans, and three manufacture large-diameter ceiling fans.[25] DOE did not, however, identify any LSSD or VSD ceiling fan small businesses that maintain domestic production facilities.

This notice proposes amendments to the test procedures and certification requirements for ceiling fans. This rulemaking provides further specifications to existing requirements for testing and compliance with standards and does not materially change the burden associated with ceiling fan regulations on small entities regulated by the rulemaking. Specifically, DOE proposes to specify that VSD ceiling fans that do not also meet the definition of LSSD fan are not required to be tested pursuant to the DOE test method for purposes of demonstrating compliance with DOE's energy conservation standards for ceiling fans or representations of efficiency. This proposal, which would not require testing of any additional fans, would not result in a significant impact to a substantial number of small entities. In addition, as stated above, DOE did not identify any small LSSD or VSD ceiling fan manufacturers that maintain domestic production facilities.

DOE also proposes to increase the tolerance for stability criteria for the average air velocity measurements for LSSD and VSD ceiling fans at low speed to reduce test burden without significantly changing test procedure results. As discussed in section III.I, this proposal is expected to reduce the test procedure burdens associated with testing time and investments in testing equipment. In addition, DOE proposes to codify current guidance on calculating several values reported on the FTC EnergyGuide label for LSSD and VSD ceiling fans, which is expected

[25] One small business manufactures both HSSD ceiling fans and large-diameter ceiling fans.

to provide manufacturers additional certainty in reporting test measurements to DOE and to harmonize DOE and FTC reporting requirements. While as noted above, DOE did not identify any small LSSD or VSD ceiling fan manufacturers with domestic production facilities at this time, this proposal would lower the burden on any small business that determined to manufacture such fans domestically. In addition, DOE proposes to interpret the term ''ceiling fan'' as defined by EPCA to mean those fans offered for mounting only on a ceiling. Any fan, including a ceiling-mount air circulating fan head, offered with other mounting options would not be a ceiling fan.

DOE also proposes to specify that fans with a blade span larger than 24 feet are not required to be tested according to the DOE test procedure for large-diameter fans for purposes of determining compliance with DOE energy conservation standards or to make other representations of efficiency; this proposal is not expected to increase the testing costs for large diameter fans. As stated in section III.E of this NOPR, DOE has not identified any ceiling fans on the market with a blade span greater than 24 feet. As such DOE does not expect there to be a cost impact resulting from this proposed amendment. This cost would remain at approximately $4,000 per ceiling fan, and these costs would not accrue to any additional fans with diameters greater than 24 feet. In this proposal, DOE would also amend certification requirements and product-specific enforcement provisions for consistency with the current test procedure and recently amended energy conservation standards for ceiling fans; specifically, this proposal would specify the use of the methods currently in Appendix U for verifying certain ceiling fan characteristics. DOE does not expect this proposal to significantly impact manufacturers because they are already required to determine these values if making representations under the current test procedure for ceiling fans, and because the proposal clarifies how these values would be made when compliance with standards is required.

For these reasons, DOE certifies that this rulemaking will not have a significant economic impact on a substantial number of small entities. Accordingly, DOE did not prepare an IRFA for this rulemaking. DOE's certification and supporting statement of factual basis will be provided to the Chief Counsel for Advocacy of the Small Business Administration for review under 5 U.S.C. 605(b).

D. Review Under the Paperwork Reduction Act of 1995

Manufacturers of ceiling fans must certify to DOE that their products comply with any applicable energy conservation standards. To certify compliance, manufacturers must first obtain test data for their products according to the DOE test procedures, including any amendments adopted for those test procedures. DOE has established regulations for the certification and recordkeeping requirements for all covered consumer products and commercial equipment, including ceiling fans. (*See generally* 10 CFR part 429.) The collection-of-information requirement for the certification and recordkeeping is subject to review and approval by OMB under the Paperwork Reduction Act (PRA). This requirement has been approved by OMB under OMB control number 1910–1400. Public reporting burden for the certification is estimated to average 35 hours per response, including the time for reviewing instructions, searching existing data sources, gathering and maintaining the data needed, and completing and reviewing the collection of information.

Notwithstanding any other provision of the law, no person is required to respond to, nor shall any person be subject to a penalty for failure to comply with, a collection of information subject to the requirements of the PRA, unless that collection of information displays a currently valid OMB Control Number.

E. Review Under the National Environmental Policy Act of 1969

DOE is analyzing this proposed regulation in accordance with the National Environmental Policy Act (NEPA) and DOE's NEPA implementing regulations (10 CFR part 1021). DOE's regulations include a categorical exclusion for rulemakings interpreting or amending an existing rule or regulation that does not change the environmental effect of the rule or regulation being amended. 10 CFR part 1021, subpart D, appendix A5. DOE anticipates that this rulemaking qualifies for categorical exclusion A5 because it is an interpretive rulemaking that does not change the environmental effect of the rule and otherwise meets the requirements for application of a categorical exclusion. See 10 CFR 1021.410. DOE will complete its NEPA review before issuing the final rule.

F. Review Under Executive Order 13132

Executive Order 13132, ''Federalism,'' 64 FR 43255 (August 4, 1999) imposes certain requirements on agencies formulating and implementing policies or regulations that preempt State law or that have Federalism implications. The Executive Order requires agencies to examine the constitutional and statutory authority supporting any action that would limit the policymaking discretion of the States and to carefully assess the necessity for such actions. The Executive Order also requires agencies to have an accountable process to ensure meaningful and timely input by State and local officials in the development of regulatory policies that have Federalism implications. On March 14, 2000, DOE published a statement of policy describing the intergovernmental consultation process it will follow in the development of such regulations. 65 FR 13735. DOE has examined this proposed rule and has determined that it would not have a substantial direct effect on the States, on the relationship between the national government and the States, or on the distribution of power and responsibilities among the various levels of government. EPCA governs and prescribes Federal preemption of State regulations as to energy conservation for the products that are the subject of this proposed rule. States can petition DOE for exemption from such preemption to the extent, and based on criteria, set forth in EPCA. (42 U.S.C. 6297(d)) No further action is required by Executive Order 13132.

G. Review Under Executive Order 12988

Regarding the review of existing regulations and the promulgation of new regulations, section 3(a) of Executive Order 12988, ''Civil Justice Reform,'' 61 FR 4729 (Feb. 7, 1996), imposes on Federal agencies the general duty to adhere to the following requirements: (1) Eliminate drafting errors and ambiguity, (2) write regulations to minimize litigation, (3) provide a clear legal standard for affected conduct rather than a general standard, and (4) promote simplification and burden reduction. Section 3(b) of Executive Order 12988 specifically requires that Executive agencies make every reasonable effort to ensure that the regulation (1) clearly specifies the preemptive effect, if any, (2) clearly specifies any effect on existing Federal law or regulation, (3) provides a clear legal standard for affected conduct while promoting simplification and burden reduction, (4) specifies the retroactive effect, if any, (5) adequately defines key terms, and (6) addresses other important issues affecting clarity and general draftsmanship under any guidelines issued by the Attorney General. Section 3(c) of Executive Order

12988 requires Executive agencies to review regulations in light of applicable standards in sections 3(a) and 3(b) to determine whether they are met or it is unreasonable to meet one or more of them. DOE has completed the required review and determined that, to the extent permitted by law, the proposed rule meets the relevant standards of Executive Order 12988.

H. Review Under the Unfunded Mandates Reform Act of 1995

Title II of the Unfunded Mandates Reform Act of 1995 (UMRA) requires each Federal agency to assess the effects of Federal regulatory actions on State, local, and Tribal governments and the private sector. Public Law 104–4, sec. 201 (codified at 2 U.S.C. 1531). For a proposed regulatory action likely to result in a rule that may cause the expenditure by State, local, and Tribal governments, in the aggregate, or by the private sector of $100 million or more in any one year (adjusted annually for inflation), section 202 of UMRA requires a Federal agency to publish a written statement that estimates the resulting costs, benefits, and other effects on the national economy. (2 U.S.C. 1532(a), (b)) The UMRA also requires a Federal agency to develop an effective process to permit timely input by elected officers of State, local, and Tribal governments on a proposed ''significant intergovernmental mandate,'' and requires an agency plan for giving notice and opportunity for timely input to potentially affected small governments before establishing any requirements that might significantly or uniquely affect small governments. On March 18, 1997, DOE published a statement of policy on its process for intergovernmental consultation under UMRA. 62 FR 12820; also, available at *http://energy.gov/gc/office-general-counsel.* DOE examined this proposed rule according to UMRA and its statement of policy and determined that the rule contains neither an intergovernmental mandate, nor a mandate that may result in the expenditure of $100 million or more in any year, so these requirements do not apply.

I. Review Under the Treasury and General Government Appropriations Act, 1999

Section 654 of the Treasury and General Government Appropriations Act, 1999 (Pub. L. 105–277) requires Federal agencies to issue a Family Policymaking Assessment for any rule that may affect family well-being. This proposed rule would not have any impact on the autonomy or integrity of the family as an institution. Accordingly, DOE has concluded that it is not necessary to prepare a Family Policymaking Assessment.

J. Review Under Executive Order 12630

DOE has determined, under Executive Order 12630, ''Governmental Actions and Interference with Constitutionally Protected Property Rights'' 53 FR 8859 (March 18, 1988) that this regulation would not result in any takings that might require compensation under the Fifth Amendment to the U.S. Constitution.

K. Review Under Treasury and General Government Appropriations Act, 2001

Section 515 of the Treasury and General Government Appropriations Act, 2001 (44 U.S.C. 3516 note) provides for agencies to review most disseminations of information to the public under guidelines established by each agency pursuant to general guidelines issued by OMB. OMB's guidelines were published at 67 FR 8452 (Feb. 22, 2002), and DOE's guidelines were published at 67 FR 62446 (Oct. 7, 2002). DOE has reviewed this proposed rule under the OMB and DOE guidelines and has concluded that it is consistent with applicable policies in those guidelines.

L. Review Under Executive Order 13211

Executive Order 13211, ''Actions Concerning Regulations That Significantly Affect Energy Supply, Distribution, or Use,'' 66 FR 28355 (May 22, 2001), requires Federal agencies to prepare and submit to OMB, a Statement of Energy Effects for any proposed significant energy action. A ''significant energy action'' is defined as any action by an agency that promulgated or is expected to lead to promulgation of a final rule, and that (1) is a significant regulatory action under Executive Order 12866, or any successor order; and (2) is likely to have a significant adverse effect on the supply, distribution, or use of energy; or (3) is designated by the Administrator of OIRA as a significant energy action. For any proposed significant energy action, the agency must give a detailed statement of any adverse effects on energy supply, distribution, or use should the proposal be implemented, and of reasonable alternatives to the action and their expected benefits on energy supply, distribution, and use.

The proposed regulatory action to amend the test procedure for measuring the energy efficiency of ceiling fans is not a significant regulatory action under Executive Order 12866. Moreover, it would not have a significant adverse effect on the supply, distribution, or use of energy, nor has it been designated as a significant energy action by the Administrator of OIRA. Therefore, it is not a significant energy action, and, accordingly, DOE has not prepared a Statement of Energy Effects.

M. Review Under Section 32 of the Federal Energy Administration Act of 1974

Under section 301 of the Department of Energy Organization Act (Pub. L. 95–91; 42 U.S.C. 7101), DOE must comply with section 32 of the Federal Energy Administration Act of 1974, as amended by the Federal Energy Administration Authorization Act of 1977. (15 U.S.C. 788; FEAA) Section 32 essentially provides in relevant part that, where a proposed rule authorizes or requires use of commercial standards, the notice of proposed rulemaking must inform the public of the use and background of such standards. In addition, section 32(c) requires DOE to consult with the Attorney General and the Chairman of the Federal Trade Commission (FTC) concerning the impact of the commercial or industry standards on competition.

The proposed modifications to the test procedure for ceiling fans adopted in this final rule do not incorporate any new standards that would require consultation under section 32(b) of the FEAA.

N. Description of Materials Incorporated by Reference

In this NOPR, DOE proposes to incorporate by reference the test standard published by ANSI/AMCA Standard 230–15 (''AMCA 230–15''), titled ''Laboratory Methods of Testing Air Circulating Fans for Rating and Certification.'' Specifically, the test procedure proposed by this NOPR references a definition provided in AMCA 230–15. AMCA 230–15 is an industry-standard test procedure for measuring the airflow efficiency of commercial and industrial ceiling fans. AMCA 230–15 is available from Air Movement and Control Association International, Inc. (AMCA), 30 West University Drive, Arlington Heights, IL 60004, (847) 394–0150, or by going to *http://www.amca.org/store/item.aspx?ItemId=81.*

V. Public Participation

A. Submission of Comments

DOE invites all interested partied to submit in writing by November 29, 2019 comments and information regarding this proposed rule.

Submitting comments via *http://www.regulations.gov.* The *http://*

www.regulations.gov web page will require you to provide your name and contact information prior to submitting comments. Your contact information will be viewable to DOE Building Technologies staff only. Your contact information will not be publicly viewable except for your first and last names, organization name (if any), and submitter representative name (if any). If your comment is not processed properly because of technical difficulties, DOE will use this information to contact you. If DOE cannot read your comment due to technical difficulties and cannot contact you for clarification, DOE may not be able to consider your comment.

However, your contact information will be publicly viewable if you include it in the comment or in any documents attached to your comment. Any information that you do not want to be publicly viewable should not be included in your comment, nor in any document attached to your comment. Persons viewing comments will see only first and last names, organization names, correspondence containing comments, and any documents submitted with the comments.

Do not submit to *http://www.regulations.gov* information for which disclosure is restricted by statute, such as trade secrets and commercial or financial information (hereinafter referred to as Confidential Business Information (CBI)). Comments submitted through *http://www.regulations.gov* cannot be claimed as CBI. Comments received through the website will waive any CBI claims for the information submitted. For information on submitting CBI, see the Confidential Business Information section.

DOE processes submissions made through *http://www.regulations.gov* before posting. Normally, comments will be posted within a few days of being submitted. However, if large volumes of comments are being processed simultaneously, your comment may not be viewable for up to several weeks. Please keep the comment tracking number that *http://www.regulations.gov* provides after you have successfully uploaded your comment.

Submitting comments via email, hand delivery, or mail. Comments and documents submitted via email, hand delivery, or mail also will be posted to *http://www.regulations.gov.* If you do not want your personal contact information to be publicly viewable, do not include it in your comment or any accompanying documents. Instead, provide your contact information on a cover letter. Include your first and last names, email address, telephone number, and optional mailing address. The cover letter will not be publicly viewable as long as it does not include any comments.

Include contact information in your cover letter each time you submit comments, data, documents, and other information to DOE. If you submit via mail or hand delivery, please provide all items on a CD, if feasible. It is not necessary to submit printed copies. No facsimiles (faxes) will be accepted.

Comments, data, and other information submitted to DOE electronically should be provided in PDF (preferred), Microsoft Word or Excel, WordPerfect, or text (ASCII) file format. Provide documents that are not secured, written in English and free of any defects or viruses. Documents should not contain special characters or any form of encryption and, if possible, they should carry the electronic signature of the author.

Campaign form letters. Please submit campaign form letters by the originating organization in batches of between 50 to 500 form letters per PDF or as one form letter with a list of supporters' names compiled into one or more PDFs. This reduces comment processing and posting time.

Confidential Business Information. According to 10 CFR 1004.11, any person submitting information that he or she believes to be confidential and exempt by law from public disclosure should submit via email, postal mail, or hand delivery two well-marked copies: one copy of the document marked confidential including all the information believed to be confidential, and one copy of the document marked non-confidential with the information believed to be confidential deleted. Submit these documents via email or on a CD, if feasible. DOE will make its own determination about the confidential status of the information and treat it according to its determination.

Factors of interest to DOE when evaluating requests to treat submitted information as confidential include (1) a description of the items, (2) whether and why such items are customarily treated as confidential within the industry, (3) whether the information is generally known by or available from other sources, (4) whether the information has previously been made available to others without obligation concerning its confidentiality, (5) an explanation of the competitive injury to the submitting person which would result from public disclosure, (6) when such information might lose its confidential character due to the passage of time, and (7) why disclosure of the information would be contrary to the public interest.

It is DOE's policy that all comments may be included in the public docket, without change and as received, including any personal information provided in the comments (except information deemed to be exempt from public disclosure).

DOE considers public participation to be a very important part of the process for developing test procedures and energy conservation standards. DOE actively encourages the participation and interaction of the public during the comment period in each stage of the rulemaking process. Interactions with and between members of the public provide a balanced discussion of the issues and assist DOE in the rulemaking process. Anyone who wishes to be added to the DOE mailing list to receive future notices and information about this rulemaking should contact Appliance and Equipment Standards Program staff at (202) 287–1445 or via email at *ApplianceStandardsQuestions@ee.doe.gov.*

B. Issues on Which DOE Seeks Comment

Although comments are welcome on all aspects of this proposed rulemaking, DOE is particularly interested in comments on the proposal to interpret the term ''ceiling fan'' as defined by EPCA to mean those fans offered for mounting only on a ceiling. Any fan, including a ceiling-mount air circulating fan head, offered with other mounting options would not be a ceiling fan. DOE also seeks comment on the alternative interpretation of the term ''ceiling fan'' to mean that any fan, including those meeting the definition of an ''air circulating fan head'' in AMCA 230–2015, that does not have a ceiling mount option, or that has more than one mounting option (even if one of the mounting options is a ceiling mount), is not a ceiling fan. Such fans do not meet the statutory criteria of being ''nonportable'', ''suspended from the ceiling'', and ''for the purpose of circulating air.'' DOE also requests comment and supporting data on what tip speed/outlet air speed is appropriate as another means to differentiate ceiling fans from air circulating fan heads that are not ceiling fans. DOE also seeks comment on the extent to which the design criteria in EPCA do or do not apply to air circulating fan heads, as a factual matter. DOE also seeks comment on whether it is necessary to retain the exception for ceiling fans where the plane of rotation of the ceiling fan's blades is greater than 45 degrees from

horizontal, and for which the plane of rotation cannot be adjusted based on the manufacturer's specifications to be less than or equal to 45 degrees from horizontal; proposed clarification to the ceiling fan test procedure to not require testing for VSD ceiling fans that do not also meet the definition of LSSD fan; the proposed alternate stability criteria for average air velocity measurements; the potential modification of the low speed definition; the proposed calculation methods for values reported on the EnergyGuide label; the proposal to not require testing for large-diameter ceiling fans with blade spans greater than 24 feet and the availability of sufficient testing facilities for large-diameter fans, including those larger than 24 feet in diameter; the proposed certification requirements and product-specific enforcement provisions; and its understanding of the impact and associated cost savings (or potential costs) of these proposed amendments.

VI. Approval of the Office of the Secretary

The Secretary of Energy has approved publication of this proposed rule.

List of Subjects

10 CFR Part 429

Confidential business information, Energy conservation, Household appliances, Imports, Reporting and recordkeeping requirements.

10 CFR Part 430

Administrative practice and procedure, Confidential business information, Energy conservation, Household appliances, Imports, Incorporation by reference, Intergovernmental relations, Small businesses.

Signed in Washington, DC, on September 9, 2019.

Alexander N. Fitzsimmons,

Acting Deputy Assistant Secretary for Energy Efficiency, Energy Efficiency and Renewable Energy.

For the reasons stated in the preamble, DOE proposes to amend parts 429 and 430 of Chapter II of Title 10, Code of Federal Regulations as set forth below:

PART 429—CERTIFICATION, COMPLIANCE, AND ENFORCEMENT FOR CONSUMER PRODUCTS AND COMMERCIAL AND INDUSTRIAL EQUIPMENT

■ 1. The authority citation for part 429 continues to read as follows:

Authority: 42 U.S.C. 6291–6317; 28 U.S.C. 2461 note.

■ 2. Section 429.32 is amended by:
■ a. Revising the paragraph (a)(2) introductory text and paragraph (a)(2)(ii)(B);
■ b. Adding paragraphs (a)(3) and (4);
■ c. Revising paragraph (b);
■ d. Adding paragraph (c).

The revisions and additions read as follows:

§ 429.32 Ceiling fans.

(a) * * *

(2) For each basic model of ceiling fan, a sample of sufficient size must be randomly selected and tested to ensure that—

* * * * *

(ii) * * *

(B) The upper 95 percent confidence limit (UCL) of the true mean divided by 1.1, where:

$$UCL = \overline{x} + t_{0.95}\left(\frac{s}{\sqrt{n}}\right)$$

And $\bar{x}$ is the sample mean; s is the sample standard deviation; n is the number of samples; and $t_{0.95}$ is the t statistic for a 95% one-tailed confidence interval with n-1 degrees of freedom (from appendix A to this subpart); and

(3) For each basic model of ceiling fan,

(i) Any represented value of blade span, as defined in section 1.7 of appendix U to subpart B of part 430, is the mean of the blade spans measured for the sample selected as described in paragraph (a)(1) of this section, rounded to the nearest inch; and

(ii) Any represented value of blade revolutions per minute (RPM) is the mean of the blade RPM measurements measured for the sample selected as described in paragraph (a)(1) of this section, rounded to the nearest RPM; and

(iii) Any represented value of blade edge thickness is the mean of the blade edge thicknesses measured for the sample selected as described in paragraph (a)(1) of this section, rounded to the nearest tenth of an inch; and

(iv) Any represented value of the distance between the ceiling and the lowest point on the fan blades is the mean of the distances measured for the sample selected as described in paragraph (a)(1) of this section, rounded to the nearest quarter of an inch; and

(v) Any represented value of tip speed is pi multiplied by represented value of blade span divided by twelve multiplied by the represented value of RPM, rounded to the nearest foot per minute; and

(4) To determine values required by the Federal Trade Commission (FTC), use the following provisions. Note that, for multi-mount ceiling fans these values must be reported on the EnergyGuide label for the ceiling fan configuration with the lowest efficiency.

(i) FTC Airflow. Determine the represented value for FTC airflow by calculating the weighted-average airflow of an LSSD or VSD ceiling fan basic model at low and high fan speed as follows:

$$Airflow_{FTC} = \frac{CFM_{Low} \times 3.0 + CFM_{High} \times 3.4}{6.4}$$

Where:

$Airflow_{FTC}$ = represented value for FTC airflow, rounded to the nearest CFM,

CFM_{Low} = represented value of measured airflow, in cubic feet per minute, at low fan speed, pursuant to paragraph (a)(2)(i) of this section, and

CFM_{High} = represented value of measured airflow, in cubic feet per minute, at high fan speed, pursuant to paragraph (a)(2)(i) of this section.

(ii) FTC Energy Use. Determine represented value for FTC energy use by calculating the weighted-average power consumption of an LSSD or VSD ceiling fan basic model at low and high fan speed as follows:

$$Energy\ Use_{FTC} = \frac{W_{Low} \times 3.0 + W_{High} \times 3.4 + W_{Sb} \times 17.6}{6.4}$$

Where:

$Energy\ Use_{FTC}$ = represented value for FTC Energy Use, rounded to the nearest watt,

W_{Low} = represented value of measured power consumption, in watts, at low fan speed, pursuant to paragraph (a)(2)(ii) of this section,

W_{High} = represented value of measured power consumption, in watts, at high fan speed, pursuant to paragraph (a)(2)(ii) of this section, and

W_{Sb} = represented value of measured power consumption, in watts, in standby mode, pursuant to paragraph (a)(2)(ii) of this section.

(iii) FTC Estimated Yearly Energy Cost. Determine the represented value for FTC estimated yearly energy cost of an LSSD or VSD ceiling fan basic model at low and high fan speed as follows:

$$EYEC_{FTC} = \frac{W_{Low} \times 3.0 + W_{High} \times 3.4 + W_{Sb} \times 17.6}{1000} \times 365 \times 0.12$$

Where:

$EYEC_{FTC}$ = represented value for FTC estimated yearly energy cost, rounded to the nearest dollar, and

W_{Low} = represented value of measured power consumption, in watts, at low fan speed, pursuant to paragraph (a)(2)(ii) of this section,

W_{High} = represented value of measured power consumption, in watts, at high fan speed, pursuant to paragraph (a)(2)(ii) of this section, and

W_{Sb} = represented value of measured power consumption, in watts, in standby mode, pursuant to paragraph (a)(2)(ii) of this section.

(b) *Certification reports.* (1) The requirements of § 429.12 are applicable to ceiling fans; and

(2) Pursuant to § 429.12(b)(13), a certification report shall include the following public product-specific information:

(i) For all ceiling fans: Blade span (in), ceiling fan efficiency (CFM/W) (in both hugger and standard configurations for multi-mount fans), the number of speeds within the ceiling fan controls, and a declaration that the manufacturer has incorporated the applicable design requirements.

(ii) For small-diameter ceiling fans: A declaration whether the ceiling fan is a multi-head ceiling fan.

(iii) For low-speed small-diameter ceiling fans: A declaration whether the ceiling fan is a multi-mount ceiling fan.

(3) Pursuant to § 429.12(b)(13), a certification report shall include the following additional product-specific information for small-diameter ceiling fans: Blade edge thickness (in), airflow (CFM) at high speed, blade RPM at high speed, and the distance (in) between the ceiling and the lowest point on the fan blades (in both hugger and standard configurations for multi-mount fans).

(c) *Rounding Requirements.* Any represented value of ceiling fan efficiency, as described in paragraph (a)(2)(i) of this section must be expressed in cubic feet per minute per watt (CFM/W) and rounded to the nearest whole number.

■ 3. Section 429.134 is amended by adding paragraph (s) to read as follows:

§ 429.134 Product-specific enforcement provisions.

* * * * *

(s) *Ceiling Fans*—(1) *Verification of blade span.* DOE will measure the blade span and round the measurement pursuant to the test requirements of 10 CFR part 430 of this chapter for each unit tested. DOE will consider the represented blade span valid only if the rounded measurement(s) (either the rounded measured value for a single unit, or the mean of the rounded measured values for a multiple unit sample, rounded to the nearest inch) is the same as the represented blade span.

(i) If DOE determines that the represented blade span is valid, that blade span will be used as the basis for determining the product class and calculating the minimum allowable ceiling fan efficiency.

(ii) If DOE determines that the represented blade span is invalid, DOE will use the rounded measured blade span(s) as the basis for determining the product class, and calculating the minimum allowable ceiling fan efficiency.

(2) *Verification of the distance between the ceiling and lowest point of fan blades.* DOE will measure the distance between the ceiling and lowest point of the fan blades and round the measurement pursuant to the test requirements of 10 CFR part 430 of this chapter for each unit tested. DOE will consider the represented distance valid only if the rounded measurement(s) (either the measured value for a single unit, or the mean of the measured values for a multiple unit sample, rounded to the nearest quarter inch) are the same as the represented distance.

(i) If DOE determines that the represented distance is valid, that distance will be used as the basis for determining the product class.

(ii) If DOE determines that the represented distance is invalid, DOE will use the rounded measured distance(s) as the basis for determining the product class.

(3) *Verification of blade revolutions per minute (RPM) measured at high speed.* DOE will measure the blade RPM at high speed pursuant to the test requirements of 10 CFR part 430 of this chapter for each unit tested. DOE will consider the represented blade RPM measured at high speed valid only if the measurement(s) (either the measured value for a single unit, or the mean of the measured values for a multiple unit sample, rounded to the nearest RPM) are within the greater of 1% or 1 RPM of the represented blade RPM at high speed.

(i) If DOE determines that the represented RPM is valid, that RPM will be used as the basis for determining the product class.

(ii) If DOE determines that the represented RPM is invalid, DOE will use the rounded measured RPM(s) as the basis for determining the product class.

(4) *Verification of blade edge thickness.* DOE will measure the blade edge thickness and round the measurement pursuant to the test requirements of 10 CFR part 430 for each unit tested. DOE will consider the represented blade edge thickness valid only if the measurement(s) (either the measured value for a single unit, or the mean of the measured values for a multiple unit sample, rounded to the nearest tenth of an inch) are the same as the represented blade edge thickness.

(i) If DOE determines that the represented blade edge thickness is valid, that blade edge thickness will be used for determining product class.

(ii) If DOE determines that the represented blade edge thickness is invalid, DOE will use the rounded measured blade edge thickness(es) as the basis for determining the product class.

PART 430—ENERGY CONSERVATION PROGRAM FOR CONSUMER PRODUCTS

■ 4. The authority citation for part 430 continues to read as follows:

Authority: 42 U.S.C.6291–6309; 28 U.S.C. 2461 note.

■ 5. Section 430.2 is amended by revising the definition of ''Ceiling fan'' to read as follows:

§ 430.2 Definitions.

* * * * *

Ceiling fan means a nonportable device that is suspended from a ceiling for circulating air via the rotation of fan blades. For purposes of this definition, the term ''suspended from a ceiling'' means offered for mounting on a ceiling, and the term ''nonportable'' means not offered for mounting on a surface other than a ceiling. For all other ceiling fan-related definitions, see appendix U to this subpart.

[Alternatively, *Ceiling fan* means a nonportable device that is suspended from a ceiling for circulating air via the rotation of fan blades. DOE interprets this term to mean that any fan, including those meeting the definition of an ''air circulating fan head'' in AMCA 230–15 (incorporated by reference; see § 430.3), that does not have a ceiling mount option, or that has more than one mounting option (even if one of the mounting options is a ceiling mount), is not a ceiling fan. Such fans do not meet the statutory criteria of being ''nonportable'', ''suspended from the ceiling'', and ''for the purpose of circulating air.'' For all other ceiling fan-related definitions, see appendix U to this subpart.]

* * * * *

■ 6. Section 430.3 is amended by adding paragraph (b)(4) to read as follows:

§ 430.3 Materials incorporated by reference.

* * * * *

(b) * * *

(4) ANSI/AMCA Standard 230–15 (''AMCA 230–15''), ''Laboratory Methods of Testing Air Circulating Fans for Rating and Certification,'' ANSI approved October 16, 2015, IBR approved for § 430.2 to this subpart.

* * * * *

■ 7. Section 430.23 is amended by revising paragraph (w) to read as follows:

§ 430.23 Test procedures for the measurement of energy and water consumption.

* * * * *

(w) *Ceiling fans.* Measure the following attributes of a single ceiling fan in accordance with appendix U to this subpart: Airflow; power consumption; ceiling fan efficiency; distance between the ceiling and lowest point of fan blades; blade span; blade edge thickness; and blade revolutions per minute (RPM).

* * * * *

■ 8. Appendix U to subpart B of part 430 is amended by:

■ a. Revising sections 1.7, 1.11, 1.12, 1.13, 1.14, 1.16, 1.20, 1.21, and 1.23;

■ b. Revising section 3, 3.2, 3.2.2(1), 3.2.2(4), 3.2.2(6), 3.2.3, 3.3, 3.3.1(4), 3.3.2(1), 3.3.2(1) Step 1, 3.3.2(1) Step 7, 3.4.1, 3.6(1)(i) and (ii) and 4.

The revisions and additions read as follows:

Appendix U to Subpart B of Part 430—Uniform Test Method for Measuring the Energy Consumption of Ceiling Fans

* * * * *

1.7. *Blade span* means the diameter of the largest circle swept by any part of the fan blade assembly, including attachments. The represented value of blade span (D) is as determined in 10 CFR 429.32.

* * * * *

1.11. *High-speed small-diameter (HSSD) ceiling fan* means a small-diameter ceiling fan that is not a very-small-diameter ceiling fan, highly-decorative ceiling fan or belt-driven ceiling fan and that has a represented value of blade edge thickness, as determined in 10 CFR 429.32(a)(2)(v), of less than 3.2 mm or a maximum represented value of tip speed, as determined in 10 CFR 429.32(a)(2)(vii), greater than the applicable limit specified in the table in this definition.

HIGH-SPEED SMALL-DIAMETER CEILING FAN BLADE AND TIP SPEED CRITERIA

Airflow direction	Thickness (t) of edges of blades		Tip speed threshold	
	Mm	Inch	m/s	feet per minute
Downward-only	4.8 > t ≥ 3.2	3/16 > t ≥ 1/8	16.3	3,200
Downward-only	t ≥ 4.8	t ≥ 3/16	20.3	4,000
Reversible	4.8 > t ≥ 3.2	3/16 > t ≥ 1/8	12.2	2,400
Reversible	t ≥ 4.8	t ≥ 3/16	16.3	3,200

1.12. *Highly-decorative ceiling fan* means a ceiling fan with a maximum represented value of blade revolutions per minute (RPM), as determined in 10 CFR 429.32(a)(2)(iv), of 90 RPM, and a represented value of airflow at high speed, as determined in 10 CFR 429.32(a)(2)(i), of less than 1,840 CFM.

1.13. *Hugger ceiling fan* means a low-speed small-diameter ceiling fan that is not a very-small-diameter ceiling fan, highly-decorative ceiling fan, or belt-driven ceiling fan, and for which the represented value of the distance between the ceiling and the lowest point on the fan blades, as determined in 10 CFR 429.32(a)(2)(vi), is less than or equal to 10 inches.

1.14. *Large-diameter ceiling fan* means a ceiling fan that is not a highly-decorative ceiling fan or belt-driven ceiling fan and has a represented value of blade span, as determined in 10 CFR 429.32(a)(2)(iii), greater than seven feet and not greater than 24 feet.

* * * * *

1.16. *Low-speed small-diameter (LSSD) ceiling fan* means a small-diameter ceiling fan that has a represented value of blade edge thickness, as determined in 10 CFR 429.32(a)(2)(v), greater than or equal to 3.2 mm and a maximum represented value of tip speed, as determined in 10 CFR 429.32(a)(2)(vii), less than or equal to the applicable limit specified in the table in this definition.

LOW-SPEED SMALL-DIAMETER CEILING FAN BLADE AND TIP SPEED CRITERIA

Airflow direction	Thickness (t) of edges of blades		Tip speed threshold	
	Mm	Inch	m/s	feet per minute
Reversible	4.8 > t ≥ 3.2	3/16 > t ≥ 1/8	12.2	2,400
Reversible	t ≥ 4.8	t ≥ 3/16	16.3	3,200

* * * * *

1.20. *Small-diameter ceiling fan* means a ceiling fan that has a represented value of blade span, as determined in 10 CFR 429.32(a)(2)(iii), less than or equal to seven feet.

1.21. *Standard ceiling fan* means a low-speed small-diameter ceiling fan that is not a very-small-diameter ceiling fan, highly-decorative ceiling fan or belt-driven ceiling fan, and for which the represented value of the distance between the ceiling and the lowest point on the fan blades, as determined in 10 CFR 429.32(a)(2)(vi), is greater than 10 inches.

* * * * *

1.23. *Very-small-diameter (VSD) ceiling fan* means a small-diameter ceiling fan that is not a highly-decorative ceiling fan or belt-driven ceiling fan; and has one or more fan heads, each of which has a represented value of blade span, as determined in 10 CFR 429.32(a)(2)(iii), of 18 inches or less. Only VSD fans that also meet the definition of an LSSD fan are required to be tested for purposes of determining compliance with energy efficiency standards established by DOE and for other representations of energy efficiency.

* * * * *

3. *General Instructions, Test Apparatus, and Test Measurement:*

The test apparatus and test measurement used to determine energy performance depend on the ceiling fan's blade span, and in some cases the ceiling fan's blade edge thickness. For each tested ceiling fan, measure the lateral distance from the center of the axis of rotation of the fan blades to the furthest fan blade edge from the center of the axis of rotation. Measure this lateral distance at the resolution of the measurement instrument, using an instrument with a measurement resolution of least 0.25 inches. Multiply the lateral distance by two and then round to the nearest whole inch to determine the blade span. For ceiling fans having a blade span greater than 18 inches and less than or equal to 84 inches, measure the ceiling fan's blade edge thickness. To measure the fan blade edge thickness, use an instrument with a measurement resolution of at least one tenth of an inch and measure the thickness of one fan blade's leading edge (in the forward direction) direction) according to the following:

(1) At the point at which the blade is thinnest along the radial length of the fan blade and is greater than or equal to one inch from the tip of the fan blade, and

(2) One inch from the leading edge of the fan blade. See Figure 1 of this appendix for an instructional schematic on making the fan blade edge thickness measurement. Figure 1 depicts a ceiling fan from above. Round the measured blade edge thickness to the nearest tenth of an inch.

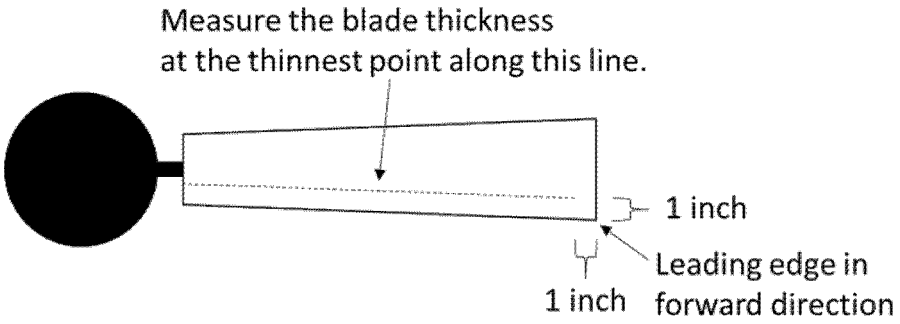

Figure 1 to Appendix U to Subpart B of Part 430: Measurement Criteria for Fan Blade Edge Thickness

* * * * *

3.2 Test apparatus for low-speed small-diameter, very-small-diameter, and high-speed small-diameter ceiling fans: All instruments are to have accuracies within ±1% of reading, except for the air velocity sensors, which must have accuracies within ±5% of reading or 2 feet per minute (fpm), whichever is greater. Equipment is to be calibrated at least once a year to compensate for variation over time.

* * * * *

3.2.2. Equipment Set-Up

(1) Make sure the transformer power is off. Hang the ceiling fan to be tested directly from the ceiling, according to the manufacturer's installation instructions. Hang all non-multi-mount ceiling fans in the fan configuration that minimizes the distance between the ceiling and the lowest point of the fan blades. Hang and test multi-mount fans in two configurations: The configuration associated the definition of a standard fan that minimizes the distance between the ceiling and the lowest point of the fan blades and the configuration associated with the definition of a hugger fan that minimizes the distance between the ceiling and the lowest point of the fan blades. For all tested configurations, measure the distance between the ceiling and the lowest point of the fan blade using an instrument with a measurement resolution of at least 0.25 inches. Round the measured distance from the ceiling to the lowest point of the fan blade to the nearest quarter inch.

* * * * *

(4) Either a rotating sensor arm or four fixed sensor arms can be used to take air velocity measurements along four axes, labeled A–D. Axes A, B, C, and D are at 0, 90, 180, and 270 degree positions. Axes A–D must be perpendicular to the four walls of the room. See Figure 2 of this appendix.

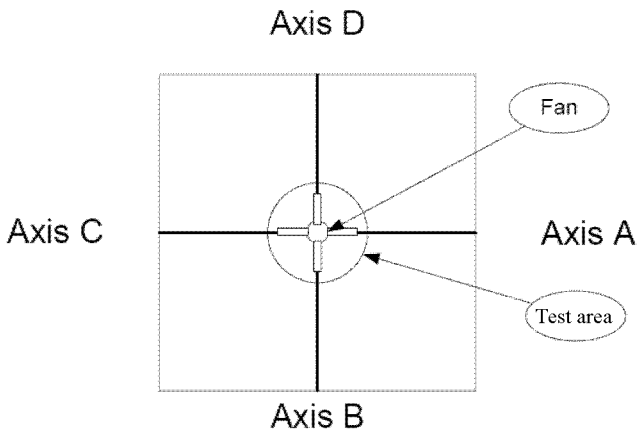

Figure 2 to Appendix U to Subpart B of Part 430: Testing Room and Sensor Arm Axes

* * * * *

(6) Place the sensors at intervals of 4 ± 0.0625 inches along a sensor arm, starting with the first sensor at the point where the four axes intersect. Do not touch the actual sensor prior to testing. Use enough sensors to record air delivery within a circle 8 inches larger in diameter than the blade span of the ceiling fan being tested. The experimental set-up is shown in Figure 3 of this appendix.

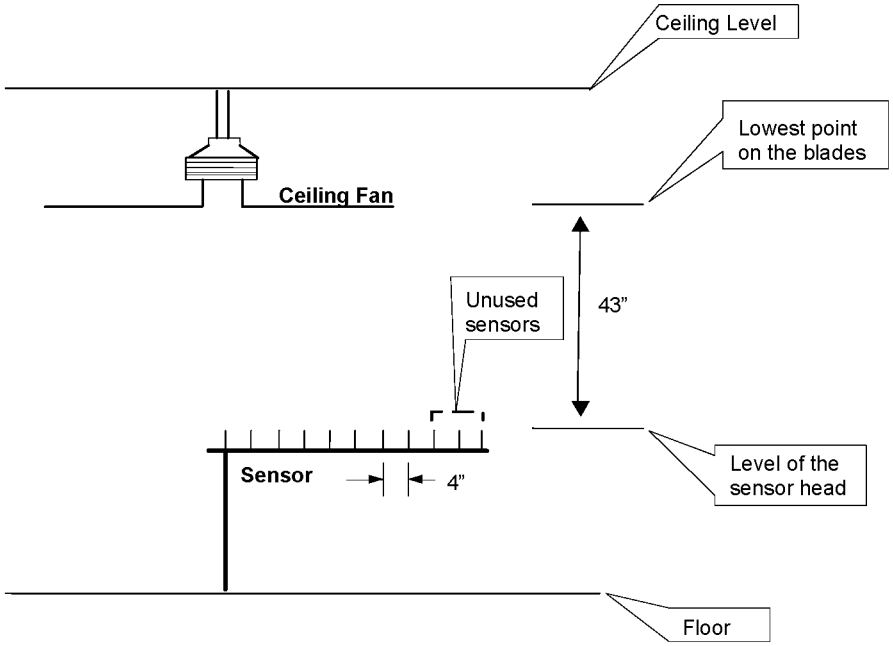

Figure 3 to Appendix U to Subpart B of Part 430: Air Delivery Room Set-Up for Small-Diameter Ceiling Fans

* * * * *

3.2.3. Multi-Head Ceiling Fan Test Set-Up

Hang a multi-headed ceiling fan from the ceiling such that one of the ceiling fan heads is centered directly over sensor 1 (*i.e.,* at the intersection of axes A, B, C, and D). The distance between the lowest point any of the fan blades of the centered fan head can reach and the air velocity sensors is to be such that

it is the same as for all other small-diameter ceiling fans (see Figure 3 of this appendix). If the multi-head ceiling fan has an oscillating function (*i.e.,* the fan heads change their axis of rotation relative to the ceiling) that can be switched off, switch it off prior to taking air velocity measurements. If any multi-head fan does not come with the blades preinstalled, install fan blades only on the fan head that will be directly centered over the intersection of the sensor axes. (Even if the fan heads in a multi-head ceiling fan would typically oscillate when the blades are installed on all fan heads, the ceiling fan is subject to this test procedure if the centered fan head does not oscillate when it is the only fan head with the blades installed.) If the fan blades are preinstalled on all fan heads, measure air velocity in accordance with section 3.3 of this appendix except turn on only the centered fan head. Take the power consumption measurements separately, with the fan blades installed on all fan heads and with any oscillating function, if present, switched on.

* * * * *

3.3 *Active mode test measurement for low-speed small-diameter, very-small-diameter and high-speed small-diameter ceiling fans.*

3.3.1 *Test conditions to be followed when testing:*

* * * * *

(4) If present, turn off any oscillating function causing the axis of rotation of the fan head(s) to change relative to the ceiling during operation prior to taking air velocity measurements. Turn on any oscillating function prior to taking power measurements.

* * * * *

3.3.2 *Air Velocity and Power Consumption Testing Procedure:*

Measure the air velocity (fpm) and power consumption (W) for HSSD ceiling fans until stable measurements are achieved, measuring at high speed only. Measure the air velocity and power consumption for LSSD and VSD ceiling fans that also meet the definition of an LSSD fan until stable measurements are achieved, measuring first at low speed and then at high speed. Air velocity and power consumption measurements are considered stable for high speed if:

(1) The average air velocity for each sensor varies by less than 5% or 2 fpm, whichever is greater, compared to the average air velocity measured for that same sensor in a successive set of air velocity measurements, and

(2) Average power consumption varies by less than 1% in a successive set of power consumption measurements.

Air velocity and power consumption measurements are considered stable for low speed if:

(1) The average air velocity for each sensor varies by less than 10% or 2 fpm, whichever is greater, compared to the average air velocity measured for that same sensor in a successive set of air velocity measurements, and

(2) Average power consumption varies by less than 1% in a successive set of power consumption measurements.

These stability criteria are applied differently to ceiling fans with airflow not directly downward. See section 3.3.3 of this appendix.

* * * * *

Step 2: Set software up to read and record air velocity, expressed in feet per minute (fpm) in 1 second intervals. (Temperature does not need to be recorded in 1 second intervals.) Record current barometric pressure.

Step 3: Allow test fan to run 15 minutes at rated voltage and at high speed if the ceiling fan is an HSSD ceiling fan. If the ceiling fan is an LSSD or VSD ceiling fan that also meets the definition of an LSSD fan, allow the test fan to run 15 minutes at the rated voltage and at low speed. Turn off all forced-air environmental conditioning equipment entering the chamber (*e.g.,* air conditioning), close all doors and vents, and wait an additional 3 minutes prior to starting test session.

Step 4a: For a rotating sensor arm: Begin recording readings. Starting with Axis A, take 100 air velocity readings (100 seconds run-time) and record these data. For all fans except multi-head fans and fans capable of oscillating, also measure power during the interval that air velocity measurements are taken. Rotate the arm and repeat for Axes B, C, and D; save these data as well. Record the average value of the power measurement in watts (W) (400 readings). Record the average value of the air velocity readings for each sensor in feet per minute (fpm) (400 readings).

Step 4b: For four fixed sensor arms: Begin recording readings. Take 100 air velocity readings (100 seconds run-time) and record these data. Take the readings for all sensor arms (Axes A, B, C, and D) simultaneously. For all fans except multi-head fans and fans capable of oscillating, also measure power during the interval that air velocity measurements are taken. Record the average value of the power measurement in watts (W) (100 readings). Record the average value of the air velocity readings for each sensor in feet per minute (fpm) (100 readings).

Step 5: Repeat step 4a or 4b until stable measurements are achieved.

Step 6: Repeat steps 1 through 5 above on high speed for LSSD and VSD ceiling fans that also meet the definition of an LSSD fan. *Note:* Ensure that temperature and humidity readings are maintained within the required tolerances for the duration of the test (all tested speeds). Forced-air environmental conditioning equipment may be used and doors and vents may be opened between test sessions to maintain environmental conditions.

Step 7: If testing a multi-mount ceiling fan, repeat steps 1 through 6 with the ceiling fan in the ceiling fan configuration (associated with either hugger or standard ceiling fans) not already tested.

If a multi-head ceiling fan includes more than one category of ceiling fan head, then test at least one of each unique category. A fan head with different construction that could affect air movement or power consumption, such as housing, blade pitch, or motor, would constitute a different category of fan head.

Step 8: For multi-head ceiling fans, measure active (real) power consumption in all phases simultaneously at each speed continuously for 100 seconds with all fan heads turned on, and record the average value at each speed in watts (W).

For ceiling fans with an oscillating function, measure active (real) power consumption in all phases simultaneously at each speed continuously for 100 seconds with the oscillating function turned on. Record the average value of the power measurement in watts (W).

For both multi-head ceiling fans and fans with an oscillating function, repeat power consumption measurement until stable power measurements are achieved.

* * * * *

3.3.3 *Air Velocity Measurements for Ceiling Fans with Airflow Not Directly Downward:*

Using the number of sensors that cover the same diameter as if the airflow were directly downward, record air velocity at each speed from the same number of continuous sensors with the largest air velocity measurements. This continuous set of sensors must be along the axis that the ceiling fan tilt is directed in (and along the axis that is 180 degrees from the first axis). For example, a 42-inch fan tilted toward axis A may create the pattern of air velocity shown in Figure 4 of this appendix. As shown in Table 1 of this appendix, a 42-inch fan would normally require 7 active sensors per axis. However, because the fan is not directed downward, all sensors must record data. In this case, because the set of sensors corresponding to maximum air velocity are centered 3 sensor positions away from the sensor 1 along the A axis, substitute the air velocity at A axis sensor 4 for the average air velocity at sensor 1. Take the average of the air velocity at A axis sensors 3 and 5 as a substitute for the average air velocity at sensor 2, take the average of the air velocity at A axis sensors 2 and 6 as a substitute for the average air velocity at sensor 3, etc. Lastly, take the average of the air velocities at A axis sensor 10 and C axis sensor 4 as a substitute for the average air velocity at sensor 7. Stability criteria apply after these substitutions. For example, air velocity stability at sensor 7 are determined based on the average of average air velocity at A axis sensor 10 and C axis sensor 4 in successive measurements. Any air velocity measurements made along the B–D axis are not included in the calculation of average air velocity.

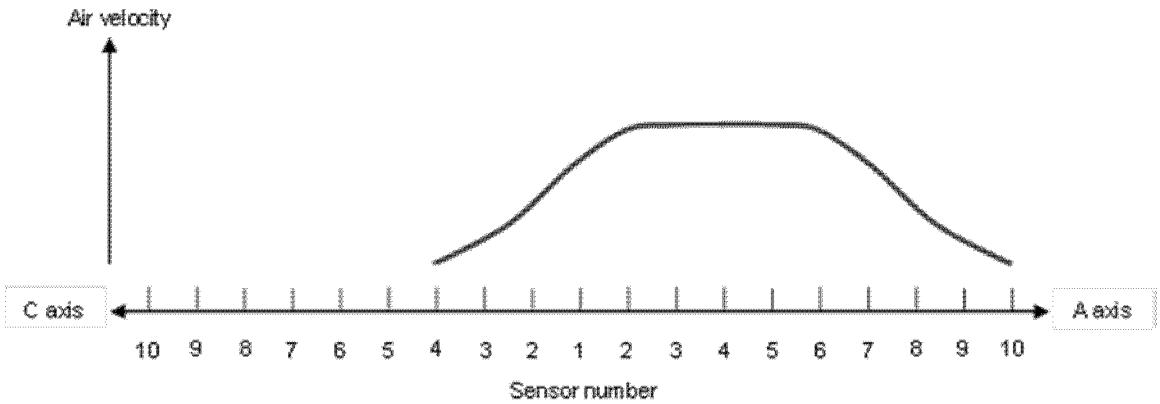

Figure 4 to Appendix U to Subpart B of Part 430: Example Air Velocity Pattern for Airflow Not Directly Downward

* * * * *

3.4.1 The test procedure is applicable to all large-diameter ceiling fans.

* * * * *

3.6 Test measurement for standby power consumption.

(1) * * *

(i) The ability to facilitate the activation or deactivation of other functions (including active mode) by remote switch (including remote control), internal sensor, or timer.

(ii) Continuous functions, including information or status displays (including clocks), or sensor-based functions.

* * * * *

4. Calculation of Ceiling Fan Efficiency From the Test Results:

4.1 Calculation of effective area for small-diameter ceiling fans:

Calculate the effective area corresponding to each sensor used in the test method for small-diameter ceiling fans (section 3.3 of this appendix) with the following equations:

(1) For sensor 1, the sensor located directly underneath the center of the ceiling fan, the effective width of the circle is 2 inches, and the effective area is:

$$\boldsymbol{Effective\ Area\ (sq.ft.) = \pi\left(\frac{2}{12}\right)^2 = 0.0873} \qquad \textbf{Eq. 1}$$

(2) For the sensors between sensor 1 and the last sensor used in the measurement, the effective area has a width of 4 inches. If a sensor is a distance *d,* in inches, from sensor 1, then the effective area is:

$$\boldsymbol{Effective\ Area\ (sq.ft.) = \pi\left(\frac{d+2}{12}\right)^2 - \pi\left(\frac{d-2}{12}\right)^2} \qquad \textbf{Eq. 2}$$

(3) For the last sensor, the width of the effective area depends on the horizontal displacement between the last sensor and the point on the ceiling fan blades furthest radially from the center of the fan. The total area included in an airflow calculation is the area of a circle 8 inches larger in diameter than the ceiling fan blade span (as specified in section 3 of this appendix).

Therefore, for example, for a 42-inch ceiling fan, the last sensor is 3 inches beyond the end of the ceiling fan blades. Because only the area within 4 inches of the end of the ceiling fan blades is included in the airflow calculation, the effective width of the circle corresponding to the last sensor would be 3 inches. The calculation for the effective area corresponding to the last sensor would then be:

$$\boldsymbol{Effective\ Area\ (sq.ft.) = \pi\left(\frac{d+1}{12}\right)^2 - \pi\left(\frac{d-2}{12}\right)^2 = \pi\left(\frac{24+1}{12}\right)^2 - \pi\left(\frac{24-2}{12}\right)^2 = 3.076} \qquad \textbf{Eq. 3}$$

For a 46-inch ceiling fan, the effective area of the last sensor would have a width of 5 inches, and the effective area would be:

$$\boldsymbol{Effective\ Area\ (sq.ft.) = \pi\left(\frac{d+3}{12}\right)^2 - \pi\left(\frac{d-2}{12}\right)^2 = \pi\left(\frac{24+3}{12}\right)^2 - \pi\left(\frac{24-2}{12}\right)^2 = 5.345} \qquad \textbf{Eq. 4}$$

4.2 Calculation of airflow and efficiency for ceiling fans:

Calculate fan airflow using the overall average of both sets of air velocity measurements at each sensor position from the successive sets of measurements that meet the stability criteria from section 3.3 of this appendix. To calculate airflow for HSSD,

LSSD, and VSD ceiling fans, multiply the overall average air velocity at each sensor position from section 3.3 (for high speed for HSSD, LSSD, and VSD ceiling fans that also meet the definition of an LSSD fan, and repeated for low speed only for LSSD and VSD ceiling fans that also meet the definition of an LSSD fan) by that sensor's effective area (see section 4.1 of this appendix), and then sum the products to obtain the overall calculated airflow at the tested speed.

For each speed, using the overall calculated airflow and the overall average power consumption measurements from the successive sets of measurements for small-diameter ceiling fans, or the airflow and power consumption measurements from section 3.5 of this appendix for all tested settings for large-diameter ceiling fans, calculate ceiling fan efficiency as follows:

$$\textbf{Ceiling Fan Efficiency } (CFM/W) = \frac{\sum_i (CFM_i \times OH_i)}{W_{Sb} \times OH_{Sb} + \sum_i (W_i \times OH_i)} \qquad \textbf{Eq. 5}$$

Where:

CFM_i = airflow at speed *i,*

OH_i = operating hours at speed *i,* as specified in Table 3 of this appendix,

W_i = power consumption at speed *i,*

OH_{Sb} = operating hours in standby mode, as specified in Table 3 of this appendix, and

W_{Sb} = power consumption in standby mode.

Calculate two ceiling fan efficiencies for multi-mount ceiling fans: One efficiency corresponds to the ceiling fan mounted in the configuration associated with the definition of a hugger ceiling fan, and the other efficiency corresponds to the ceiling fan mounted in the configuration associated with the definition of a standard ceiling fan.

TABLE 3 TO APPENDIX U TO SUBPART B OF PART 430: DAILY OPERATING HOURS FOR CALCULATING CEILING FAN EFFICIENCY

	No standby	With standby
Daily Operating Hours for LSSD and VSD ** Ceiling Fans		
High Speed	3.4	3.4
Low Speed	3.0	3.0
Standby Mode	0.0	17.6
Off Mode	17.6	0.0
Daily Operating Hours for HSSD Ceiling Fans		
High Speed	12.0	12.0
Standby Mode	0.0	12.0
Off Mode	12.0	0.0
Daily Operating Hours for Large-Diameter Ceiling Fans		
Active Mode *	12.0	12.0
Standby Mode	0.0	12.0
Off Mode	12.0	0.0

* The active mode hours must be apportioned equally across the number of active mode speeds tested (*e.g.,* if four speeds are tested, 25% of the active mode hours are apportioned to each speed).

** These values apply only to VSD fans that also meet the definition of an LSSD fan.

4.3 Calculation of airflow and efficiency for multi-head ceiling fans:

Calculate airflow for each fan head using the method described in section 4.2 of this appendix. To calculate overall airflow at a given speed for a multi-head ceiling fan, sum the airflow for each fan head included in the ceiling fan (a single airflow can be applied to each of the identical fan heads, but at least one of each unique fan head must be tested). The power consumption is the measured power consumption with all fan heads on. Using the airflow as described in this section, and power consumption measurements from section 3.3 of this appendix, calculate ceiling fan efficiency for a multi-head ceiling fan as follows:

$$\textbf{Ceiling Fan Efficiency } (CFM/W) = \frac{\sum_i (CFM_i \times OH_i)}{W_{Sb} \times OH_{Sb} + \sum_i (W_i \times OH_i)} \qquad \textbf{Eq. 6}$$

Where:

CFM_i = sum of airflows for each head at speed i,

OH_i = operating hours at speed i as specified in Table 3 of this appendix,

W_i = power consumption at speed i,

OH_{Sb} = operating hours in standby mode as specified in Table 3 of this appendix, and

W_{Sb} = power consumption in standby mode.

■ 9. Section 430.32 is amended by:

■ a. Revising the introductory text in paragraph (s)(2)(ii); and

■ b. Adding paragraph (s)(2)(ii)(F).

The revisions and additions read as follows:

§ 430.32 Energy and water conservation standards and their compliance dates.

* * * * *

(s) * * *

(2) * * *

(ii) The standards described in paragraph (s)(2)(i) of this section apply to ceiling fans except:

* * * * *

(F) Ceiling fans with blade spans greater than 24 feet.

* * * * *

[FR Doc. 2019–20827 Filed 9–27–19; 8:45 am]

BILLING CODE 6450–01–P

DEPARTMENT OF ENERGY

10 CFR Part 431

[EERE–2017–BT–STD–0021]

RIN 1904–AD90

Energy Conservation Program: Energy Conservation Standards for Unfired Hot Water Storage Tanks

AGENCY: Office of Energy Efficiency and Renewable Energy, Department of Energy.

ACTION: Request for information; reopening of public comment period.

SUMMARY: On August 9, 2019, the U.S. Department of Energy (DOE) published a request for information (RFI) pertaining to the energy conservation standards for unfired hot water storage tanks. The RFI provided an opportunity for submitting written comments, data, and information by September 23, 2019. Prior to the end of the comment period for the RFI, DOE received a request from the Air-Conditioning, Heating and Refrigeration Institute (AHRI) on September 13, 2019 seeking additional time to analyze data, possibly conduct further testing, and prepare comments. In light of this request, DOE is reopening the comment period for an additional 30 days and announcing that decision in this document.

DATES: The comment period for the RFI, published on August 9, 2019 (84 FR 39220), which closed on September 23, 2019, is hereby reopened and extended. DOE will accept written comments, data, and information in response to the RFI submitted no later than October 30, 2019.

ADDRESSES: Interested persons are encouraged to submit comments using the Federal eRulemaking Portal at *http://www.regulations.gov.* Follow the instructions for submitting comments. Alternatively, interested persons may submit comments, identified by docket number EERE–2017–BT–STD–0021, by any of the following methods:

1. *Federal eRulemaking Portal: http://www.regulations.gov.* Follow the instructions for submitting comments.

2. *Email: UnfiredCommercialWH2017STD0021@ee.doe.gov.* Include the docket number EERE–2017–BT–STD–0021 in the subject line of the message.

3. *Postal Mail:* Appliance and Equipment Standards Program, U.S. Department of Energy, Building Technologies Office, Mailstop EE–5B, 1000 Independence Avenue SW, Washington, DC 20585–0121. If possible, please submit all items on a compact disc (''CD''), in which case it is not necessary to include printed copies.

4. *Hand Delivery/Courier:* Appliance and Equipment Standards Program, U.S. Department of Energy, Building Technologies Office, 950 L'Enfant Plaza, SW, 6th Floor, Washington, DC 20024. Telephone: (202) 287–1445. If possible, please submit all items on a CD, in which case it is not necessary to include printed copies.

No telefacsimilies (faxes) will be accepted.

Docket: The docket for this activity, which includes **Federal Register** notices, comments, and other supporting documents/materials, is available for review at *http://www.regulations.gov.* All documents in the docket are listed in the *http://www.regulations.gov* index. However, some documents listed in the index, such as those containing information that is exempt from public disclosure, may not be publicly available.

The docket web page can be found at *https://www.regulations.gov/docket?D=EERE-2017-BT-STD-0021.* The docket web page contains instructions on how to access all documents, including public comments, in the docket.

FOR FURTHER INFORMATION CONTACT: Ms. Catherine Rivest, U.S. Department of Energy, Office of Energy Efficiency and Renewable Energy, Building Technologies Office, EE–5B, 1000 Independence Avenue SW, Washington, DC 20585–0121. Telephone: (202) 586–7335. Email: *ApplianceStandardsQuestions@ee.doe.gov.*

Mr. Eric Stas, U.S. Department of Energy, Office of the General Counsel, GC–33, 1000 Independence Avenue SW, Washington, DC 20585–0121. Telephone: (202) 586–5827. Email: *Eric.Stas@hq.doe.gov.*

For further information on how to submit a comment, or review other public comments and the docket, contact the Appliance and Equipment Standards Program staff at (202) 586–6636 or by email: *ApplianceStandardsQuestions@ee.doe.gov.*

SUPPLEMENTARY INFORMATION: DOE published a Request for Information (RFI) pertaining to the energy conservation standards for unfired hot water storage tanks on August 9, 2019. 84 FR 39220. The RFI initiated a data collection process to consider whether to amend DOE's current uniform national standards for unfired hot water storage tanks, and whether amending the standards for unfired hot water storage tanks would result in significant additional conservation of energy and be technologically feasible and economically justified. DOE requested written comment, data, and information pertaining to these standards by September 23, 2019.

On September 13, 2019, AHRI, an interested party in the matter, requested a sixty-day extension of the public comment period for the RFI that DOE previously published in the **Federal Register** on August 9, 2019.[1] More specifically, AHRI requested additional time to analyze data, possibly conduct further testing, and prepare comments.

After carefully considering this request, DOE has determined that a reopening of the comment period to allow additional time for interested parties to submit comments is appropriate. Therefore, DOE is reopening the comment period and will accept comments received on and before October 30, 2019, to provide interested parties additional time to prepare and submit comments. Accordingly, DOE will consider any comments received by this date, to be timely submitted.

Signed in Washington, DC, on September 23, 2019.

Alexander N. Fitzsimmons,

Acting Deputy Assistant Secretary for Energy Efficiency, Energy Efficiency and Renewable Energy.

[FR Doc. 2019–21174 Filed 9–27–19; 8:45 am]

BILLING CODE 6450–01–P

FEDERAL DEPOSIT INSURANCE CORPORATION

12 CFR Chapter III

RIN 3064–ZA11

Proposed Rescission of Policy Statements

AGENCY: Federal Deposit Insurance Corporation (FDIC).

ACTION: Request for comments.

SUMMARY: In an ongoing effort to streamline issuances by the FDIC to the public and to ensure that such issuances are timely, relevant, and effective, the FDIC initiated a comprehensive review of its Statements of Policy to identify those that could be rescinded. Additionally, the FDIC, in the 2017 report required by the Economic Growth and Regulatory Paperwork Reduction Act, committed to reviewing published guidance to identify any guidance that should be revised or rescinded because it is out-of-date or otherwise no longer relevant.

[1] Available at *https://www.regulations.gov/document?D=EERE-2017-BT-STD-0021-0002.*

DATES: Comments must be received by October 30, 2019.

ADDRESSES: You may submit comments, identified by RIN 3064–ZA11, by any of the following methods:

- *Agency website: https://www.fdic.gov/regulations/laws/federal/.* Follow the instructions for submitting comments on the Agency website.
- *Email: Comments@fdic.gov.* Include RIN 3064- ZA11 in the subject line of the message.
- *Mail:* Robert E. Feldman, Executive Secretary, Attention: Comments, Federal Deposit Insurance Corporation, 550 17th Street NW, Washington, DC 20429. Include RIN 3064–ZA11 in the subject line of the letter.
- *Hand Delivery:* Comments may be hand delivered to the guard station at the rear of the 550 17th Street building (located on F Street) on business days between 7:00 a.m. and 5:00 p.m.
- *Federal eRulemaking Portal: http://www.regulations.gov.* Follow the instructions for submitting comments.

Public Inspection: All comments received for this request for information must include the agency name and RIN 3064–ZA11. All comments received will be posted without change to *https://www.fdic.gov/regulations/laws/federal/*—including any personal information provided—for public inspection.

FOR FURTHER INFORMATION CONTACT:

Applicability of the Glass-Steagall Act to the Securities Activities of Insured Nonmember Banks:

William R. Baxter, Senior Policy Analyst, (202) 898–8514, *wbaxter@fdic.gov;* Michael B. Phillips, Counsel, (202) 898–3851 *mphillips@fdic.gov.*

Treatment of Collateralized Letters of Credit After Appointment of the FDIC as Conservator or Receiver and *Treatment of Collateralized Put Obligations After Appointment of the FDIC as Conservator or Receiver:*

Thomas P. Bolt, Senior Counsel, (703) 562–2046, *tbolt@fdic.gov;* Philip Mangano, Deputy Director, (571) 858–8279, *pmangano@fdic.gov;* Scott A. Greenup, Associate Director, (571) 858–8207, *sgreenup@fdic.gov;* George H. Williamson, Manager, (571) 858–8199, *gwilliamson@fdic.gov.*

Contracting With Firms That Have Unresolved Audit Issues With FDIC:

Thomas D. Harris, Deputy Director, (703) 562–2203, *tharris@fdic.gov;* Robert J. Brown, Supervisory Counsel, (703) 562–6068, *robertjbrown@fdic.gov.*

SUPPLEMENTARY INFORMATION: After a comprehensive review of FDIC Statements of Policy, given legislative and other changes since their publication in the **Federal Register**, the FDIC proposes to rescind the following four Statements of Policy because they are outdated and no longer necessary:

Applicability of the Glass-Steagall Act to Securities Activities of Subsidiaries of Insured Nonmember Banks;

Treatment of Collateralized Letters of Credit After Appointment of the FDIC as Conservator or Receiver;

Treatment of Collateralized Put Obligations After Appointment of the FDIC as Conservator or Receiver; and

Contracting with Firms that have Unresolved Audit Issues with the FDIC.

Although these Statements of Policy were not subject to public comment prior to their adoption, the FDIC Board has, on a discretionary basis, elected to provide a period for public comment on the proposed rescission of these Policy Statements.

Proposed Rescissions of Statements of Policy

(a) Statement of Policy on Applicability of the Glass-Steagall Act to Securities Activities of Subsidiaries of Insured Nonmember Banks

This 1982 Statement of Policy addresses the applicability of sections 20 and 32 of the Banking Act of 1933 (Glass Steagall Act) to the securities activities of subsidiaries of insured nonmember banks.[1] The Statement of Policy states the opinion of the FDIC Board that the Glass Steagall Act does not prohibit an insured nonmember bank from establishing an affiliate relationship with, or organizing or acquiring, a subsidiary corporation that engages in the business of issuing, underwriting, selling, or distributing stocks, bonds, or other securities. The 1982 Statement of Policy was superseded in its entirety by the enactment of the Gramm-Leach-Bliley Act (GLBA).[2] GLBA allowed commercial banks, investment banks, securities firms, and insurance companies to consolidate and operate as financial conglomerates. Therefore, the information and guidance contained in the 1982 Statement of Policy is out-of-date. For this reason, the FDIC is proposing rescission of the 1982 Statement of Policy.

(b) Statement of Policy on Treatment of Collateralized Letters of Credit After Appointment of the FDIC as Conservator or Receiver

This Statement of Policy was adopted by the FDIC on May 19, 1995, in order to clarify how the FDIC as conservator or receiver of a failed insured depository institution (IDI) would treat certain capital markets financing transactions using collateralized letters of credit (CLOCs) issued by IDIs prior to August 9, 1989, the date on which the Financial Institutions Reform, Recovery, and Enforcement Act of 1989[3] (FIRREA) was signed into law.[4] The Statement of Policy applies only to CLOCs (i) utilized in capital markets financing transactions originally issued by IDIs prior to August 9, 1989, and any subsequent renewal, replacement or extension of such CLOCs; and (ii) where the security interest in collateral pledged by the IDI was both perfected and legally enforceable under applicable law. The Statement of Policy does not apply to trade letters of credit or letters of credit issued for any other purpose.

The Statement of Policy provides that after its appointment as conservator or receiver of a failed IDI, the FDIC may either (i) continue any CLOCs as enforceable under the terms of the contract during the pendency of the conservatorship or receivership, or (ii) call, redeem or prepay any CLOC by its statutory power to repudiate or disaffirm contracts entered into by the IDI.

Based on market research, the FDIC has concluded, to the best of its knowledge, that it is unlikely that any public or privately issued transactions of the type covered by the Statement of Policy remain outstanding at this time. Therefore, the FDIC is seeking public comment on the continued need for the Statement of Policy and, if all such transactions have terminated, the rescission of this Statement of Policy.

(c) Statement of Policy on Treatment of Collateralized Put Obligations After Appointment of the FDIC as Conservator or Receiver

This Statement of Policy was adopted by the FDIC on July 9, 1991, in order to explain how the FDIC as conservator or receiver of a failed IDI would treat certain capital markets financing transactions using collateralized put obligations—also referred to as ''collateralized put options'' (CPOs)—issued by IDIs prior to August 9, 1989, the date on which FIRREA was signed into law.[5] The Statement of Policy applies only to CPOs (i) issued by IDIs in connection with capital markets financing transactions, including the formation of publicly offered unit investment trusts and other sales of an

[1] 47 FR 38984. (*https://www.govinfo.gov/content/pkg/FR-1982-09-03/pdf/FR-1982-09-03.pdf*).

[2] Public Law 106–102, 113 Stat. 1338, § 101 (1999).

[3] Public Law 101–73, 103 Stat. 103 (1989).

[4] 60 FR 27976. (*https://www.govinfo.gov/content/pkg/FR-1995-05-26/pdf/95-12992.pdf*).

[5] 56 FR 36152. (*https://cdn.loc.gov/service/ll/fedreg/fr056/fr056147/fr056147.pdf*).

IDI's portfolio securities, prior to August 9, 1989, and any subsequent renewal, replacement or extension of such CPOs; and (ii) collateralized by property owned and pledged by the IDI, and in which the security interest granted is both perfected and legally enforceable.

The Statement of Policy explains that the FDIC as conservator or receiver has the right to call, redeem or prepay any CPOs by repudiation or disaffirmance of the applicable written contract entered into by the IDI, either directly by cash payment in exchange for release of collateral or by liquidation of the collateral by a trustee or other secured party.

Based on market research, the FDIC has concluded, to the best of its knowledge, that it is unlikely that any public or privately issued transactions of this type remain outstanding at this time. Therefore, the FDIC is seeking public comment on the continued need for the Statement of Policy and, if all such transactions have terminated, the rescission of this Statement of Policy.

(d) Statement of Policy on Contracting With Firms That Have Unresolved Audit Issues With FDIC

The *Statement of Policy on Contracting with Firms That Have Unresolved Audit Issues With FDIC* (1997 Statement of Policy) was not approved by the FDIC Board but it is being consolidated in this notice for convenience and completeness.

The 1997 Statement of Policy was adopted to address situations in which the FDIC seeks to contract with firms with which there are unresolved audit issues.[6] The 1997 Statement of Policy established certain rights and procedures for the handling of contracting parties that have unresolved audit issues, as determined by various FDIC auditing agents. After review of the relevant Statement of Policy, the FDIC has concluded that the document may give rise to *de facto* exclusions from future FDIC contracting opportunities in a manner that is inconsistent with procedural protections specified in 12 CFR 367.

In determining whether to revise or rescind the relevant Statement of Policy, the FDIC considered a variety of factors, including whether or not the Policy provided the FDIC and its various audit agents with essential or additional protections regarding the repayment of challenged amounts. The FDIC has determined that existing remedies are sufficient to allow the FDIC and its agents to pursue such challenged amounts without the need for those measures specified in the Statement of Policy. Therefore, the FDIC proposes to rescind this Statement of Policy, and seeks comment on this action.

Authority: 12 U.S.C. 1811 *et seq.*

Federal Deposit Insurance Corporation.

By order of the Board of Directors.

Dated at Washington, DC, on September 17, 2019.

Robert E. Feldman,

Executive Secretary.

[FR Doc. 2019–20588 Filed 9–27–19; 8:45 am]

BILLING CODE 6714–01–P

[6] 62 FR 13382. (*https://www.govinfo.gov/content/pkg/FR-1997-03-20/pdf/97-6995.pdf*).

DEPARTMENT OF TRANSPORTATION

Federal Aviation Administration

14 CFR Part 39

[Docket No. FAA–2019–0701; Product Identifier 2019–NM–107–AD]

RIN 2120–AA64

Airworthiness Directives; Embraer S.A. Airplanes

AGENCY: Federal Aviation Administration (FAA), DOT.

ACTION: Notice of proposed rulemaking (NPRM).

SUMMARY: The FAA proposes to adopt a new airworthiness directive (AD) for certain Embraer S.A. Model ERJ 190–100 STD, –100 LR, –100 IGW, –200 STD, –200 LR, and –200 IGW airplanes. This proposed AD was prompted by reports of structural cracks in the wing lower skin stringers on both half wings. This proposed AD would require repetitive inspections of the lower skin stringers on both half wings for cracking or fuel leakage, and applicable related investigative and corrective actions, as specified in an Agência Nacional de Aviação Civil (ANAC) Brazilian AD, which will be incorporated by reference. The FAA is proposing this AD to address the unsafe condition on these products.

DATES: The FAA must receive comments on this proposed AD by November 14, 2019.

ADDRESSES: You may send comments, using the procedures found in 14 CFR 11.43 and 11.45, by any of the following methods:

- *Federal eRulemaking Portal:* Go to *http://www.regulations.gov.* Follow the instructions for submitting comments.
- *Fax:* 202–493–2251.
- *Mail:* U.S. Department of Transportation, Docket Operations, M–30, West Building Ground Floor, Room W12–140, 1200 New Jersey Avenue SE, Washington, DC 20590.
- *Hand Delivery:* Deliver to Mail address above between 9 a.m. and 5 p.m., Monday through Friday, except Federal holidays.

For the material identified in this proposed AD that will be incorporated by reference (IBR), contact National Civil Aviation Agency, Aeronautical Products Certification Branch (GGCP), Rua Laurent Martins, n° 209, Jardim Esplanada, CEP 12242–431—São José dos Campos—SP, Brazil; telephone 55 (12) 3203–6600; email *pac@anac.gov.br;* internet *www.anac.gov.br/en/.* You may find this IBR material on the ANAC website at *https://sistemas.anac.gov.br/certificacao/DA/DAE.asp.* You may view this IBR material at the FAA, Transport Standards Branch, 2200 South 216th St., Des Moines, WA. For information on the availability of this material at the FAA, call 206–231–3195. It is also available in the AD docket on the internet at *http://www.regulations.gov* by searching for and locating Docket No. FAA–2019–0701.

Examining the AD Docket

You may examine the AD docket on the internet at *http://www.regulations.gov* by searching for and locating Docket No. FAA–2019–0701; or in person at Docket Operations between 9 a.m. and 5 p.m., Monday through Friday, except Federal holidays. The AD docket contains this NPRM, the regulatory evaluation, any comments received, and other information. The street address for Docket Operations is listed above. Comments will be available in the AD docket shortly after receipt.

FOR FURTHER INFORMATION CONTACT: Krista Greer, Aerospace Engineer, International Section, Transport Standards Branch, FAA, 2200 South 216th St., Des Moines, WA 98198; telephone and fax 206–231–3221.

SUPPLEMENTARY INFORMATION:

Comments Invited

The FAA invites you to send any written relevant data, views, or arguments about this proposal. Send your comments to an address listed under the **ADDRESSES** section. Include ''Docket No. FAA–2019–0701; Product Identifier 2019–NM–107–AD'' at the beginning of your comments. The FAA specifically invites comments on the overall regulatory, economic, environmental, and energy aspects of this NPRM. The FAA will consider all comments received by the closing date and may amend this NPRM based on those comments.

The FAA will post all comments received, without change, to *http://www.regulations.gov,* including any personal information you provide. The FAA will also post a report summarizing each substantive verbal contact received about this NPRM.

Discussion

The ANAC, which is the aviation authority for Brazil, has issued Brazilian AD 2019–06–01, effective June 17, 2019 (''Brazilian AD 2019–06–01'') (referred to after this as the Mandatory Continuing Airworthiness Information, or ''the MCAI''), to correct an unsafe condition for certain Embraer S.A. Model ERJ 190–100 STD, –100 LR, –100 IGW, –200 STD, –200 LR, and –200 IGW airplanes. The MCAI states:

> It has been found the occurrence of structural cracks in the wing lower skin stringers between ribs 7 and 10 on both half wings. The cracks propagation on these wing lower skin stringers may result in fuel leakage and reduced wing structural integrity.
>
> Since this condition may occur in other airplanes of the same type and affects flight safety, [related investigative and] a corrective action is required. Thus, sufficient reason exists to request compliance with this [Brazilian] AD in the indicated time limit.

Related IBR Material Under 1 CFR Part 51

Brazilian AD 2019–06–01 describes procedures for repetitive detailed inspections of the lower skin stringers on both half wings for cracking or fuel leakage, and applicable related investigative and corrective actions. Related investigative actions include a high frequency eddy current (HFEC) inspection of any area with crack indications to confirm the damage extension. Corrective actions include repairs. This material is reasonably available because the interested parties have access to it through their normal course of business or by the means identified in the **ADDRESSES** section.

FAA's Determination and Requirements of This Proposed AD

This product has been approved by the aviation authority of another country, and is approved for operation in the United States. Pursuant to a bilateral agreement with the State of Design Authority, the FAA has been notified of the unsafe condition described in the MCAI referenced above. The FAA is proposing this AD because the agency evaluated all the relevant information and determined the unsafe condition described previously is likely to exist or develop in other products of the same type design.

Proposed AD Requirements

This proposed AD would require accomplishing the actions specified in Brazilian AD 2019–06–01 described previously, as incorporated by reference, except for any differences identified as exceptions in the regulatory text of this AD.

Explanation of Required Compliance Information

In the FAA's ongoing efforts to improve the efficiency of the AD process, the FAA initially worked with Airbus and the European Aviation Safety Agency (EASA) to develop a process to use certain EASA ADs as the primary source of information for compliance with requirements for corresponding FAA ADs. The FAA has since coordinated with other manufacturers and civil aviation authorities (CAAs) to use this process. As a result, Brazilian AD 2019–06–01 would be incorporated by reference in the FAA final rule. This proposed AD would, therefore, require compliance with Brazilian AD 2019–06–01 in its entirety, through that incorporation, except for any differences identified as exceptions in the regulatory text of this proposed AD. Service information specified in Brazilian AD 2019–06–01 that is required for compliance with Brazilian AD 2019–06–01 will be available on the internet at *http://www.regulations.gov* by searching for and locating Docket No. FAA–2019–0701 after the FAA final rule is published.

Costs of Compliance

The FAA estimates that this proposed AD affects 29 airplanes of U.S. registry. The FAA estimates the following costs to comply with this proposed AD:

ESTIMATED COSTS FOR REQUIRED ACTIONS

Labor cost	Parts cost	Cost per product	Cost on U.S. operators
12 work-hours × $85 per hour = $1,020	$0	$1,020	$29,580

The FAA estimates the following costs to do any necessary on-condition actions that would be required based on the results of any required actions. The FAA has no way of determining the number of aircraft that might need these on-condition actions:

ESTIMATED COSTS OF ON-CONDITION ACTIONS

Labor cost	Parts cost	Cost per product
Up to 898 work-hours × $85 per hour = Up to $76,330	Negligible	Up to $76,330.

Authority for This Rulemaking

Title 49 of the United States Code specifies the FAA's authority to issue rules on aviation safety. Subtitle I, section 106, describes the authority of the FAA Administrator. Subtitle VII: Aviation Programs, describes in more detail the scope of the Agency's authority.

The FAA is issuing this rulemaking under the authority described in Subtitle VII, Part A, Subpart III, Section 44701: ''General requirements.'' Under that section, Congress charges the FAA with promoting safe flight of civil aircraft in air commerce by prescribing regulations for practices, methods, and procedures the Administrator finds necessary for safety in air commerce. This regulation is within the scope of that authority because it addresses an unsafe condition that is likely to exist or develop on products identified in this rulemaking action.

This proposed AD is issued in accordance with authority delegated by the Executive Director, Aircraft Certification Service, as authorized by FAA Order 8000.51C. In accordance

with that order, issuance of ADs is normally a function of the Compliance and Airworthiness Division, but during this transition period, the Executive Director has delegated the authority to issue ADs applicable to transport category airplanes and associated appliances to the Director of the System Oversight Division.

Regulatory Findings

The FAA determined that this proposed AD would not have federalism implications under Executive Order 13132. This proposed AD would not have a substantial direct effect on the States, on the relationship between the national Government and the States, or on the distribution of power and responsibilities among the various levels of government.

For the reasons discussed above, I certify this proposed regulation:

(1) Is not a ''significant regulatory action'' under Executive Order 12866,

(2) Will not affect intrastate aviation in Alaska, and

(3) Will not have a significant economic impact, positive or negative, on a substantial number of small entities under the criteria of the Regulatory Flexibility Act.

List of Subjects in 14 CFR Part 39

Air transportation, Aircraft, Aviation safety, Incorporation by reference, Safety.

The Proposed Amendment

Accordingly, under the authority delegated to me by the Administrator, the FAA proposes to amend 14 CFR part 39 as follows:

PART 39—AIRWORTHINESS DIRECTIVES

■ 1. The authority citation for part 39 continues to read as follows:

Authority: 49 U.S.C. 106(g), 40113, 44701.

§ 39.13 [Amended]

■ 2. The FAA amends § 39.13 by adding the following new airworthiness directive (AD):

Embraer S.A: Docket No. FAA–2019–0701; Product Identifier 2019–NM–107–AD.

(a) Comments Due Date

The FAA must receive comments by November 14, 2019.

(b) Affected ADs

None.

(c) Applicability

This AD applies to Embraer S.A. Model ERJ 190–100 STD, –100 LR, –100 IGW, –200 STD, –200 LR, and –200 IGW airplanes, certificated in any category, as identified in Agência Nacional de Aviação Civil (ANAC) Brazilian AD 2019–06–01, effective June 17, 2019 (''Brazilian AD 2019–06–01'').

(d) Subject

Air Transport Association (ATA) of America Code 57, Wings.

(e) Reason

This AD was prompted by reports of structural cracks in the wing lower skin stringers on both half wings. The FAA is issuing this AD to address such cracking, which could result in fuel leakage and reduced structural integrity of the wing.

(f) Compliance

Comply with this AD within the compliance times specified, unless already done.

(g) Requirements

Except as specified in paragraph (h) of this AD: Comply with all required actions and compliance times specified in, and in accordance with, Brazilian AD 2019–06–01.

(h) Exceptions to Brazilian AD 2019–06–01

(1) For purposes of determining compliance with the requirements of this AD: Where Brazilian AD 2019–06–01 refers to its effective date, this AD requires using the effective date of this AD.

(2) The ''Alternative method of compliance (AMOC)'' section of Brazilian AD 2019–06–01 does not apply to this AD.

(3) Where paragraph (a)(1) of Brazilian AD 2019–06–01 specifies an initial inspection time, this AD requires an initial inspection at the applicable time specified in paragraph (h)(3)(i) or (ii) of this AD, whichever occurs later.

(i) Before the accumulation of 17,000 total flight cycles or 27,000 total flight hours, whichever occurs first.

(ii) Within 680 flight cycles or 900 flight hours after the effective date of this AD, whichever occurs first.

(4) Where paragraph (a)(1)(ii) of Brazilian AD 2019–06–01 specifies to do a special detailed inspection (SDI) in case of any ''signal'' of cracks, this AD requires doing an SDI before further flight after the detection of any ''sign'' of structural cracks in the inspected area.

(i) Other FAA AD Provisions

The following provisions also apply to this AD:

(1) *Alternative Methods of Compliance (AMOCs):* The Manager, International Section, Transport Standards Branch, FAA, has the authority to approve AMOCs for this AD, if requested using the procedures found in 14 CFR 39.19. In accordance with 14 CFR 39.19, send your request to your principal inspector or local Flight Standards District Office, as appropriate. If sending information directly to the International Section, send it to the attention of the person identified in paragraph (j)(2) of this AD. Information may be emailed to: *9-ANM-116-AMOC-REQUESTS@faa.gov.* Before using any approved AMOC, notify your appropriate principal inspector, or lacking a principal inspector, the manager of the local flight standards district office/certificate holding district office.

(2) *Contacting the Manufacturer:* For any requirement in this AD to obtain instructions from a manufacturer, the instructions must be accomplished using a method approved by the Manager, International Section, Transport Standards Branch, FAA; or ANAC; or ANAC's authorized Designee. If approved by the ANAC Designee, the approval must include the Designee's authorized signature.

(j) Related Information

(1) For information about Brazilian AD 2019–06–01, contact National Civil Aviation Agency, Aeronautical Products Certification Branch (GGCP), Rua Laurent Martins, n° 209, Jardim Esplanada, CEP 12242–431—São José dos Campos—SP, Brazil; telephone 55 (12) 3203–6600; email *pac@anac.gov.br;* internet *www.anac.gov.br/en/.* You may find this IBR material on the ANAC website at *https://sistemas.anac.gov.br/certificacao/DA/DAE.asp.* You may view this Brazilian AD at the FAA, Transport Standards Branch, 2200 South 216th St., Des Moines, WA. For information on the availability of this material at the FAA, call 206–231–3195. Brazilian AD 2019–06–01 may be found in the AD docket on the internet at *http://www.regulations.gov* by searching for and locating Docket No. FAA–2019–0701.

(2) For more information about this AD, contact Krista Greer, Aerospace Engineer, International Section, Transport Standards Branch, FAA, 2200 South 216th St., Des Moines, WA 98198; telephone and fax 206–231–3221.

Issued in Des Moines, Washington, on September 16, 2019.

Suzanne Masterson,

Acting Director, System Oversight Division, Aircraft Certification Service.

[FR Doc. 2019–20829 Filed 9–27–19; 8:45 am]

BILLING CODE 4910–13–P

DEPARTMENT OF THE TREASURY

Internal Revenue Service

26 CFR Parts 1 and 54

[REG–136401–18]

RIN 1545–BP17

Application of the Employer Shared Responsibility Provisions and Certain Nondiscrimination Rules to Health Reimbursement Arrangements and Other Account-Based Group Health Plans Integrated With Individual Health Insurance Coverage or Medicare

AGENCY: Internal Revenue Service (IRS), Treasury.

ACTION: Notice of proposed rulemaking.

SUMMARY: This document sets forth proposed regulations to clarify the application of the employer shared responsibility provisions and certain nondiscrimination rules under the Internal Revenue Code (Code) to health

reimbursement arrangements (HRAs) and other account-based group health plans integrated with individual health insurance coverage or Medicare (individual coverage HRAs), and to provide certain safe harbors with respect to the application of those provisions to individual coverage HRAs. The proposed regulations are intended to facilitate the adoption of individual coverage HRAs by employers, and taxpayers generally are permitted to rely on the proposed regulations. The proposed regulations would affect employers, employees and their family members, and plan sponsors.

DATES: Written or electronic comments and requests for a public hearing must be received by December 30, 2019.

ADDRESSES: Submit electronic submissions via the Federal eRulemaking Portal at *https://www.regulations.gov* (indicate IRS and REG–136401–18) by following the online instructions for submitting comments. Once submitted to the Federal eRulemaking Portal, comments cannot be edited or withdrawn. The Department of the Treasury (Treasury Department) and the IRS will publish for public availability any comment received to its public docket, whether submitted electronically or in hard copy. Send hard copy submissions to: CC:PA:LPD:PR (REG–136401–18), Room 5203, Internal Revenue Service, P.O. Box 7604, Ben Franklin Station, Washington, DC 20044. Submissions may be hand-delivered Monday through Friday between the hours of 8 a.m. and 4 p.m. to CC:PA:LPD:PR (REG–136401–18), Courier's Desk, Internal Revenue Service, 1111 Constitution Avenue NW, Washington, DC 20224.

FOR FURTHER INFORMATION CONTACT: Concerning the proposed regulations, Jennifer Solomon, (202) 317–5500; concerning submissions of comments and requests for a public hearing, Regina Johnson, (202) 317–6901 (not toll-free numbers).

SUPPLEMENTARY INFORMATION:

I. Background

A. Individual Coverage HRAs and Related Guidance

On October 12, 2017, President Trump issued Executive Order 13813, ''Promoting Healthcare Choice and Competition Across the United States.'' [1] The Executive Order directed the Secretaries of the Treasury, Labor, and Health and Human Services to ''consider proposing regulations or revising guidance, to the extent permitted by law and supported by sound policy, to increase the usability of HRAs, to expand employers' ability to offer HRAs to their employees, and to allow HRAs to be used in conjunction with nongroup coverage.'' [2]

In response to the Executive Order, on October 23, 2018, the Departments of the Treasury, Labor, and Health and Human Services (the Departments) issued proposed regulations [3] under Public Health Service Act (PHS Act) section 2711 and the health nondiscrimination provisions [4] of the Health Insurance Portability and Accountability Act of 1996 (HIPAA) [5] and the Patient Protection and Affordable Care Act,[6] as amended by the Health Care Education and Reconciliation Act [7] (collectively, PPACA) (proposed integration regulations). The proposed integration regulations included a proposal to expand the potential use of HRAs and other account-based group health plans [8] (collectively referred to in this preamble as HRAs) by allowing the integration of HRAs with individual health insurance coverage, subject to certain conditions.

On June 14, 2019, the Departments finalized the proposed integration regulations, generally as proposed but with a number of revisions in response to comments (the final integration regulations).[9] The final integration regulations apply for plan years beginning on or after January 1, 2020.

B. Premium Tax Credit (Section 36B)

Section 36B allows the premium tax credit (PTC) to certain taxpayers to help with the cost of individual health insurance coverage enrolled in through an Exchange.[10] Under section 36B(a) and (b)(1), and § 1.36B–3(d), a taxpayer's PTC is the sum of the premium assistance amounts for all coverage months during the taxable year for individuals in the taxpayer's family.

An individual is eligible for the PTC for a month if the individual satisfies various requirements for the month (a coverage month). Among other requirements, under section 36B(c)(2), a month is not a coverage month for an individual if either: (1) The individual is eligible for coverage under an eligible employer-sponsored plan and that coverage is affordable and provides minimum value (MV); or (2) the individual enrolls in an eligible employer-sponsored plan, even if the coverage is not affordable or does not provide MV.[11]

In general, an eligible employer-sponsored plan is affordable for an employee if the amount the employee must pay for self-only coverage whether by salary reduction or otherwise (the employee's required contribution) for a plan does not exceed a percentage (the required contribution percentage [12]) of the employee's household income.[13] In addition, in general, an eligible employer-sponsored plan provides MV if the plan's share of the total allowed costs of benefits provided under the plan is at least 60 percent of the costs and if the plan provides substantial

[1] 82 FR 48385 (Oct. 17, 2017).

[2] Id.

[3] See 83 FR 54420 (Oct. 29, 2018).

[4] See Code sections 9802 and 9815, Employee Retirement Income Security Act (ERISA) sections 702 and 715, and PHS Act section 2705. Although Code section 9802 and ERISA section 702 were not amended by PPACA, the requirements of PHS Act section 2705 were also incorporated by reference into Code section 9815 and ERISA section 715. PPACA section 1201 moved the PHS Act nondiscrimination provisions from section 2702 to section 2705, with some modifications.

[5] Public Law 104–191.

[6] Public Law 111–148.

[7] Public Law 111–152.

[8] See § 54.9815–2711(d)(6)(i) for the definition of an account-based group health plan. This term does not include qualified small employer health reimbursement arrangements (QSEHRAs) (as defined under section 9831(d)), medical savings accounts (see section 220), or health savings accounts (see section 223). In addition, for purposes of the integration regulations (both proposed and final), the definition does not include an employer arrangement that reimburses the cost of individual health insurance coverage in a cafeteria plan under section 125.

[9] See 84 FR 28888 (June 20, 2019). In addition to the final integration regulations: (1) The Departments issued final regulations setting forth conditions under which certain HRAs will be recognized as limited excepted benefits; (2) the Department of Health and Human Services (HHS) issued final regulations to provide a special enrollment period in the individual market for individuals who newly gain access to an individual coverage HRA or who are newly provided a QSEHRA; (3) the Department of Labor (DOL) finalized a safe harbor to provide assurance that the individual health insurance coverage for which premiums are reimbursed by an HRA or a QSEHRA does not become part of an ERISA plan, provided certain conditions are satisfied (and the Departments provided a related clarification of the definition of the term ''group health insurance coverage''); and (4) the Treasury Department and the IRS finalized regulations regarding premium tax credit eligibility for individuals offered an individual coverage HRA, as explained in this preamble. In this document, this package of regulations is referred to collectively as the ''final regulations.''

[10] Exchanges are entities established under PPACA section 1311 or 1321, through which qualified individuals and qualified employers can purchase health coverage.

[11] See section 36B(c)(2)(C)(iii) and §§ 1.36B–2(c)(3) and 1.36B–3(c).

[12] See § 1.36B–2(c)(3)(v)(C). The required contribution percentage for 2020 is 9.78 percent (see Rev. Proc. 2019–29).

[13] See section 36B(c)(2)(C) and § 1.36B–2(c)(3)(v)(A)(*1*) and (*2*). See § 1.36B–2(c)(3)(v)(A)(*3*) for a safe harbor that, in certain circumstances, allows an employee to claim the PTC even if the offer of coverage ultimately is affordable.

coverage of inpatient hospitalization and physician services.[14]

An eligible employer-sponsored plan includes coverage under a self-insured group health plan[15] and is minimum essential coverage (MEC) unless it consists solely of excepted benefits.[16] An HRA is a self-insured group health plan and, therefore, is an eligible employer-sponsored plan.[17] Accordingly, an individual is ineligible for the PTC for a month if the individual is (1) covered by an HRA, or (2) eligible for an HRA that is affordable and provides MV for the month (provided the HRA does not consist solely of excepted benefits).

On October 23, 2018, in connection with the proposed integration regulations, the Treasury Department and the IRS proposed regulations under section 36B to provide guidance regarding the circumstances in which an individual coverage HRA would be considered to be affordable and to provide MV. On June 14, 2019, in connection with the final integration regulations, the Treasury Department and the IRS finalized the rules under section 36B, substantially as proposed but with some clarifications in response to comments (the final PTC regulations).[18]

Under the final PTC regulations, an individual coverage HRA is considered to be affordable for a month if the employee's required HRA contribution for the month does not exceed 1/12 of the product of the employee's household income for the taxable year and the required contribution percentage. The required HRA contribution is the excess of: (1) The monthly premium for the lowest cost silver plan for self-only coverage of the employee offered in the Exchange for the rating area in which the employee resides (the PTC affordability plan[19]), over (2) in general, the self-only amount the employer makes newly available to the employee under the individual coverage HRA for the month (the monthly HRA amount).[20] Under the final PTC regulations, an individual coverage HRA that is affordable is treated as providing MV. The final PTC regulations apply for taxable years beginning on or after January 1, 2020.

C. Employer Shared Responsibility Provisions (Section 4980H)

1. In General

The employer shared responsibility provisions under section 4980H apply to an employer that is an applicable large employer (ALE). In general, an employer is an ALE for a calendar year if it had an average of 50 or more full-time employees (including full-time equivalent employees) during the preceding calendar year.[21]

For any month, an ALE may be liable for an employer shared responsibility payment under either section 4980H(a) or 4980H(b), or neither, but an ALE may not be liable for a payment under both sections 4980H(a) and 4980H(b).[22] An ALE generally is liable for a payment under section 4980H(a) for a month if it fails to offer coverage under an eligible employer-sponsored plan to at least 95 percent of its full-time employees (and their dependents) and at least one full-time employee is allowed the PTC for purchasing individual health insurance coverage through an Exchange. An ALE is liable for a payment under section 4980H(b) for a month if it offers coverage under an eligible employer-sponsored plan to at least 95 percent[23] of its full-time employees (and their dependents), but at least one full-time employee is allowed the PTC for purchasing individual health insurance coverage through an Exchange, which may occur because the ALE did not offer coverage to that particular full-time employee or because the coverage the employer offered was unaffordable or did not provide MV.[24]

2. Section 4980H Affordability Safe Harbors Regarding Household Income

Whether an employee may claim the PTC depends on the rules under section 36B, including the rules for whether an offer of coverage by the employer is affordable and provides MV.[25] However, the regulations under section 4980H provide certain safe harbors for determining whether an ALE is treated as making an offer of coverage that is affordable for purposes of section 4980H. More specifically, as noted earlier in this preamble, whether an offer of an eligible employer-sponsored plan is affordable, both for purposes of section 36B and section 4980H, depends in part on the employee's household income. Because an employer generally does not know an employee's household income, § 54.4980H–5(e) provides that, for purposes of section 4980H(b), an employer may substitute for an employee's household income an amount based on the employee's wages from the Form W–2, ''Wage and Tax Statement,'' the employee's rate of pay, or the federal poverty line, using the household income safe harbors (the HHI safe harbors).[26]

The HHI safe harbors are optional and apply only for purposes of section 4980H(b). An ALE may choose to use one or more of the HHI safe harbors for all of its employees or for any reasonable category of employees, provided it does so on a uniform and consistent basis for all employees in a category. In addition, an ALE may use an HHI safe harbor only if the ALE offers its full-time employees and their dependents eligible employer-sponsored coverage that provides MV with respect to the self-only coverage offered to the employee. If, in applying one of the HHI safe harbors the offer of coverage is considered affordable, then the employer will not be subject to an employer shared responsibility payment under section 4980H(b) with respect to that employee, even if the employee is allowed the PTC.

3. Application of Section 4980H to Individual Coverage HRAs

In implementing the objectives of Executive Order 13813, the Treasury Department and the IRS considered the

[14] See section 36B(c)(2)(C)(ii); see also 80 FR 52678 (Sept. 1, 2015).

[15] See § 1.5000A–2(c).

[16] See section 5000A(f)(3) and § 1.5000A–2(g).

[17] See Notice 2013–54, 2013–40 IRB 287, Q&A 10.

[18] See 84 FR 28888 (June 20, 2019).

[19] The term ''affordability plan'' is also used in this preamble and refers to the lowest cost silver plan used to determine affordability of an individual coverage HRA, which for purposes of section 36B means the PTC affordability plan and for section 4980H means either the PTC affordability plan or the lowest cost silver plan determined under the safe harbors provided in the proposed regulations, if applicable.

[20] See § 1.36B–2(c)(5)(ii) for more information on how the required HRA contribution is determined, including in cases in which the employer makes the same amount available for all employees regardless of the number of individuals covered.

[21] See section 4980H(c)(2) and § 54.4980H–2. See also § 54.4980H–1(a) for definitions of the terms used in this preamble.

[22] For simplicity, this preamble refers to ALEs and employers, but to the extent the preamble is addressing the potential for liability under section 4980H, those terms refer to an ALE member. An ALE member is a person that, together with one or more other persons, is treated as a single employer that is an ALE, if applicable. Liability under section 4980H applies separately to each ALE member. See § 54.4980H–1(a)(5). Further, the reporting obligations under section 6056 also apply to ALE members and references to employers or ALEs with respect to reporting under section 6056 should be read to refer to ALE members.

[23] If an ALE offers coverage to all but five of its full-time employees (and their dependents), and five is greater than five percent of the employer's full-time employees, the employer will not be liable for an employer shared responsibility payment under section 4980H(a). See § 54.4980H–4.

[24] See § 54.4980H–5.

[25] See section 4980H(c)(3). See also §§ 54.4980H–1(a)(28) and 54.4980H–5(e)(1).

[26] Whether or not an employee has been offered affordable coverage for purposes of eligibility for the PTC is determined under section 36B(c)(2)(C)(i) and the regulations thereunder (as opposed to the section 4980H safe harbors).

application of section 4980H to an ALE that offers an individual coverage HRA. Accordingly, on November 19, 2018, the Treasury Department and the IRS issued Notice 2018–88,[27] which described a number of potential approaches related to the interaction of the proposed integration regulations and section 4980H.

For clarity, the notice confirmed that an individual coverage HRA is an eligible employer-sponsored plan, and, therefore, an offer of an individual coverage HRA constitutes an offer of an eligible employer-sponsored plan for purposes of section 4980H(a). Consequently, if an ALE offers an individual coverage HRA to at least 95 percent of its full-time employees (and their dependents), the ALE will not be liable for an employer shared responsibility payment under section 4980H(a) for the month, regardless of whether any full-time employee is allowed the PTC.

The notice also explained how section 4980H(b) (including the HHI safe harbors) would apply to an ALE that offers an individual coverage HRA, described potential additional affordability safe harbors related to offers of individual coverage HRAs, requested comments, and provided examples. The Treasury Department and the IRS received a number of comments in response to Notice 2018–88, all of which were considered and are addressed in this preamble. See part II of this preamble for a more detailed discussion of the approaches described in Notice 2018–88 and the extent to which those potential approaches are included in the proposed regulations.

D. Section 105

In general, section 105(b) excludes from gross income amounts received by an employee through employer-provided accident or health insurance if those amounts are paid to reimburse expenses for medical care (as defined in section 213(d)) incurred by the employee (for medical care of the employee, the employee's spouse, or the employee's dependents, as well as children of the employee who are not dependents but have not attained age 27 by the end of the taxable year) for personal injuries and sickness.

Section 105(h) provides, however, that excess reimbursements (as defined in section 105(h)(7)) paid to a highly compensated individual (as defined in section 105(h)(5) and § 1.105–11(d)) (an HCI)[28] under a self-insured medical reimbursement plan are includible in the gross income of the HCI if either (1) the plan discriminates in favor of HCIs as to eligibility to participate in the plan, or (2) the benefits provided under the plan discriminate in favor of HCIs (nondiscriminatory benefits rule).[29] Section 105(h)(4) provides that a self-insured medical reimbursement plan does not satisfy the nondiscriminatory benefits rule unless all benefits provided to HCIs are also provided to all other participants.[30] However, a plan that reimburses employees solely for premiums paid under an insured plan is treated as an insured plan and is not subject to these rules.[31]

The regulations under section 105(h) provide that, in order to satisfy the nondiscriminatory benefits rule under section 105(h)(4), all benefits made available under a self-insured medical reimbursement plan to an HCI (and the HCI's dependents) must also be made available to all other participants (and their dependents).[32] In addition, the regulations provide that ''any maximum limit attributable to employer contributions must be uniform for all participants and for all dependents of employees who are participants and may not be modified by reason of a participant's age or years of service.'' [33] The consequence of a plan failing to satisfy this nondiscriminatory benefits requirement is that any excess reimbursements paid under the plan to an HCI are includible in the gross income and wages of the HCI.

HRAs generally are subject to the rules under section 105(h) and its related regulations because they are self-insured medical reimbursement plans.[34] However, HRAs that make available reimbursements to employees only for premiums paid to purchase health insurance policies, including individual health insurance policies, but not other expenses, are not subject to the rules under section 105(h) and its related regulations.[35] Notice 2018–88 addressed the interaction of individual coverage HRAs and section 105(h) and explained potential future guidance. The Treasury Department and the IRS received comments in response to the section 105(h) safe harbor in Notice 2018–88, all of which were considered and are addressed in this preamble. See later in this preamble for a more detailed discussion of the approaches described in Notice 2018–88 and the extent to which those approaches are included in the proposed regulations.

II. Explanation of Provisions and Summary of Comments

Taking into account the comments received in response to Notice 2018–88, as well as comments received in response to the proposed integration regulations and proposed PTC regulations, the Treasury Department and the IRS propose the following regulations under sections 4980H and 105 to clarify the application of those sections to individual coverage HRAs and to provide related safe harbors to ease the administrative burdens of avoiding liability under section 4980H and avoiding income inclusion under section 105(h). These proposed regulations do not include any changes to the final integration regulations or the final PTC regulations.

A. Section 4980H Proposed Regulations

The Treasury Department and the IRS note that section 4980H relates only to offers of coverage by an ALE to its full-time employees (and their dependents). As a result, to the extent an employer is not an ALE, or is an ALE but offers an individual coverage HRA to employees who are not full-time employees, the employer need not consider the application of section 4980H in determining those offers, and, therefore, it need not identify an affordability plan for those employees.

1. Location-Related Issues

a. Location Safe Harbor—In General

As noted earlier in part I(B) of this preamble, under the final PTC regulations, whether an offer of an individual coverage HRA is affordable for an employee depends, in part, on the monthly premium for the PTC

[27] See Notice 2018–88, 2018–49 IRB 817.

[28] Generally, section 105(h)(5) and § 1.105–11(d) define an HCI to include any employee that is among the highest paid 25 percent of all employees (including the five highest paid officers, but not including employees excludible under § 1.105–11(c)(2)(iii) who are not participants in any self-insured medical reimbursement plan of the employer).

[29] See section 105(h)(1) and (2).

[30] See § 1.105–11(c)(3)(i).

[31] See § 1.105–11(b)(2).

[32] See § 1.105–11(c)(3)(i).

[33] Id.

[34] See § 1.105–11(b)(1); see also Notice 2002–45, 2002–28 CB 93.

[35] See § 1.105–11(b)(2). HRAs that provide for the reimbursement of premiums to purchase health insurance policies in addition to other medical care expenses are subject to the rules under section 105(h) and the regulations thereunder because the HRA amounts may be used to reimburse medical care expenses other than premiums for health insurance policies. PHS Act section 2716, as incorporated into the Code by section 9815, applies nondiscrimination rules similar to section 105(h) to insured coverage and may apply to HRAs that only provide for the reimbursement of premiums. However, under Notice 2011–1, 2011–2 IRB 259, the Departments determined that compliance with PHS Act section 2716 should not be required (and, thus, any sanctions for failure to comply would not apply) until after regulations or other administrative guidance of general applicability has been issued under PHS Act section 2716.

affordability plan for that employee (that is, the lowest cost silver plan for self-only coverage of the employee offered through the Exchange for the rating area in which the employee resides). In Notice 2018–88, the Treasury Department and the IRS expressed concerns about the burden on employers that could result from requiring affordability to be determined based on each employee's place of residence, noting that employees' places of residence might change over time and employers may have difficulty keeping their records up to date. Accordingly, Notice 2018–88 described a potential safe harbor under which, for purposes of determining affordability under section 4980H(b), an ALE would be allowed to use the lowest cost silver plan for the employee for self-only coverage offered through the Exchange in the rating area in which the employee's primary site of employment is located, instead of the lowest cost silver plan for the employee in the rating area in which the employee resides (the location safe harbor). The Treasury Department and the IRS requested comments on the location safe harbor and whether an alternative safe harbor would be preferable and, if so, why.

One commenter was not supportive of the need for a location safe harbor, asserting that employers will likely want to determine affordability based on the cost of the lowest cost silver plan where the employee resides and disagreeing with the premise that it is difficult for employers to track employees' current addresses. However, a number of commenters indicated that a location safe harbor is needed, but that the anticipated safe harbor is too narrow because it would require employers with worksites located in multiple rating areas, including national employers, to calculate affordability for section 4980H(b) purposes separately for numerous rating areas. One commenter suggested that larger employers may be unwilling to offer individual coverage HRAs if employers are required to track and align HRAs on a rating-area basis, noting that for traditional employer-sponsored coverage, employers generally need only look to the cost of a single plan to determine affordability.

Some commenters suggested that one lowest cost silver plan be used to determine affordability employer-wide, such as the lowest cost silver plan in the rating area in which the employer's headquarters is located. Some commenters suggested employers be allowed to use one lowest cost silver plan to determine affordability for all employees with a worksite in a particular state or metropolitan statistical area, which, at least one suggested, the Centers for Medicare & Medicaid Services (CMS) could determine and make available to the public. Some commenters suggested a nationwide affordability plan should be provided for purposes of section 4980H, which could apply for all employers, and could be calculated based on the national average cost of lowest cost silver plans, perhaps averaged over multiple years. One commenter noted that although a nationwide plan may have a relatively high cost, it would provide simplicity. Some commenters opposed broadening the location safe harbor, including providing a nationwide safe harbor, due to concerns about evasion of section 4980H and enabling lower contributions to individual coverage HRAs, relative to amounts determined based on an employee's actual residence.

As a general matter, the Treasury Department and the IRS acknowledge that in determining the affordability of traditional employer-sponsored coverage, employers generally use the cost of one plan (that is, the lowest cost plan providing MV that the employer offers to the employees) and that the cost of that plan does not vary by employee (or, in general, varies by broad categories of employees). In contrast, the affordability test for individual coverage HRAs is based on the cost of the applicable lowest cost silver plan for each employee, which will vary by employee, by virtue of the fact that the cost of individual health insurance coverage varies on an individual basis, including based on an individual's residence and age. The Treasury Department and the IRS recognize that this difference may impose additional complexity with respect to the application of section 4980H to individual coverage HRAs, as compared to traditional employer-sponsored coverage. However, for purposes of section 36B, whether coverage is affordable is an employee-by-employee determination and for an individual coverage HRA, where there is no traditional employer-sponsored coverage on which to base an employee contribution, the employee's required contribution must be based on the cost of an individual health insurance plan, as employees generally are required to have individual health insurance coverage in order to enroll in the individual coverage HRA. The Treasury Department and the IRS have considered ways in which, consistent with the law, application of the affordability test under the final PTC regulations can and should be modified in applying section 4980H. However, by virtue of the ways in which individual coverage HRAs differ from traditional employer-sponsored coverage, the determination of affordability under section 36B (and, accordingly, under section 4980H) differs for these two types of coverage, and the Treasury Department and the IRS expect that employers will take those differences into account in determining whether, and to whom, to offer an individual coverage HRA.

The Treasury Department and the IRS continue to be concerned about the burden imposed on employers in determining each full-time employee's place of residence, due to the fact that employees' places of residence might change with some frequency, and it could be difficult for employers to keep their records up to date. The Treasury Department and the IRS also recognize the administrative simplicity for employers with workers in different locations of being able to use the cost of a single plan to determine affordability for all workers. However, none of the suggested expansions of the location safe harbor would be based on a reasonable proxy for the cost that would determine whether the employee would be allowed the PTC (which is the basis for the employer shared responsibility payment under section 4980H(b)), and none would provide a substitute for a cost that the employer would otherwise be unable to identify in advance of the plan year. As a result, adoption of any of the suggested expansions of the location safe harbor could lead to a significant number of cases in which one or more of an ALE's full-time employees are allowed the PTC while the ALE is treated as providing those full-time employees affordable coverage, with the result that the ALE is not liable for an employer shared responsibility payment.

These concerns are particularly acute because of significant differences in individual health insurance plan premiums that exist in different geographic locations, including from rating area to rating area, not only across the country, but also within many states. Accordingly, an affordability plan based on a nationwide average cost or, in many cases, a statewide average cost, would allow an ALE with full-time employees in locations with above-average lowest cost silver plan premiums to offer an individual coverage HRA, the amount of which is based on an affordability calculation using the average cost. The ALE could then ensure that employees were informed of the ability to enroll in an

Exchange plan subsidized by a potentially larger PTC, if they declined the individual coverage HRA. In that case, the ALE would not only avoid an employer shared responsibility payment, but also would avoid the cost of funding the employees' individual coverage HRAs (or any other healthcare benefits). Meanwhile, those employers with employees in below-average cost locations generally could use the actual cost in those lower-cost locations to determine affordability for those employees.[36] This result would run counter to the language and intent of section 4980H, which directly ties liability for an employer shared responsibility payment to one or more full-time employees being allowed the PTC.

The Treasury Department and the IRS recognize that a safe harbor based on the employee's primary site of employment could raise similar issues of avoidance of the employer shared responsibility payment, but it would be on a much more limited scale. It is possible that the premium for the lowest cost silver plan based on an employee's worksite will be more expensive or less expensive than the premium for the lowest cost silver plan based on the employee's residence, in cases in which the employee resides in a location that has a different lowest cost silver plan than the location in which the worksite is located. However, the Treasury Department and the IRS expect that many employees live in relatively close proximity to where they work, in which case it is likely that the location used to determine the affordability plan for purposes of sections 4980H and 36B would be the same. Further, the Treasury Department and the IRS also expect that even if an employee does not live and work in the same location for purposes of determination of the lowest cost silver plan, the employee is likely to live and work in locations that are relatively close, in which case the variation between the cost of the lowest cost silver plan where the employee lives versus the cost of the lowest cost silver plan where the employee works is likely to be less significant than the variation that would be introduced by a statewide or national average plan cost.

Thus, the Treasury Department and the IRS have concluded that the cost of the affordability plan at an employee's primary site of employment is a reasonable proxy for the cost of the affordability plan at the employee's residence for purposes of section 4980H, while avoiding the burdens that may arise for some employers in keeping records of their employees' current residences. Therefore, the proposed regulations provide that for purposes of section 4980H(b), an employer may use the lowest cost silver plan for the employee for self-only coverage offered through the Exchange where the employee's primary site of employment is located for determining whether an offer of an individual coverage HRA to a full-time employee is affordable. Further, the proposed regulations provide that the location safe harbor may be used in combination with the other safe harbors provided in the proposed regulations.

In response to comments asking for a single affordability plan for purposes of section 4980H, the Treasury Department and the IRS note that an ALE that wants to contribute one set amount to individual coverage HRAs that would protect the ALE from liability under section 4980H(b) could set the amount by determining affordability based on the lowest cost silver plan that has the highest cost premium for self-only coverage for any of its full-time employees (that is, nationally or based on multiple rating areas or states). This would result, however, in employees who live in locations with lower premiums receiving a benefit beyond the minimum required to protect against liability under section 4980H (and, thus, a higher cost to the employer than necessary solely to protect against that liability), and permit those same employees to purchase more generous plans than employees living in the higher-premium locations.

Nonetheless, in view of the many differences in premiums geographically, and in view of the comments requesting a broader location safe harbor, the Treasury Department and the IRS recognize the simplicity that one or more such safe harbors could provide and the value to employers of being able to design uniform health coverage for all employees, without needing to tie the uniform amount to the highest cost affordability plan. Consequently, the Treasury Department and the IRS request comments regarding other methods of determining affordability under section 4980H that would not result in significant discrepancies between full-time employees being allowed the PTC and ALEs avoiding liability under section 4980H, or otherwise allow ALEs to avoid the costs of providing healthcare benefits by shifting those costs to the Federal government through access to the PTC. To the extent any method relies on data such as cost variances across geographic locations, variations of employee populations across geographic locations, or other similar data, considerations should include the availability of the data, including availability of that data at times sufficiently in advance to be usable by employers for determining plan designs for a subsequent year, how the data would be used both by employers and the IRS in determining the affordability plan for purposes of section 4980H, and how changes in the data over time would be integrated into the suggested methodology.

b. Identifying the Primary Site of Employment Under the Location Safe Harbor

With respect to the location safe harbor, commenters raised a number of questions as to how and when to determine an employee's primary site of employment. More specifically, commenters noted that determining the primary worksite for employees who work in multiple locations and do not have a set worksite could be challenging and asked that rules allow employers flexibility in making this determination. Commenters also asked for clarification on how the primary site of employment is determined for employees who telework, which commenters noted is increasing the geographic distribution of workers. In addition, commenters also asked for clarification about when in relation to the plan year an employee's worksite is determined, with one suggesting it be determined based on the worksite six months prior to the plan year or as of the date of hire. Commenters further requested that the proposed regulations address mid-year changes in worksite locations and that employers be able to use the initial affordability plan for the plan year regardless of later worksite changes.

In response to these comments, for purposes of the location safe harbor, the proposed regulations provide that an employee's primary site of employment generally is the location at which the employer reasonably expects the employee to perform services on the first day of the plan year (or on the first day the individual coverage HRA may take effect, for an employee who is not eligible for the individual coverage HRA on the first day of the plan year), except that the employee's primary site of employment is treated as changing if the location at which the employee performs services changes and the employer expects the change to be

[36] The Treasury Department and the IRS note that, in addition to considering section 4980H, employers will also need to take into account other applicable guidance in determining amounts to make available in individual coverage HRAs, including the same terms requirement (§ 54.9802–4(c)(3)) under the final integration regulations.

permanent or indefinite.[37] In that case, in general, the employee's primary site of employment is treated as changing no later than the first day of the second calendar month after the employee has begun performing services at the new location. This rule is intended to strike the appropriate balance between requiring that employee-specific, up-to-date information be used to determine affordability under section 4980H and allowing employers time to address the administrative aspects of accounting for an employee's change in primary worksite.

The proposed regulations also include a special rule for determining primary worksite for the first plan year that an employer offers an individual coverage HRA (or first offers an individual coverage HRA to a particular class of employees). Specifically, if an employer is first offering an individual coverage HRA to a class of employees, and the change in worksite occurs prior to the individual coverage HRA's initial plan year, the employee's primary site of employment is treated as changing no later than the later of the first day of the plan year or the first day of the second calendar month after the employee has begun performing services at the new location. This is to provide certainty to employers first offering individual coverage HRAs to account for changes in circumstances that may occur in the months leading up to the plan year, including in close proximity to the first day of the plan year. For subsequent plan years, the general rule should take into account, for instance, changes in residence after an open enrollment period but before the beginning of the plan year.

In the case of an employee who regularly works from home or at another worksite that is not on the employer's premises but who may be required by his or her employer to work at, or report to, a particular worksite, such as a teleworker with an assigned office space, the worksite to which the employee would report to provide services if requested is the applicable primary site of employment. The proposed regulations provide that in the case of an employee who works remotely from home or at another worksite that is not on the employer's premises and who otherwise does not have a particular assigned office space or a worksite to which to report, the employee's residence is the primary site of employment.

The Treasury Department and the IRS recognize that the manner in which employees report to work varies widely across employers and industries. Therefore, the Treasury Department and the IRS request comments on whether any further clarification is needed regarding determination of the primary site of employment for purposes of the section 4980H location safe harbor.

c. Employee Residence

Notwithstanding the location safe harbor, one commenter expressed an interest in using each employee's residence to determine affordability for purposes of section 4980H. The use of the location safe harbor under the proposed regulations is optional for an employer, and if an employer opts not to use the location safe harbor, then the PTC affordability plan (that is, the lowest cost silver plan for the employee based on the employee's residence) would be used to determine the affordability of the offer of the individual coverage HRA.[38] However, the Treasury Department and the IRS expect that most employers will choose to use the location safe harbor, in part because under the final integration regulations, an employer may offer and vary individual coverage HRAs for a class of employees whose primary site of employment is in the same rating area, but the final integration regulations do not provide a class of employees based on an employee's residence.[39] Thus, because the final integration regulations do not provide for a class of employees based on the location of employees' residences, an employer basing affordability on the residences of employees would need to use the lowest cost silver plan with the highest cost premium for self-only coverage at the residence of any employees in the class.

This commenter also requested clarification regarding when an employer may determine an employee's residence during the calendar year to identify the appropriate plan to be used to determine affordability, and included specific suggestions including a snapshot date six months prior to the plan year or date of hire for those not employed at that time. The proposed regulations do not provide any rules addressing the ability of an employer to identify the residence of the employee in the case of an employer who chooses to determine the affordability of the individual coverage HRA based on the residence of each employee instead of using the location safe harbor. However, the Treasury Department and the IRS request comments on whether, in the case of an individual coverage HRA and for purposes of determining the location of the employee's residence, rules allowing the use of a snapshot date in a specified period prior to the beginning of the plan year, rules allowing a short delay in the application of any change in residence, or a rule similar to one of those alternatives would be helpful to employers, or whether the availability of the location safe harbor, in conjunction with the final integration regulations, generally eliminates the need for such rules. Similar to the location safe harbor, any residence safe harbor would need to include rules providing when a change in an employee's residence must be taken into account.

d. Multiple Affordability Plans in One Rating Area

Although the final PTC regulations refer to the lowest cost silver plan offered through an Exchange for an employee in a rating area, there is not necessarily one lowest cost silver plan per rating area. Rather, CMS has advised the Treasury Department and the IRS that, in some rating areas, there are different lowest cost silver plans in different parts of the rating area because some issuers only offer coverage in parts of rating areas (specifically, by county or zip code). For purposes of the PTC, whether an offer of an individual coverage HRA to an employee is affordable depends, in part, on the premium for the lowest cost silver plan available to that employee, which may differ from the lowest cost silver plan available to another employee located in another part of the same rating area.

For the sake of clarity, the proposed regulations, therefore, provide that the lowest cost silver plan for an employee for a month, for purposes of the safe harbors in the proposed regulations, is the lowest cost silver plan in the part of the rating area that includes the employee's applicable location. For purposes of this preamble and the proposed regulations, an employee's applicable location is either the employee's primary worksite, if the

[37] The final integration regulations allow individual coverage HRAs to be offered based on different classes of employees. One class of employees, as set forth in § 54.9802–4(d)(2)(v), is employees whose primary site of employment is in the same rating area (with rating area defined in 45 CFR 147.102(b)). The final integration regulations do not provide a specific definition for primary site of employment, and the definition provided in the proposed regulations applies only for purposes of section 4980H.

[38] Note that, as discussed in part II(A)(4) of this preamble, although the safe harbors in the proposed regulations are optional, if an ALE chooses to use them, it must do so based on the classes of employees set forth in the final integration regulations. Also note that, later in this preamble, the Treasury Department and the IRS explain the extent to which the other safe harbors provided under the proposed regulations may apply to the PTC affordability plan, for purposes of section 4980H.

[39] Section 54.9802–4(d)(2)(v).

employer uses the location safe harbor, or the employee's residence, if the employer chooses not to use the location safe harbor.

ALEs should be aware of how this rule interacts with the final integration regulations. Specifically, for an ALE using the location safe harbor with multiple worksites within a rating area, it may be the case that for some employees one lowest cost silver plan applies and for other employees, with a worksite in another part of the same rating area, a different lowest cost silver plan applies, perhaps with substantially different premiums. In that sense, the amount the employer needs to make available under the individual coverage HRA, for purposes of avoiding potential liability for an employer shared responsibility payment under section 4980H(b), may vary by zip code or county, rather than by rating area. However, under the final integration regulations, employers may not create classes of employees based on a geographic area smaller than a rating area.[40] Accordingly, to the extent an ALE has multiple worksites in one rating area, the ALE will need to take these different rules into account in determining the amounts to be made available under an individual coverage HRA, and, in order to avoid potential liability for an employer shared responsibility payment under section 4980H(b), may need to base amounts made available in the HRA in a rating area on the most expensive lowest cost silver plan in any part of the rating area in which at least one employee has a primary worksite.

2. Age-Related Issues

a. Consideration of Age Safe Harbor

Under the final PTC regulations, for any given employee, the premium for the PTC affordability plan is based on the particular employee's relevant circumstances, including the particular employee's age. Consequently, even for employees residing in the same location (or working at the same location if the location safe harbor is applied), the cost of the applicable affordability plan is determined on an employee-by-employee basis.[41] In Notice 2018–88, the Treasury Department and the IRS acknowledged that determining the premium for the affordability plan for each employee based on his or her age might be burdensome for some employers, and requested comments on the administrative issues and burdens the age-based determination may raise and on safe harbors that would ease this burden and be consistent with the purpose and policies underlying section 4980H.

One commenter supported an employee-by-employee age-based affordability determination and, therefore, opposed an age-based safe harbor, asserting that employers will want to make HRA contributions based on employee ages. Therefore, the commenter did not see the need for an age-based safe harbor. However, several commenters stated that requiring the determination of affordability on an employee-by-employee basis, based on age, would be very burdensome for employers. These commenters requested an age-based safe harbor and indicated that the lack of such a safe harbor could discourage some larger employers from offering individual coverage HRAs, in particular for employers that want to provide a flat amount in the individual coverage HRA regardless of age.

Commenters provided various suggestions for how an age-based safe harbor could be designed. One commenter suggested that the safe harbor might provide that affordability may be determined based on a composite premium for an employer's employees, at a minimum, at a particular worksite, and preferably at a combination of regional or national worksites. The commenter also suggested a composite premium based on the lowest cost silver plan at a specified age (for example, the lowest cost silver plan for a 40-year-old person in the rating area of the worksite), which an employer could use to determine the cost of the affordability plan for all of its employees at the particular worksite. Another commenter suggested employers should be allowed to use the average age of all employees in each class of employees on the first day of the plan year to determine the premium for the section 4980H affordability calculation for all employees in that class of employees. One commenter suggested an age safe harbor could be based on age bands adopted in a state, while another commented that the use of age bands to develop a safe harbor would introduce too much complexity and variation.

The Treasury Department and the IRS acknowledge that determining the premium for the affordability plan for purposes of section 4980H for each full-time employee, based on age, may be burdensome for some employers. However, section 4980H incorporates section 36B for purposes of determining whether an ALE is subject to an employer shared responsibility payment under section 4980H(b), and the authority of the Treasury Department and the IRS to provide safe harbors under section 4980H that deviate significantly from the section 36B rules is limited. More specifically, as noted earlier in this preamble, the Treasury Department and the IRS have provided other section 4980H safe harbors, namely the HHI safe harbors, which have been designed to offer a reasonable proxy for information that the employer may not know or would bear significant burdens in determining. By contrast, an employer typically knows the ages of its employees for a variety of unrelated purposes; consequently, it is not the case that employers do not know, or would bear a significant burden in determining, an employee's age. In addition, the average age of a group of employees generally will not be a reasonable proxy for a particular employee's age because, depending on the group, the average age may differ markedly from the ages of the older and younger members of the group. Accordingly, any age-based safe harbor would likely result in a number of employees (those with an age greater than the safe harbor age) receiving the PTC while the employer would not be subject to an employer shared responsibility payment under section 4980H(b), including in some cases by employer design.

For these reasons, the proposed regulations do not provide a safe harbor for the age used to determine the premium of an employee's affordability plan. Rather, under the proposed regulations as under section 36B, affordability of the offer of an individual coverage HRA for purposes of section 4980H is determined, in part, based on each employee's age.

The Treasury Department and the IRS also note that as a practical matter, if an employer wants to make a single amount available under an individual coverage HRA to a class of employees and ensure it avoids an employer shared responsibility payment under section 4980H(b), in general, the employer can use the age of the oldest employee in the class of employees to determine the amount to make available under the HRA to that class of employees. However, if the employer does not make

[40] Section 54.9802–4(d)(2)(v).

[41] Also note that, under the final integration regulations, a plan sponsor of an individual coverage HRA may increase amounts made available under the HRA based on increases in the ages of participants in a class of employees subject to certain conditions. See § 54.9804–2(c)(3). Nothing in the proposed regulations affects the rules allowing plan sponsors of individual coverage HRAs to vary amounts made available based on participants' ages. However, ALEs that offer individual coverage HRAs will need to take into account both the final integration regulations and section 4980H in designing an individual coverage HRA offered to full-time employees.

available the full amount of the cost of the affordability plan under the HRA, the employer will also need to compare each full-time employee's required contribution to the applicable amount under an HHI safe harbor to ensure the offer is affordable for all full-time employees. Further, the employer would need to take into account any geographic variation in the cost of the affordability plan (that is, the employer would need to ensure that it is basing affordability on the most expensive lowest cost silver plan available to any employee in the class, which may not be the lowest cost silver plan for the oldest employee in the class depending on whether the lowest cost silver plan of a younger employee in the class in a different geographic location has a higher cost).

b. Age Used To Determine Premium for Affordability Plan for an Employee

One commenter requested information regarding when employers may determine the employee's age for purposes of determining the premium of the affordability plan, for purposes of section 4980H. To align with the rules issued under 45 CFR 147.102(a)(1)(iii) concerning the ability of issuers in the individual and small group markets to vary health insurance premiums based on age, the commenter requested that the Treasury Department and the IRS provide that an employee's age may be determined at the time of the policy issuance or renewal or, if an individual is added after the policy issuance or renewal date, the date the individual is added or enrolled in coverage.[42]

In response to this comment, and to provide clarity to employers, the proposed regulations specify the date as of which an employee's age is to be determined for a plan year for purposes of determining affordability under the section 4980H safe harbors.[43] Specifically, the proposed regulations provide that for an employee who is or will be eligible for an individual coverage HRA on the first day of the plan year, the employee's age for the plan year is the employee's age on the first day of the plan year, and for an employee who becomes eligible for an individual coverage HRA during the plan year, the employee's age for the remainder of the plan year is the employee's age on the date the HRA can first become effective for the employee. This rule is based on, but not an exact incorporation of, the age determination rule that applies for purposes of rate setting in the individual and small group markets, which is tied to the individual market policy issuance or renewal date. The proposed regulations include a rule based on the HRA plan year and HRA effective date instead, to provide more certainty and simplicity for employers.

c. Age Band Used To Identify Affordability Plan for All Employees

The Treasury Department and the IRS understand that, in almost all cases, the plan that is the lowest cost silver plan at one age in a particular location will be the lowest cost silver plan for individuals of all ages in that location. However, CMS has advised the Treasury Department and the IRS that it is theoretically possible that, in some cases, one plan might be the lowest cost silver plan at one age and another plan might be the lowest cost silver plan at another age, in the same location. If that were to occur, however, the differences in premium amounts of the different plans at the same age would be extremely small (less than two dollars).

Therefore, in order to avoid the need for employers to determine different lowest cost silver plans in one location for employees of different ages, and to simplify the information that the Exchanges will make available to employers, the proposed regulations provide that for purposes of the proposed safe harbors, the lowest cost silver plan for an employee for a month is the lowest cost silver plan for the lowest age band in the individual market for the employee's applicable location.

3. Look-Back Month Safe Harbor

a. In General

Under the final PTC regulations, the affordability of an individual coverage HRA for a month is determined, in part, based on the cost of the PTC affordability plan for that month. For example, an employee's required contribution for January 2020 for an individual coverage HRA would be based on the cost of the PTC affordability plan for January 2020. Further, Exchange plan premium information for a calendar year generally is not available until shortly before the beginning of the open enrollment period for that calendar year, which generally begins on November 1 of the prior calendar year.[44] In Notice 2018–88, the Treasury Department and the IRS noted that while this time frame is sufficient for individuals and Exchanges to determine potential PTC eligibility for the upcoming calendar year, the Treasury Department and the IRS are aware that employers generally determine the health benefits they will offer for an upcoming plan year (including the employees' required contributions) well in advance of the start of the plan year. Therefore, for an individual coverage HRA with a calendar-year plan year, employers generally would determine the benefits to offer, including the amount to make available in an HRA for the plan year, well before mid-to-late fall of the prior calendar year. Further, the Treasury Department and the IRS noted that under section 4980H, ALEs are intended to be able to decide whether to offer coverage sufficient to avoid an employer shared responsibility payment. ALEs are only able to make that choice if they have timely access to the necessary information.

To address this issue, Notice 2018–88 provided that the Treasury Department and the IRS anticipated issuing guidance that would allow an ALE sponsoring an individual coverage HRA with a calendar-year plan year to determine affordability for a year using the cost of the affordability plan for the employee's applicable location for the prior calendar year.[45]

A number of commenters supported this safe harbor, asserting that it would be problematic for employers to be required to wait until the fall to determine individual coverage HRA amounts for the upcoming year. However, one commenter opposed the safe harbor, based on concerns that, according to the commenter, the significant volatility in premiums in the individual market from year to year could impose additional costs on employees because individual coverage HRA amounts would be based on prior year individual market premiums and would not reflect current year individual market premiums.

The Treasury Department and the IRS acknowledge that premiums in the

[42] Under 45 CFR 147.102(a)(1)(iii), issuers are required to use the enrollee's age as of the date of policy issuance or renewal.

[43] The age identification rule in the proposed regulations does not apply for purposes of the final integration regulations, under which, in determining age with respect to variation in amounts made available to participants based on age in an individual coverage HRA, plan sponsors may determine the age of the participant using any reasonable method for a plan year, so long as the plan sponsor determines each participant's age using the same method for all participants in the class of employees for the plan year and the method is determined prior to the plan year. See § 54.9802–4(c)(3)(iii)(B). However, to the extent an ALE is offering an individual coverage HRA, the ALE will need to take into account both the final integration regulations and any rules under section 4980H; therefore, the Treasury Department and the IRS have provided a proposed rule under section 4980H that allows compliance with both sets of rules.

[44] See 45 CFR 155.410(e)(3).

[45] This safe harbor was referred to in Notice 2018–88 as the calendar year safe harbor.

individual market may vary from year to year and that a safe harbor based on prior premium information would allow ALEs to determine affordability based on premiums that likely will differ from the actual current year premiums. However, under section 4980H, ALEs are intended to be able to decide whether to offer coverage sufficient to avoid an employer shared responsibility payment, and they may only do so if they have timely access to the relevant information. Therefore, the proposed regulations include a safe harbor that allows employers to use prior premium information to determine affordability for purposes of section 4980H (the look-back month safe harbor), but with some modifications as compared to the anticipated safe harbor in Notice 2018–88, as described in the remainder of this section of the preamble.

As anticipated in Notice 2018–88, under the proposed regulations, an employer offering an individual coverage HRA with a calendar-year plan year may use the look-back month safe harbor. However, the proposed regulations provide additional specificity, to take into account that even within a calendar year, from calendar month to calendar month, the lowest cost silver plan in an employee's applicable location may change due to plan termination or because the plan that was the lowest cost silver plan closes to enrollment (sometimes referred to as plan suppression). Therefore, the proposed regulations provide that in determining an employee's required contribution for any calendar month, for purposes of section 4980H(b), an employer offering an individual coverage HRA with a calendar-year plan year may use the monthly premium for the lowest cost silver plan for January of the prior calendar year.

In addition, the proposed regulations provide that employers offering individual coverage HRAs with non-calendar year plan years (non-calendar year individual coverage HRAs) may also use the look-back month safe harbor, although in that case the look-back month is different. In this respect, the proposed regulations differ from Notice 2018–88, which provided that the Treasury Department and the IRS did not anticipate allowing employers offering non-calendar year individual coverage HRAs to use this safe harbor. However, the rule anticipated in Notice 2018–88 was based on the assumption that employers offering non-calendar year individual coverage HRAs would have the relevant premium information by November of the prior calendar year. The Treasury Department and the IRS now understand that this would not necessarily be the case as the affordability plan may change from month to month during the calendar year; thus, which plan is the affordability plan for a month generally will not be known until shortly before the relevant month.

Further, in Notice 2018–88, the Treasury Department and the IRS requested comments on whether this safe harbor should be allowed to be used by employers that offer non-calendar year individual coverage HRAs and, if so, the range of plan year start dates to which the safe harbor should apply. Some commenters requested that the safe harbor extend to non-calendar year individual coverage HRAs. One commenter recommended allowing, as a general rule, all employers with an individual coverage HRA to use the premiums for the affordability plan in effect six months prior to the first day of the plan year. Another commenter recommended allowing, as a general rule, all employers with individual coverage HRAs to use the premiums for the affordability plan in effect or published no longer than 12 months prior to the start of the plan year.

Based on these comments and that the affordability plan may change from month to month during the year and, therefore, may not be known by November of the prior year, the proposed regulations allow employers offering non-calendar year individual coverage HRAs to use the look-back month safe harbor, in order to provide those employers timely access to the information they need to determine the coverage sufficient to avoid an employer shared responsibility payment, as contemplated by section 4980H(b). More specifically, for an employer offering a non-calendar year individual coverage HRA, the proposed regulations provide that in determining an employee's required contribution for a calendar month, for purposes of section 4980H(b), an employer may use the monthly premium for the affordability plan for January of the current calendar year. The proposed regulations provide a different look-back month for employers offering non-calendar year individual coverage HRAs (that is, January of the current year) than those offering individual coverage HRAs with a calendar-year plan year (that is, January of the prior year) in order to strike the appropriate balance between providing employers with access to information sufficiently in advance of the plan year and avoiding the use of premium information that could be significantly out of date. The Treasury Department and the IRS note that the relevant premium information for non-calendar year individual coverage HRAs (that is, the premium for January of the current year) will be available by November 1 of the prior year, and, therefore, generally ALEs sponsoring non-calendar year individual coverage HRAs should have access to the necessary premium information sufficiently in advance of the start of the plan year. The Treasury Department and the IRS request comments on whether the proposed look-back month for non-calendar year individual coverage HRAs will be sufficient for individual coverage HRAs with plan years that begin relatively early in the calendar year and whether ALEs intend to offer individual coverage HRAs on a non-calendar year basis, including with plan years that begin early in the calendar year.

The proposed regulations provide that an ALE may use the look-back month safe harbor in addition to the other safe harbors included in the proposed regulations, and that an ALE may apply the look-back month safe harbor even if the ALE decides not to use the location safe harbor and, instead, bases the affordability plan on employee residence.

The proposed regulations also clarify that, although the look-back month safe harbor allows the employer to use premium information from the applicable look-back month to determine the cost of the affordability plan for each month of the current plan year, in determining the applicable premium, the employer must use the employee's applicable age for the current plan year and the employee's applicable location for the current month. In general, this means that the ALE may use the same premium (that is, the premium based on the applicable look-back month, applying current employee information) for each month of the plan year. However, to the extent the employee's applicable location changes during the plan year, although the ALE may continue to determine the monthly premium for the applicable lowest cost silver plan based on the applicable look-back month, the ALE must use the employee's new applicable location to determine that monthly premium. See parts II(A)(1)(b) and II(A)(2)(b) of this preamble for a discussion of the date as of which an employee's age is determined for purposes of the section 4980H safe harbors and the date as of which an employee's worksite is considered to have changed, for purposes of the location safe harbor.

Relatedly, Notice 2018–88 also included an anticipated safe harbor which allowed ALEs offering individual

coverage HRAs to assume that the cost of the affordability plan for the first month of the plan year is the cost of the affordability plan for all months of the plan year (the non-calendar year safe harbor). This safe harbor was primarily intended to provide certainty to non-calendar year individual coverage HRAs, for which the cost of the affordability plan would change mid-plan year (that is, upon the changing of the calendar year). Commenters supported the non-calendar year safe harbor, and the Treasury Department and the IRS continue to be of the view that ALEs need predictability with respect to the affordability plan that will apply for each month of the plan year. However, the proposed regulations do not include the non-calendar year safe harbor because it is generally subsumed by the look-back month safe harbor under the proposed regulations. Specifically, under the proposed regulations, the look-back month safe harbor applies to non-calendar year individual coverage HRAs and provides a look-back month to determine the cost of the affordability plan for each month of the plan year. As a result, the look-back month safe harbor addresses the issue underlying the non-calendar year safe harbor, and the Treasury Department and the IRS determined that a separate non-calendar year safe harbor would be largely duplicative and confusing. However, the Treasury Department and the IRS request comments on whether any employers do not intend to use the look-back month safe harbor and would, therefore, need a separate safe harbor allowing the use of the premium for the first month of the current plan year to determine affordability for all months of the plan year.

b. Adjustment to Look-Back Month Premium Amounts

Notice 2018–88 noted that the Treasury Department and the IRS considered whether to apply an adjustment to the cost of the affordability plan under the look-back month safe harbor, but did not anticipate proposing such an adjustment, to avoid complexity and due to uncertainty regarding how to determine an appropriate adjustment in all circumstances and for all years. The Treasury Department and the IRS requested comments on whether such an adjustment should be included in future guidance and, if so, how the adjustment should be calculated.

A number of commenters opposed applying an adjustment, asserting that, because of volatility in healthcare costs, it would be difficult to develop a benchmark that is representative of the market, and an adjustment could contribute to increasing healthcare costs, further complicate an already complicated rule, and cause confusion for employers. In contrast, a number of commenters supported an adjustment, suggesting that without an adjustment an employee with an individual coverage HRA may be priced out of the market and employer contributions required to satisfy section 4980H would be systematically undervalued.

Regarding the method for calculating an adjustment, commenters suggested basing the adjustment on the average of the three prior years' premium increases in the relevant individual market or PPACA's premium adjustment percentage. Commenters requested that the Treasury Department and the IRS work with HHS to compute these amounts and make them available to plan sponsors in a timely manner.

The Treasury Department and the IRS have considered these comments and continue to be concerned about the complexity and burdens that would be imposed by the application of an adjustment to the prior premiums under the look-back month safe harbor, and agree with commenters regarding the difficulty of producing an accurate adjustment. The Treasury Department and the IRS are concerned about the ability to produce a sufficiently accurate adjustment due to geographic variation in premiums (including geographic variations in the relative annual increases or decreases in premiums) and that the timing of access to information would hamper the ability to apply an adjustment based on up-to-date information. The Treasury Department and the IRS also considered applying more general adjustments (such as the Consumer Price Index overall medical care component or PPACA's premium adjustment percentage [46]) but are concerned that those adjustments would add complexity to the safe harbor while not reflecting premium changes in a way that is sufficiently specific to the employer's employees, including their geographic location. Therefore, under the proposed regulations, the look-back month safe harbor does not include an adjustment to the prior premium information. However, the Treasury Department and the IRS request comments on this issue and will continue to consider whether an adjustment is warranted, and how any such adjustment would be calculated, including in the event that the Treasury Department and the IRS observe that use of the look-back month safe harbor results in significant discrepancies in the affordability determinations as separately applied for purposes of sections 36B and 4980H.

4. Consistency Requirement and Conditions for the Safe Harbors

Notice 2018–88 provided that ALEs would not be required to use any of the anticipated section 4980H safe harbors for individual coverage HRAs, but that the Treasury Department and the IRS anticipated that some level of consistency would be required in the application of the anticipated safe harbors by an employer to its employees. The notice requested comments on the scope of such a requirement, including whether employers should be allowed to choose to apply the safe harbors to reasonable categories of employees, such as some or all of the categories identified in § 54.4980H–5(e)(2)(i), which apply for purposes of the HHI safe harbors.[47] One commenter supported the use of consistency requirements based on the current categories of employees used under § 54.4980H–5(e)(2)(i).

Under the proposed regulations, use of any of the safe harbors is optional for an ALE. However, rather than providing that a consistency requirement applies based on reasonable categories of employees as set forth in § 54.4980H–5(e)(2)(i), the proposed regulations provide that an ALE may choose to apply the safe harbors for any class of employees as defined in the final integration regulations,[48] provided the ALE does so on a uniform and consistent basis for all employees in the class. The proposed regulations base the consistency requirement for the safe harbors in the proposed regulations on the classes of employees in the final integration regulations for the sake of consistency with those rules and to reduce complexity for employers in complying with both sets of rules.

In addition, the proposed regulations clarify the conditions for using the proposed safe harbors, including the HHI safe harbors as applied to offers of individual coverage HRAs. Current regulations under section 4980H provide that an ALE may only use an HHI safe harbor if the ALE offers its full-time employees (and their dependents)

[46] See PPACA section 1302(c)(4).

[47] Under § 54.4980H–5(e)(2)(i), reasonable categories generally include specified job categories, the nature of compensation (hourly or salary), geographic location, and similar bona fide business criteria.

[48] Section 54.9802–4(d)(2). The proposed regulations refer to the definition of classes of employees in the final integration regulations but do not incorporate other related rules, such as the minimum class size requirement set forth in § 54.9802–4(d)(3).

eligible employer-sponsored coverage that provides MV with respect to the self-only coverage offered to the employee. Because an individual coverage HRA is deemed to provide MV by virtue of being affordable (and is not an independent determination as it is for other types of employer-sponsored coverage), the proposed regulations do not separately impose this MV requirement on the use of the safe harbors in the proposed regulations.

5. Application of Current HHI Safe Harbors to Individual Coverage HRAs

As described earlier in this preamble, under section 36B, whether an offer of coverage under an eligible employer-sponsored plan is affordable is based on whether the employee's required contribution exceeds the required contribution percentage of the employee's household income. Because an ALE generally will not know an employee's household income, the current section 4980H regulations set forth three HHI safe harbors under which an employer may compare the employee's required contribution to information that is readily available to the employer, rather than to actual household income.[49]

Notice 2018–88 provided that the Treasury Department and the IRS anticipate providing guidance clarifying that an ALE that offers an individual coverage HRA would be permitted to use the HHI safe harbors, subject to the applicable requirements, for purposes of section 4980H(b). Several commenters supported the intent to allow the use of the HHI safe harbors to determine the affordability of individual coverage HRAs.

As with other types of employer-sponsored coverage, employers that offer individual coverage HRAs will not know employees' household incomes. Therefore, the proposed regulations provide that an employer offering an individual coverage HRA to a class of employees may use the HHI safe harbors in determining whether the offer of the HRA is affordable for purposes of section 4980H(b).

The proposed regulations clarify how the HHI safe harbors apply to an offer of an individual coverage HRA. Specifically, the current HHI safe harbors assume that the employee's required contribution will be based on the lowest-cost self-only coverage that provides MV that the employer offers to the employee. The proposed regulations clarify that, in applying the HHI safe harbors to an offer of an individual coverage HRA, the employee's required HRA contribution is to be used, taking into account any other applicable safe harbors under the proposed regulations.

Further, the proposed regulations include technical updates to the current HHI safe harbors to reflect that the percentage used to determine affordability is the required contribution percentage (rather than a static 9.5 percent), which is adjusted in accordance with section 36B(c)(2)(C)(iv) and the regulations thereunder. The Treasury Department and the IRS clarified this issue in Notice 2015–87 and now have the opportunity to reflect that clarification in the regulation text.[50] The proposed regulations do not make substantive changes to the current HHI safe harbors as applied to employer-sponsored coverage that is not an individual coverage HRA.[51]

6. Minimum Value

As described earlier in this preamble, in general, under section 36B, an eligible employer-sponsored plan provides MV if the plan's share of the total allowed costs of benefits provided under the plan is at least 60 percent of the costs and if the plan provides substantial coverage of inpatient hospitalization and physician services.[52] Because of the differences between individual coverage HRAs and traditional group health plans, the final PTC regulations provide that an individual coverage HRA that is affordable is treated as providing MV.[53]

Notice 2018–88 explained that the MV definition under the proposed PTC regulations would apply for purposes of determining whether an ALE that offers an individual coverage HRA has made an offer that provides MV for purposes of section 4980H. Therefore, an individual coverage HRA that is affordable (taking into account any affordability safe harbors) would be treated as providing MV for purposes of section 4980H.

One commenter supported the MV rules for individual coverage HRAs, and one commenter opposed the rules, suggesting that any metal level plan should be allowed to be used to determine if an offer provides MV (rather than looking to the lowest cost silver plan). Some commenters suggested the use of a different metal level plan in determining affordability and MV for individual coverage HRAs more generally. The Treasury Department and the IRS considered these issues in connection with the final PTC regulations and addressed comments on these topics in the preamble to the final PTC regulations.[54] Further, section 4908H applies the MV standard by reference to section 36B, and no basis has been provided for applying a different standard under section 4980H. Therefore, under the proposed regulations, an individual coverage HRA that is affordable (as determined under the applicable section 36B rules, in combination with any applicable section 4980H safe harbors), is deemed to provide MV.

7. Reporting Under Sections 6055 and 6056

a. Section 6056

Section 6056 requires ALEs to file with the IRS and furnish to full-time employees information about whether the employer offers coverage to full-time employees and, if so, information about the coverage offered. An ALE that offers an individual coverage HRA to its full-time employees, just like all ALEs, is required to satisfy the section 6056 reporting requirements. ALEs use Form 1094–C, ''Transmittal of Employer-Provided Health Insurance Offer and Coverage Information Returns,'' and Form 1095–C, ''Employer-Provided Health Insurance Offer and Coverage,'' to satisfy the section 6056 reporting requirements.

Section 6056 and Form 1095–C require ALEs to report each full-time employee's required contribution.[55] Notice 2018–88 provided that the Treasury Department and the IRS anticipated that an ALE would not be required to report the employee's required contribution that is calculated under the proposed PTC regulations. An ALE would, instead, be required to report the employee's required contribution determined under the applicable safe harbors that were anticipated to be provided with respect to the calculation of an employee's required contribution for an individual coverage HRA under section 4980H. Notice 2018–88 also stated that the Treasury Department and the IRS were continuing to consider the application

[49] See § 54.4980H–5(e)(2).

[50] See Notice 2015–87, 2015–52 IRB 889, Q&A 12. In Notice 2015–87, the Treasury Department and the IRS clarified a number of issues related to section 4980H. The proposed regulations do not affect the guidance provided in that notice, which remains in effect. See also 81 FR 91755, 91758 (Dec. 19, 2016).

[51] The proposed regulations also provide technical updates to § 54.4980H–4(b), regarding mandatory offers of coverage, where the use of 9.5 percent needed to be updated to refer instead to the required contribution percentage. The updates incorporate the clarification provided in Notice 2015–87, Q&A 12 and are not substantive changes.

[52] See section 36B(c)(2)(C)(ii); see also 80 FR 52678 (Sept. 1, 2015).

[53] See § 1.36B–2(c)(3)(i)(B).

[54] See 84 FR 28888 (June 20, 2019), 28943–28946.

[55] See also § 301.6056–1(d)(1)(vi).

of section 6056 to an ALE that offers an individual coverage HRA and were anticipating providing additional guidance on these issues.

One commenter requested new reporting guidance as soon as possible. Another commenter requested that any new reporting guidance be provided at least 12 months prior to the effective date of any changes in reporting and asked the Treasury Department and the IRS to consider whether good faith reporting relief would be warranted. Some commenters urged the Treasury Department and the IRS to simplify and minimize section 6056 reporting generally and with respect to individual coverage HRAs.

The proposed regulations do not propose to amend the regulations under section 6056. It is anticipated that guidance regarding reporting in connection with individual coverage HRAs will be provided in other administrative guidance, including forms and instructions. It is also anticipated that the guidance would permit the reporting of the employee's required contribution based on the section 4980H safe harbor(s) used by the ALE, rather than the employee's required contribution determined under the final PTC regulations without application of the relevant safe harbors. The Treasury Department and the IRS continue to consider whether and how to revise the codes used in Form 1095–C reporting to account for the new individual coverage HRA safe harbors. The Treasury Department and the IRS recognize the need for timely guidance in this area to assist taxpayers, plan administrators, and software developers to prepare for the reporting associated with individual coverage HRAs.

b. Section 6055

Section 6055 provides that all persons who provide MEC to an individual must report certain information to the IRS that identifies covered individuals and the period of coverage, and must furnish a statement to the covered individuals including the same information. Information returns under section 6055 generally are filed using Form 1095–B, ''Health Coverage.'' However, self-insured ALEs are required to file Form 1095–C and use Part III of that form, rather than Form 1095–B, to report information required under section 6055.

Individual coverage HRAs are group health plans and, therefore, are eligible employer-sponsored plans that are MEC. Accordingly, reporting under section 6055 is required for individual coverage HRAs. In general, the employer is the entity responsible for this reporting.[56]

The Treasury Department and the IRS note that there are regulations under § 1.6055–1(d) that provide exceptions for certain plans from the section 6055 reporting requirements.[57] These regulations include exceptions for certain duplicative coverage or supplemental coverage providing MEC. More specifically, the regulations provide that: (1) If an individual is covered by more than one MEC plan or program provided by the same reporting entity, reporting is required for only one of the plans or programs; and (2) reporting is not required for an individual's MEC to the extent that the individual is eligible for that coverage only if the individual is also covered by other MEC for which section 6055 reporting is required, but for eligible employer-sponsored coverage this exception only applies if the supplemental coverage is offered by the same employer that offers the eligible employer-sponsored coverage for which section 6055 reporting is required.[58] Although an individual enrolled in an individual coverage HRA is required to be enrolled in individual health insurance coverage, Medicare Part A and B, or Medicare Part C, the employer providing the individual coverage HRA generally is not the same entity that provides the individual health insurance coverage. Accordingly, these section 6055 exceptions generally do not apply to individual coverage HRAs.

The proposed regulations do not propose to amend the regulations under section 6055. However, the Treasury Department and the IRS note that because the individual shared responsibility payment under section 5000A was reduced to zero for months beginning after December 31, 2018, the Treasury Department and the IRS are studying whether and how the reporting requirements under section 6055 should change, if at all, for future years.

8. Application of Tobacco Surcharge and Wellness Incentives to Affordability Determination

One commenter noted that whether an individual is a tobacco user can have an impact on premiums for individual health insurance coverage. This commenter requested that the Treasury Department and the IRS permit employers to use the non-tobacco rate in determining affordability for purposes of the PTC and section 4980H.

In response, and consistent with current related guidance,[59] the final PTC regulations provide that for purposes of determining the premium for the lowest cost silver plan used to determine the employee's required HRA contribution: (1) If the premium differs for tobacco users and non-tobacco users, the premium taken into account is the premium that applies to non-tobacco users; and (2) the premium is determined without regard to any wellness program incentive that affects premiums unless the wellness program incentive relates exclusively to tobacco use, in which case the incentive is treated as earned.[60] The proposed regulations incorporate these rules by reference for purposes of determining the affordability plan and the associated premium.

9. Implementation of Section 4980H Safe Harbors and Reliance on Exchange Information

A number of commenters requested that the Treasury Department and the IRS ensure that employers have access to the information needed to apply section 4980H to individual coverage HRAs. Some commenters asked for an online affordability calculator and for lowest cost silver plan data to be made available by zip code, for each month, and to be retained historically, for use by employers and the IRS.

The Treasury Department and the IRS recognize that access to location-specific lowest cost silver plan premium data, on a month-by-month basis, which is preserved and includes prior year information, is necessary for employers to use the safe harbors included in the proposed regulations. As noted in the preamble to the final integration regulations, lowest cost silver plan data will be made available by HHS for employers in all states that use the Federal *HealthCare.gov* platform to determine whether the individual coverage HRA offer is affordable for purposes of section 4980H, and the Treasury Department and the IRS are working with HHS to ensure that the necessary information is made available. With regard to states that do not use the Federal *HealthCare.gov* platform (State Exchanges), HHS has begun discussing the information it plans to make available in order to help the State Exchanges prepare to make this information available, and the Treasury Department and the IRS also intend to

[56] Section 1.6055–1(c)(2).

[57] See § 1.6055–1(d)(2). See also Prop. Reg. § 1.6055–1(d)(2) and (3), in 81 FR 50671 (Aug. 2, 2016) (these regulations may be relied upon for calendar years ending after December 31, 2013) and Notice 2015–68, 2015–41 IRB 547.

[58] Prop. Reg. § 1.6055–1(d)(2) and (3). *Id.*

[59] See §§ 1.36B–2(c)(3)(v)(A)(*4*) and 1.36B–3(e).

[60] Section 1.36B–2(c)(5)(iii)(A). See 84 FR 28888 (June 20, 2019), 28496–28497.

work with State Exchanges on this aspect of implementation.

Further, the Treasury Department and the IRS recognize that employers are not in a position to verify whether the lowest cost silver plan premium information posted by an Exchange for this purpose has been properly computed and identified, and, therefore, employers will need to be able to rely on the premium information that Exchanges make available. Accordingly, the proposed regulations provide that ALEs may rely on the lowest cost silver plan premium information made available by an Exchange for purposes of determining affordability under section 4980H. Employers are encouraged to retain relevant records.[61]

10. Other Comments Related to Section 4980H

One commenter requested clarification that the offer of an individual coverage HRA is an offer of coverage for purposes of section 4980H, even if the individual offered the individual coverage HRA does not take the HRA or enroll in individual health insurance coverage. To avoid an employer shared responsibility payment, section 4980H requires an ALE to offer its full-time employees (and their dependents) an opportunity to enroll in an eligible employer-sponsored plan. Section 4980H does not require that the full-time employees (or their dependents) actually enroll, in order for the employer to avoid an employer shared responsibility payment. Moreover, as group health plans, individual coverage HRAs are eligible employer-sponsored plans. Therefore, the Treasury Department and the IRS confirm, for the sake of clarity, that the offer of an individual coverage HRA is an offer of an eligible employer-sponsored plan for purposes of section 4980H, without regard to whether the employee accepts the offer. The proposed regulations do not affect existing guidance with respect to this issue.

One commenter requested clarification that, for purposes of section 4980H, an employer that offers an individual coverage HRA will be treated as offering the HRA to Medicare-enrolled and Medicare-eligible employees, even if those employees are unable to obtain individual health insurance coverage on account of their Medicare status. Under section 4980H and the regulations thereunder, in general, an employer is considered to offer coverage to an employee if the employee has an effective opportunity to elect to enroll in coverage at least once with respect to the plan year.[62] Whether an employee has an effective opportunity to enroll is determined based on all the relevant facts and circumstances. Further, under the final integration regulations, an individual coverage HRA may be integrated with Medicare Part A and B or Medicare Part C; therefore, an employee enrolled in Medicare may enroll in the HRA, even though the employee may not be able to obtain individual health insurance coverage due to his or her status as a Medicare enrollee.[63] Thus, if a particular individual coverage HRA may be integrated with Medicare, the offer of the HRA to an employee who is enrolled in Medicare provides the employee an effective opportunity to enroll in the HRA and constitutes an offer of coverage to the employee for purposes of section 4980H. As a result, the offer is taken into account in determining if the ALE offered coverage to a sufficient number of full-time employees (and their dependents) for purposes of avoiding an employer shared responsibility payment under section 4980H(a). In addition, because an individual enrolled in Medicare is not eligible for the PTC[64] and an ALE will only be liable for an employer shared responsibility payment for a month with respect to a full-time employee under section 4980H(b) if the full-time employee is allowed the PTC for that month, an ALE will not be liable for an employer shared responsibility payment under section 4980H(b) for a month with respect to a full-time employee enrolled in Medicare for that month.[65]

Some commenters inquired about the interaction between section 4980H and an offer of an excepted benefit HRA,[66] including the consequences to an ALE if the excepted benefit HRA is used to purchase short-term, limited-duration insurance (STLDI). Among other requirements, in order for an ALE to avoid an employer shared responsibility payment, it must offer an eligible employer-sponsored plan that is MEC to its full-time employees (and their dependents). Although group health plans generally are eligible employer-sponsored plans that are MEC, excepted benefits are not MEC.[67] Consequently, the offer of an excepted benefit HRA is not treated as an offer of an eligible employer-sponsored plan that is MEC for purposes of section 4980H, regardless of whether the excepted benefit HRA is, or may be, used to purchase STLDI.

However, in order for an HRA to be an excepted benefit HRA, the employer must offer the employees who are offered the excepted benefit HRA other group health plan coverage that is not limited to excepted benefits and that is not an HRA or other account-based group health plan.[68] Because the other group health plan may not be limited to excepted benefits, that offer of coverage is an offer of an eligible employer-sponsored plan that is MEC for purposes of section 4980H. Whether the offer of coverage under the other group health plan in connection with the excepted benefit HRA is an affordable, MV offer depends on the particular characteristics of the group health plan and the coverage offered under that plan. The proposed regulations do not affect existing guidance with respect to this issue.

B. Proposed Regulations Under Section 105(h)

Under the final integration regulations, employers may limit the offer of an individual coverage HRA to certain classes of employees and may vary the amounts, terms, and conditions of individual coverage HRAs between the different classes of employees.[69] Further, within any class of employees offered an individual coverage HRA, the employer must offer the HRA on the same terms and conditions to all employees in the class, subject to certain exceptions (the same terms requirement).[70] One of the exceptions to the same terms requirement is that the employer may increase the maximum dollar amounts made available under an individual coverage HRA as the age of the participant increases provided that (1) the same maximum dollar amount attributable to the increase in age is made available to all participants in a class of employees who are the same age, and (2) the maximum dollar amount made available to the oldest participant(s) is not more than three times the maximum dollar amount

[61] The regulations under section 4980H do not include specific recordkeeping requirements; the otherwise generally applicable substantiation and recordkeeping requirements in section 6001 apply.

[62] See § 54.4980H–4(b)(1). The regulations also provide guidance on the circumstances in which an employer is considered to have made an offer of coverage even if the employee does not have an effective opportunity to decline to enroll in the coverage.

[63] See 84 FR 28888 (June 20, 2019), 28928–28931.

[64] See section 36B(c)(2)(B) and § 1.36B–2(a)(2).

[65] The rules under section 4980H for employees eligible for, but not enrolled in, Medicare apply as they do for non-Medicare-eligible employees. However, note that an individual eligible for Medicare generally is ineligible for the PTC. See id.

[66] See § 54.9831–1(c)(3)(viii).

[67] See section 5000A(f)(3).

[68] See § 54.9831–1(c)(3)(viii)(A).

[69] See § 54.9802–4(d).

[70] See § 54.9802–4(c)(3).

made available to the youngest participant(s).[71] Other exceptions to the same terms requirement include rules allowing the employer to prorate amounts made available for employees and dependents who enroll in the HRA after the beginning of the HRA plan year, to make available carryover amounts, and for employees with amounts remaining in other HRAs, to make available those remaining amounts in the current individual coverage HRA, each subject to the conditions set forth in the final integration regulations.[72]

As explained earlier in this preamble, HRAs, including individual coverage HRAs, generally are subject to section 105(h) and the regulations thereunder.[73] Further, the regulations under section 105(h) provide that ''any maximum limit attributable to employer contributions must be uniform for all participants and for all dependents of employees who are participants and may not be modified by reason of a participant's age or years of service.'' [74] In Notice 2018–88, the Treasury Department and the IRS explained that varying the maximum amounts made available under an individual coverage HRA for different classes of employees would conflict with the requirement in § 1.105–11(c)(3)(i) that any maximum limit attributable to employer contributions must be uniform for all participants and that, without further guidance, certain amounts paid to an HCI under an individual coverage HRA that implements an age-based increase would be includible in the income of the HCI because the HRA would fail to satisfy the requirement in § 1.105–11(c)(3)(i) that prohibits the maximum limit attributable to employer contributions to the HRA from being modified by reason of a participant's age.

To facilitate the offering of individual coverage HRAs, Notice 2018–88 described a potential safe harbor under which an individual coverage HRA would be treated as not failing to satisfy the nondiscrimination requirement in § 1.105–11(c)(3)(i) that prohibits the maximum limit attributable to employer contributions from being modified by reason of a participant's age. Specifically, Notice 2018–88 described a potential safe harbor under which the HRA would be treated as not failing to satisfy this requirement if it provided that the maximum dollar amount made available to employees who are members of a particular class of employees increases in accordance with the increases in the price of an individual health insurance coverage policy in the relevant individual insurance market based on the ages of the employees who are members of that class of employees, and further provided that the same maximum dollar amount attributable to the increase in age would be made available to all employees who are members of that class of employees who are the same age. Notice 2018–88 also stated that the Treasury Department and the IRS anticipated that future guidance would provide that an individual coverage HRA would be treated as not failing to satisfy the more general requirement in § 1.105–11(c)(3)(i) that any maximum limit attributable to employer contributions must be uniform for all participants, if the HRA provides the same maximum dollar amount to all employees who are members of a particular class of employees, limited to the classes specified in the proposed integration regulations, and subject to the exceptions allowed under the same terms requirement.

Commenters generally supported the potential section 105(h) safe harbors, but some commenters requested clarification as to how the potential section 105(h) safe harbors would function in practice, and commenters requested examples.[75]

In light of the final integration regulations, and for the reasons described in Notice 2018–88 and earlier in this section of the preamble, it continues to be the case that safe harbors are needed under the section 105(h) regulations to facilitate the offering of individual coverage HRAs. However, with respect to age variance, instead of proposing the anticipated safe harbor set forth in Notice 2018–88, to minimize the complexity and employer burden in complying with multiple regulatory requirements, the proposed regulations provide that an individual coverage HRA that satisfies the age variation exception under the same terms requirement at § 54.9802–4(c)(3)(iii)(B) will not be treated as failing to satisfy the requirements to provide nondiscriminatory benefits under § 1.105–11(c)(3)(i) solely due to the variation based on age. More generally, and as anticipated in Notice 2018–88, the proposed regulations also provide that if the maximum dollar amount made available varies for participants within a class of employees, or varies between classes of employees, then with respect to that variance, the individual coverage HRA does not violate the requirement in § 1.105–11(c)(3)(i) that any maximum limit attributable to employer contributions must be uniform for all participants, if within each class of employees, the maximum dollar amount only varies in accordance with the same terms requirement and, with respect to differences in the maximum dollar amount made available for different classes of employees, the classes of employees are classes of employees set forth in § 54.9802–4(d).

Nonetheless, the Treasury Department and the IRS note that satisfying the terms of the safe harbors under the proposed regulations does not automatically satisfy the prohibition on nondiscriminatory operation under § 1.105–11(c)(3)(ii). Thus, among other situations, if a disproportionate number of HCIs qualify for and utilize the maximum HRA amount allowed under the same terms requirement based on age in comparison to the number of non-HCIs who qualify for and use lower HRA amounts based on age, the individual coverage HRA may be found to be discriminatory, with the result that excess reimbursements of the HCIs will be included in their income.[76]

C. Application of Section 125 Cafeteria Plan Rules to Arrangements Involving Individual Coverage HRAs

The preamble to the proposed and final HRA integration regulations noted that some employers may want to allow employees to pay the portion of the premium for individual health insurance coverage that is not covered by an individual coverage HRA, if any, through a salary reduction arrangement under a section 125 cafeteria plan. Pursuant to section 125(f)(3), an employer generally may not provide a qualified health plan purchased through

[71] Section 54.9802–4(c)(3)(iii)(B). The proposed integration regulations included the same terms requirement, including the exception for age variation, but did not include the limit on the extent to which amounts made available may be increased based on age, which was added to the final integration regulations in response to comments. See 84 FR 28888 (June 20, 2019), 28904–28907.

[72] Section 54.9802–4(c)(3)(ii) and (v).

[73] As noted earlier in this preamble, an HRA that, by its terms, only reimburses premiums for individual health insurance coverage is not subject to section 105(h) (see § 1.105–11(b)(2)). Further, section 105(h) and the regulations thereunder, including these proposed regulations, are only relevant to an individual coverage HRA offered to one or more HCIs and are not relevant for an individual coverage HRA that is not offered to any HCI.

[74] See § 1.105–11(c)(3)(i).

[75] Some commenters addressed the ability to vary individual coverage HRA amounts by age for purposes of integration of HRAs with individual health insurance coverage, and a full response to those comments is included in the preamble to the final integration regulations. See 84 FR 28888 (June 20, 2019), 28904–28907.

[76] See § 1.105–11(c)(3).

an Exchange as a benefit under its cafeteria plan. Therefore, an employer may not permit employees to make salary reduction contributions to a cafeteria plan to purchase a qualified health plan (including individual health insurance coverage) offered through an Exchange. However, section 125(f)(3) does not apply to individual health insurance coverage that is not offered through an Exchange (referred to as ''off Exchange''). Therefore, for an employee who purchases off-Exchange individual health insurance coverage, the employer may permit the employee to pay the balance of the premium for the coverage through its cafeteria plan. The Treasury Department and the IRS appreciate the comments received on this topic in response to the proposed integration regulations and request additional comments regarding any specific issues raised by the application of the section 125 cafeteria plan rules to arrangements involving individual coverage HRAs for which clarification is needed or for which a modification of the applicable rules may decrease burdens.

Some commenters in response to the proposed integration regulations requested that individuals be allowed to use a cafeteria plan to pay premiums for qualified health plans offered through an Exchange with salary reduction. As discussed in the preceding paragraph, section 125(f)(3) prohibits using a cafeteria plan to allow employees to pay premiums for a qualified health plan offered through an Exchange.

Proposed Applicability Date

The proposed regulations under section 4980H are proposed to apply for periods beginning after December 31, 2019, and the proposed regulations under section 105(h) are proposed to apply for plan years beginning after December 31, 2019. The Treasury Department and the IRS recognize that employers may want to offer individual coverage HRAs beginning on January 1, 2020, and, therefore, may need applicable guidance with respect to sections 4980H and/or 105(h) to design and implement programs involving individual coverage HRAs prior to the issuance of any final regulations and in advance of the plan year for which the individual coverage HRAs will be offered. Accordingly, taxpayers may rely on the proposed regulations under section 4980H for periods during any plan year of individual coverage HRAs beginning before the date that is six months following the publication of any final regulations, and taxpayers may rely on the proposed regulations under section 105(h) for plan years of individual coverage HRAs beginning before the date that is six months following the publication of any final regulations.

Statutory Authority

The regulations are proposed to be adopted pursuant to the authority contained in sections 7805 and 9833.

Special Analyses

This regulation is not subject to review under section 6(b) of Executive Order 12866 pursuant to the Memorandum of Agreement (April 11, 2018) between the Department of the Treasury and the Office of Management and Budget regarding review of tax regulations. Because this regulation does not impose a collection of information on small entities, the Regulatory Flexibility Act (5 U.S.C. chapter 6) does not apply. Pursuant to section 7805(f) of the Internal Revenue Code, this regulation has been submitted to the Chief Counsel for Advocacy of the Small Business Administration for comment on its impact on small business.

Comments and Requests for Public Hearing

The Treasury Department and the IRS request comments on all aspects of the proposed regulations. Before the proposed regulations are adopted as final regulations, consideration will be given to any comments that are submitted timely to the IRS as prescribed in this preamble under the **ADDRESSES** heading. All comments will be available at *https://www.regulations.gov.* A public hearing will be scheduled if requested in writing by any person that timely submits written comments. If a public hearing is scheduled, then notice of the date, time, and place for the public hearing will be published in the **Federal Register**.

Drafting Information

The principal author of the proposed regulations is Jennifer Solomon of the Office of Associate Chief Counsel (Employee Benefits, Exempt Organizations, and Employment Taxes). However, other personnel from the Treasury Department and the IRS participated in the development of the proposed regulations.

Statement of Availability of IRS Documents

The Notices cited in this document are published in the Internal Revenue Bulletin (or Cumulative Bulletin) and are available from the Superintendent of Documents, U.S. Government Publishing Office, Washington, DC 20402, or by visiting the IRS website at *http://www.irs.gov.*

List of Subjects

26 CFR Part 1

Income taxes, Reporting and recordkeeping requirements.

26 CFR Part 54

Excise taxes, Health care, Health insurance, Pensions, Reporting and recordkeeping requirements.

Proposed Amendments to the Regulations

Accordingly, 26 CFR parts 1 and 54 are proposed to be amended as follows:

PART 1—INCOME TAXES

■ **Paragraph 1.** The authority citation for part 1 continues to read in part as follows:

Authority: 26 U.S.C. 7805 * * *

■ **Par. 2.** Section 1.105–11 is amended by revising paragraphs (c)(3)(i) and (j) to read as follows:

§ 1.105–11 Self-insured medical reimbursement plan.

* * * * *

(c) * * *

(3) * * *

(i) *In general*—(A) *Benefits.* In general, benefits subject to reimbursement under a plan must not discriminate in favor of highly compensated individuals. Plan benefits will not satisfy the requirements of this paragraph (c)(3)(i)(A) unless all the benefits provided for participants who are highly compensated individuals are provided for all other participants. In addition, all the benefits available for the dependents of employees who are highly compensated individuals must also be available on the same basis for the dependents of all other employees who are participants. A plan that provides optional benefits to participants will be treated as providing a single benefit with respect to the benefits covered by the option provided that all eligible participants may elect any of the benefits covered by the option and there are either no required employee contributions or the required employee contributions are the same amount. This test is applied to the benefits subject to reimbursement under the plan rather than the actual benefit payments or claims under the plan. The presence or absence of such discrimination will be determined by considering the type of benefit subject to reimbursement provided highly compensated individuals, as well as the amount of the benefit subject to reimbursement.

(B) *Maximum limits*—(*1*) *Uniformity rule.* A plan may establish a maximum limit for the amount of reimbursement which may be paid a participant for any single benefit, or combination of benefits. However, except as otherwise provided in paragraph (c)(3)(i)(B)(*2*) of this section, any maximum limit attributable to employer contributions must be uniform for all participants and for all dependents of employees who are participants and may not be modified by reason of a participant's age or years of service.

(*2*) *Exception to uniformity rule.* With respect to an individual coverage HRA, as defined in § 54.9802–4(b) of this chapter, if the maximum dollar amount made available varies for participants within a class of employees set forth in § 54.9802–4(d) of this chapter, or varies between classes of employees offered the individual coverage HRA, the plan does not violate the requirements of this paragraph (c)(3) by virtue of that variance; provided that, within a class of employees, the maximum dollar amount made available varies only in accordance with the same terms requirement set forth in § 54.9802–4(c)(3) of this chapter, and, with respect to differences in the maximum dollar amount made available for different classes of employees, each of the classes of employees is one of the classes of employees set forth in § 54.9802–4(d) of this chapter. Specifically, with respect to age-based variances, in the case of an individual coverage HRA, if the maximum dollar amount made available to participants who are members of a particular class of employees increases based on the age of each participant and the increases in the maximum dollar amount comply with the age-variation rule under the same terms requirement set forth under § 54.9802–4(c)(3)(iii)(B) of this chapter, the plan does not violate the requirements of this paragraph (c)(3) with respect to those increases.

(C) *Reference to employee compensation.* If a plan covers employees who are highly compensated individuals, and the type or the amount of benefits subject to reimbursement under the plan are in proportion to employee compensation, the plan discriminates as to benefits.

* * * * *

(j) *Applicability date.* Section 105(h) and this section, except for paragraph (c)(3)(i)(B)(*2*) of this section, are applicable for taxable years beginning after December 31, 1979 and for amounts reimbursed after December 31, 1979. In determining plan discrimination and the taxability of excess reimbursements made for a plan year beginning in 1979 and ending in 1980, a plan's eligibility and benefit requirements as well as actual reimbursements made in the plan year during 1979, will not be taken into account. In addition, this section does not apply to expenses which are incurred in 1979 and paid in 1980. Paragraph (c)(3)(i)(B)(*2*) of this section is applicable for plan years beginning after December 31, 2019.

* * * * *

PART 54—PENSION EXCISE TAXES

■ **Par. 3.** The authority citation for part 54 continues to read in part as follows:

Authority: 26 U.S.C. 7805 * * *

§ 54.4980H–4 [Amended]

■ **Par. 4.** Section 54.4980H–4 is amended by removing ''9.5 percent of'' and adding in its place ''the product of the required contribution percentage (as defined in § 1.36B–2(c)(3)(v)(C) of this chapter) and'' in the first sentence of paragraph (b)(1).

■ **Par. 5.** Section 54.4980H–5 is amended by:

■ a. Revising paragraph (e)(2) introductory text;

■ b. In paragraph (e)(2)(i):

■ i. Removing ''an'' and adding in its place ''a general'' in the heading; and

■ ii. Removing ''affordability'' and adding in its place ''general affordability'' in the first sentence;

■ c. Removing ''9.5 percent of'' and adding in its place ''the product of the required contribution percentage (as defined in § 1.36B–2(c)(3)(v)(C)) and'' in the first sentence of paragraphs (e)(2)(ii)(A) and (B), the first and second sentences of paragraph (e)(2)(iii), and the first sentence of paragraph (e)(2)(iv);

■ d. In paragraph (e)(2)(v):

■ i. Adding a sentence to the end of the introductory text; and

■ ii. Designating *Examples 1* through *6* as paragraphs (e)(2)(v)(A) through (F), respectively;

■ e. In newly designated paragraphs (e)(2)(v)(A) through (F), redesignating the paragraphs in the first column as the paragraphs in the second column:

Old paragraphs	New paragraphs
(e)(2)(v)(A)(i) and (ii)	(e)(2)(v)(A)(*1*) and (*2*).
(e)(2)(v)(B)(i) and (ii)	(e)(2)(v)(B)(*1*) and (*2*).
(e)(2)(v)(C)(i) and (ii)	(e)(2)(v)(C)(*1*) and (*2*).
(e)(2)(v)(D)(i) and (ii)	(e)(2)(v)(D)(*1*) and (*2*).
(e)(2)(v)(E)(i) and (ii)	(e)(2)(v)(E)(*1*) and (*2*).
(e)(2)(v)(F)(i) and (ii)	(e)(2)(v)(F)(*1*) and (*2*).

■ f. Redesignating paragraphs (f) and (g) as paragraphs (g) and (h), respectively;

■ g. Adding a new paragraph (f); and

■ h. Revising newly redesignated paragraph (h).

The revisions and additions read as follows:

§ 54.4980H–5 Assessable payments under section 4980H(b).

* * * * *

(e) * * *

(2) *Affordability safe harbors for section 4980H(b) purposes.* The affordability safe harbors set forth in paragraphs (e)(2)(ii) through (iv) of this section (general affordability safe harbors) apply solely for purposes of section 4980H(b), so that an applicable large employer member that offers minimum essential coverage providing minimum value will not be subject to an assessable payment under section 4980H(b) with respect to any employee receiving the applicable premium tax credit or cost-sharing reduction for a period for which the coverage is determined to be affordable under the requirements of a general affordability safe harbor. The preceding sentence applies even if the applicable large employer member's offer of coverage that meets the requirements of a general affordability safe harbor is not affordable for a particular employee under section 36B(c)(2)(C)(i) and § 1.36B–2(c)(3)(v) of this chapter, and an applicable premium tax credit or cost-sharing reduction is allowed or paid with respect to that employee. The general affordability safe harbors apply with respect to offers of minimum essential coverage other than the offer of an individual coverage HRA, as defined in paragraph (f)(7) of this section. Paragraph (f) of this section sets forth affordability and minimum value safe harbors that apply to the offer of an individual coverage HRA (individual coverage HRA safe harbors).

* * * * *

(v) * * * For purposes of simplicity, the examples in this paragraph (e)(2)(v) assume 9.5 percent is the required contribution percentage for 2015 and 2016, although the required contribution percentage in 2015 and 2016 was adjusted for those years pursuant to § 1.36B–2(c)(3)(v)(C) of this chapter.

* * * * *

(f) *Affordability and minimum value safe harbors for individual coverage HRAs*—(1) *In general.* Whether an offer of an individual coverage HRA is treated as affordable and providing minimum value, in general, is determined under § 1.36B–2(c)(3)(i)(B), (c)(3)(vi), and (c)(5) of this chapter. This paragraph (f) sets forth safe harbors that an applicable large employer member may use in determining whether an offer of an individual coverage HRA is affordable or provides minimum value for purposes of section 4980H(b), even if the offer of the individual coverage HRA

is not affordable or does not provide minimum value under § 1.36B–2(c)(3)(i)(B), (c)(3)(vi), and (c)(5) of this chapter. An applicable large employer member that offers an individual coverage HRA is not subject to an assessable payment under section 4980H(b) with respect to any full-time employee receiving the applicable premium tax credit or cost-sharing reduction for a period for which the individual coverage HRA is determined to be affordable and to provide minimum value applying the safe harbors provided in this paragraph (f). The preceding sentence applies even if the applicable large employer member's offer of an individual coverage HRA that is affordable and provides minimum value applying the safe harbors under this paragraph (f) is not affordable or does not provide minimum value for a particular employee under § 1.36B–2(c)(3)(i)(B), (c)(3)(vi), and (c)(5) of this chapter, and an applicable premium tax credit or cost-sharing reduction is allowed or paid with respect to that employee. To the extent not addressed in this paragraph (f), the rules under § 1.36B–2(c)(3)(i)(B), (c)(3)(vi), and (c)(5) of this chapter apply in determining whether an offer of an individual coverage HRA is affordable and provides minimum value for purposes of section 4980H(b). Further, an applicable large employer member may rely on information provided by an Exchange in determining whether the offer of an individual coverage HRA is affordable and provides minimum value. See paragraph (f)(7) of this section for definitions that apply to this paragraph (f), which are in addition to the definitions set forth in § 54.4980H–1(a).

(2) *Conditions of using an individual coverage HRA safe harbor.* An applicable large employer member may use one or more of the safe harbors described in this paragraph (f) only with respect to the full-time employees and their dependents to whom the applicable large employer member offered the opportunity to enroll in an individual coverage HRA. The safe harbors in this paragraph (f) apply only to the offer of an individual coverage HRA, but to the extent an applicable large employer member offers some full-time employees and their dependents an individual coverage HRA and other full-time employees and their dependents other coverage under an eligible employer-sponsored plan that provides minimum value with respect to the self-only coverage offered to the employee, the applicable large employer member may use the safe harbors under this paragraph (f) for the offers of the individual coverage HRA and the general affordability safe harbors under paragraph (e)(2) of this section for the offers of other coverage. Use of any of the safe harbors in this paragraph (f) is optional for an applicable large employer member, and an applicable large employer member may choose to apply the safe harbors for any class of employees (as defined in paragraph (f)(7) of this section), provided it does so on a uniform and consistent basis for all employees in the class of employees. Each of the safe harbors set forth in this paragraph (f) may be used in combination with the other safe harbors provided in this paragraph (f), subject to the conditions of the safe harbors.

(3) *Minimum value.* An individual coverage HRA that is affordable for a calendar month under § 1.36B–2(c)(5) of this chapter, taking into account any applicable safe harbors under this paragraph (f), is treated as providing minimum value for the calendar month, for purposes of section 4980H(b).

(4) *Look-back month safe harbor*—(i) *In general.* In determining an employee's required HRA contribution for a calendar month, for purposes of section 4980H(b), an applicable large employer member may use the monthly premium for the applicable lowest cost silver plan for the month specified in either paragraph (f)(4)(i)(A) or (B) of this section, as applicable (the look-back month):

(A) *Calendar year plan.* For an individual coverage HRA with a plan year that is the calendar year, an applicable large employer member may use the monthly premium for the applicable lowest cost silver plan for January of the prior calendar year.

(B) *Plan year that is not the calendar year.* For an individual coverage HRA with a plan year that is not the calendar year, an applicable large employer member may use the monthly premium for the applicable lowest cost silver plan for January of the current calendar year.

(ii) *Application of look-back month safe harbor to employee's current circumstances.* In determining the monthly premium for the applicable lowest cost silver plan based on the applicable look-back month, the applicable large employer member must use the employee's applicable age for the current plan year and the employee's applicable location for the current calendar month. In general, the applicable large employer member may use the monthly premium of the applicable lowest cost silver plan for the applicable look-back month for all calendar months of the plan year. However, to the extent the employee's applicable location changes during the plan year, although the applicable large employer member may continue to determine the monthly premium based on the applicable look-back month, the applicable large employer member must use the employee's new applicable location, in accordance with the rules set forth under paragraph (f)(6) of this section if applicable, to determine the applicable lowest cost silver plan used to determine the monthly premium.

(5) *Application of the general affordability safe harbors to individual coverage HRAs.* The general affordability safe harbors set forth in paragraphs (e)(2)(ii), (iii), and (iv) of this section may apply to an offer of an individual coverage HRA by an applicable large employer member to a full-time employee for purposes of section 4980H(b), subject to the modifications set forth in this paragraph (f)(5).

(i) *Form W–2 safe harbor applied to individual coverage HRAs.* An applicable large employer member satisfies the Form W–2 safe harbor of paragraph (e)(2)(ii) of this section with respect to an offer of an individual coverage HRA to an employee for a calendar year, or if applicable, part of a calendar year, if the individual coverage HRA is affordable under the Form W–2 safe harbor under paragraph (e)(2)(ii) of this section but substituting ''the employee's required HRA contribution, as determined taking into account any other safe harbors in paragraph (f) of this section, if applicable'' for each of the following phrases—''that employee's required contribution for the calendar year for the employer's lowest cost self-only coverage that provides minimum value'', ''the required employee contribution'', ''the employee's required contribution'', and ''the employee's required contribution for the employer's lowest cost self-only coverage that provides minimum value.''

(ii) *Rate of pay safe harbor applied to individual coverage HRAs.* An applicable large employer member satisfies the rate of pay safe harbor of paragraph (e)(2)(iii) of this section with respect to an offer of an individual coverage HRA to an employee for a calendar month if the individual coverage HRA is affordable under the rate of pay safe harbor of paragraph (e)(2)(iii) of this section but substituting ''the employee's required HRA contribution, as determined taking into account any other safe harbors in paragraph (f) of this section, if applicable,'' for ''the employee's required contribution for the calendar month for the applicable large employer

member's lowest cost self-only coverage that provides minimum value.''

(iii) *Federal poverty line safe harbor applied to individual coverage HRAs.* An applicable large employer member satisfies the Federal poverty line safe harbor of paragraph (e)(2)(iv) of this section with respect to an offer of an individual coverage HRA to an employee for a calendar month if the individual coverage HRA is affordable under the federal poverty line safe harbor of paragraph (e)(2)(iv) of this section but substituting ''the employee's required HRA contribution, as determined taking into account any other safe harbors in paragraph (f) of this section, if applicable,'' for ''the employee's required contribution for the calendar month for the applicable large employer member's lowest cost self-only coverage that provides minimum value.''

(6) *Location safe harbor*—(i) *In general.* For purposes of section 4980H(b), an applicable large employer member may determine an employee's required HRA contribution for a calendar month based on the cost of the applicable lowest cost silver plan for the location of the employee's primary site of employment.

(ii) *Primary site of employment*—(A) *In general.* An employee's primary site of employment generally is the location at which the applicable large employer member reasonably expects the employee to perform services on the first day of the plan year (or on the first day the individual coverage HRA may take effect, for an employee who is not eligible for the individual coverage HRA on the first day of the plan year). However, the employee's primary site of employment is treated as changing if the location at which the employee performs services changes and the employer expects the change to be permanent or indefinite; in that case, in general, the employee's primary site of employment is treated as changing no later than the first day of the second calendar month after the employee has begun performing services at the new location. Nonetheless, if an applicable large employer member is first offering an individual coverage HRA to a class of employees, and the change in location occurs prior to the individual coverage HRA's initial plan year, the employee's primary site of employment is treated as changing no later than the later of the first day of the plan year or the first day of the second calendar month after the employee has begun performing services at the new location.

(B) *Remote workers.* In the case of an employee who regularly performs services from home or another location that is not on the applicable large employer member's premises, but who may be required by his or her employer to work at, or report to, a particular location, such as a teleworker with an assigned office space or available workspace at a particular location to which he or she may be required to report, the location to which the employee would report to provide services if requested is the primary site of employment. In the case of an employee who works remotely from home or at another location that is not on the premises of the applicable large employer member and who otherwise does not have an assigned office space or a particular location to which to report, the employee's residence is the primary site of employment.

(7) *Definitions.* The definitions in this paragraph (f)(7) apply for purposes of this paragraph (f).

(i) *Applicable age.* For an employee who is or will be eligible for an individual coverage HRA on the first day of the plan year, the employee's applicable age for the plan year is the employee's age on the first day of the plan year. For an employee who becomes eligible for an individual coverage HRA during the plan year, the employee's applicable age for the remainder of the plan year is the employee's age on the date the individual coverage HRA can first become effective with respect to the employee.

(ii) *Applicable location.* An employee's applicable location is where the employee resides for the calendar month, or, if the applicable large employer member is applying the location safe harbor under paragraph (f)(6) of this section, the employee's primary site of employment for the calendar month.

(iii) *Applicable lowest cost silver plan*—(A) *In general.* The applicable lowest cost silver plan for an employee for a calendar month generally is the lowest cost silver plan for self-only coverage of the employee offered through the Exchange for the employee's applicable location for the month.

(B) *Different lowest cost silver plans in different parts of the same rating area.* If there are different lowest cost silver plans in different parts of a rating area, an employee's applicable lowest cost silver plan is the lowest cost silver plan in the part of the rating area in which the employee's applicable location is located.

(C) *Lowest cost silver plan identified for use for employees of all ages.* The applicable lowest cost silver plan for an employee is the lowest cost silver plan for the lowest age band in the individual market for the employee's applicable location.

(iv) *Class of employees.* A class of employees means a class of employees as set forth in § 54.9802–4(d)(2).

(v) *Individual coverage HRA.* An individual coverage HRA means an individual coverage HRA as set forth in § 54.9802–4.

(vi) *Required contribution percentage.* Required contribution percentage means the required contribution percentage as defined in § 1.36B–2(c)(3)(v)(C) of this chapter.

(vii) *Required HRA contribution.* In general, the required HRA contribution means the required HRA contribution as defined in § 1.36B–2(c)(5)(ii) of this chapter. However, for purposes of the safe harbors set forth in this paragraph (f), the required HRA contribution is determined based on the applicable lowest cost silver plan as defined in paragraph (f)(7)(iii) of this section and the monthly premium for the applicable lowest cost silver plan is determined based on the employee's applicable age, as defined in paragraph (f)(7)(i) of this section, and the employee's applicable location, as defined in paragraph (f)(7)(ii) of this section.

(8) *Examples.* The following examples illustrate the application of the safe harbors under this paragraph (f) to applicable large employer members that offer an individual coverage HRA to at least some of their full-time employees.

(i) *Example 1 (Location safe harbor and look-back month safe harbor applied to calendar-year individual coverage HRA)*—(A) *Facts.* For 2020, Employer Y offers all full-time employees and their dependents an individual coverage HRA with a calendar-year plan year and makes $6,000 available in the HRA for the 2020 calendar-year plan year to each full-time employee without regard to family size, which means the monthly HRA amount for each full-time employee is $500. All of Employer Y's employees have a primary site of employment in City A. Employer Y chooses to use the location safe harbor and the look-back month safe harbor. Employer Y also chooses to use the rate of pay safe harbor for its full-time employees. Employee M is 40 years old on January 1, 2020, the first day of the plan year. The monthly premium for the applicable lowest cost silver plan for a 40 year old offered through the Exchange in City A for January 2019 is $600. Employee M's required HRA contribution for each month of 2020 is $100 (cost of the applicable lowest cost silver plan determined under the location safe harbor and the look-back month safe harbor ($600) minus the monthly HRA amount ($500)). The monthly amount determined under the rate of pay safe harbor for Employee M is $2,000 for each month in 2020.

(B) *Conclusion.* Employer Y has made an offer of affordable, minimum value coverage to Employee M for purposes of section

4980H(b) for each month of 2020 because Employee M's required HRA contribution ($100) is less than the amount equal to the required contribution percentage for 2020 multiplied by the monthly amount determined under the rate of pay safe harbor for Employee M (9.78 percent of $2,000 = $196). Employer Y will not be liable for an assessable payment under section 4980H(b) with respect to Employee M for any calendar month in 2020. (Also, Employer Y will not be liable for an assessable payment under section 4980H(a) for any calendar month in 2020 because it offered an individual coverage HRA, an eligible employer-sponsored plan that is minimum essential coverage, to all full-time employees and their dependents for each calendar month in 2020.)

(ii) *Example 2 (Location safe harbor and look-back month safe harbor applied to non-calendar year individual coverage HRA)*—(A) *Facts.* Employer Z offers all full-time employees and their dependents an individual coverage HRA with a non-calendar year plan year of July 1, 2020 through June 30, 2021, and makes $6,000 available in the HRA for the plan year to each full-time employee without regard to family size, which means the monthly HRA amount for each full-time employee is $500. All of Employer Z's employees have a primary site of employment in City B. Employer Z chooses to use the location safe harbor and the look-back month safe harbor. Employer Z also chooses to use the rate of pay safe harbor for its full-time employees. Employee N is 40 years old on July 1, 2020, the first day of the plan year. The monthly premium for the applicable lowest cost silver plan for a 40 year old offered through the Exchange in City B for January 2020 is $600. Employee N's required HRA contribution for each month of the plan year beginning July 1, 2020, is $100 (cost of the applicable lowest cost silver plan determined under the location safe harbor and the look-back month safe harbor ($600) minus the monthly HRA amount ($500)). The monthly amount determined under the rate of pay safe harbor for Employee N is $2,000 for each month of the plan year beginning July 1, 2020.

(B) *Conclusion.* Employer Z has made an offer of affordable, minimum value coverage to Employee N for purposes of section 4980H(b) for each month of the plan year beginning July 1, 2020, because Employee N's required HRA contribution ($100) is less than the amount equal to the required contribution percentage for plan years beginning in 2020 multiplied by the monthly amount determined under the rate of pay safe harbor for Employee N (9.78 percent of $2,000 = $196). Employer Z will not be liable for an assessable payment under section 4980H(b) with respect to Employee N for any calendar month in the plan year beginning July 1, 2020. (Also, Employer Z will not be liable for an assessable payment under section 4980H(a) for any calendar month in the plan year beginning July 1, 2020, because it offered an individual coverage HRA, an eligible employer-sponsored plan that is minimum essential coverage, to all full-time employees and their dependents for each calendar month in that plan year.)

* * * * *

(h) *Applicability date.* Paragraphs (a) through (e) and (g) of this section are applicable for periods after December 31, 2014. Paragraph (f) of this section is applicable for periods after December 31, 2019.

Kirsten Wielobob,

Deputy Commissioner for Services and Enforcement.

[FR Doc. 2019–20034 Filed 9–27–19; 8:45 am]

BILLING CODE 4830–01–P

PENSION BENEFIT GUARANTY CORPORATION

29 CFR Part 4022

RIN 1212–AB41

Lump Sum Payment Assumptions

AGENCY: Pension Benefit Guaranty Corporation.

ACTION: Proposed rule.

SUMMARY: This proposed rule would modify the assumptions the Pension Benefit Guaranty Corporation (PBGC) uses to determine de minimis lump sum benefits in PBGC-trusteed terminated single-employer defined benefit pension plans and would discontinue monthly publication of PBGC's lump sum interest rate assumption.

DATES: Comments must be submitted on or before November 29, 2019 to be assured of consideration.

ADDRESSES: Comments may be submitted by any of the following methods:

- *Federal eRulemaking Portal: https://www.regulations.gov.* Follow the instructions for sending comments.
- *Email: reg.comments@pbgc.gov.* Refer to RIN 1212–AB41 in the subject line.
- *Mail or Hand Delivery:* Regulatory Affairs Division, Office of the General Counsel, Pension Benefit Guaranty Corporation, 1200 K Street NW, Washington, DC 20005–4026.

All submissions must include the agency's name (Pension Benefit Guaranty Corporation or PBGC) and the Regulation Identifier Number for this rulemaking (RIN 1212–AB41). Comments received will be posted without change to PBGC's website, *https://www.pbgc.gov,* including any personal information provided. Copies of comments may also be obtained by writing to Disclosure Division, Office of the General Counsel, Pension Benefit Guaranty Corporation, 1200 K Street NW, Washington, DC 20005–4026, or calling 202–326–4040 during normal business hours. TTY users may call the Federal relay service toll-free at 1–800–877–8339 and ask to be connected to 202–326–4040.

FOR FURTHER INFORMATION CONTACT: Gregory Katz (*katz.gregory@pbgc.gov*), Attorney, Regulatory Affairs Division, Office of the General Counsel, Pension Benefit Guaranty Corporation, 1200 K Street NW, Washington, DC 20005–4026; 202–326–4400, extension 3829. TTY users may call the Federal relay service toll-free at 1–800–877–8339 and ask to be connected to 202–326–4400 extension 3829.

SUPPLEMENTARY INFORMATION:

Executive Summary—Purpose and Authority

This rulemaking arises from PBGC's ongoing review of its regulations to ensure they are up-to-date, efficient, and satisfy existing needs with a minimum of burden. It is intended to modernize the methodology used to determine de minimis lump sums in terminated underfunded single-employer plans. Specifically, under this proposed rule, PBGC would adopt the interest and mortality assumptions from section 417(e)(3) of the Internal Revenue Code (Code) [1] for this purpose.

It would also discontinue PBGC's monthly calculation and publication of the interest rates used for this purpose. Because some private-sector plans use PBGC's lump sum interest rates, the proposal would provide a final interest rate set for private-sector plans to use for valuation dates on or after the effective date of the final rule.

Legal authority for this action comes from section 4002(b)(3) of the Employee Retirement Income Security Act of 1974 (ERISA), which authorizes PBGC to issue regulations to carry out the purposes of title IV of ERISA and section 4022 of ERISA (Single-Employer Plan Benefits Guaranteed).

Background

Use of Lump Sum Assumptions by PBGC

The Pension Benefit Guaranty Corporation (PBGC) administers two insurance programs for private-sector defined benefit pension plans under title IV of the Employee Retirement Income Security Act of 1974 (ERISA): A single-employer plan termination insurance program and a multiemployer plan insolvency insurance program. This proposed rule applies only to the single-employer program.

Covered single-employer plans that are underfunded may terminate in

[1] Section 417(e)(3) of the Code and section 205(g)(3) of the Employee Retirement Income Security Act of 1974 (ERISA) are parallel provisions in ERISA and the Code.

either a distress termination under section 4041(c) of ERISA or in an involuntary termination (one initiated by PBGC) under section 4042 of ERISA. When such a plan terminates, PBGC typically is appointed statutory trustee of the plan and becomes responsible for paying guaranteed benefits in accordance with section 4022 of ERISA and PBGC's regulation on Benefits Payable in Terminated Single-Employer Plans (29 CFR part 4022).[2]

PBGC calculates the present value of each participant's benefit to determine whether it is de minimis (present value of $5,000 or less) and therefore may be paid as a lump sum.[3] Assumptions used to value benefits for this purpose are set forth in PBGC's benefit payments regulation. The interest assumption, published each month, employs a four-tiered structure to discount future benefit payments for determining their lump sum equivalent. This structure consists of an ''immediate'' rate for discounting benefits for the period between the annuity starting date and each future payment date, and up to three ''deferred'' rates for discounting benefits during specified parts of the period leading up to the annuity starting date (*e.g.,* first 7 years, next 8 years, and years beyond). The mortality assumption is the 1984 Unisex Pensioners Mortality Table.

Use of PBGC's Lump Sum Interest Rates by Private Sector

PBGC is aware that a relatively small number of plans use PBGC's interest rates as computed using its historical methodology (legacy interest rates) to determine the lump sum equivalents of annuity benefits.[4] It is PBGC's understanding that these plans do so because, before 1994, under section 417(e)(3) of the Code, plans were required to use PBGC's legacy interest rates to determine the minimum permissible lump sum equivalent of an annuity benefit.[5]

The Retirement Protection Act of 1994, Public Law 103–465 (RPA '94) changed the interest rate specified in section 417(e)(3) of the Code. As a result, private-sector plans were no longer required to use PBGC's lump sum interest rates to determine the minimum lump sum equivalents of annuity benefits. Anecdotal evidence suggests many, if not most, plans were amended to discontinue use of PBGC's legacy interest rates for calculating lump sum equivalents of annuity benefits by adopting the new interest assumption under section 417(e)(3) of the Code.

To preserve the possibility of a change in the way PBGC-paid lump sums are determined without affecting private-sector plans that use PBGC's legacy interest rates to determine lump sums, PBGC publishes two separate tables of lump sum interest rates. Appendix B provides the interest rates for PBGC-paid lump sums, and appendix C provides the legacy interest rates for use by the private sector. To date, the tables have always been identical.

PBGC first started publishing two sets of interest rates in 2000. At that time, PBGC recommended that plan sponsors amend (or draft) plans to explicitly reference ''PBGC's lump sum interest rates for private-sector payments'' (*i.e.,* appendix C) if they wanted to ensure plans would not be affected by a future change to the way in which PBGC-paid lump sums are determined.[6]

Proposed Regulatory Changes

Adopt Lump Sum Assumptions From Section 417(e)(3) of the Code

Actuarial practice, with the help of technology, has moved toward a yield-curve approach where future benefits are discounted to the measurement date based on yields on bonds of similar duration. By associating an interest rate with a specific time horizon, a yield curve better approximates the present value of future benefits. As a result, the immediate and deferred structure of PBGC's legacy interest rates has become increasingly obsolete.

Additionally, the methodology PBGC uses to compute each month's immediate and deferred interest rates, which was established at a time when computing resources were limited, is simplistic and typically results in interest rates significantly lower than the rates most private-sector plans use to determine lump sums.

Taking into consideration modern structures and methods, PBGC proposes to adopt the lump sum interest rate assumption from section 417(e)(3) of the Code. Specifically, PBGC proposes to amend its benefit payments regulation to provide that PBGC will use the ''applicable interest rate'' [7] specified in section 417(e)(3)(C) of the Code and section 205(g)(3)(B)(ii) of ERISA to calculate the present value of annuity benefits (for the purposes of determining if the benefit is de minimis and if so, the amount payable as a lump sum).

PBGC also considered whether the lump sum mortality assumption, *i.e.* the 1984 Unisex Pensioners Mortality Table, should be replaced in this proposed rule. Although that table does not reflect recent mortality improvements, the combination of using it with PBGC's legacy interest rates results in lump sum amounts that are similar to amounts determined using the interest and mortality assumptions under section 417(e)(3) of the Code. This would no longer hold true if PBGC were to adopt the interest rates under section 417(e)(3) of the Code without also revising its lump sum mortality assumption. Accordingly, to ensure the amount of PBGC-paid lump sums remains relatively unaffected by this change, PBGC proposes to amend its benefit payments regulation to provide that PBGC will use the ''applicable mortality table'' specified in section 417(e)(3)(B) of the Code and section 205(g)(3)(B)(i) of ERISA.

PBGC expects that the proposed changes to adopt the interest and mortality assumptions specified in section 417(e)(3) of the Code would have a minimal effect on participants and beneficiaries of plans it trustees because, as noted above, PBGC uses these assumptions only for purposes of determining de minimis lump sum amounts. Also, because the interest and mortality changes would generally have offsetting effects, the net impact would be small. For example, using a participant aged 40 and the January 2019 interest rates to illustrate the impact, the lump sum amount determined under the proposal would be within 1 percent of the amount determined using current methods and assumptions.[8] In general, the proposed assumptions would result in slightly larger lump sums for older participants and slightly smaller lump sums for younger participants. The impact on any particular benefit would depend on individual demographic factors and

[2] PBGC also pays non-guaranteed benefits when there are sufficient plan assets or recoveries.

[3] *See* 29 CFR 4022.7(b)(1)(i).

[4] Some insurers may also use PBGC's legacy interest rates to determine lump sums payable under a group annuity contract for a pension plan that used such rates after it closed out in a standard termination.

[5] To determine the minimum lump sum equivalent of an annuity benefit, plans used PBGC's lump sum interest rates for benefits under $25,000 and used 120 percent of PBGC's lump sum interest rates for benefits $25,000 and over. Section 417(e) of the Code (1988) (amended 1994).

[6] *See* 65 FR 14753, 14755 (March 17, 2000).

[7] The interest assumption in section 417(e)(3) of the Code was updated by section 302(b) of the Pension Protection Act of 2006, Public Law 109–280. The applicable interest rate is defined as the spot segment rates published by the Internal Revenue Service each month.

[8] Age 40 was used for this illustration because an analysis of plans trusteed by PBGC in the past 10 years indicated that the median age at plan termination of participants with de minimis benefits was age 40.

assumptions in effect on the benefit's valuation date.

Discontinue Publication of Legacy Interest Rates

As noted in the background section, PBGC is aware that a relatively small number of plans still use its legacy interest rates to determine lump sums. In developing this proposal, PBGC considered whether to continue calculating and publishing legacy interest rates in appendix C for use by private-sector plans.[9] Given that the legacy interest rates' structure and methodology have become increasingly obsolete, PBGC concluded that continued publication of the legacy interest rates for any use would be inappropriate. Instead, PBGC proposes to publish a final set of interest rates in appendix C for private-sector plans to use for valuation dates on or after the effective date of the final rule equal to the average immediate and deferred rates for the 120-month period ending in July 2019, rounded to the nearest quarter percent. Thus, for valuation dates on or after the effective date of the final rule, appendix C would provide for an immediate rate of 1.5 percent for discounting benefits for the period between the annuity starting date and each future payment date and a deferred rate of 4 percent for discounting benefits during the period leading up to the annuity starting date.

With respect to plans that use the legacy interest rates, PBGC does not have information as to whether plan documents explicitly refer to the interest rates for use by private-sector plans per appendix C or whether they include more general references to PBGC's lump sum interest rates or the rates PBGC ''uses.'' For a plan in the latter category, once the appendix C rates are no longer identical to the rates used by PBGC, the plan terms may have an ambiguity that should be resolved. Resolving this ambiguity would not necessarily mean that such a plan would have to start using the ''applicable interest rate'' for that purpose (which could result in smaller lump sums). Rather, unclear provisions in such a plan could be amended to specify the use of the interest rates in appendix C, provided that the resulting lump sum is no less than the minimum amount determined in accordance with section 417(e)(3) of the Code and that any other applicable requirements are satisfied.[10]

Because PBGC has incomplete information on private-sector plan use of its legacy interest rates, PBGC is soliciting comments on which private-sector plans use these rates and for what purpose, and whether setting the legacy interest rates at a 120-month average would cause any undue burden. PBGC also seeks comment on whether other entities (*e.g.,* insurance companies) use its legacy interest rates and for what purpose.

Applicability

The amendments affecting PBGC's calculation and payment of lump sum benefits would apply to trusteed plans with termination dates on or after the effective date of the final rule.

Executive Orders 12866, 13563, and 13771

OMB has determined that this rulemaking is not a ''significant regulatory action'' under Executive Order 12866. Accordingly, this proposed rule is exempt from the requirements of Executive Order 13771 and OMB has not reviewed the rule under Executive Order 12866.

Executive Orders 12866 and 13563 direct agencies to assess all costs and benefits of available regulatory alternatives and, if regulation is necessary, to select regulatory approaches that maximize net benefits (including potential economic, environmental, public health and safety effects, distributive impacts, and equity).

Although this is not a significant regulatory action under Executive Order 12866, PBGC has examined the economic implications of this proposed rule and has concluded that the proposed changes would have minimal impact on PBGC's payment of lump sum benefits. As discussed above, applying the assumptions under section 417(e)(3) of the Code to a benefit could slightly raise or lower a lump sum benefit paid by PBGC. Additionally, with respect to plans terminating on or after the effective date, some benefits that would have been considered de minimis using the prior assumptions would not be de minimis using the revised assumptions (and vice versa).

For the relatively small number of private-sector plans that use PBGC's legacy interest rates to determine lump sums, PBGC expects that most refer to appendix C. Because the final interest rate set is an average of recent rates, the proposed change would have little to no impact on these plans. Of plans referring generally to PBGC's lump sum interest rates, PBGC expects that some of the affected plans would be amended to refer to appendix C. However, some plans could pay smaller lump sums and consequentially, some participants could receive smaller lump sums.

Section 6 of Executive Order 13563 requires agencies to rethink existing regulations by periodically reviewing their regulatory program for rules that ''may be outmoded, ineffective, insufficient, or excessively burdensome.'' These rules should be modified, streamlined, expanded, or repealed as appropriate. PBGC has identified the assumptions used for lump sums in its benefit payments regulation as outmoded and the proposed amendment to remove these assumptions as consistent with the principles for review under E.O. 13563.

Regulatory Flexibility Act

The Regulatory Flexibility Act imposes certain requirements with respect to rules that are subject to the notice-and-comment requirements of section 553(b) of the Administrative Procedure Act and that are likely to have a significant economic impact on a substantial number of small entities. Unless an agency determines that a proposed rule is not likely to have a significant economic impact on a substantial number of small entities, section 603 of the Regulatory Flexibility Act requires that the agency present an initial regulatory flexibility analysis at the time of the publication of the proposed rule describing the impact of the rule on small entities and seeking public comment on such impact. Small entities include small businesses, organizations, and governmental jurisdictions.

For purposes of the Regulatory Flexibility Act requirements with respect to this proposed regulation, PBGC considers a small entity to be a plan with fewer than 100 participants. This is substantially the same criterion PBGC uses in other regulations [11] and is consistent with certain requirements in

[9] PBGC previously considered revising its methodology for determining lump sum interest rates and discontinuing publication of its legacy interest rates in 1998. *See* 63 FR 57228 (October 26, 1998); 65 FR 14753 (March 17, 2000).

[10] IRS has previously informed PBGC ''that a plan that refers to PBGC lump sum interest rates for purposes of calculating the amount of the distribution subject to Code section 417(e)(3) and that is amended before the PBGC amends its regulations to provide lump sum interest rates for PBGC payments that are no longer identical to the lump sum interest rates for private-sector payments will not fail to satisfy the 'anti-cutback' rules of Code section 411(d)(6) merely because it is amended to clarify that the plan's reference to PBGC lump sum interest rates means the lump sum interest rates for private-sector payments.'' 65 FR 14753, 14755 (March 17, 2000).

[11] *See, e.g.,* special rules for small plans under part 4007 (Payment of Premiums).

title I of ERISA [12] and the Code,[13] as well as the definition of a small entity that the Department of Labor has used for purposes of the Regulatory Flexibility Act.[14]

Further, while some large employers operate small plans along with larger ones, in general, most small plans are maintained by small employers. Thus, PBGC believes that assessing the impact of the final rule on small plans is an appropriate substitute for evaluating the effect on small entities. The definition of small entity considered appropriate for this purpose differs, however, from a definition of small business based on size standards promulgated by the Small Business Administration (13 CFR 121.201) pursuant to the Small Business Act. PBGC therefore requests comments on the appropriateness of the size standard used in evaluating the impact on small entities of the amendments to the benefit payments regulation to implement this proposed rule.

On the basis of its proposed definition of small entity, PBGC certifies under section 605(b) of the Regulatory Flexibility Act (5 U.S.C. 601 *et seq.*) that the amendments in this proposed rule would not have a significant economic impact on a substantial number of small entities. The vast majority of the effect of this proposed rule would be on PBGC or persons with very small benefits who will be receiving their benefits from PBGC. Though an unknown number of plans use PBGC's lump sum interest rates to calculate lump sums, it is unlikely that a substantial number of small plans still use these rates as they have not been required to do so since RPA '94 took effect over 20 years ago. Accordingly, as provided in section 605 of the Regulatory Flexibility Act, sections 603 and 604 do not apply.

List of Subjects in 29 CFR Part 4022

Employee benefit plans, Pension insurance, Reporting and recordkeeping requirements.

For the reasons given above, PBGC proposes to amend 29 CFR part 4022 as follows:

PART 4022—BENEFITS PAYABLE IN TERMINATED SINGLE-EMPLOYER PLANS

■ 1. The authority citation for part 4022 continues to read as follows:

Authority: 29 U.S.C 1302, 1322, 1322b, 1341(c)(3)(D), and 1344.

■ 2. Amend § 4022.7 by revising paragraphs (d)(2) and (e) to read as follows:

§ 4022.7 Benefits payable in a single installment.

* * * * *

(d) * * *

(2) *Actuarial assumptions.* PBGC will calculate the lump sum value of a benefit by valuing the monthly annuity benefits payable in the form determined under § 4044.51(a) of this chapter and commencing at the time determined under § 4044.51(b) of this chapter. The actuarial assumptions used will be those described in § 4044.52 of this chapter, except as follows:

(i) *Loading for expenses.* There will be no adjustment to reflect the loading for expenses.

(ii) *Mortality assumption.* The ''applicable mortality table'' specified in section 205(g)(3)(B)(i) of ERISA and section 417(e)(3)(B) of the Code for the year containing the termination date will apply.

(iii) *Interest rate assumption.* The ''applicable interest rate'' specified in section 205(g)(3)(B)(ii) of ERISA and section 417(e)(3)(C) of the Code for the month containing the termination date will apply.

(iv) *Date for determining lump sum value.* The date as of which a lump sum value is calculated is the termination date, except that in the case of a subsequent insufficiency it is the date described in section 4062(b)(1)(B) of ERISA.

(e) *Private-sector lump sum rates.* PBGC provides lump sum interest rates for private-sector payments in appendix C to this part.

Appendix A to Part 4022—[Removed and Reserved]

■ 3. Remove and reserve appendix A.

Appendix B to Part 4022—[Removed and Reserved]

■ 4. Remove and reserve appendix B.

■ 5. In appendix C to part 4022, a final rate set is added at the end of the table to read as follows:

Appendix C to Part 4022—Lump Sum Interest Rates for Private-Sector Payments

* * * * *

Rate set	For plans with a valuation date		Immediate annuity rate (percent)	Deferred annuities (percent)				
	On or after	Before		i_1	i_2	i_3	n_1	n_2
*	*		*	*	*	*		*
Final	[EFFECTIVE DATE OF FINAL RULE]	.....	1.50	4.00	4.00	4.00	7	8

Issued in Washington, DC.

Gordon Hartogensis,

Director, Pension Benefit Guaranty Corporation.

[FR Doc. 2019–21087 Filed 9–27–19; 8:45 am]

BILLING CODE 7709–02–P

[12] *See, e.g.,* section 104(a)(2) of ERISA, which permits the Secretary of Labor to prescribe simplified annual reports for pension plans that cover fewer than 100 participants.

[13] *See, e.g.,* section 430(g)(2)(B) of the Code, which permits plans with 100 or fewer participants to use valuation dates other than the first day of the plan year.

[14] *See, e.g.,* DOL's final rule on Prohibited Transaction Exemption Procedures, 76 FR 66,637, 66,644 (Oct. 27, 2011).

PENSION BENEFIT GUARANTY CORPORATION

29 CFR Parts 4022, 4044, and 4062

RIN 1212–AB27

Benefit Payments and Allocation of Assets

AGENCY: Pension Benefit Guaranty Corporation.

ACTION: Proposed rule.

SUMMARY: This proposed rule would make changes to PBGC's regulations on Benefits Payable in Terminated Single-Employer Plans and Allocation of Assets in Single-Employer Plans. The changes would make clarifications and codify policies involving payment of lump sums, changes to benefit form, partial benefit distributions, and valuation of plan assets.

DATES: Comments must be submitted on or before November 29, 2019 to be assured of consideration.

ADDRESSES: Comments may be submitted by any of the following methods:

Federal eRulemaking Portal: http://www.regulations.gov. Follow the website instructions for submitting comments.

Email: reg.comments@pbgc.gov.

Mail or Hand Delivery: Regulatory Affairs Division, Office of General Counsel, Pension Benefit Guaranty Corporation, 1200 K Street NW, Washington, DC 20005–4026.

All submissions must include the agency's name (Pension Benefit Guaranty Corporation, or PBGC) and the Regulation Identifier Number for this rulemaking (RIN 1212–AB27). Comments received will be posted without change to PBGC's website, *http://www.pbgc.gov,* including any personal information provided. Copies of comments may also be obtained by writing to Disclosure Division, Office of the General Counsel, Pension Benefit Guaranty Corporation, 1200 K Street NW, Washington, DC 20005–4026, or calling 202–326–4040 during normal business hours. TTY users may call the Federal relay service toll-free at 1–800–877–8339 and ask to be connected to 202–326–4040.

FOR FURTHER INFORMATION CONTACT: Joseph M. Krettek (*krettek.joseph@pbgc.gov*), Assistant General Counsel for Benefits, 202–326–4400 ext. 6772; or Deborah C. Murphy (*murphy.deborah@pbgc.gov*), Assistant General Counsel; Office of the General Counsel, Pension Benefit Guaranty Corporation, 1200 K Street NW, Washington, DC 20005–4026. TTY users may call the Federal relay service toll-free at 1–800–877–8339 and ask to be connected to 202–326–4400 ext. 6772.

SUPPLEMENTARY INFORMATION:

Executive Summary

Purpose and Authority

This proposed rule would amend PBGC's regulations on benefit payments, allocation of assets, and termination liability to increase transparency of PBGC benefits administration, clarify and simplify language, increase flexibility, codify practices, and harmonize regulatory provisions with statutory provisions.

Legal authority for this action comes from section 4002(b)(3) of the Employee Retirement Income Security Act of 1974 (ERISA), which authorizes PBGC to issue regulations to carry out the purposes of title IV of ERISA, section 4022 of ERISA (Single-Employer Plan Benefits Guaranteed), section 4044 of ERISA (Allocation of Assets), and section 4062 of ERISA (Liability For Termination of Single-Employer Plans).

Major Provisions

This proposed rule would:

Clarify that PBGC's rules on payment of a lump sum are unaffected by election of a lump-sum distribution before plan termination.

Change wording that refers to the dollar amount currently subject to cashout by statute ($5,000) so it refers instead to the statutory provision that specifies that dollar amount.

Clarify that a de minimis benefit of a participant who dies after plan termination will be paid as an amount due a decedent, not as a qualified preretirement survivor annuity.

Clarify that benefits will be paid to estates only as lump sums.

Clarify that accumulated mandatory employee contributions may not be withdrawn if benefits are in pay status when a plan becomes trusteed.

Clarify that the form of benefit in pay status when a plan becomes trusteed will not be changed.

Clarify that pre-trusteeship partial distributions are considered in determining benefits.

Require that fair market value or fair value, as appropriate, be used for purposes of valuing assets to be allocated to participants' benefits and in determining employer liability and net worth.

Background

The Pension Benefit Guaranty Corporation (PBGC) administers two insurance programs for private-sector defined benefit pension plans under title IV of the Employee Retirement Income Security Act of 1974 (ERISA): A single-employer plan termination insurance program and a multiemployer plan insolvency insurance program. This proposed rule deals only with single-employer plans. Covered plans that are underfunded may terminate either in a distress termination under section 4041(c) of ERISA or in an involuntary termination (one initiated by PBGC) under section 4042 of ERISA. When such a plan terminates, PBGC typically is appointed statutory trustee of the plan, and becomes responsible for paying benefits in accordance with the provisions of title IV.

The amount of benefits paid by PBGC under a terminated trusteed plan is determined by several factors. The starting point is the plan—PBGC pays only those benefits that the plan provides under the plan's terms. Thus, PBGC begins by determining each participant's accrued plan benefit.

After PBGC determines the amount of the participant's plan benefit, PBGC determines the amount it can guarantee. There are limitations on the benefits that PBGC can guarantee. One limitation, under sections 4001(a)(8) and 4022(a) of ERISA, is that PBGC guarantees only those benefits that are ''nonforfeitable.'' For purposes of title IV, a benefit is nonforfeitable if the participant had satisfied the plan's (or ERISA's) requirements for the benefit by the plan's termination date (or, if applicable, by the bankruptcy filing date of the plan sponsor).[1]

Another limitation is the ''maximum guaranteeable benefit'' rule set forth in section 4022(b)(3) of ERISA, which caps the amount that PBGC can guarantee. The cap for a participant in a plan with a termination date in 2019 (or, if applicable, a bankruptcy filing date of the sponsor in 2019), who retires at age 65 under a straight-life annuity, is $5,607.95 per month. PBGC's guarantee is further limited by the ''phase-in'' rule, under which PBGC's guarantee of

[1] *See* 29 CFR 4022.3(a)(1). For a plan that terminates while its sponsor is the subject of a bankruptcy or other insolvency proceeding, the petition or filing date of the proceeding is treated as the plan's termination date for purposes of the guarantee rules. *See* section 4022(g) of ERISA and 29 CFR 4022.3(b). *See also* section 404 of the Pension Protection Act of 2006, Public Law 109–280 (Aug. 17, 2006).

benefit increases during the 5-year period ending on the plan's termination date (or, if applicable, the bankruptcy filing date) is ''phased in'' at the number of years the benefit increase has been in effect, multiplied by the greater of: (1) 20 percent of the amount of the benefit increase; or (2) $20 per month.[2] The ''phase-in'' rule protects the title IV insurance program from losses when the sponsor of an underfunded pension plan increases benefits shortly before the plan terminates. Another limitation, the accrued-at-normal limitation, is equal to the dollar amount of a participant's benefit in the straight life annuity form at normal retirement age. The portion that exceeds this limitation is not a PBGC guaranteeable benefit.

In some cases a participant may receive more than his or her guaranteed benefit, depending on the allocation of the plan's assets under section 4044(a) of ERISA or the allocation of PBGC's recoveries under section 4022(c) of ERISA, or both. Title IV directs PBGC to allocate the assets of a terminated pension plan among the participants and beneficiaries of the plan in the order of six priority categories. Section 4044(a) gives highest priority to benefits derived from participants' own contributions (priority categories 1 and 2), next highest to benefits of certain retirees or persons who were or could have been in pay status three years before the plan terminated based on the lowest annuity benefit payable under the plan provisions at any time during the 5-year period ending on the termination date (priority category 3),[3] then to benefits guaranteed by PBGC (priority category 4), and last to nonguaranteed benefits (priority categories 5 and 6). PBGC allocates assets to benefits in priority category 3—some of which may not be guaranteed—before guaranteed benefits in priority category 4. So, if a terminated plan's assets are sufficient to cover all benefits in priority category 3, PBGC will pay those benefits using the plan's assets, regardless of whether they are guaranteed.

PBGC values the benefits in each of a terminated plan's six priority categories and values the terminated plan's assets. PBGC values both benefits and plan assets as of the termination date. After PBGC values the plan benefits and assets, the assets are allocated to the priority categories, beginning with priority category 1, either until all benefits in all categories have been covered or until the assets are insufficient to pay all benefits within a category.

In determining a participant's PBGC-payable benefit under title IV of ERISA, PBGC takes into account any partial plan distribution (whether a lump sum or an annuity purchase) that the plan made to the participant before plan trusteeship. PBGC offsets the benefit payable under title IV by the amount of the earlier distribution. This includes accounting for the distribution in determining the participant's maximum guaranteeable benefit (*i.e.,* the maximum benefit that PBGC can guarantee by law, based on, among other things, the plan's termination date (or, if applicable, bankruptcy filing date), the participant's age, and his or her form of benefit). PBGC reduces the amount otherwise guaranteed because a participant in receipt of a partial plan distribution is effectively receiving each month a portion of his or her plan benefits (even if the distribution was paid as a lump sum). Likewise, PBGC accounts for the earlier distribution in assigning a participant's benefit to the priority categories under section 4044(a) of ERISA. PBGC treats the amount paid as in the highest priority category in which the participant has benefits, because the participant has already received the distribution (or is receiving it as a separate annuity from an insurer).

PBGC prescribes the forms of benefit under which payment may be made. For a participant or beneficiary receiving an annuity benefit from the plan at the time PBGC becomes trustee of the plan, PBGC generally continues payment in the form being paid. For participants not yet in pay status, PBGC provides the plan's automatic forms for married and unmarried participants and a menu of optional PBGC annuity forms. Except in very limited circumstances, PBGC pays benefits as annuities, not single lump sums. One exception is where the total value of the participant's benefit is de minimis—*i.e.,* $5,000 or less under current law. Another exception is where a portion of the participant's benefit is attributable to mandatory employee contributions. In this case, PBGC allows a participant to elect a return of his or her accumulated mandatory employee contributions in a lump sum.

A participant or beneficiary in pay status in almost all circumstances cannot change his or her elected form of benefit after PBGC becomes plan trustee. This rule is consistent with the practices of most ongoing plans and prevents adverse selection (for example, by allowing a participant to choose a single-life form after his or her spouse dies) and possible increased actuarial costs. PBGC has applied this rule both to participants and beneficiaries who went into pay status after PBGC became trustee and to participants and beneficiaries who were in pay status at the time PBGC became trustee and who later requested a change in benefit form from PBGC.

When an underfunded title IV-covered plan terminates, a claim arises in favor of PBGC and against the former sponsor and its controlled group for the difference between the plan's benefit liabilities and its assets. PBGC determines this claim for the amount of unfunded benefit liabilities as of the termination date and accrues interest from that date.[4] ERISA directs PBGC to collect any portion of this claim that exceeds 30 percent of the collective net worth of the former sponsor and its controlled group under commercially reasonable terms.[5] PBGC calculates its claim for unfunded benefit liabilities consistently with its determination of assets and benefit liabilities for purposes of the asset allocation under section 4044(a).

PBGC's regulations on Benefits Payable in Terminated Single-Employer Plans, 29 CFR part 4022, Allocation of Assets in Single-Employer Plans, 29 CFR part 4044, and Liability for Termination of Single-Employer Plans, 29 CFR part 4062 govern these areas. In the course of PBGC's regulatory review, PBGC has identified opportunities to improve benefits administration by making it more transparent—filling in gaps where guidance is needed, simplifying or removing language, codifying policies, and applying consistency in asset valuation. Accordingly, PBGC is proposing to amend these three regulations to make the changes described below. PBGC invites comment on the proposed changes.

A detailed discussion of the proposed regulatory changes follows.

Proposed Regulatory Changes

General Prohibition of Lump Sums

Payments of lump sums at or soon before plan termination raise concerns about abuse of the insurance program. For example, a lump-sum payment reduces the amount of assets in an underfunded plan that could be allocated to the benefits of other participants, who may have benefits in higher priority categories, or that could fund guaranteed benefits. Thus,

[2] *See* section 4022(b)(1), (b)(7), and (g) of ERISA.

[3] For a plan that terminates while its sponsor is the subject of a bankruptcy or other insolvency proceeding, the 3-year and 5-year lookbacks under priority category 3 are based on the bankruptcy filing date rather than the plan's termination date. *See* section 4044(e) of ERISA.

[4] *See* sections 4001(a)(18) and 4062(b)(1) of ERISA.

[5] *See* section 4062(b)(2) of ERISA.

payment of such a lump sum could adversely affect other participants or PBGC.[6] As noted above, PBGC does not pay benefits in a lump sum except in certain limited circumstances (*e.g.,* de minimis benefits). Section 4022.7(a) of the benefit payments regulation currently provides that ''[i]f a benefit that is guaranteed under this part is payable in a single installment or substantially so under the terms of the plan, or an option elected under the plan by the participant, the benefit will not be guaranteed or paid as such,'' but PBGC will guarantee the annuity equivalent.

Some have suggested that the prohibition on lump-sum payments does not apply to a participant who elected a lump sum before plan termination.[7] To remove any ambiguity in the regulation, PBGC proposes to amend § 4022.7(a) of the benefit payments regulation to make explicit (and consistent with PBGC's practice) that the prohibition on lump sums includes an optional lump sum elected under the plan by the participant but not paid before plan trusteeship. This rule would apply regardless of the reason for not paying the lump sum.

This change would not affect the payment of benefits in a lump sum in the circumstances permitted under § 4022.7(b) and (c) of the benefit payments regulation.

De Minimis Threshold

Section 203(e)(1) of ERISA and section 411(a)(11)(A) of the Internal Revenue Code (Code) set the maximum present value of a benefit that a pension plan may pay in a mandatory lump-sum distribution as $5,000. Before 1997, the maximum was $3,500. PBGC's benefit payments regulation contains three provisions that refer to this threshold, and the regulation had to be amended when the amount increased.[8] To avoid amending the regulation again if Congress changes the current threshold, PBGC proposes to amend the three provisions so that they refer not to a set amount, but to the dollar amount specified under section 203(e)(1) of ERISA.

The three provisions are §§ 4022.7(b)(1)(i) and (iii) and 4022.7(d)(1) of the current benefit payments regulation.

Deceased Participants With De Minimis Benefits

Currently, § 4022.7(b)(1)(iii) of the benefit payments regulation provides that if (1) the lump sum value of a qualified preretirement survivor annuity (QPSA) is $5,000 or less, (2) the benefit is not yet in pay status, and (3) the participant dies after the termination date, then the surviving spouse may elect to receive the QPSA benefit as a lump sum or an annuity. Section 4022.7(b)(1)(iii) of the benefit payments regulation is silent about the lump-sum value of the participant's benefit, and the provision would appear to apply regardless, so long as the three conditions above are met. However, if the lump-sum value of the participant's benefit is de minimis as of the termination date under § 4022.7(b)(1)(i) of the benefit payments regulation and the participant dies after the termination date, PBGC's policy is to pay the benefit under the rules in subpart F of the benefit payments regulation (''Certain Payments Owed Upon Death''). Subpart F provides rules for the payment of benefits that may be owed to a deceased participant or beneficiary, such as the reimbursement of an earlier underpayment to the participant or beneficiary. PBGC treats de minimis benefits as due and owing as of the plan's termination date, because they are payable by PBGC at any time, regardless of the participant's age, and presumably most participants with de minimis benefits would apply for an immediate lump sum if PBGC were able to notify them of its availability upon plan termination.

PBGC proposes to amend § 4022.7(b)(1)(iii) of the benefit payments regulation to make clear that in the case of a participant with a de minimis benefit who dies after the plan's termination date and whose benefit is not yet in pay status, PBGC will treat the benefit as payable under subpart F. Furthermore, if a participant is married, PBGC will pay the full value of the participant's de minimis benefit to the surviving spouse (not limited to the value of a QPSA), with any interest owed. PBGC proposes to clarify § 4022.93 of subpart F (''Who will get the benefits PBGC may owe me at the time of my death?'') by adding an exception to the current order of priority. Proposed new § 4022.93(d) would provide that the surviving spouse of a participant with a benefit that does not exceed the dollar amount specified in section 203(e)(1) of ERISA, who dies after the termination date when the benefit is not yet in pay status, will receive the full value of the de minimis benefit of a deceased participant. This benefit will normally exceed the value of the QPSA.

Additionally, PBGC proposes to clarify the form of PBGC's payment to a surviving spouse where the participant has a non de minimis benefit. In proposed new § 4022.7(b)(1)(iv), if the deceased participant's benefit exceeds the dollar amount specified in section 203(e)(1) of ERISA but the lump sum value of annuity payments under the QPSA does not exceed that amount, and the benefit is not in pay status, PBGC may pay the QPSA as a lump sum, or as an annuity, if available and elected by the surviving spouse. For example, if the value of the participant's benefit is $6,000 and the value of the QPSA is $3,000, PBGC will pay the QPSA of $3,000 to the surviving spouse in a lump sum, or as an annuity, if available, and if elected by the surviving spouse. (By contrast, if the value of the participant's benefit is $4,000, PBGC would treat that amount as owed to the participant and pay the full $4,000 to the spouse under subpart F of the benefit payments regulation.)

Payments to Estates

PBGC may owe benefits to a deceased participant or beneficiary as of the date of his or her death. For example, benefits may be owed if the estimated benefit that PBGC paid before the date of death was less than the final benefit that PBGC determines should have been paid. Or, as described above, the participant may have been owed a de minimis benefit. Subpart F of the benefit payments regulation identifies the recipient of benefits owed at death. One possible payee is the participant's or beneficiary's estate.[9]

Currently, § 4022.7(b)(1)(iv) of PBGC's benefit payments regulation provides for a lump-sum payment ''if so elected by the estate.'' The typical alternative to a lump sum is a life annuity—and a life annuity is inappropriate for an estate.

Accordingly, PBGC proposes to redesignate current § 4022.7(b)(1)(iv) as new § 4022.7(b)(1)(v) and eliminate the annuity election, so that lump-sum payment becomes automatic for an estate. The proposed change clarifies

[6] As an indication that Congress was concerned about lump sums affecting other participants, section 4045 of ERISA authorizes PBGC to recover a portion of a lump sum made before plan termination. The statute allows PBGC to recover, for payments made within the three-year period immediately before termination, the amount which exceeds the present value of the guaranteed benefit that the participant would have received if he or she had elected to receive the benefit as an annuity.

[7] *See, e.g., Fisher* v. *PBGC,* 151 F.Supp.3d 159 (D.D.C. 2016) (remanded to PBGC for further explanation of its denial of a lump-sum distribution elected by a participant before the plan filed its distress termination notice). In July 2016, PBGC's Appeals Board issued a revised decision, which is the subject of continuing litigation in the same court, case no. 14–1275 (RDM). The Board's decision is available at *https://www.pbgc.gov/sites/default/files/legacy/docs/apbletter/Guarantee-of-a-QSERP-On-Remand-2016-07-22.pdf.*

[8] *See* 63 FR 38305 (July 16, 1998).

[9] *See* 29 CFR 4022.93(a).

that PBGC will always pay benefits owed to an estate, regardless of the de minimis threshold, in a lump sum, with no annuity option.

Accumulated Mandatory Employee Contributions

PBGC proposes to clarify that if a participant is not in pay status at the time the plan becomes trusteed, the participant may withdraw any accumulated mandatory employee contributions (AMECs) in a single lump sum at any time before going into pay status, if the plan would have permitted such a withdrawal. But if a participant is in pay status at the time the plan becomes trusteed, PBGC will not allow the participant to change his or her benefit and elect a withdrawal of his or her AMECs.

Mandatory employee contributions (MECs) are contributions that are required as a condition of employment with the plan sponsor or of obtaining benefits under the plan attributable to employer contributions. AMECs are MECs credited with interest at a specified rate, as described under section 411(c)(2) of the Code. In general, AMECs provide for an employee-derived benefit and a preretirement death benefit. Some plans provide that participants may withdraw their AMECs before retirement.

For a terminated plan, section 4044(a)(2) of ERISA makes the portion of a participant's benefit derived from his or her AMECs a priority category 2 (PC2) benefit. Section 4022.7(b)(2) of PBGC's benefit payments regulation permits PBGC to pay a participant his or her AMECs in a lump sum if two conditions are met: [10] The participant elects payment of the AMECs as a lump sum within 61 days after he or she receives notification that an election is available; and payment of the AMECs as a lump sum is consistent with the plan's provisions.

PBGC proposes to simplify administration of the AMEC provisions by amending § 4022.7(b)(2)(i) to remove the 61-day limit.

Although plans typically offer only a lump-sum return of AMECs, § 4022.7(b)(2)(i) of the benefit payments regulation allows a participant to withdraw his or her AMECs not just in a single lump sum, but in ''a series of installments.'' Providing this treatment has administrative costs for PBGC, and the option has low value to participants. If a participant wishes to receive his or her AMECs over time, he or she can elect to have the AMECs increase his or her monthly annuity benefit. PBGC sees no compelling reason for the regulation to continue including this separate option, and proposes to eliminate it.

Section 4022.7(b)(2)(ii) of the benefit payments regulation currently permits a participant who has already begun receiving from the plan an annuity that is partially derived from AMECs to elect a return of his or her AMECs after plan termination. This provision is inconsistent with the general rule (discussed below under *Change in benefit form*) that once a benefit is in pay status, no change is permitted. In practice, PBGC does not give a participant who was in pay status at the time the plan becomes trusteed the option of withdrawing AMECs after payments have begun. PBGC proposes to clarify that it does not permit participants in pay status to elect to withdraw AMECs. The proposed rule would amend § 4022.7(b)(2)(ii) to provide that if a participant is in pay status at the time the plan becomes trusteed,[11] PBGC will not allow the participant to withdraw any AMECs.

Change in Benefit Form and Benefit Corrections

In almost all plans, changes in the form of payment after benefit commencement—for example, by allowing a participant to add or eliminate a survivor benefit or substitute one beneficiary for another—are not permitted. Such changes—made with information not available when benefit payments began—could result in increased actuarial costs to a plan. For example, a participant might, after starting a straight-life annuity, learn that his or her health is failing and therefore wish to add a survivor benefit to continue payments after his or her death.

Similarly, PBGC generally does not allow a participant to change his or her elected form of benefit after payments begin. Section 4022.8(d) of PBGC's current benefit payments regulation provides that ''[o]nce payment of a benefit starts, the benefit form cannot be changed.'' However, § 4022.8(a) provides, ''[t]his section applies where benefits are not already in pay status.''

The regulation was intended to prevent changes in the form of a benefit commenced both before and after PBGC trusteeship.[12] To remove any doubt that the benefit form may not be changed once payment of a benefit begins (at any point in time), PBGC proposes to amend § 4022.8(a) to remove the words ''[t]his section applies where benefits are not already in pay status.''

Although PBGC does not generally allow a change in the benefit form after benefits begin, PBGC's existing policies recognize that PBGC sometimes makes errors in the benefit estimates it sends to participants and beneficiaries, which may result in benefit elections that would not have been made if PBGC had provided more accurate estimates. Accordingly, PBGC proposes under new § 4022.9(d) to allow PBGC to make limited exceptions to the rule prohibiting changes in benefit form for such errors. Proposed § 4022.8(d) would provide that, subject to benefit corrections in § 4022.9(d), once payment of a benefit begins the form cannot be changed, regardless of whether PBGC or the plan put the participant into pay status.

Under PBGC's current policy, a change in the form of benefit is permitted under only two circumstances: (1) When PBGC erred by 10 percent or more in the relative value of optional forms when providing a benefit estimate (*i.e.,* PBGC used incorrect form conversion factors), and (2) when PBGC erred by 10 percent or more in the early retirement factor used to provide a benefit estimate. PBGC proposes to clarify the circumstances in which PBGC would permit a change in form of benefit. Proposed § 4022.9(d) would provide that PBGC may prescribe the time and manner for correcting errors, in benefit estimates and in initial determinations, that affect benefit form and benefit starting dates. Current paragraph (d) of § 4022.9 would become paragraph (e) of § 4022.9. In addition, PBGC proposes to revise the heading of § 4022.9 to reflect the promulgation of paragraph (d) concerning benefit corrections. The proposed heading for § 4022.9 would be: ''§ 4022.9 Time of Payment, benefit applications and corrections.''

Partial Benefit Distributions

The proposed rule would clarify that PBGC takes into account pre-trusteeship partial plan distributions (in lump sum

[10] PBGC's regulation makes an exception for benefits attributable to a rollover from a defined contribution plan. Such rollovers are described in IRS's guidance on the purchase of additional benefits from a defined benefit plan. *See* IRS Rev. Rul. 2012–4. These benefits are generally treated as AMECs, but PBGC does not allow payment of them in a lump sum. *See* 29 CFR 4022.7(b)(2)(iii).

[11] Although ERISA provides only that PBGC ''may'' become the trustee (*see* section 4042(b)(1) of ERISA), in practice PBGC has been appointed trustee of almost every underfunded plan that has terminated since 1974, and for this reason PBGC's regulations assume PBGC trusteeship of an underfunded terminated plan.

[12] The preamble to the final rule adopting § 4022.8 (67 FR 16950) explains that ''[i]f a participant's benefit is already in pay status, PBGC continues to pay the benefit (subject to the limitations in title IV of ERISA) in the form being paid.''

or annuity form) when determining a participant's maximum guaranteeable benefit (MGB) and the benefits assignable to the section 4044(a) priority categories.[13]

A participant in receipt of a partial plan distribution (including a rehired participant) is effectively already receiving each month a portion of his or her plan benefits (even if it was paid as a lump sum). PBGC takes the partial plan distribution into account in determining the participant's MGB under section 4022 of ERISA and in allocating assets to the participant's benefits under section 4044 of ERISA to avoid treating other participants unfairly and applying PBGC insurance funds improperly. PBGC has a longstanding policy that a pre-trusteeship partial plan distribution (whether a lump sum or an annuity purchase) is taken into account when PBGC determines a participant's benefit.

For purposes of section 4022, PBGC offsets the benefit payable under title IV of ERISA by the partial plan distribution in determining a participant's MGB.[14] If PBGC were to disregard the partial distribution, it could guarantee the participant a larger total benefit than allowed under sections 4022(a) and (b)(3) of ERISA, because the limitations apply to a participant's benefit under a plan, not just the portion that remains to be distributed as of the termination date. And the participant might receive a larger guaranteed benefit than another participant who was identically situated except that he or she did not receive a partial distribution. For similar reasons, PBGC takes account of a partial plan distribution when assigning benefits to the priority categories under section 4044(a) of ERISA.

To codify PBGC's treatment of a partial plan distribution when calculating the MGB, PBGC proposes to add a new provision to § 4022.23 of the benefit payments regulation (dealing with computation of maximum guaranteeable benefits). The new provision would explain how PBGC adjusts the MGB to account for a partial distribution. If the remainder annuity starts on the *same* date as the partial lump sum or purchased annuity, PBGC subtracts the monthly annuity equivalent of the partial plan distribution (generally determined as of the starting date of the distribution and using plan factors and assumptions) from the participant's MGB and adjusts the participant's MGB based on his or her age as of the plan's termination date (or, if applicable, bankruptcy filing date). If the distribution occurred after the plan's termination date (or, if applicable, bankruptcy filing date), PBGC subtracts the monthly annuity equivalent from the MGB and adjusts the MGB based on age at the distribution date.[15] Section 4022.23(c) of the benefit payments regulation therefore provides that the MGB should be adjusted for the participant's age and benefit form as of the later of the plan's termination date or the starting date of the purchased annuity or the monthly annuity equivalent.

If the partial plan distribution occurred *before* the starting date of the remainder annuity, and the remainder annuity starts *after* the plan's termination date (or, if applicable, bankruptcy filing date), then PBGC follows a two-step approach. PBGC first calculates the percentage of the MGB as of (i) the plan's termination date (or bankruptcy filing date) or (ii) the date of the partial distribution (if later), that the partial distribution represents. PBGC then multiplies the MGB applicable to the starting date of the remainder annuity by the percentage calculated in the first step. (The MGB determined in the second step will reflect any increases in age as of the later starting date of the remainder annuity.)[16]

For purposes of assigning benefits to the priority categories under section 4044(a) of ERISA, PBGC treats a partial plan distribution as reducing the participant's benefit in the highest priority (lowest-number) category in which he or she has benefits. (In most cases, this would be PC3 or PC4.) PBGC proposes to codify this treatment in § 4044.10 of its regulation on Allocation of Assets in Single-Employer Plans (dealing with manner of allocation).

PBGC's reasons for this treatment are similar to its reasons for adjusting the MGB to reflect a partial distribution. In substance, the participant has already received the highest possible priority for the portion of the benefit covered by the partial plan distribution because he or she already has the benefit in hand. Also, if PBGC were to do otherwise, partial plan distributions could further distort the section 4044 allocation, because the participants who received partial plan distributions would effectively be getting a double priority: Once for the partial plan distribution, and again for some or all of the remainder annuity. In many cases, this would disadvantage others in the same plan with benefits in the same priority category or higher priority categories, who had not received a partial distribution, because fewer assets would be allocated to their priority benefits.

To account for partial plan distribution, PBGC first values benefits in each of the priority categories, disregarding the distribution. PBGC then subtracts the monthly annuity equivalent of the partial plan distribution (generally determined as of the starting date of the remainder annuity, but no later than the plan's termination date, and using plan factors and assumptions) from the highest priority category in which the participant has benefits, continuing to the next highest priority category until the partial plan distribution has been fully accounted for.

The proposed amendments to § 4022.23 of the benefit payments regulation and § 4044.10(b) of the asset allocation regulation would codify the above treatment of partial plan distributions. PBGC also proposes to include an example in § 4022.23 of the benefit payments regulation to show how PBGC reduces the MGB for a partial plan distribution.

Valuation Methodology

PBGC proposes to amend its asset allocation regulation and its regulation on Liability for Termination of Single-Employer Plans (29 CFR part 4062) to apply fair market value or fair value, as appropriate, for purposes of allocating assets to participants' benefits and determining and collecting employer liability for plan underfunding.

When an underfunded pension plan terminates, PBGC must allocate the plan's assets among participants' benefits under section 4044 of ERISA, and it must determine the amount of the plan's unfunded benefit liabilities, *i.e.,* the shortfall in assets to cover benefit liabilities, and collect it from the contributing sponsor and its controlled group under section 4062 of ERISA. PBGC's collection of the shortfall may depend on the amount of the shortfall and the net worth of the contributing sponsor and each member of its controlled group. Thus, it is necessary—in addition to valuing the plan's benefit

[13] This rulemaking treats a lump sum or annuity purchase for a portion of a participant's plan benefit as a ''partial plan distribution,'' but it does not attempt to provide a complete or exhaustive definition of the term.

[14] *See, e.g.,* PBGC Op. Ltr. 86–28 (concluding that PBGC must deduct an annuity purchase when calculating the participant's MGB). PBGC's position has been upheld in court. *See Lami* v. *PBGC,* 1989 U.S. Dist. LEXIS 19153 (W.D. Pa. 1989).

[15] If the starting dates of the partial plan distribution and the remainder annuity are different, but both dates occur before the plan's termination date (or, if applicable, bankruptcy filing date), PBGC adjusts the MGB based on age as of the plan's termination date (or, bankruptcy filing date).

[16] This approach measures the percentage of the MGB that PBGC treats as ''used up'' upon receipt of the partial plan distribution and applies the remaining balance of the MGB to the remainder annuity.

liabilities—to value the plan's assets (to allocate to benefits and determine the shortfall) and the contributing sponsor's and controlled group members' net worth (to determine how PBGC is to collect the employer liability for the shortfall).

The statute does not explicitly require that these valuations be made in a consistent manner. It seems fair and reasonable, however, to use the same methodology to value plan assets for purposes of both allocating assets to benefits and determining the amount of unfunded benefit liabilities. It likewise seems fair and reasonable to use the same methodology for determining both employer liability and employer net worth.

The statute also does not specify the methodologies for valuing assets for purposes of allocating them to benefits among the priority categories or for determining employer net worth. For purposes of employer liability, section 4062(b)(1) of ERISA says that the liability is the plan's ''unfunded benefit liabilities,'' which under section 4001(a)(18) of ERISA is to be determined using the ''current value'' of plan assets. ''Current value'' is not defined in title IV.

Section 4044.41(b) of the asset allocation regulation provides that plan assets are to be valued for allocation purposes at their fair market value.[17] Likewise, § 4062.4(c) of the employer liability regulation provides that a person's net worth is equal to its fair market value. Section 4062.3 of the employer liability regulation simply repeats the statutory direction that employer liability equals the total amount of unfunded benefit liabilities. PBGC has in practice used fair market value for this purpose. Thus, the valuation methodology for allocation, employer liability, and net worth is consistent.

PBGC believes that the value of pension plan assets determined under a ''fair value'' framework may be considered a reasonable estimate of value for the same assets for purposes of satisfying the above fair market value requirements for allocating assets, determining employer liability, and calculating net worth of liable persons. This view is reflected in PBGC's plan asset valuation procedures. PBGC, therefore, currently applies a fair value methodology in some cases. These cases include, but are not limited to, those where PBGC cannot reasonably obtain the necessary data or inputs necessary to establish the fair market value, such as hedge funds, private equity funds and other hard to value assets.

The Financial Accounting Standards Board Accounting Standards Codification Section 820, *Fair Value Measurements and Disclosures* (ASC 820), establishes a framework for measuring fair value in accordance with accounting principles generally accepted in the United States of America (U.S. GAAP). Under PBGC's procedures, ''hard to value'' assets are generally Level 3 assets under the ''fair value'' hierarchy of ASC 820. Accordingly, to conform PBGC's regulations to current practice, PBGC has concluded that it would be appropriate to adopt the valuation methodologies of fair market value as defined in § 4001.2 of PBGC's regulation on Terminology or fair value in accordance with U.S. GAAP, as appropriate, for purposes of allocating assets, determining employer liability, and calculating net worth of liable persons. PBGC proposes to amend its asset allocation and employer liability regulations to achieve this result.

Applicability

The amendments under this proposed rule would apply to plan terminations initiated on or after the effective date of the final rule. However, most of the amendments codify policies and practices that PBGC has followed for many years, and PBGC will continue to follow those policies and practices in the interim.

Compliance With Rulemaking Guidelines

Executive Orders 12866, 13563, and 13771

PBGC has determined that this rule is not a ''significant regulatory action'' under Executive Order 12866 and Executive Order 13771. Accordingly, this proposed rule is exempt from Executive Order 13771, and the Office of Management and Budget has not reviewed the proposed rule under Executive Order 12866.

Executive Order 12866 directs agencies to assess all costs and benefits of available regulatory alternatives and, if regulation is necessary, to select regulatory approaches that maximize net benefits (including potential economic, environmental, public health and safety effects, distributive impacts, and equity).

Although this is not a significant regulatory action under E.O. 12866, PBGC has examined the economic and policy implications of this proposed rule and has concluded that there will be no significant economic impact as a result of the proposed amendments to PBGC's regulations. Most of the proposed amendments merely codify existing PBGC policies and practices. Making these policies and practices more transparent may decrease uncertainty among those affected by PBGC benefit determinations, reducing the need for inquiries, consultations or appeals. The proposed change to PBGC's regulation on valuation methodology should have no impact, because use of fair value instead of fair market value will not result in values that are regularly higher or lower; in other words, use of fair value may result in a slightly higher value in some cases and a slightly lower value in other cases.

Section 6 of Executive Order 13563 requires agencies to rethink existing regulations by periodically reviewing their regulatory program for rules that ''may be outmoded, ineffective, insufficient, or excessively burdensome.'' These rules should be modified, streamlined, expanded, or repealed as appropriate. PBGC has identified the proposed amendments to the regulations on benefit payments and allocation of assets as consistent with the principles for review under E.O. 13563. PBGC believes the proposed codification of policies on how benefits are paid provides clearer guidance to the public, and that the changes to the asset valuation rule streamline the valuation process and incorporate current actuarial best practices.

Regulatory Flexibility Act

The Regulatory Flexibility Act imposes certain requirements with respect to rules that are subject to the notice-and-comment requirements of section 553(b) of the Administrative Procedure Act and that are likely to have a significant economic impact on a substantial number of small entities. Unless an agency determines that a proposed rule is not likely to have a significant economic impact on a substantial number of small entities, section 603 of the Regulatory Flexibility Act requires that the agency present an initial regulatory flexibility analysis at the time of the publication of the proposed rule describing the impact of the rule on small entities and seeking public comment on such impact. Small entities include small businesses, organizations, and governmental jurisdictions.

For purposes of the Regulatory Flexibility Act requirements with respect to this proposed regulation,

[17] Section 4001.2 of PBGC's regulation on Terminology defines ''fair market value'' as ''the price at which property would change hands between a willing buyer and a willing seller, neither being under any compulsion to buy or sell and both having reasonable knowledge of relevant facts.''

PBGC considers a small entity to be a plan with fewer than 100 participants. This is substantially the same criterion PBGC uses in other regulations [18] and is consistent with certain requirements in title I of ERISA [19] and the Code,[20] as well as the definition of a small entity that the Department of Labor has used for purposes of the Regulatory Flexibility Act.[21]

Further, while some large employers that terminate plans may have small plans that terminate along with larger ones, in general most small plans are maintained by small employers. Thus, PBGC believes that assessing the impact of the final rule on small plans is an appropriate substitute for evaluating the effect on small entities. The definition of small entity considered appropriate for this purpose differs, however, from a definition of small business based on size standards promulgated by the Small Business Administration (13 CFR 121.201) pursuant to the Small Business Act. PBGC therefore requests comments on the appropriateness of the size standard used in evaluating the impact on small entities of the amendments to the benefit payments regulation to implement this proposed rule.

On the basis of its proposed definition of small entity, PBGC certifies under section 605(b) of the Regulatory Flexibility Act (5 U.S.C. 601 *et seq.*) that the amendments in this proposed rule would not have a significant economic impact on a substantial number of small entities. All or virtually all of the effect of this proposed rule will be on PBGC or persons who receive benefits from PBGC. Accordingly, as provided in section 605 of the Regulatory Flexibility Act, sections 603 and 604 do not apply.

List of Subjects

29 CFR Part 4022

Employee benefit plans, Pension insurance, Reporting and recordkeeping requirements.

29 CFR Part 4044

Employee benefit plans, Pension insurance.

29 CFR Part 4062

Employee benefit plans, Pension insurance, Reporting and recordkeeping requirements.

For the reasons given above, PBGC proposes to amend 29 CFR parts 4022, 4044, and 4062 as follows.

PART 4022—BENEFITS PAYABLE IN TERMINATED SINGLE-EMPLOYER PLANS

■ 1. The authority citation for part 4022 continues to read as follows:

Authority: 29 U.S.C. 1302, 1322, 1322b, 1341(c)(3)(D), and 1344.

■ 2. Amend § 4022.7 by, revising paragraphs (a) and (b), and removing the phrase ''is $5,000 or less'' and adding in its place ''does not exceed the dollar amount specified in section 203(e)(1) of ERISA'' in paragraph (d)(1).

The revisions read as follows:

§ 4022.7 Benefits payable in a lump sum.

(a) *Alternative benefit.* Except as provided in this part, PBGC pays benefits only in annuity form. If a benefit that is guaranteed under this part is payable in a lump sum or substantially so under the terms of the plan, including an option elected under the plan by the participant before plan trusteeship, PBGC will not guarantee the benefit in such form but instead will guarantee an actuarially equivalent life annuity.

(b) *Payment by PBGC*—(1) *Payment in lump sum.* Notwithstanding paragraph (a) of this section:

(i) *In general.* If the lump sum value of a benefit (or of an estimated benefit) payable by PBGC and calculated as of the termination date does not exceed the dollar amount specified in section 203(e)(1) of ERISA and the benefit is not yet in pay status as of the date PBGC becomes trustee, the benefit (or estimated benefit) may be paid in a lump sum.

(ii) *Annuity option.* If PBGC would otherwise make a lump sum payment in accordance with paragraph (b)(1)(i) of this section and the monthly benefit (or the estimated monthly benefit) is equal to or greater than $25 (at normal retirement age and in the normal form for an unmarried participant), PBGC will provide the option to receive the benefit in the form of an annuity.

(iii) *Deceased participants after plan termination.* If the lump sum value of a participant's benefit calculated as of the termination date does not exceed the dollar amount specified in section 203(e)(1) of ERISA, and the participant dies after the plan's termination date and before the benefit is in pay status, PBGC will treat the benefit as owed to the participant at the time of his or her death and the rules in subpart F of this part apply.

(iv) *Payment of de minimis QPSA as lump sum or annuity.* If the lump sum value of a participant's benefit calculated as of the termination date exceeds the dollar amount specified in section 203(e)(1) of ERISA, the lump sum value of annuity payments under the qualified preretirement survivor annuity (or under an estimated qualified preretirement survivor annuity) does not exceed that amount, and the participant dies after the plan's termination date and before the benefit is in pay status, then the qualified preretirement survivor annuity (or the estimated qualified preretirement survivor annuity) may be paid in a lump sum, or as an annuity, if available, and if elected by the surviving spouse. For example, if the value of the participant's benefit is $6,000 and the value of the qualified preretirement survivor annuity is $3,000, PBGC will pay the qualified preretirement survivor annuity as a lump sum, or as an annuity, if available, and if elected by the surviving spouse.

(v) *Payments to estates.* PBGC will pay any annuity payments payable to an estate in a lump sum without regard to the threshold in paragraph (b)(1)(i) of this section. PBGC will discount the annuity payments using the Federal mid-term rate (as determined by the Secretary of the Treasury pursuant to section 1274(d)(1)(C)(ii) of the Code) applicable for the month the participant died based on monthly compounding.

(2) *Return of employee contributions*—(i) *In general.* Notwithstanding any other provision of this part, PBGC will pay as a lump sum instead of as an annuity, the value of the portion of an individual's basic-type benefit derived from accumulated mandatory employee contributions, if payment in a lump sum is consistent with the plan's provisions and if the individual elects such payment either before or at the time he or she starts receiving annuity payments from PBGC for the remainder of his or her benefit. For purposes of this part, the portion of an individual's basic-type benefit derived from accumulated mandatory employee contributions is determined under § 4044.12 of this chapter (priority category 2 benefits), and the value of that portion is computed under the applicable rules contained in part 4044, subpart B of this chapter.

(ii) *Benefits in pay status.* If an individual is in pay status with an annuity as of the date the plan becomes trusteed, and if the individual did not elect to withdraw any accumulated

[18] See, *e.g.,* special rules for small plans under part 4007 (Payment of Premiums).

[19] See, *e.g.,* ERISA section 104(a)(2), which permits the Secretary of Labor to prescribe simplified annual reports for pension plans that cover fewer than 100 participants.

[20] See, *e.g.,* Code section 430(g)(2)(B), which permits plans with 100 or fewer participants to use valuation dates other than the first day of the plan year.

[21] *See, e.g.,* DOL's final rule on Prohibited Transaction Exemption Procedures, 76 FR 66637, 66644 (Oct. 27, 2011).

mandatory employee contributions, PBGC will not allow the individual to withdraw any portion of the benefit derived from accumulated mandatory employee contributions as a lump sum.

* * * * *

■ 3. Amend § 4022.8 by, removing the phrase ''This section applies where benefits are not already in pay status.'' from paragraph (a) introductory text, and revising paragraph (d).

The revision reads as follows:

§ 4022.8 Form of payment.

* * * * *

(d) *Change in benefit form.* Subject to benefit corrections in § 4022.9(d), once payment of a benefit starts, the benefit form cannot be changed, regardless of whether the participant or beneficiary was put into pay status by the plan before the date PBGC becomes trustee of the plan.

* * * * *

■ 4. Amend § 4022.9 by:

■ a. Revising the section heading;

■ b. Redesignating paragraph (d) as paragraph (e); and

■ c. Adding new paragraph (d).

The revision and addition read as follows:

§ 4022.9 Time of payment; benefit applications and corrections.

* * * * *

(d) *Benefit corrections.* PBGC may prescribe the time and manner for corrections of errors that affect benefit form and benefit starting dates.

* * * * *

■ 5. Amend § 4022.23 by:

■ a. Adding a sentence to the end of paragraph (a);

■ b. Redesignating paragraph (g) as paragraph (h);

■ c. Removing the phrase ''in paragraphs (c), (d), and (f) of this section'' and adding in its place ''in paragraphs (c), (d), (f), and (g) of this section'' in the first sentence of newly redesignated paragraph (h); and

■ d. Adding new paragraph (g).

The additions read as follows:

§ 4022.23 Computation of maximum guaranteeable benefits.

(a) * * * In the case of a partial plan distribution, the maximum guaranteeable monthly amount computed under this section will be reduced in accordance with paragraph (g) of this section.

* * * * *

(g) *Partial plan distribution*—(1) *General.* A partial plan distribution means a distribution (for example, a lump-sum payment or an annuity purchase) of a portion of the participant's accrued benefit under the plan. In the case of a lump-sum payment, the starting date of the partial plan distribution for purposes of this subsection is the date on which the lump-sum payment is made. In the event the participant has received a partial plan distribution, PBGC reduces the monthly maximum guaranteeable benefit amount computed under paragraphs (a) through (f) and (h) of this section as follows:

(i) In a case in which the partial plan distribution and the remainder annuity started on the same date, PBGC subtracts the monthly annuity equivalent of the partial plan distribution (generally determined as of the starting date of the distribution and using plan factors and assumptions) from the participant's monthly maximum guaranteeable benefit as of the termination date (or, if payments began after the termination date, as of the starting date of the partial plan distribution and the remainder annuity). If the starting dates were different but both occurred on or before the termination date, PBGC subtracts the monthly annuity equivalent of the partial plan distribution (generally determined as of the starting date of the partial plan distribution) from the participant's monthly maximum guaranteeable benefit as of the termination date.

(ii) In a case in which the partial plan distribution and the remainder annuity do not start on the same date, and in which the starting date of the remainder annuity occurs after the termination date, PBGC:

(A) Determines a percentage, by dividing the monthly annuity equivalent of the partial plan distribution (generally determined as of the starting date of the partial plan distribution and using plan factors and assumptions) by the participant's monthly maximum guaranteeable benefit as of the termination date (or, if the partial plan distribution occurred after the termination date, as of the starting date of the distribution); and then

(B) Reduces the participant's monthly maximum guaranteeable benefit applicable to the starting date of the remainder annuity by the percentage determined in paragraph (g)(1)(ii)(A) of this section.

(2) *Example.* Participant A received a lump-sum partial plan distribution that was equivalent to a straight-life annuity of $1,834.16 per month commencing on the date the distribution occurred. When the plan later terminates in 2016, Participant A is age 59 and has a monthly maximum guaranteeable benefit of $3,056.93 per month. PBGC determines a percentage with respect to the partial plan distribution as follows: $1,834.16/$3,056.93 = 60%. Five years after the termination date, Participant A starts his remainder annuity. By this date, Participant A's monthly maximum guaranteeable benefit (adjusted for age and benefit form as of the annuity starting date of the remainder annuity) is $4,660.56 per month, which PBGC reduces by 60 percent. Thus, PBGC will guarantee no more than $1,864.22 per month of Participant A's remainder annuity.

* * * * *

■ 6. Amend § 4022.93 by, revising the section heading and paragraph (a) introductory text and adding paragraph (d) to read as follows:

§ 4022.93 Who will get benefits PBGC may owe me at the time of my death?

(a) *In general.* Except as provided in paragraphs (b), (c), and (d) of this section, we will pay any benefits we owe you at the time of your death to the person(s) surviving you in the following order—

* * * * *

(d) *Lump sum payments to surviving spouses.* For a deceased participant whose benefit has a lump sum value not exceeding the dollar amount specified in section 203(e)(1) of ERISA, payment will be made to the surviving spouse (if any) if such spouse would otherwise be entitled to receive a qualified preretirement survivor annuity under section 205(a)(2) of ERISA, and the surviving spouse will receive highest priority under paragraph (a) of this section.

PART 4044—ALLOCATION OF ASSETS IN SINGLE—EMPLOYER PLANS

■ 7. The authority citation for part 4044 continues to read as follows:

Authority: 29 U.S.C. 1301(a), 1302(b)(3), 1341, 1344, 1362.

■ 8. Amend § 4044.10 by:

■ a. Redesignating the text of paragraph (b) as paragraph (b)(1);

■ b. Adding a subject heading for paragraph (b)(1); and

■ c. Adding paragraph (b)(2).

The additions read as follows:

§ 4044.10 Manner of allocation.

* * * * *

(b) *Assigning benefits*—(1) *In general.* * * *

(2) *Partial plan distribution.* A partial plan distribution means a distribution (for example, a lump-sum payment or an annuity purchase) of a portion of the participant's accrued benefit under the

plan. In the event the participant has received a partial plan distribution, PBGC adjusts the participant's benefits assigned to the priority categories under section 4044(a) of ERISA by:

(i) Determining the amount of the participant's benefit in each of the priority categories, treating the participant's total benefit as the sum of the partial plan distribution and remainder benefit; and

(ii) Reducing the otherwise applicable amount in the highest priority category in which the participant has benefits by the annuity equivalent of the partial plan distribution (generally determined as of the starting date of the remainder annuity, but no later than the plan's termination date, using plan factors and assumptions). If the amount of the partial plan distribution exceeds the benefit in the highest category, PBGC reduces the otherwise applicable amount in the next highest priority category by the excess.

* * * * *

■ 9. Amend § 4044.41 by revising paragraph (b) to read as follows:

§ 4044.41 General valuation rules.

* * * * *

(b) *Valuation of assets.* Plan assets generally will be valued at their fair market value as defined in § 4001.2 of this chapter. As appropriate, plan assets will be valued at their fair value in accordance with accounting principles generally accepted in the United States of America (U.S. GAAP).

PART 4062—LIABILITY FOR TERMINATION OF SINGLE—EMPLOYER PLANS

■ 10. The authority citation for part 4062 continues to read as follows:

Authority: 29 U.S.C. 1302(b)(3), 1362–1364, 1367, 1368.

■ 11. Amend § 4062.4 by revising paragraph (c) introductory text to read as follows:

§ 4062.4 Determinations of net worth and collective net worth.

* * * * *

(c) *Factors for determining net worth.* A person's net worth is to be determined on the basis of the factors set forth below in this section, to the extent relevant; different factors may be considered with respect to different portions of the person's operations. Generally, fair market value, as defined in § 4001.2 of this chapter, is to be used. As appropriate, fair value in accordance with accounting principles generally accepted in the United States of America (U.S. GAAP) is to be used.

Issued in Washington, DC.

Gordon Hartogensis,

Director, Pension Benefit Guaranty Corporation.

[FR Doc. 2019–21088 Filed 9–27–19; 8:45 am]

BILLING CODE 7709–02–P

FEDERAL COMMUNICATIONS COMMISSION

47 CFR Parts 1 and 17

[WT Docket No. 19–212; FCC 19–87]

Completing the Transition to Electronic Filing, Licenses and Authorizations, and Correspondence in the Wireless Radio Services

AGENCY: Federal Communications Commission.

ACTION: Proposed rule.

SUMMARY: This Notice of Proposed Rulemaking (NPRM) builds upon the Commission's recent efforts to modernize its legacy filing, communications, and information retention systems by improving electronic access to data and digitizing Commission communications in a wide variety of services. Specifically, this NPRM proposes to make all filings to the Universal Licensing System (ULS) completely electronic; expand electronic filing and correspondence elements for related systems; and require applicants to provide an email address on the FCC Forms related to these systems. This NPRM also seeks comment on additional rule changes that would further expand the use of electronic filing and electronic service. Together, these proposals will facilitate the remaining steps to transition these systems from paper to electronic, reducing regulatory burdens and environmental waste, and making interaction with these systems more accessible and efficient for those who rely on them.

DATES: Interested parties may file comments on or before October 30, 2019; and reply comments on or before November 14, 2019.

ADDRESSES: You may submit comments, identified by WT Docket No. 19–212, by any of the following methods:

▪ *Federal Communications Commission's website: http://apps.fcc.gov/ecfs/.* Follow the instructions for submitting comments.

▪ *People With Disabilities:* Contact the FCC to request reasonable accommodations (accessible format documents, sign language interpreters, CART, etc.) by email: *FCC504@fcc.gov* or phone: 202–418–0530 or TTY: 202–418–0432.

For detailed instructions for submitting comments and additional information on the rulemaking process, see the **SUPPLEMENTARY INFORMATION** section of this document.

FOR FURTHER INFORMATION CONTACT: Jessica Greffenius of the Wireless Telecommunications Bureau, Mobility Division, (202) 418–2986 or *Jessica.Greffenius@fcc.gov.*

For additional information concerning the Paperwork Reduction Act information collection requirements contained in this NPRM, contact Cathy Williams, Office of Managing Director, at (202) 418–2918 or *Cathy.Williams@fcc.gov* or email *PRA@fcc.gov.*

SUPPLEMENTARY INFORMATION:

Comment Filing Procedures

Pursuant to sections 1.415 and 1.419 of the Commission's rules, 47 CFR 1.415, 1.419, interested parties may file comments and reply comments on or before the dates indicated on the first page of this document. Comments may be filed using the Commission's Electronic Comment Filing System (ECFS). *See Electronic Filing of Documents in Rulemaking Proceedings,* 63 FR 24121 (1998).

▪ *Electronic Filers:* Comments may be filed electronically using the internet by accessing the ECFS: *http://apps.fcc.gov/ecfs/.*

▪ *Paper Filers:* Parties who choose to file by paper must file an original and one copy of each filing. If more than one docket or rulemaking number appears in the caption of this proceeding, filers must submit two additional copies for each additional docket or rulemaking number.

Filings can be sent by hand or messenger delivery, by commercial overnight courier, or by first-class or overnight U.S. Postal Service mail. All filings must be addressed to the Commission's Secretary, Office of the Secretary, Federal Communications Commission.

▪ All hand-delivered or messenger-delivered paper filings for the Commission's Secretary must be delivered to FCC Headquarters at 445 12th St. SW, Room TW–A325, Washington, DC 20554. The filing hours are 8:00 a.m. to 7:00 p.m. All hand deliveries must be held together with rubber bands or fasteners. Any envelopes and boxes must be disposed of *before* entering the building.

▪ Commercial overnight mail (other than U.S. Postal Service Express Mail and Priority Mail) must be sent to 9050 Junction Drive, Annapolis Junction, MD 20701.

▪ U.S. Postal Service first-class, Express, and Priority mail must be

addressed to 445 12th Street SW, Washington, DC 20554.

Initial Paperwork Reduction Analysis

This document contains proposed information collection requirements. The Commission, as part of its continuing effort to reduce paperwork burdens, invites the general public and the Office of Management and Budget (OMB) to comment on the information collection requirements contained in this document, as required by the Paperwork Reduction Act of 1995, Public Law 104–13. In addition, pursuant to the Small Business Paperwork Relief Act of 2002, Public Law 107–198, see 44 U.S.C. 3506(c)(4), the Commission seeks specific comment on how it might further reduce the information collection burden for small business concerns with fewer than 25 employees.

Initial Regulatory Flexibility Act Analysis

As required by the Regulatory Flexibility Act of 1980 (RFA), the Commission has prepared an Initial Regulatory Flexibility Analysis (IRFA) of the possible significant economic impact on small entities of the policies and rules proposed in the NPRM. It requests written public comment on the IRFA, contained at Appendix B to the NPRM. Comments must be filed in accordance with the same deadlines as comments filed in response to the NPRM as set forth on the first page of this document, and have a separate and distinct heading designating them as responses to the IRFA. The Commission's Consumer and Governmental Affairs Bureau, Reference Information Center, will send a copy of the NPRM, including the IRFA, to the Chief Counsel for Advocacy of the Small Business Administration.

Ex Parte Rules

The proceeding this NPRM initiates shall be treated as a ''permit-but-disclose'' proceeding in accordance with the Commission's *ex parte* rules.[1] Persons making *ex parte* presentations must file a copy of any written presentation or a memorandum summarizing any oral presentation within two business days after the presentation (unless a different deadline applicable to the Sunshine period applies). Persons making oral *ex parte* presentations are reminded that memoranda summarizing the presentation must (1) list all persons attending or otherwise participating in the meeting at which the *ex parte* presentation was made, and (2) summarize all data presented and arguments made during the presentation. If the presentation consisted in whole or in part of the presentation of data or arguments already reflected in the presenter's written comments, memoranda or other filings in the proceeding, the presenter may provide citations to such data or arguments in his or her prior comments, memoranda, or other filings (specifying the relevant page and/or paragraph numbers where such data or arguments can be found) in lieu of summarizing them in the memorandum. Documents shown or given to Commission staff during *ex parte* meetings are deemed to be written *ex parte* presentations and must be filed consistent with rule 1.1206(b). In proceedings governed by rule 1.49(f) or for which the Commission has made available a method of electronic filing, written *ex parte* presentations and memoranda summarizing oral *ex parte* presentations, and all attachments thereto, must be filed through the electronic comment filing system available for that proceeding, and must be filed in their native format (*e.g.,* .doc, .xml, .ppt, searchable .pdf). Participants in this proceeding should familiarize themselves with the Commission's *ex parte* rules.

Synopsis

ULS and Supporting Systems. The Commission manages applications for all wireless radio licenses through the ULS. Other systems accept filings and work in tandem with the ULS: The Antenna Structure Registration (ASR) System, the Tower Construction Notification System (TCNS), and the Electronic Section 106 (E–106) System. The ASR System ensures that physical structures used for wireless radio operations that are above a certain height or in close proximity to airports do not pose a hazard to aircraft. The TCNS and E–106 Systems advance the goal of the National Historic Preservation Act (NHPA) to protect historic properties, including Tribal religious and cultural sites. Specifically, the TCNS provides a mechanism for Tower Notifiers (applicants seeking to build a tower or collocate on a tower or consultants/entities representing them) to notify and communicate with Indian Tribes and Native Hawaiian Organizations (NHOs) regarding a proposed construction or collation, and the E–106 System works in conjunction with TCNS to enable real-time information referral and communication among the Commission, Tower Notifiers, and State Historic Preservation Officers (SHPOs). Collectively, these systems provide an efficient and transparent means to accept, review, and dispose of the Commission's wireless radio applications.

Today, the majority of applications filed in the ULS are electronic, as required by rule. Exceptions exist for the following services: (i) Part 90 Private Land Mobile Radio services for shared spectrum, spectrum in the public safety pool below 746 MHz, and spectrum in the public safety allocation above 746 MHz, except those filed by FCC-certified frequency coordinators; (ii) part 97 Amateur Radios Service, except those filed by Volunteer Examination Coordinators; (iii) part 95 General Mobile Service and Personal Radio Service, excluding 218–219 MHz service; (iv) part 80 Maritime Services, excluding VHF 156–162 MHz Public Coast Stations; (v) part 87 Aviation Services; (vi) part 13 Commercial Radio Operators (individual applicants only); and (vii) certain part 101 licensees who also fall under the exempted groups. 47 CFR 1.913(d)(1)(i)–(vii). Similarly, the overwhelming majority of ASR applications are filed electronically; however, applicants have the choice to file manually or electronically. TCNS is an electronic-only system, so all interactions with it are electronic by design. However, TCNS is a voluntary system; Tower Notifiers can, but are not required under any Commission rule, use TCNS as the vehicle to fulfill their obligation to identify and contact Indian Tribes and NHOs. Similarly, while Tower Notifiers can provide information to SHPOs via certain FCC Forms, there is no requirement that they use the E–106 system to submit these forms or otherwise file them electronically.

Correspondence with Applicants/Licensees. While the Commission corresponds electronically with applicants and licensees in some instances, there remains a large amount of paper communication generated by the ULS and its supporting systems. Across these systems, the relevant applications and FCC Forms provide an opportunity, but do not require, users to provide an email address as part of their contact information. The Wireless Telecommunications and Public Safety and Homeland Security Bureaus (the Bureaus) by practice send correspondence generated by these systems to applicants and licensees, such as copies of licenses, reminder letters, and other courtesy notices. The Bureaus send thousands of these letters via U.S. Postal Mail each year.

[1] 47 CFR 1.1200 *et seq.*

A. Mandatory Electronic Filing

ULS and ASR. In 1998, the Commission adopted mandatory electronic filing for some applications and related filings in the ULS. In doing so, it noted many benefits to mandatory electronic filing, including streamlining Wireless Radio Services (WRS) application processing, affording parties a quick and economical process to file applications, and making licensing information quickly and easily available to interested parties and the public. At the same time, the Commission recognized that ''some wireless services applicants or licensees might lack access not only to high quality telephone lines but also computers capable of submitting their applications electronically.'' *Biennial Regulatory Review—Amendment of Parts 0, 1, 13, 22, 24, 26, 27, 80, 87, 90, 95, 97, and 101 of the Commission's Rules to Facilitate the Development and Use of the Universal Licensing System in the Wireless Telecommunications Services, et al.,* Report and Order, 13 FCC Rcd 21027, 21040–43, paras. 21–25 (1998) (*1998 ULS Report and Order*). It thus adopted several exemptions to mandatory electronic filing for a limited group of filers in services that were not subject to licensing by auction and that consisted ''primarily of individuals, small businesses, or public agencies that may lack resources to convert quickly to electronic filing.'' *1998 ULS Report and Order,* 13 FCC Rcd at 21040, para. 20. The Commission noted that it would review this issue in the future and extend mandatory electronic filing if it found that it was ''operationally feasible and cost effective.'' *Id.*

Given the drastic changes that have occurred with regard to the ubiquity of the internet and increased personal computer access, we find it unlikely that electronic filing remains infeasible or cost-prohibitive for the previously exempted types of filers, or that they lack resources to file electronically. We therefore propose to eliminate section 1.913's exemptions to mandatory electronic filing. We seek comment on this proposal.

We note, however, that while the vast majority of ULS applications today are submitted electronically, some are still manually filed, largely from exempted filers.[2] Last year, for example, the Commission received about 5,000 manually filed applications out of about 425,000 total applications.[3] We seek comment on whether our underlying assumptions about the ease of electronic filing for the previously exempted filers are valid. Are there still categories of individuals or entities for which electronic filing may pose enough of a burden to outweigh the benefits, such as small entities, individuals with disabilities, or low-income individuals? If so, are any exemptions still warranted? Or is the Commission's waiver process sufficient to handle such instances?

We also propose to mandate electronic filing in the ASR System, which currently allows electronic filing of antenna structure registrations via FCC Form 854, but no Commission rule mandates electronic filing. We propose to revise sections 17.4 and 17.57 to specifically require electronic filing.[4] As with filings to the ULS, we anticipate that there are many benefits to relying exclusively on electronic registrations, with few costs to ASR registrants. We anticipate that electronic submission is less, not more, burdensome for applicants, as the Commission receives very few manual ASR submissions each year, evidencing that this option is unnecessary for the overwhelming majority of registrants. Notably, out of the 7,000 applications filed in the ASR System last year, only 15 were filed manually. We seek comment on this proposal, and on whether there remains a reason to allow paper filings in the ASR System under limited circumstances. If so, is the Commission's waiver process the appropriate vehicle to address such instances?

For both the ULS and ASR Systems, we seek comment on the amount of time we should provide for filers to prepare for the transition to mandatory electronic filing. Would six months be sufficient lead-time for licensees/applicants and registrants to convert their practices to electronic filing? Are there differences between the entities previously exempted from electronic ULS filings and entities that submit ASRs manually that might warrant different timelines for the respective transitions?

We also seek comment on whether the Commission's rules for filing electronic pleadings related to applications filed in the ULS and the ASR System—*e.g.,* petitions to deny, petitions for reconsideration, applications for review, and status reports—also should be revised to require electronic filing. Most pleadings already can be filed electronically via the ''Submit Pleading'' link in ULS. We seek comment on whether to make electronic submission of ULS and ASR-related pleadings mandatory, to the extent they are not already. Additionally, some general Commission rules that apply to ULS and ASR applications as well as to other proceedings require service on other parties, and service must be manual, unless the party agrees otherwise. Should we revise these service requirements to permit a party to serve pleadings on other parties electronically? For proceedings in which all electronic filings are publicly available, does electronic filing itself provide sufficient notice to parties interested in the proceeding that it should be sufficient to constitute service on other parties? Should we also require or encourage that requests by members of the public for environmental review of ASR towers, and pleadings or comments related to those requests, be filed and/or served electronically? Or should we exempt certain members of the public, some of whom may, for example, live in remote areas with limited electronic or internet access, from mandatory electronic filing and/or service when they wish to file requests for environmental review or other complaints and participate in pleading cycles? Is the Commission's waiver process an appropriate vehicle to address such instances? What are the costs and benefits of each option?

TCNS and the E–106 System. Tower Notifiers that choose to use TCNS file proposed construction notices electronically. What steps could we take to encourage Tower Notifiers to use TCNS to fulfill their obligation to notify and respond to Indian Tribes and NHOs? Under the Nationwide Programmatic Agreement Regarding the Section 106 National Historic Preservation Act Review Process (NPA), Indian Tribes and NHOs may elect to receive notices and associated information from TCNS in accord with their reasonable communications preference, which may include U.S. or

[2] There are a few limited categories of submissions that the ULS cannot handle electronically and that must be filed and processed manually: Two-step transactions, subleases, leases contingent on assignments, and STAs in certain market-based services.

[3] About one-third of these manual filings are from Private Land Mobile Radio filers, and about one-third are Amateur Radio Service filings. Manually filed applications also include those from filers who sought and received a waiver of the electronic filing rule, or whose applications fall in the limited category that cannot be processed electronically in ULS.

[4] We also take this opportunity to correct a typographic error in sections 17.4(c)(1)(ii) and 17.4(c)(1)(iv), which incorrectly refers to ''paragraph I(C)(1)–(3)''and instead should refer to ''I(E)(1)–(3)'' for the definition of ''Substantial increase in the size of the tower'' in the Nationwide Programmatic Agreement for the Collocation of Wireless Antennas, 47 CFR Pt. 1, Appx. B, Section I(E)(1)–(3).

Express Mail.[5] What would incentivize Tribes and NHOs to receive information and complete their reviews electronically using TCNS, and what steps can the Commission take to remove barriers, make it easier, or otherwise encourage them to do so?

As part of the state historic review process of tower proposals, Tower Notifiers can provide information to State Historic Preservation Officers (SHPOs) electronically by submitting the relevant FCC Forms using either the Commission's electronic system (E–106) or a SHPO-created database. Tower Notifiers also have the option to send these forms and other communications via U.S. or Express mail. We propose to require that Tower Notifiers that chose to use the E–106 System submit FCC Forms 620 and 621 electronically, and that all of the Tower Notifiers' communications associated with the review process be made electronically. We seek comment on this approach. Because E–106 is an electronic system, all filings made by SHPOs in response to tower proposals into the system are inherently electronic. However, SHPOs are not required to use the system,[6] and a large number of them do not: Currently, just 19 out of 59 SHPOs review tower projects via this system. We seek comment on what steps we could take to encourage SHPOs to participate in our electronic system and complete their reviews without the need for paper mail. Are there any scenarios where E–106 users might need to communicate with physical mail? We seek comment on any other changes we could make to the E–106 system itself or the review process that could reduce or eliminate the use of paper.

Other Issues To Consider. Are there other situations involving the ULS and ASR System that we have not considered where electronic filing could be used? If a rule is silent on how a filing or communication should be made in connection with ULS, ASR, TCNS, or E–106, should we (subject to the limitations discussed herein) revise the rule to require an electronic filing or communication? Are there other conforming or related rule changes that the Commission should consider to facilitate these transitions? Are there other implementation issues we should consider? For example, do we need to make any changes with regard to how we handle confidential information submitted to these systems, including sensitive information submitted by Tribes? Are there any accessibility-related issues we should be aware of that could impact our finalizing the transition to electronic filings? We note that we will continue to meet our requirement to provide accommodations for people with disabilities, and seek comment on how best to ensure compliance with the requirements of Sections 504 and 508 of the Rehabilitation Act of 1973, or any other relevant statute, in requiring electronic filing.

Currently, if an application that is required to be filed electronically is manually filed without a waiver request, the Commission's practice has been to dismiss the application as defective. We propose, and seek comment on, using the same approach going forward.

B. Email Address for Applications, Registrations, and Notifications

It is currently optional—not mandatory—for applicants, licensees, registrants, Tower Notifiers, and people who otherwise use these systems to provide an email address on the relevant FCC Forms submitted to these systems. Through this optional process, we have an email address on file for roughly 60% of the more than 2.2 million active WRS licenses.[7] To increase this number and finalize our transition to electronic correspondence and outgoing notices from these systems, we propose to require inclusion of an email address on all applications and associated FCC Forms for ULS, ASR, and TCNS/E–106. To accomplish this goal, we propose to update the respective electronic FCC Forms to require inclusion of an email address going forward. This change will be implemented as soon as feasible, based on completing any requisite updates to our electronic systems, and on any necessary Paperwork Reduction Act approval from the Office of Management and Budget.

We note that section 1.934 of our rules allows us to dismiss an application as defective if it is incomplete with respect to required answers to questions. Thus, once inclusion of an email address is mandatory on the respective FCC Forms, the Commission may dismiss as defective an application if an email address is not included. We also propose to amend section 1.923(i) of the Commission's rules—which requires applications to specify a U.S. Postal Mail address—to require that applications also specify an email address, and seek comment on this proposal. Alternatively, should we remove section 1.923(i) as unnecessary, given that the appropriate FCC Forms will require both U.S. Postal Mail and email addresses going forward? Should we also require an email address on all pleadings related to applications and filings in these systems? Are there other rule changes that may be warranted to make furnishing an email address mandatory within these systems? For example, section 1.5 of the Commission's rules requires licensees and applicants for a license to provide the Commission with an address where the Commission can direct correspondence. Should we revise this rule, or others, to reference email addresses?

We also seek comment on how to ensure that applicants, licensees, and registrants keep their email addresses up-to-date. Are changes to the Commission's existing rules about keeping contact information current sufficient to encompass email addresses? Should the Commission add ''change of an email address'' to the non-exhaustive list of minor modifications in section 1.929(k)? What changes to our rules might we need to ensure that entities with registered antenna structures in the ASR System keep email addresses current? Should we require ASR users to keep their contact information, including email addresses, current at all times? Are there reasons why we should not adopt such a requirement? Are there other ways to ensure that the Commission has accurate, up-to-date, email addresses associated with applications, licenses, and registrations across these electronic systems? Are there other ways to provide convenient means and appropriate incentives to ensure we have accurate, up-to-date email addresses? Notwithstanding that our WRS licensing data is public, are there possible privacy issues related to the collection of email addresses, and if so, how could we best address them? Currently, email addresses provided to ULS are publicly available, with certain exceptions.[8] Should we continue using

[5] The NPA requires the Commission and our applicants to communicate in a manner consistent with the reasonable wishes of Indian Tribes or NHOs. 47 CFR part 1, Appx. C § IV(C), (D) and (E). For more details on the NPA and the Commission's TCNS process, see *https://www.fcc.gov/wireless/systems-utilities/tower-construction-notifications.*

[6] As with TCNS, use of E–106 is voluntary. The system was designed to save users time and resources by automating and expediting the exchange of information and correspondence in the Section 106 process.

[7] This includes WRS licenses for which there is a licensee email address, a point-of-contact email address, or both.

[8] The public facing ULS masks email addresses, phone numbers, and fax numbers connected to licenses in the Amateur Radio Service, Aircraft Radio Service, Commercial Radio Operators Services, Ship Radio Service, and the General Mobile Radio Service (GMRS).

this approach going forward? If the Commission were to continue masking email addresses for certain categories of licensees, how would that affect electronic service of documents on third parties?

C. Electronic Notices, Correspondence, and Alerts

ULS and ASR. The Bureaus took steps in 2014 and 2016 to reduce the amount of paper correspondence generated by the ULS and ASR System. First, the Bureaus converted to official electronic records for authorizations, mailing hard copies of such authorizations only when an entity ''opted in.'' Second, they eliminated several categories of notices generated by these systems and sent to users through the U.S. Postal Service. The Bureaus cited several benefits to electronic correspondence, including saving money in terms of staff resources, paper supplies, and mailing costs, and eliminating the risk of notices getting lost or damaged in delivery.

Despite these initial steps, the ULS and ASR System still generate thousands of authorizations and letters each year that are sent via U.S. Postal Mail. Notwithstanding that official copies can be accessed electronically and downloaded, the Bureaus printed and mailed over 60,000 specifically requested hard copy authorizations each year for the past three years. In about 80% of these instances, the relevant Bureau had an email address on file for the entity to which it mailed the hard copy authorization. We propose to eliminate requests for the Bureaus to mail hard copies of these authorizations, given that users can access and download their official authorizations, leases, and registrations from the ULS and ASR System at any time.

In addition to authorizations, the Commission prints and mails hard copies of thousands of letters from the ULS and ASR System to licensees/applicants and registrants each year. For example, in 2018, the Commission printed more than 20,000 dismissal letters; more than 13,000 return letters; over 8,000 cancellation letters; about 4,000 termination letters; and roughly 4,500 letters notifying owners of registered towers of an application to change ownership. 90% of the time, the Bureaus had an email address on file for the entities receiving these letters. We propose to send these types of letters electronically using the email address on file (once applicants/licensees and registrants are required to update their contact information to include email addresses, as discussed in Part B above). We seek comment on this proposal, and on whether there is a need to maintain U.S. Postal Mail-delivered correspondence for certain categories of notices, or to certain types of recipients. Should the Commission maintain an option for licensees, applicants, and registrants to receive paper letters on a case-by-case basis? Is the Commission's waiver process sufficient to deal with any case-specific need for paper mailings? What are the costs and benefits of maintaining this option?

We also seek comment on the various implementation issues raised by transitioning to email correspondence. For example, how many email addresses should we allow on file for each licensee, applicant, registrant, Tower Notifier, or other user of systems affected by these proposed changes? Should the user be able to designate which email address is the ''primary'' address for all, or for certain types, of correspondence, or should all notices be sent to every email address on file? Must the email include the actual substance of the communication (*e.g.,* an electronic copy of a dismissal letter), or could the email simply alert the user to log in to the respective system to check an electronic mailbox or administrative tab that hosts the electronic correspondence? What other vehicles of electronic communication might be an option? We note, for example, that some court systems rely on online portals for electronic communications. Commenters arguing in favor of a specific vehicle or approach to email delivery should address the costs, benefits, and feasibility of the Commission implementing the approach.

Today, about 10% of the letters we deliver by U.S. Postal Mail are returned as undeliverable. When this occurs, the Bureaus will check for any error (*e.g.,* misspelling) and attempt to send the letter a second time. Should we use the same practice for emails that get bounced back as undeliverable (*i.e.,* attempt to deliver twice)? If not, what approach might make sense for undeliverable electronic mail? Should there be an alert in the ULS and ASR System to let users know that a notice was sent to their on-file email address, with an electronic copy also available within those systems? Should the Bureau provide instructions or other assistance to licensees and applicants in advance of this transition, to help ensure that the recipient's email program will not block or filter Commission emails? What should be the consequence if an entity is not aware of a notice or other communication from the Bureaus because it failed to ensure its email program will not block or filter Commission emails or failed to keep its email address current? Are there other technical issues we should keep in mind as we transition to electronic correspondence?

The Bureaus also print and mail more than 60,000 hard copy courtesy letters a year, such as letters reminding licensees of important dates like renewal and construction deadlines. We seek comment on whether courtesy letters remain necessary or could be eliminated. If recipients continue to find them helpful, should we transition to sending courtesy letters via email, or would a different method of online alerting be more efficient or useful to convey important deadlines? For example, would it be helpful to receive online alerts about important deadlines in a tab or mailbox within the ULS and ASR System? If we were to start using an online alerting mechanism, are there additional categories of alerts that we should include, besides important deadlines and, for the ASR System, tower ownership changes? If so, what kind of additional alerts would be beneficial? Should the Commission send notifications to ASR applicants completing the environmental notification process, such as determinations, dispositions, and Findings of No Significant Impact (FONSIs), by electronic means only? If so, should there be an option within the system for applicants to print all or some of these notifications?

What is the appropriate timeframe for the transition of the ULS and ASR System to electronic correspondence and electronic alerts? How long after the Commission requires an email address associated with its applications should it begin using the on-file email addresses for notices and correspondence?

TCNS and E–106 System. The Bureaus printed and mailed nearly 38,000 letters last year related to the TCNS/E–106 historic preservation process. Within the limits of the NPA, which allows Indian Tribes and NHOs to choose their preferred form of communication with the Commission and Tower Notifiers, we seek comment on how to incentivize the use of electronic correspondence with Indian Tribes and NHOs to the maximum extent possible in connection to their involvement with these systems, and on what steps the Commission could take to remove barriers that might prevent their doing so. We seek comment on the same implementation, technical, and mechanical issues discussed above with respect to the ULS and ASR System. We also seek comment on the appropriate amount of time to allow for this transition.

List of Subjects

Administrative practice and procedure; Reporting and recordkeeping requirements.

Federal Communications Commission.

Marlene Dortch,

Secretary.

For the reasons discussed in the preamble, the Federal Communications Commission proposes to amend parts 1 and 17 of Title 47 of the Code of Federal Regulations as follows:

PART 1—PRACTICE AND PROCEDURE

■ 1. The authority citation for part 1 is revised to read as follows:

Authority: 47 U.S.C. chs. 2, 5, 9, 13; 28 U.S.C. 2461 note, unless otherwise noted.

§ 1.913 [Amended]

■ 2. In § 1.913 remove and reserve paragraph (d).

■ 3. In § 1.923 revise paragraph (i) to read as follows:

§ 1.923 Content of applications.

* * * * *

(i) Unless an exception is set forth elsewhere in this chapter, each applicant must specify *an email address* and a United States Postal Service address for the Commission to serve documents or direct correspondence to the applicant.

PART 17—CONSTRUCTION, MARKING, AND LIGHTING OF ANTENNA STRUCTURES

■ 4. The authority citation for part 17 continues to read as follows:

Authority: 47 U.S.C. 154, 301, 303, 309.

■ 5. Amend § 17.4 by revising paragraphs (b), (c)(1)(ii), (c)(1)(iv), and (e) to read as follows:

§ 17.4 Antenna structure registration.

* * * * *

(b) Except as provided in paragraph (e) of this section, each owner of an antenna structure described in paragraph (a) of this section must file FCC Form 854 with the Commission. *FCC Form 854, and all related amendments, modifications, and attachments, including environmental assessments, shall be filed electronically.* Additionally, each owner of a proposed structure referred to in paragraph (a) of this section must submit a valid FAA determination of ''no hazard.'' In order to be considered valid by the Commission, the FAA determination of ''no hazard'' must not have expired prior to the date on which FCC Form 854 is received by the Commission. The height of the structure will be the highest point of the structure including any obstruction lighting or lightning arrester. If an antenna structure is not required to be registered under paragraph (a) of this section and it is voluntarily registered with the Commission after the effective date of this rule, the registrant must note on FCC Form 854 that the registration is voluntary. Voluntarily registered antenna structures are not subject to the lighting and marking requirements contained in this part.

(c) * * *

(1) * * *

(ii) For a reduction in height of an antenna structure or an increase in height that does not constitute a substantial increase in size as defined in paragraph I(*E*)(1)–(3) of Appendix B to part 1 of this chapter, provided that there is no construction or excavation more than 30 feet beyond the existing antenna structure property;

* * * * *

(iv) For replacement of an existing antenna structure at the same geographic location that does not require an Environmental Assessment (EA) under § 1.1307(a) through (d) of this chapter, provided the new structure will not use a less preferred lighting style, there will be no substantial increase in size as defined in paragraph I(*E*)(1)–(3) of Appendix B to part 1 of this chapter, and there will be no construction or excavation more than 30 feet beyond the existing antenna structure property;

* * * * *

■ 6. Revise § 17.57 to read as follows:

§ 17.57 Report of radio transmitting antenna construction, alteration, and/or removal.

The owner of an antenna structure for which an Antenna Structure Registration Number has been obtained must notify the Commission within 5 days of completion of construction by filing FCC Form 854–R and/or dismantlement by filing FCC Form 854. The owner must also notify the Commission within 5 days of any change in structure height or change in ownership information by filing FCC Form 854. *FCC Forms 854 and 854–R, and all related amendments, modifications, and attachments, shall be filed electronically.*

[FR Doc. 2019–20527 Filed 9–27–19; 8:45 am]

BILLING CODE 6712–01–P

Notices

Federal Register

Vol. 84, No. 189

Monday, September 30, 2019

This section of the FEDERAL REGISTER contains documents other than rules or proposed rules that are applicable to the public. Notices of hearings and investigations, committee meetings, agency decisions and rulings, delegations of authority, filing of petitions and applications and agency statements of organization and functions are examples of documents appearing in this section.

DEPARTMENT OF AGRICULTURE

Food and Nutrition Service

Agency Information Collection Activities: Proposed Collection; Comments Request—Survey of SNAP and Work

AGENCY: Food and Nutrition Service (FNS), USDA.

ACTION: Notice.

SUMMARY: In accordance with the Paperwork Reduction Act of 1995, this notice invites the general public and other public agencies to comment on this proposed information collection for the Survey of Supplemental Nutrition Assistance Program (SNAP) and Work. This NEW information collection will provide the U.S. Department of Agriculture, Food and Nutrition Service (FNS) with information about the employment patterns and characteristics of nondisabled adult SNAP participants, and identify health, social, and personal factors that promote or inhibit employment among SNAP participants.

DATES: Written comments must be received on or before November 29, 2019.

ADDRESSES: Comments may be sent to: Michael Burke, Social Science Research Analyst, Food and Nutrition Service, USDA, 3101 Park Center Drive, Room 1014, Alexandria, VA 22302. Comments may also be submitted via fax to the attention of Michael Burke at (703) 305–4369 or via email to *michael.burke@usda.gov.* Comments will also be accepted through the Federal eRulemaking Portal. Go to *http://www.regulations.gov* and follow the online instructions for submitting comments electronically.

All written comments will be open for public inspection at the office of the Food and Nutrition Service during regular business hours (8:30 a.m. to 5:00 p.m. Monday through Friday) at 3101 Park Center Drive, Alexandria, Virginia 22302.

All responses to this notice will be summarized and included in the request for Office of Management and Budget approval. All comments will be a matter of public record.

FOR FURTHER INFORMATION CONTACT: Requests for additional information or copies of this information collected should be directed to Michael Burke by email at *michael.burke@usda.gov* or by phone at (703) 305–4369.

SUPPLEMENTARY INFORMATION: Comments are invited on the following topics: (1) Whether the proposed collection of information is necessary for the proper performance of the functions of the agency, including whether the information shall have practical utility; (2) the accuracy of the agency's estimate of the burden on the proposed collection of information, including the validity of the methodology and assumptions that were used; (3) ways to enhance the quality, utility, and clarity of the information collected; and (4) ways to minimize the burden of the collection of information on those who are to respond, including use of appropriate automated, electronic, mechanical, or other technological collection techniques or other forms of information technology (IT).

Title: Survey of SNAP and Work.

Form Number: Not applicable.

OMB Number: 0584–NEW.

Expiration Date: Not Yet Determined.

Type of Request: New information collection.

Abstract: SNAP is the largest of the nutrition assistance programs administered by the Food and Nutrition Service (FNS) of the U.S. Department of Agriculture. It is the primary policy mechanism to provide a nutrition safety net and reduce food insecurity among low-income Americans by increasing access to healthy foods. In Fiscal Year (FY) 2018, SNAP served 39.6 million people with an average monthly benefit of $126.96 per person.

About one-third of SNAP households have earnings from employment. However, FNS knows few details about current job characteristics and work histories of adults participating in SNAP. The *Survey of SNAP and Work* will provide FNS with a better understanding of current and past workforce participation characteristics among nondisabled adult SNAP participants. The survey of current SNAP participants ages 18 to 69 will provide information on employment status, length of workforce detachment, types of job held, education and training, and social, physical, and environmental barriers to work, with estimates at the national and state-levels. The six study objectives include:

- Produce descriptive statistics on sociodemographic and economic characteristics.
- Produce descriptive statistics on employment status and employment characteristics.
- Produce descriptive statistics on length of detachment from the workforce.
- Produce descriptive statistics on education and training.
- Produce descriptive statistics on health, social, and personal factors related to employment.
- Examine the individual associations between key characteristics and employment status adjusted for other relevant characteristics.

A two-tiered sample design that yields state level samples of non-disabled SNAP participants ages 18 through 69 will be used to address the six study objectives. SNAP participants will be selected using administrative data from State SNAP agencies. In the first stage, primary sampling units (PSUs) in each State and the District of Columbia (DC) will be randomly selected with probability proportional to the number of SNAP participants. At the second stage, nondisabled SNAP participants ages 18 to 69 in each PSU will be randomly sampled. State samples will be aggregated to obtain National-level estimates.

Affected Public: Respondent groups identified include: (1) Non-disabled individuals ages 18 through 69 that received SNAP benefits in a specific sampling month, and (2) 51 State SNAP agencies. SNAP participants include all SNAP participants living in SNAP households and eligible to receive SNAP benefits.

Estimated Number of Respondents: (88,434). The total estimated number of individuals/households (I/H) SNAP participation respondents initially contacted is 88,383 SNAP participants. Out of the initial number of I/H contacted 39,780 respondents will be surveyed. In addition, 51 State SNAP Agencies (including the District of

Columbia) will be asked to provide caseload data only once to support development of the survey sampling frame. All 51 are expected to respond.

Estimated Number of Responses per Respondent: The estimated number of responses 3.8 per SNAP participant respondent. The survey will be administered only once. The estimated number of responses per state SNAP agency is six.

Estimated Total Annual Responses: The estimate total annual responses is 119,361, of which 70,707 are survey respondents, 48,603 are survey non-respondents, and 51 are state agency respondents.

Estimated Time per Response: Based on pretesting of the survey instrument, the estimated time of response for SNAP participants will vary from 12 minutes to 69 minutes, with an overall average of 33 minutes (0.55 hours). SNAP participants with multiple jobs over the reference period will require more time to complete the survey than participants with one job or no jobs. The estimated time of response for State SNAP agencies is 4.3 hours.

Estimated Total Annual Burden on Respondents: The total public reporting burden for this collection of information is estimated at 37,170 hours (annually). See Table 1 (Total Public Burden Hours) for estimated total annual burden for each type of respondent.

Estimated Annual Burden Hours: The estimated annual burden hours is 37,170.

TABLE A–2—TOTAL PUBLIC BURDEN HOURS

Type of respondents	Instruments and activities	Sample size	Number of respondents	Frequency of response	Total annual responses	Hours per response	Annual burden (hours)	Number of non-respondents	Frequency of response	Total annual responses	Hours per response	Annual burden (hours)	Grand total annual burden estimate (hours)
SNAP participant	Invitation letter	88,383	70,707	1	70,707	0.0167	1,181	17,676	1	17,676	0.0167	295	1,476
	Survey brochure (to be sent with invitation letter).	88,383	70,707	1	70,707	0.0833	5,890	17,676	1	17,676	0.0833	1,472	7,362
	Survey reminder postcard—1st.	64,874	58,387	1	58,387	0.0167	975	6,487	1	6,487	0.0167	108	1,083
	Survey reminder postcard—2nd.	65,169	63,103	1	63,103	0.0167	1,054	2,066	1	2,066	0.0167	35	1,088
	Guide for telephone call.	56,596	17,677	1	17,677	0.0500	884	38,919	1	38,919	0.0500	1,946	2,830
	Thank you letter early response.	9,945	9,945	1	9,945	0.0167	166	0	0	0	0.0167	0	166
	Thank you letter	29,835	29,835	1	29,835	0.0167	498	0	0	0	0.0167	0	498
	Field locating letter	13,258	8,618	1	8,618	0.0167	144	4,640	1	4,640	0.0167	77	221
	Sorry I missed you card.	6,894	5,170	1	5,170	0.0167	86	1,724	1	1,724	0.0167	29	115
	Guidelines for in-field recruitment.	4,653	4,375	1	4,375	0.0500	219	278	1	278	0.0500	14	233
	Participant survey	88,383	39,780	1	39,780	0.5500	21,879	48,603	0	0	0.5500	0	21,879
	Total	88,383	70,707	1	70,707		32,976	48,603	1	48,603		3,977	36,952
State SNAP Agency	FNS email to agency.	51	51	1	51	0.0167	1	0	0	0	0.0167	0	1
	Email request for call.	51	51	1	51	0.0167	1	0	0	0	0.0167	0	1
	Fact sheet	51	51	1	51	0.0333	2	0	0	0	0.0333	0	2
	Call script	51	51	1	51	0.1667	9	0	0	0	0.1667	0	9
	Email to request data.	51	51	1	51	0.0333	2	0	0	0	0.0333	0	2
	Preparations and sending data.	51	51	1	51	4.0000	204	0	0	0	4.0000	0	204
	Total	51	51	1	51		219	0	0	0		0	219
COMBINED TOTAL.	88,434		70,758	1	70,758		33,193	48,603	1	48,603		3,977	37,170

Dated: September 16, 2019.

Pamilyn Miller,

Administrator, Food and Nutrition Service.

[FR Doc. 2019–21170 Filed 9–27–19; 8:45 am]

BILLING CODE 3410–30–P

DEPARTMENT OF AGRICULTURE

Forest Service

Proposed New Recreation Fees: George Washington and Jefferson National Forests

AGENCY: Forest Service, USDA.

ACTION: Notice of proposed new recreation fees.

SUMMARY: The George Washington and Jefferson National Forests is proposing to charge new fees at three recreation sites. Recreation fees are assessed based on the level of amenities and services provided, cost of operation and maintenance, analysis of other providers, and public comment. The fees listed are only proposed and will be determined upon further analysis and public comment. Funds from fees would be used for the continued operations of these campgrounds, maintenance, and improvements.

DATES: Comments on the fee changes will be accepted through October 15, 2019. The fees will become available pending a recommendation from the Southern Region Recreation Resource Advisory Committee. If approved by the Regional Forester, implementation of new fees will occur no sooner than 180 days from the date of publication in the **Federal Register**.

ADDRESSES: Written comments concerning this notice should be addressed to the Supervisor's Office at: Joby P. Timm, Forest Supervisor, George Washington and Jefferson National Forests, 5162 Valleypointe Parkway, Roanoke, VA 24019, Attention Recreation Fee Coordinator.

FOR FURTHER INFORMATION CONTACT: Ginny Williams, Recreation Fee Coordinator, 540–265–5166. Information about proposed fee changes can also be found on the George Washington and Jefferson National Forests website: *https://www.fs.usda.gov/gwj.*

SUPPLEMENTARY INFORMATION: Under the proposed new fee structure, Little Fort, The Pines and Wolf Gap Campgrounds will be available for overnight camping for a fee. An analysis of campgrounds with similar amenities in the areas surrounding these recreation sites indicates that the proposed fees of $12

to $14 per night are comparable and reasonable.

All three campgrounds offer designated campsites with a parking spur, tent pad, picnic table and fire ring with cooking grill. The campgrounds each have at least one information kiosk, vault toilet building, interior gravel or paved campground road, and informational signs. The Pines Campground has trash receptacles and trash removal service. Campers are responsible for removing their trash from Little Fort and Wolf Gap Campgrounds. Currently, none of the campgrounds offer drinking water.

All three of these campgrounds offer direct access to several outdoor recreation opportunities. Little Fort is adjacent to a motorized trail system and near non-motorized trails and a mountaintop observation tower. Wolf Gap Campground on the Virginia/West Virginia border offers access to several highly popular non-motorized trails. The Pines Campground is located adjacent to a challenging four-wheel drive road on one side and the designated Barbour's Creek Wilderness on another. A stocked trout stream runs by The Pines as well. Recreation fees would be combined with other funds to support continued operations and maintenance of these campgrounds that support visitor enjoyment of national forest recreation opportunities.

Currently all three campgrounds are fee free recreation sites. A camping fee of $12 to $14 per site per night would be required. Additional amenities are proposed for the facilities including establishing a host campsite at The Pines, repairing the water system and reintroducing drinking water at The Pines and at Wolf Gap, and rehabilitating campsites and the interior campground road at Little Fort. Site features such as picnic tables, signs, and information kiosks will be repaired or replaced as needed.

The Federal Recreation Lands Enhancement Act (Title VII, Pub. L. 108–447) directed the Secretary of Agriculture to publish a six-month notice in the **Federal Register** whenever new recreation fee areas are established.

Once public involvement is complete, these new fees will be reviewed by the Southern Region Recreation Resource Advisory Committee prior to a final decision and implementation. These sites have all the required features to allow a fee to be charged. Those features include designated parking area, interpretive information and signing, permanent toilets, increased patrols, picnic table, and trash services. These standard amenity fee sites will honor the full suite of Interagency Passes.

Once public involvement is complete, these new fees will be reviewed by the Southern Region Recreation Resource Advisory Committee prior to a final decision and implementation.

Dated: August 29, 2019.

Richard A. Cooksey,

Acting Associate Deputy Chief, National Forest System.

[FR Doc. 2019–21164 Filed 9–27–19; 8:45 am]

BILLING CODE 3411–15–P

DEPARTMENT OF COMMERCE

International Trade Administration

[A–823–815]

Oil Country Tubular Goods From Ukraine: Preliminary Results of the First Five-Year Sunset Review of the Antidumping Duty Order

AGENCY: Enforcement and Compliance, International Trade Administration, Department of Commerce.

SUMMARY: On June 4, 2019, the Department of Commerce (Commerce) initiated the first sunset review of the antidumping duty (AD) order on oil country tubular goods (OCTG) from Ukraine. Commerce determined that it was appropriate to conduct a full review. Commerce preliminarily finds that revocation of this AD order would be likely to lead to continuation or recurrence of dumping at the levels indicated in the ''Preliminary Results of Review'' section of this notice.

DATES: Applicable September 30, 2019.

FOR FURTHER INFORMATION CONTACT: Lauren Caserta or Mark Hoadley, AD/CVD Operations, Office VII, Enforcement and Compliance, International Trade Administration, U.S. Department of Commerce, 1401 Constitution Avenue NW, Washington, DC 20230; telephone (202) 482–4737 or (202) 482–3148, respectively.

SUPPLEMENTARY INFORMATION:

Background

On June 4, 2019, Commerce initiated the sunset review of the agreement suspending the AD investigation on OCTG from Ukraine, pursuant to section 751(c) of the Tariff Act of 1930, as amended (the Act).[1] Subsequent to the initiation of the sunset review, the suspension agreement on OCTG from Ukraine was terminated and an AD order was issued, effective July 10, 2019.[2] As section 751(c) of the Act provides for sunset reviews of an AD order or a notice of a suspended investigation, Commerce concludes that continuing the sunset review of the *Order* despite the termination of the suspension agreement is contemplated by the Act.

Commerce received notices of intent to participate from Benteler Steel/Tube (Benteler), Boomerang Tube, LLC (Boomerang), IPSCO Tubulars, Inc. (IPSCO), Vallourec Star, LP (Vallourec), Welded Tube USA Inc. (Welded Tube USA), Maverick Tube Corporation (Maverick), Tenaris Bay City, Inc. (Tenaris Bay), and the United States Steel Corporation (U.S. Steel) (collectively, the domestic interested parties), and Interpipe and North American Interpipe, Inc. (collectively, Interpipe) within the deadline specified in 19 CFR 351.218(d)(1)(i).[3] Commerce received substantive responses from the domestic interested parties [4] and Interpipe [5] within the 30-day deadline specified in 19 CFR 351.218(d)(3)(i). On July 8, 2019, we received rebuttal comments from the domestic interested parties within the deadline specified in 19 CFR 351.218(d)(4).[6] In addition, on July 8, 2019, the GOU's Ministry of Economic Development and Trade placed comments on the record concerning the initiation of the sunset review of the suspended investigation

[1] *See Initiation of Five-Year (Sunset) Reviews,* 84 FR 25741 (June 4, 2019); *see also Suspension of Antidumping Investigation: Certain Oil Country Tubular Goods From Ukraine,* 79 FR 41959 (July 18, 2014).

[2] *See Termination of the Suspension Agreement on Certain Oil Country Tubular Goods from Ukraine, Rescission of Administrative Review, and Issuance of Antidumping Duty Order,* 84 FR 33918 (July 16, 2019) (*Order*).

[3] *See* Benteler, Boomerang, IPSCO, Vallourec, and Welded Tube USA's Letter, ''Oil Country Tubular Goods from Ukraine: Notice of Intent to Participate,'' dated June 13, 2019; *see also* Maverick and Tenaris Bay's Letter, ''Notice of Intent to Participate in First Sunset Review of the Agreement Suspending the Antidumping Duty Investigation on Oil Country Tubular Goods from Ukraine,'' dated June 17, 2019; and U.S. Steel's Letter, ''Five-Year (''Sunset'') Review of Agreement Suspending the Antidumping Duty Investigation on Oil Country Tubular Goods from Ukraine: Notice of Intent to Participate,'' dated June 19, 2019. Responses from the domestic interested parties and Interpipe were filed prior to the termination of the suspension agreement, and thus reference the suspension agreement rather than the *Order.*

[4] *See* Domestic interested parties' Letter, ''Oil Country Tubular Goods from Ukraine: Substantive Response of the Domestic Industry to Commerce's Notice of Initiation of Five-Year (''Sunset'') Reviews,'' dated July 3, 2019.

[5] *See* Interpipe's Letter, ''Sunset Review of the Antidumping Duty Suspension Agreement on Certain Oil Country Tubular Goods from Ukraine: Substantive Response to Notice of Initiation,'' July 3, 2019.

[6] *See* Domestic interested parties's Letter, ''Oil Country Tubular Goods from Ukraine: Rebuttal to the Substantive Response of Interpipe and North American Interpipe to Commerce's Notice of Initiation of Five-Year (''Sunset'') Reviews,'' dated July 8, 2019.

on OCTG from Ukraine.[7] On July 29, 2019, Commerce notified the U.S. International Trade Commission (ITC) that it received an adequate substantive response from the respondent interested party.[8]

Scope of the Order

The merchandise subject to this *Order* is certain oil country tubular goods (OCTG) from Ukraine, which are hollow steel products of circular cross-section, including oil well casing and tubing, of iron (other than cast iron) or steel (both carbon and alloy), whether seamless or welded, regardless of end finish (*e.g.,* whether or not plain end, threaded, or threaded and coupled) whether or not conforming to American Petroleum Institute (API) or non-API specifications, whether finished (including limited service OCTG products) or unfinished (including green tubes and limited service OCTG products), whether or not thread protectors are attached. The scope of the *Order* also covers OCTG coupling stock.

Excluded from the scope of this *Order* are: Casing or tubing containing 10.5 percent or more by weight of chromium; drill pipe; unattached couplings; and unattached thread protectors.

The merchandise subject to this *Order* is currently classified in the Harmonized Tariff Schedule of the United States (HTSUS) under item numbers: 7304.29.10.10, 7304.29.10.20, 7304.29.10.30, 7304.29.10.40, 7304.29.10.50, 7304.29.10.60, 7304.29.10.80, 7304.29.20.10, 7304.29.20.20, 7304.29.20.30, 7304.29.20.40, 7304.29.20.50, 7304.29.20.60, 7304.29.20.80, 7304.29.31.10, 7304.29.31.20, 7304.29.31.30, 7304.29.31.40, 7304.29.31.50, 7304.29.31.60, 7304.29.31.80, 7304.29.41.10, 7304.29.41.20, 7304.29.41.30, 7304.29.41.40, 7304.29.41.50, 7304.29.41.60, 7304.29.41.80, 7304.29.50.15, 7304.29.50.30, 7304.29.50.45, 7304.29.50.60, 7304.29.50.75, 7304.29.61.15, 7304.29.61.30, 7304.29.61.45, 7304.29.61.60, 7304.29.61.75, 7305.20.20.00, 7305.20.40.00, 7305.20.60.00, 7305.20.80.00, 7306.29.10.30, 7306.29.10.90, 7306.29.20.00, 7306.29.31.00, 7306.29.41.00, 7306.29.60.10, 7306.29.60.50, 7306.29.81.10, and 7306.29.81.50.

The merchandise subject to this *Order* may also enter under the following HTSUS item numbers: 7304.39.00.24, 7304.39.00.28, 7304.39.00.32, 7304.39.00.36, 7304.39.00.40, 7304.39.00.44, 7304.39.00.48, 7304.39.00.52, 7304.39.00.56, 7304.39.00.62, 7304.39.00.68, 7304.39.00.72, 7304.39.00.76, 7304.39.00.80, 7304.59.60.00, 7304.59.80.15, 7304.59.80.20, 7304.59.80.25, 7304.59.80.30, 7304.59.80.35, 7304.59.80.40, 7304.59.80.45, 7304.59.80.50, 7304.59.80.55, 7304.59.80.60, 7304.59.80.65, 7304.59.80.70, 7304.59.80.80, 7305.31.40.00, 7305.31.60.90, 7306.30.50.55, 7306.30.50.90, 7306.50.50.50, and 7306.50.50.70.

The HTSUS subheadings above are provided for convenience and customs purposes only. The written description of the scope of the product coverage is dispositive.

Analysis of Comments Received

All issues raised for the preliminary results of this sunset review are addressed in the Preliminary Decision Memorandum.[9] The issues discussed in the Preliminary Decision Memorandum are the likelihood of continuation or recurrence of dumping, and the magnitude of the margins of dumping likely to prevail if this *Order* were revoked.[10] The Preliminary Decision Memorandum is a public document and is on file electronically via Enforcement and Compliance's Antidumping and Countervailing Duty Centralized Electronic Service System (ACCESS). ACCESS is available to registered users at *http://access.trade.gov,* and in the Central Records Unit, Room B8024 of the main Commerce building. In addition, a complete version of the Preliminary Decision Memorandum can be accessed directly on the internet at *http://enforcement.trade.gov/frn/.* The signed Preliminary Decision Memorandum and the electronic version of the Preliminary Decision Memorandum are identical in content.

Preliminary Results of Review

Pursuant to sections 752(c) of the Act, we determine that revocation of the AD order on OCTG from Ukraine would be likely to lead to continuation or recurrence of dumping at weighted average margins of 7.47 percent.

Interested parties may submit case briefs no later than 30 days after the date of publication of the preliminary results of this full sunset review, in accordance with 19 CFR 351.309(c)(1)(i). Rebuttal briefs, which must be limited to issues raised in the case briefs, may be filed no later than five days after the time limit for filing case briefs in accordance with 19 CFR 351.309(d). Any interested party may request a hearing within 30 days of publication of this notice in accordance with 19 CFR 351.310(c). A hearing, if requested, will ordinarily be held two days after the date the rebuttal briefs are due. Commerce will issue a notice of final results of this full sunset review, which will include the results of its analysis of issues raised in any such comments, no later than January 30, 2020.

This five-year (sunset) review and notice are in accordance with sections 751(c), 752(c), and 777(i)(1) of the Act and 19 CFR 351.218(f)(1).

Dated: September 23, 2019.

Jeffrey I. Kessler,

Assistant Secretary for Enforcement and Compliance.

Appendix

List of Topics Discussed in the Preliminary Decision Memorandum

I. Summary
II. History of the Order
III. Background
IV. Scope of the Order
V. Discussion of the Issues
  A. Legal Framework
  B. Analysis
VI. Recommendation

[FR Doc. 2019–21149 Filed 9–27–19; 8:45 am]

BILLING CODE 3510–DS–P

DEPARTMENT OF COMMERCE

International Trade Administration

[A–469–814]

Chlorinated Isocyanurates From Spain: Preliminary No Shipments Determination of Antidumping Duty Administrative Review; 2018–2019

AGENCY: Enforcement and Compliance, International Trade Administration, Department of Commerce.

SUMMARY: The Department of Commerce (Commerce) is conducting an administrative review of the antidumping duty order on chlorinated isocyanurates (chlorinated isos) from Spain for the period of review (POR) June 1, 2018 through May 31, 2019. The review covers one producer/exporter of the subject merchandise, Ercros S.A. (Ercros). We preliminarily determine

[7] *See* Letter from the GOU, ''Certain Oil Country Tubular Goods from Ukraine, case No. A–823–815: Comments of Ukraine,'' dated July 8, 2019 (GOU Comments).

[8] *See* Commerce's Letter, ''Sunset Reviews Initiated on June 1, 2019,'' dated July 29, 2019.

[9] *See* Memorandum, ''Preliminary Decision Memorandum for the First Sunset Review of the Antidumping Duty Order on Oil Country Tubular Goods from Ukraine'' (Preliminary Decision Memorandum), dated concurrently with and hereby adopted by this notice.

[10] *Id.*

that Ercros had no shipments of subject merchandise during the POR. Interested parties are invited to comment on these preliminary results.

DATES: Applicable September 30, 2019.

FOR FURTHER INFORMATION CONTACT: Andrew Huston, AD/CVD Operations, Office VII, Enforcement and Compliance, International Trade Administration, U.S. Department of Commerce, 1401 Constitution Avenue NW, Washington, DC 20230; telephone: (202) 482–4261.

SUPPLEMENTARY INFORMATION:

Scope of the Order

The products covered by the order are chlorinated isocyanurates. Chlorinated isocyanurates are derivatives of cyanuric acid, described as chlorinated s-triazine triones. There are three primary chemical compositions of chlorinated isocyanurates: (1) Trichloroisocyanuric acid (Cl3(NCO)3), (2) sodium dichloroisocyanurate (dihydrate) (NaCl2(NCO)3 2H2O), and (3) sodium dichloroisocyanurate (anhydrous) (NaCl2(NCO)3). Chlorinated isocyanurates are available in powder, granular, and tableted forms. The order covers all chlorinated isocyanurates. Chlorinated isocyanurates are currently classifiable under subheadings 2933.69.6015, 2933.69.6021, and 2933.69.6050 of the Harmonized Tariff Schedule of the United States (HTSUS). The tariff classification 2933.69.6015 covers sodium dichloroisocyanurates (anhydrous and dihydrate forms) and trichloroisocyanuric acid. The tariff classifications 2933.69.6021 and 2933.69.6050 represent basket categories that include chlorinated isocyanurates and other compounds including an unfused triazine ring. Although the HTSUS subheadings are provided for convenience and customs purposes, the written description of the scope of the order is dispositive.

Preliminary Determination of No Shipments

Commerce published in the **Federal Register** a notice of initiation of this administrative review of the antidumping duty order on chlorinated isos from Spain covering one company, Ercros.[1] Commerce received a timely submission from Ercros reporting that it did not sell or export the subject merchandise to the United States during the POR.[2] On August 29, 2019, we transmitted a ''No-Shipment Inquiry'' to U.S. Customs and Border Protection (CBP) regarding this company. Pursuant to this inquiry, Commerce received no notification from CBP of entries of subject merchandise from Ercros within the ten-day deadline. Accordingly, based on record evidence, we preliminarily determine that Ercros had no shipments of subject merchandise during the POR. Consistent with our practice, Commerce finds that it is not appropriate to rescind the review with respect to Ercros, but rather to complete the review with respect to Ercros and issue appropriate instructions to CBP based on the final results of this review.[3]

Public Comment

Interested parties may submit cases briefs no later than 30 days after the date of publication of this notice.[4] Rebuttal briefs, limited to issues raised in the case briefs, may be filed not later than five days after the date for filing case briefs.[5] Parties who submit case briefs or rebuttal briefs in this proceeding are encouraged to submit with each argument: (1) A statement of the issue; (2) a brief summary of the argument; and (3) a table of authorities.[6]

Pursuant to 19 CFR 351.310(c), interested parties who wish to request a hearing, or to participate if one is requested, must submit a written request to the Assistant Secretary for Enforcement and Compliance, U.S. Department of Commerce. Requests should contain the party's name, address, and telephone number, the number of participants, whether any participant is a foreign national, and a list of the issues to be discussed. All documents must be filed electronically using ACCESS.[7] An electronically-filed request must be received successfully in its entirety by ACCESS by 5:00 p.m. Eastern Standard Time, within 30 days after the date of publication of this notice.[8] If a request for a hearing is made, Commerce intends to hold the hearing at the U.S. Department of Commerce, 1401 Constitution Avenue NW, Washington, DC 20230, at a time and date to be determined. Parties should confirm by telephone the date, time, and location of the hearing two days before the scheduled date.

Commerce will issue the final results of this administrative review, including the results of its analysis of the issues raised in any written briefs, not later than 120 days after the date of publication of this notice, pursuant to section 751(a)(3)(A) of the Act.

Assessment Rates

In accordance with Commerce's practice, we find it appropriate to complete the review and issue liquidation instructions to CBP concerning entries for Ercros following issuance of the final results of review. If we continue to find that Ercros had no shipments of subject merchandise in the final results, we will instruct CBP to liquidate any existing entries of merchandise produced by Ercros, but exported by other parties, at the rate for the intermediate reseller, if available, or at the all-others rate.[9]

We intend to issue instructions to CBP 15 days after the publication date of the final results of this review.

Cash Deposit Requirements

The following cash deposit requirements will be effective for all shipments of the subject merchandise entered, or withdrawn from warehouse, for consumption on or after the publication date of the final results of this administrative review, as provided by section 751(a)(2)(C) of the Act: (1) The cash deposit rate for Ercros will remain unchanged from the rate assigned to the company in the most recently completed review of that company; (2) for other manufacturers and exporters covered in a prior segment of the proceeding, the cash deposit rate will continue to be the company-specific rate published for the most recently completed segment of this proceeding in which that manufacturer or exporter participated; (3) if the exporter is not a firm covered in this review, a prior review, or the original investigation, but the manufacturer is, the cash deposit rate will be the rate established for the most recently completed segment of this proceeding for the manufacturer of subject merchandise; and (4) the cash deposit rate for all other manufacturers or exporters will continue to be 24.83 percent, the all-others rate established

[1] *See Initiation of Antidumping Countervailing Duty Administrative Reviews,* 84 FR 36572 (July 29, 2019).

[2] *See* Ercros' Letter, ''Chlorinated Isocyanurates from Spain; Revised No Shipment Certification,'' dated August 26, 2019.

[3] *See, e.g., Magnesium Metal from the Russian Federation: Preliminary Results of Antidumping Duty Administrative Review,* 75 FR 26922, 26923 (May 13, 2010), unchanged in *Magnesium Metal from the Russian Federation: Final Results of Antidumping Duty Administrative Review,* 75 FR 56989 (September 17, 2010) (collectively, *Magnesium Metal from the Russian Federation*).

[4] *See* 19 CFR 351.309(c)(ii).

[5] *See* 19 CFR 351.309(d).

[6] *See* 19 CFR 351.309(c)(2) and (d)(2).

[7] ACCESS is available at *https://access.trade.gov.*

[8] *See* 19 CFR 351.310(c).

[9] *See, e.g., Magnesium Metal from the Russian Federation.*

in the investigation.[10] These deposit requirements, when imposed, shall remain in effect until further notice.

Notification to Importers

This notice also serves as a preliminary reminder to importers of their responsibility under 19 CFR 351.402(f)(2) to file a certificate regarding the reimbursement of antidumping duties prior to liquidation of the relevant entries during this review period. Failure to comply with this requirement could result in the Secretary's presumption that reimbursement of antidumping duties occurred and the subsequent assessment of double antidumping duties.

We are issuing and publishing this administrative review and notice in accordance with sections 751(a)(1) and 777(i) of the Act.

Dated: September 23, 2019.

Jeffrey I. Kessler,

Assistant Secretary for Enforcement and Compliance.

[FR Doc. 2019–21154 Filed 9–27–19; 8:45 am]

BILLING CODE 3510–DS–P

[10] *See Oil Country Tubular Goods from India: Final Determination of Sales at Less Than Fair Value and Final Negative Determination of Critical Circumstances,* 79 FR 41981 (July 18, 2014).

DEPARTMENT OF COMMERCE

International Trade Administration

[A–570–979]

Crystalline Silicon Photovoltaic Cells, Whether or Not Assembled Into Modules, From the People's Republic of China: Notice of Correction to the Final Results of the 2016–2017 Antidumping Duty Administrative Review

AGENCY: Enforcement and Compliance, International Trade Administration, Department of Commerce.

SUMMARY: The Department of Commerce (Commerce) is correcting its notice of the final results of the fifth administrative review of the antidumping duty (AD) order on crystalline silicon photovoltaic cells, whether or not assembled into modules (solar cells), from the People's Republic of China (China). The period of review (POR) is December 1, 2016 through November 30, 2017.

DATES: Applicable September 30, 2019.

FOR FURTHER INFORMATION CONTACT: Jeff Pedersen, AD/CVD Operations, Office IV, Enforcement & Compliance, International Trade Administration, Department of Commerce, 1401 Constitution Avenue NW, Washington, DC 20230; telephone: (202) 482–2769.

SUPPLEMENTARY INFORMATION: On July 30, 2019, Commerce published the final results of the 2016–2017 administrative review of the AD order on solar cells from China in the **Federal Register**.[1] In the *Final Results,* we incorrectly included Wuxi Suntech Power Co., Ltd/Luoyang Suntech Power Co., Ltd. (Wuxi Suntech) in the list of companies we were continuing to find had made no shipments of subject merchandise to the United States during the POR. However, in the *Preliminary Results* we stated the following:

> We found that Wuxi Suntech Power Co., Ltd/Luoyang Suntech Power Co., Ltd. . . . , which claimed no exports, sales or entries of subject merchandise during the POR did, in fact, sell subject merchandise to the United States during the POR. {This company did not file} a separate rate application or certification and thus they have not established their entitlement to a separate rate in this review.[2]

We based this preliminary finding on record evidence that Wuxi Suntech sold subject merchandise to the United States during the POR.[3] We provided Wuxi Suntech an opportunity to discuss the evidence at the time that we placed it on the record,[4] and also provided Wuxi Suntech with an opportunity to submit a case brief concerning our *Preliminary Results.* Wuxi Suntech did not comment on the evidence or submit a case brief. Thus, there was no basis, and Commerce did not intend, to change our preliminary decision with respect to Wuxi Suntech's Power Co., Ltd/Luoyang Suntech Power Co., Ltd.'s no shipment claim or our preliminary finding that this company was not eligible for a separate rate. Hence, we erred when we included Wuxi Suntech Power Co., Ltd/Luoyang Suntech Power Co., Ltd. in the list of companies that we found did not ship subject merchandise to the United States during the POR. Therefore, we are correcting the *Final Results* by clarifying that we have adopted our *Preliminary Results* with respect to Wuxi Suntech Power Co., Ltd/Luoyang Suntech Power Co., Ltd. in the *Final Results.* Specifically, we are continuing to find that Wuxi Suntech Power Co., Ltd/Luoyang Suntech Power Co., Ltd. did in fact have shipments of subject merchandise to the United States during the POR and that Wuxi Suntech Power Co., Ltd/Luoyang Suntech Power Co., Ltd. is not eligible for separate rate status, and thus is part of the China-wide entity. As we noted in the *Final Results,* the China-wide entity rate is 238.95 percent.[5]

This correction to the final results and notice are issued and published in accordance with sections 751(a) and 777(i) of the Tariff Act of 1930, as amended.

Dated: September 20, 2019.

Jeffrey I. Kessler,

Assistant Secretary for Enforcement and Compliance.

[FR Doc. 2019–21150 Filed 9–27–19; 8:45 am]

BILLING CODE 3510–DS–P

[1] *See Crystalline Silicon Photovoltaic Cells, Whether or Not Assembled Into Modules, From the People's Republic of China: Final Results of Antidumping Duty Administrative Review and Final Determination of No Shipments; 2016–2017,* 84 FR 36886 (July 30, 2019) (*Final Results*).

[2] *See Crystalline Silicon Photovoltaic Cells, Whether or Not Assembled Into Modules, From the People's Republic of China: Preliminary Results of Antidumping Duty Administrative Review and Preliminary Determination of No Shipments; 2016–2017,* 83 FR 67222, 67223 (December 28, 2018) (*Preliminary Results*).

[3] *Id.*

[4] *See* Memorandum, ''Crystalline Silicon Photovoltaic Cells, Whether or Not Assembled Into Modules, from the People's Republic of China: Release of U.S. Customs and Border Protection Information Relating to No Shipment Claims Made in the 2016–2017 Administrative Review of Crystalline Silicon Photovoltaic Cells from the People's Republic of China,'' dated September 10, 2018; *see also* Memorandum, ''Crystalline Silicon Photovoltaic Cells, Whether or Not Assembled Into Modules, from the People's Republic of China: Information Concerning September 7, 2018 Memorandum,'' dated October 23, 2018.

[5] *See Final Results,* 84 FR at 36888.

DEPARTMENT OF COMMERCE

International Trade Administration

[A–570–042]

Stainless Steel Sheet and Strip From the People's Republic of China: Rescission of Antidumping Duty Administrative Review; 2018–2019

AGENCY: Enforcement and Compliance, International Trade Administration, Department of Commerce.

SUMMARY: The Department of Commerce (Commerce) is rescinding the administrative review of the antidumping duty (AD) order on stainless steel sheet and strip from the People's Republic of China for the period April 1, 2018, through March 31, 2019.

DATES: Applicable September 30, 2019.

FOR FURTHER INFORMATION CONTACT: Thomas Dunne, AD/CVD Operations, Office VII, Enforcement and Compliance, International Trade Administration, U.S. Department of Commerce, 1401 Constitution Avenue NW, Washington, DC 20230; telephone: (202) 482–2328.

SUPPLEMENTARY INFORMATION:

Background

On April 1, 2019, Commerce published a notice of opportunity to request an administrative review of the AD order on stainless steel sheet and strip (SSSS) from the People's Republic of China (China) for the period April 1, 2018, through March 31, 2019.[1] On April 30, 2019, the petitioners [2] filed a timely request for review with respect to specific companies and affiliates from China, in accordance with section 751(a) of the Tariff Act of 1930, as amended (the Act), and 19 CFR 351.213(b).[3] Pursuant to this request, and in accordance with section 751(a) of the Act and 19 CFR 351.221(c)(1)(i), we initiated an administrative review of the order.[4] On June 19, 2019, the petitioners filed a timely withdrawal of request for the administrative review with respect to all entities for which it had requested a review.[5]

Rescission of Review

Pursuant to 19 CFR 351.213(d)(1), the Secretary will rescind an administrative review, in whole or in part, if the party that requested the review withdraws the request within 90 days of the date of publication of the notice of initiation of the requested review. As noted above, the petitioners, who were the only party to file a request for review, withdrew their request by the 90-day deadline. Accordingly, we are rescinding the administrative review of the AD order on SSSS from China for the period April 1, 2018, through March 31, 2019, in its entirety.

Assessment

Commerce will instruct U.S. Customs and Border Protection (CBP) to assess AD duties on all appropriate entries of SSSS from China. AD duties shall be assessed at rates equal to the cash deposit of estimated AD duties required at the time of entry, or withdrawal from warehouse, for consumption, in accordance with 19 CFR 351.212(c)(1)(i). Commerce intends to issue appropriate assessment instructions to CBP 15 days after the date of publication of this notice in the **Federal Register**.

Notification to Importers

This notice serves as a reminder to importers of their responsibility under 19 CFR 351.402(f)(2) to file a certificate regarding the reimbursement of AD duties prior to liquidation of the relevant entries during this review period. Failure to comply with this requirement could result in Commerce's presumption that reimbursement of AD duties occurred and the subsequent assessment of doubled AD duties.

Notification Regarding Administrative Protective Orders

This notice also serves as a reminder to all parties subject to administrative protective order (APO) of their responsibility concerning the disposition of proprietary information disclosed under APO in accordance with 19 CFR 351.305. Timely written notification of the return/destruction of APO materials or conversion to judicial protective order is hereby requested. Failure to comply with the regulations and terms of an APO is a violation which is subject to sanction.

This notice is issued and published in accordance with sections 751(a)(1) and 777(i)(1) of the Act, and 19 CFR 351.213(d)(4).

Dated: September 24, 2019.

James Maeder,

Deputy Assistant Secretary for Antidumping and Countervailing Duty Operations.

[FR Doc. 2019–21152 Filed 9–27–19; 8:45 am]

BILLING CODE 3510–DS–P

[1] *See Antidumping or Countervailing Duty Order, Finding, or Suspended Investigation; Opportunity to Request Administrative Review,* 84 FR 12207 (April 1, 2019).

[2] The petitioners are AK Steel Corporation, Allegheny Ludlum, LLC d/b/a ATI Flat Rolled Products, North American Stainless, and Outokumpu Stainless USA, LLC.

[3] *See* Petitioners' Letter, ''Antidumping Duty Order on Stainless Steel Sheet and Strip from the People's Republic of China—Petitioners' Request for Initiation of Second Administrative Review,'' dated April 30, 2019.

[4] *See Initiation of Antidumping and Countervailing Duty Administrative Reviews,* 84 FR 27587 (June 13, 2019).

[5] *See* Petitioners' Letter, ''Antidumping Duty Order on Stainless Steel Sheet and Strip from the People's Republic of China-Petitioners' Withdrawal of Requests for Second Administrative Review'' dated June 19, 2019.

DEPARTMENT OF COMMERCE

International Trade Administration

[A–533–824]

Polyethylene Terephthalate Film Sheet, and Strip From India: Notice of Correction to the Notice of a Court Decision Not in Harmony With the Final Results of the Antidumping Duty Administrative Review, 2015–2016; and Notice of Amended Final Results of the Antidumping Duty Administrative Review, 2015–2016

AGENCY: Enforcement and Compliance, International Trade Administration, Department of Commerce.

DATES: Applicable August 2, 2019.

FOR FURTHER INFORMATION CONTACT: Jacqueline Arrowsmith, AD/CVD Operations, Office VII, Enforcement and Compliance, International Trade Administration, U.S. Department of Commerce, 1401 Constitution Avenue NW, Washington, DC 20230; telephone: (202) 482–5255.

SUPPLEMENTARY INFORMATION: On August 2, 2019, the Department of Commerce (Commerce) published the **Federal Register** notice of a court decision not in harmony with the final results of the antidumping duty administrative review, 2015–2016, and notice amending the final results of its administrative review with respect to the weighted-average dumping margin assigned to Jindal Poly Films Limited of India.[1] In that notice, Commerce inadvertently listed the applicable date as July 23, 2019. The correct applicable date is August 2, 2019.

This correction to the **Federal Register** notice is issued in accordance with sections 516A(e)(1), 751(a)(1) and 777(i)(1) of the Tariff Act of 1930, as amended.

Dated: September 24, 2019.

Christian Marsh,

Deputy Assistant Secretary for Enforcement and Compliance.

[FR Doc. 2019–21153 Filed 9–27–19; 8:45 am]

BILLING CODE 3510–DS–P

[1] *See Polyethylene Terephthalate Film, Sheet, and Strip from India: Notice of Court Decision Not in Harmony with the Final Results of the Antidumping Duty Administrative Review, 2015–2016; and Notice of Amended Final Results of the Antidumping Duty Administrative Review, 2015–2016,* 84 FR 37832 (August 2, 2019).

DEPARTMENT OF COMMERCE

International Trade Administration

[A–560–830]

Biodiesel from Indonesia: Rescission of Antidumping Duty Administrative Review; 2017–2019

AGENCY: Enforcement and Compliance, International Trade Administration, Department of Commerce.

SUMMARY: The Department of Commerce (Commerce) is rescinding the administrative review of the antidumping duty (AD) order on biodiesel from Indonesia for the period October 31, 2017, through March 31, 2019.

DATES: Applicable September 30, 2019.

FOR FURTHER INFORMATION CONTACT: Thomas Dunne, AD/CVD Operations, Office VII, Enforcement and Compliance, International Trade Administration, U.S. Department of Commerce, 1401 Constitution Avenue

NW, Washington, DC 20230; telephone: (202) 482–2328.

SUPPLEMENTARY INFORMATION:

Background

On April 1, 2019 Commerce published a notice of opportunity to request an administrative review of the antidumping duty (AD) order on biodiesel from Indonesia for the period October 31, 2017, through March 31, 2019.[1] On April 26, 2019, the petitioner[2] filed a timely request for review with respect to PT. Cermerlang Energi Perkasa (CEP); PT. Ciliandra Perkasa; PT. Musim Mas, Medan; PT. Pelita Agung Agrindustri; and Wilmar International Ltd. (collectively, the Companies Subject to Review), in accordance with section 751(a) of the Tariff Act of 1930, as amended (the Act), and 19 CFR 351.213(b).[3] Pursuant to this request, and in accordance with section 751(a) of the Act and 19 CFR 351.221(c)(1)(i), we initiated an administrative review of the order.[4] On September 10, 2019, the petitioner filed a timely withdrawal of request for the administrative review with respect to all entities for which it had requested a review.[5]

Rescission of Review

Pursuant to 19 CFR 351.213(d)(1), the Secretary will rescind an administrative review, in whole or in part, if the party that requested the review withdraws the request within 90 days of the date of publication of the notice of initiation of the requested review. As noted above, the petitioner, who was the only party to file a request for review, withdrew its request by the 90-day deadline. Accordingly, we are rescinding the administrative review of the AD order on biodiesel from Indonesia for the period October 31, 2017, through March 31, 2019, in its entirety.

Assessment

Commerce will instruct U.S. Customs and Border Protection (CBP) to assess AD duties on all appropriate entries of biodiesel from Indonesia. AD duties shall be assessed at rates equal to the cash deposit of estimated AD duties required at the time of entry, or withdrawal from warehouse, for consumption, in accordance with 19 CFR 351.212(c)(1)(i). Commerce intends to issue appropriate assessment instructions to CBP 15 days after the date of publication of this notice in the **Federal Register**.

Notification to Importers

This notice serves as a reminder to importers of their responsibility under 19 CFR 351.402(f)(2) to file a certificate regarding the reimbursement of CVD duties prior to liquidation of the relevant entries during this review period. Failure to comply with this requirement could result in Commerce's presumption that reimbursement of AD duties occurred and the subsequent assessment of doubled AD duties.

Notification Regarding Administrative Protective Orders

This notice also serves as a reminder to all parties subject to administrative protective order (APO) of their responsibility concerning the disposition of proprietary information disclosed under APO in accordance with 19 CFR 351.305. Timely written notification of the return/destruction of APO materials or conversion to judicial protective order is hereby requested. Failure to comply with the regulations and terms of an APO is a violation which is subject to sanction.

This notice is issued and published in accordance with sections 751(a)(1) and 777(i)(1) of the Act, and 19 CFR 351.213(d)(4).

Dated: September 24, 2019.

James Maeder,

Deputy Assistant Secretary for Antidumping and Countervailing Duty Operations.

[FR Doc. 2019–21151 Filed 9–27–19; 8:45 am]

BILLING CODE 3510–DS–P

[1] *See Antidumping or Countervailing Duty Order, Finding, or Suspended Investigation; Opportunity to Request Administrative Review,* 84 FR 12207 (April 1, 2019).

[2] The petitioner is the National Biodiesel Board Fair Trade Coalition, which includes the National Biodiesel Board; American GreenFuels, LLC; Archer Daniels Midland Company; Ag Processing Inc. a cooperative; Crimson Renewable Energy LP; High Plains Bioenergy; Integrity Biofuels, LLC; Iowa Renewable Energy, LLC; Lake Erie Biofuels dba HERO BX; Minnesota Soybean Processors; New Leaf Biofuel, LLC; Newport Biodiesel, LLC; Renewable Biofuels, LLC; Renewable Energy Group, Inc.; Western Dubuque Biodiesel, LLC; Western Iowa Energy, LLC; and World Management Group LLC dba World Energy.

[3] *See* Petitioner's Letter, ''Biodiesel from Indonesia: Request for Administrative Review of Antidumping Duty Order,'' dated April 26, 2019.

[4] *See Initiation of Antidumping and Countervailing Duty Administrative Reviews,* 84 FR 27599 (June 13, 2019).

[5] *See* Petitioner's Letter, ''Biodiesel from Indonesia: Withdrawal of Request for Administrative Review of Antidumping Duty Order,'' dated September 10, 2019.

DEPARTMENT OF COMMERCE

National Oceanic and Atmospheric Administration

RIN 0648–XV080

Fisheries of the Gulf of Mexico; Southeast Data, Assessment, and Review (SEDAR); Public Meeting

AGENCY: National Marine Fisheries Service (NMFS), National Oceanic and Atmospheric Administration (NOAA), Commerce.

ACTION: Notice of SEDAR 67 data and assessment scoping webinar for Gulf of Mexico vermilion snapper.

SUMMARY: The SEDAR 62 assessment process of Gulf of Mexico vermilion snapper will consist of a series of data and assessment webinars. See **SUPPLEMENTARY INFORMATION**.

DATES: The SEDAR 67 data and assessment scoping webinar will be held October 18, 2019, from 10 a.m. to 12 p.m., Eastern Time.

ADDRESSES: The meeting will be held via webinar. The webinar is open to members of the public. Those interested in participating should contact Julie A. Neer at SEDAR (see **FOR FURTHER INFORMATION CONTACT**) to request an invitation providing webinar access information. Please request webinar invitations at least 24 hours in advance of each webinar.

SEDAR address: 4055 Faber Place Drive, Suite 201, North Charleston, SC 29405.

FOR FURTHER INFORMATION CONTACT: Julie A. Neer, SEDAR Coordinator; (843) 571–4366; email: *Julie.neer@safmc.net.*

SUPPLEMENTARY INFORMATION: The Gulf of Mexico, South Atlantic, and Caribbean Fishery Management Councils, in conjunction with NOAA Fisheries and the Atlantic and Gulf States Marine Fisheries Commissions have implemented the Southeast Data, Assessment and Review (SEDAR) process, a multi-step method for determining the status of fish stocks in the Southeast Region. SEDAR is a multi-step process including: (1) Data Workshop, (2) a series of assessment webinars, and (3) A Review Workshop. The product of the Data Workshop is a report that compiles and evaluates potential datasets and recommends which datasets are appropriate for assessment analyses. The assessment webinars produce a report that describes the fisheries, evaluates the status of the stock, estimates biological benchmarks, projects future population conditions, and recommends research and monitoring needs. The product of the

Review Workshop is an Assessment Summary documenting panel opinions regarding the strengths and weaknesses of the stock assessment and input data. Participants for SEDAR Workshops are appointed by the Gulf of Mexico, South Atlantic, and Caribbean Fishery Management Councils and NOAA Fisheries Southeast Regional Office, HMS Management Division, and Southeast Fisheries Science Center. Participants include data collectors and database managers; stock assessment scientists, biologists, and researchers; constituency representatives including fishermen, environmentalists, and NGO's; International experts; and staff of Councils, Commissions, and state and federal agencies.

The items of discussion during the data and assessment scoping webinar are as follows:

Panelists will review the data sets being considered for the assessment and discuss initial modeling efforts.

Although non-emergency issues not contained in this agenda may come before this group for discussion, those issues may not be the subject of formal action during this meeting. Action will be restricted to those issues specifically identified in this notice and any issues arising after publication of this notice that require emergency action under section 305(c) of the Magnuson-Stevens Fishery Conservation and Management Act, provided the public has been notified of the intent to take final action to address the emergency.

Special Accommodations

The meeting is physically accessible to people with disabilities. Requests for sign language interpretation or other auxiliary aids should be directed to the Council office (see **ADDRESSES**) at least 5 business days prior to each workshop.

Note: The times and sequence specified in this agenda are subject to change.

Authority: 16 U.S.C. 1801 *et seq.*

Dated: September 25, 2019.

Tracey L. Thompson,

Acting Deputy Director, Office of Sustainable Fisheries, National Marine Fisheries Service.

[FR Doc. 2019–21158 Filed 9–27–19; 8:45 am]

BILLING CODE 3510–22–P

DEPARTMENT OF COMMERCE

National Oceanic and Atmospheric Administration

RIN 0648–XV084

Gulf of Mexico Fishery Management Council; Public Meeting

AGENCY: National Marine Fisheries Service (NMFS), National Oceanic and Atmospheric Administration (NOAA), Commerce.

ACTION: Notice of a public meeting.

SUMMARY: The Gulf of Mexico Fishery Management Council (Council) will hold a four-day meeting to consider actions affecting the Gulf of Mexico fisheries in the exclusive economic zone (EEZ).

DATES: The meeting will convene on Monday, October 21 through Thursday, October 24, 2019.

ADDRESSES: The meeting will take place at The Tremont House, 2300 Ships Mechanic Row, Galveston, TX 77550; telephone: (409) 763–0300.

Council address: Gulf of Mexico Fishery Management Council, 4107 W Spruce Street, Suite 200, Tampa, FL 33607; telephone: (813) 348–1630.

FOR FURTHER INFORMATION CONTACT: Dr. Carrie Simmons, Executive Director, Gulf of Mexico Fishery Management Council; telephone: (813) 348–1630.

SUPPLEMENTARY INFORMATION:

Agenda

Monday, October 21, 2019; 8 a.m.–5:30 p.m.

The meeting will begin in *Full Council* with induction of new council member; and, review and adoption of Council Committee Assignments for October 2019 through October 2020.

Committee sessions will begin with the Administrative/Budget Committee reviewing the 2015–19 Projected Expenditures and Budget Carryover to 2020; and, review and discuss Potential Contractual Projects for 2020. The Coral Committee will receive updates on the Coral Reef Conservation Program and Flower Garden Banks National Marine Sanctuary Expansion; review the status of Coral Amendment 9 and Florida Keys National Marine Sanctuary Management Review and Recommendations from Joint Coral Scientific and Statistical Committee (SSC), Coral Advisory Panel (AP), and Shrimp AP Meeting and Reef Fish AP. The Coral Committee will receive any remaining items from the Joint Coral SSC, Coral AP, and Shrimp AP meeting. The Sustainable Fisheries Committee will discuss final draft Framework Action to Modify Federal For-Hire Trip Limits and draft Amendment Reef Fish 48/Red Drum 5: Status Determination Criteria and Optimum Yield for Reef Fish and Red Drum. The committee will also discuss Council Research and Monitoring Priorities for 2020–24; receive a presentation on Eye on the Gulf: An Electronic Monitoring Presentation on the Gulf of Mexico Reef Fish Fishery; presentation on Allocation Review Criteria; receive remaining items from the SSC Summary Report; and, hold a committee discussion on Allocation Issues.

Immediately following Sustainable Fisheries Committee, National Marine Fisheries Service (NMFS) will have an information Individual Fishing Quota (IFQ) Outreach Session for Fishermen and Dealers.

Tuesday, October 22, 2019; 8:30 a.m.–5:30 p.m.

Committee sessions will continue with Outreach and Education receiving a presentation on Communication Analytics; review of ''Fishing for Our Future'' web page; and, receive a meeting summary from the Release Mortality Symposium. The Reef Fish Committee will review the Reef Fish and Coastal Migratory Pelagics Landings, draft Amendment 36B: Modifications to Commercial IFQ Programs and Presentations; and, draft Framework Action to Modify Greater Amberjack Recreational Management Measures. Following lunch, the Reef Fish Committee will review stock assessments for SEDAR 61—Gulf of Mexico Red Grouper and Itarget Model Update and Projections for Gulf Lane Snapper; and receive a summary report of the remaining items from the Reef Fish Advisory Panel meeting.

Wednesday, October 23, 2019; 8:30 a.m.–5:30 p.m.

The Law Enforcement Committee will receive a summary from the Law Enforcement Technical Committee Meeting; and, review of Illegal Unreported and Unregulated (IUU) Fishing Report. The Gulf SEDAR Committee will review of Gulf Stocks suitable for interim analyses, receive a summary from the August 2019 SEDAR Steering Committee meeting (webinar) on NOAA's Recommended Use of the Current Gulf of Mexico Surveys of Marine Recreational Fishing in Stock Assessments; review a Report to Congress Regarding Section 201 of the Modernizing Recreational Fisheries Management Act of 2018; and receive a summary from the September 2019 SEDAR Steering Committee meeting (webinar). The Data Collection

Committee will discuss draft Procedural Directive for Electronic Monitoring Programs; and, receive an update on Southeast For-Hire Reporting.

Full Council will reconvene late morning with Call to Order, Announcements, and Introductions; Adoption of Agenda and Approval of Minutes. Council will review Exempted Fishing Permit (EFP) Applications and public comments on EFP Applications (if any); and, receive a presentation on Texas Law Enforcement Efforts. After lunch, the Council will hold public comment testimony 2 p.m. until 5:30 p.m. on the following items: Final Action: Framework Action to Modify Federal For-Hire Trip Limits; and open testimony on Other Fishery Issues or Concerns. Anyone wishing to speak during public comment testimony should sign in at the registration station located at the entrance of the meeting room.

Thursday, October 24, 2019; 8:30 a.m.–4 p.m.

The Council will receive reports from the following management committees: Administrative/Budget, Coral, Outreach and Education, Sustainable Fisheries, Gulf SEDAR, Data Collection, Law Enforcement and Reef Fish. The Council will vote on EFP applications, if any; and receive updates from the following supporting agencies: South Atlantic Fishery Management Council; NOAA Office of Law Enforcement (OLE), Gulf States Marine Fisheries Commission; U.S. Coast Guard; U.S. Fish and Wildlife Service; Department of State.

Lastly, the Council will discuss any Other Business items; and receive an update on the South Atlantic Council's Control Date for *Spanish Mackerel.*

—Meeting Adjourns

The meeting will be broadcast via webinar. You may register for the webinar by visiting *www.gulfcouncil.org* and clicking on the Council meeting on the calendar.

The timing and order in which agenda items are addressed may change as required to effectively address the issue, and the latest version along with other meeting materials will be posted on the website as they become available.

Although other non-emergency issues not contained in this agenda may come before this group for discussion, in accordance with the Magnuson-Stevens Fishery Conservation and Management Act (Magnuson-Stevens Act), those issues may not be the subject of formal action during these meeting. Actions will be restricted to those issues specifically listed in this notice and any issues arising after publication of this notice that require emergency action under Section 305(c) of the Magnuson-Stevens Act, provided that the public has been notified of the Council's intent to take final action to address the emergency.

Special Accommodations

These meetings are physically accessible to people with disabilities. Requests for sign language interpretation or other auxiliary aid should be directed to Kathy Pereira, (813) 348–1630, at least 5 days prior to the meeting date.

Authority: 16 U.S.C. 1801 *et seq.*

Dated: September 25, 2019.

Tracey L. Thompson,

Acting Deputy Director, Office of Sustainable Fisheries, National Marine Fisheries Service.

[FR Doc. 2019–21162 Filed 9–27–19; 8:45 am]

BILLING CODE 3510–22–P

DEPARTMENT OF COMMERCE

National Oceanic and Atmospheric Administration

RIN 0648–XV082

Fisheries of the South Atlantic; Southeast Data, Assessment, and Review (SEDAR); Public Meeting

AGENCY: National Marine Fisheries Service (NMFS), National Oceanic and Atmospheric Administration (NOAA), Commerce.

ACTION: Notice of scheduled SEDAR 59 Assessment Webinar 1.

SUMMARY: The SEDAR 59 assessment of the South Atlantic stock of Greater Amberjack will consist of a series of assessment webinars.

DATES: The SEDAR 59 Greater Amberjack-Assessment Webinar 1 has been scheduled for Friday, November 1, 2019, from 2:30 p.m. to 5 p.m.

ADDRESSES:

Meeting address: The meeting will be held via webinar. The webinar is open to members of the public. Registration is available online at: *https://attendee.gotowebinar.com/register/1787856885916483597.*

SEDAR address: South Atlantic Fishery Management Council, 4055 Faber Place Drive, Suite 201, N Charleston, SC 29405; *www.sedarweb.org.*

FOR FURTHER INFORMATION CONTACT: Kathleen Howington, SEDAR Coordinator, 4055 Faber Place Drive, Suite 201, North Charleston, SC 29405; phone (843) 571–4366; email: *Kathleen.Howington@safmc.net.*

SUPPLEMENTARY INFORMATION: The Gulf of Mexico, South Atlantic, and Caribbean Fishery Management Councils, in conjunction with NOAA Fisheries and the Atlantic and Gulf States Marine Fisheries Commissions, have implemented the Southeast Data, Assessment and Review (SEDAR) process, a multi-step method for determining the status of fish stocks in the Southeast Region. SEDAR is a three-step process including: (1) Data Workshop; (2) Assessment Process utilizing webinars; and (3) Review Workshop. The product of the Data Workshop is a data report, which compiles and evaluates potential datasets and recommends which datasets are appropriate for assessment analyses. The product of the Assessment Process is a stock assessment report, which describes the fisheries, evaluates the status of the stock, estimates biological benchmarks, projects future population conditions, and recommends research and monitoring needs. The assessment is independently peer reviewed at the Review Workshop. The product of the Review Workshop is a Summary documenting panel opinions regarding the strengths and weaknesses of the stock assessment and input data. Participants for SEDAR Workshops are appointed by the Gulf of Mexico, South Atlantic, and Caribbean Fishery Management Councils and NOAA Fisheries Southeast Regional Office, Highly Migratory Species Management Division, and Southeast Fisheries Science Center. Participants include: Data collectors and database managers; stock assessment scientists, biologists, and researchers; constituency representatives including fishermen, environmentalists, and non-governmental organizations (NGOs); international experts; and staff of Councils, Commissions, and state and federal agencies.

The items of discussion at the SEDAR 59 Greater Amberjack Assessment webinar 1 are as follows:

- Review of data
- Discussion of model structure

Although non-emergency issues not contained in this agenda may come before this group for discussion, those issues may not be the subject of formal action during this meeting. Action will be restricted to those issues specifically identified in this notice and any issues arising after publication of this notice that require emergency action under section 305(c) of the Magnuson-Stevens Fishery Conservation and Management Act, provided the public has been notified of the intent to take final action to address the emergency.

Special Accommodations

This meeting is accessible to people with disabilities. Requests for auxiliary aids should be directed to the South Atlantic Fishery Management Council office (see **ADDRESSES**) at least 5 business days prior to the meeting.

Note: The times and sequence specified in this agenda are subject to change.

Authority: 16 U.S.C. 1801 *et seq.*

Dated: September 25, 2019.

Tracey L. Thompson,

Acting Deputy Director, Office of Sustainable Fisheries, National Marine Fisheries Service.

[FR Doc. 2019–21160 Filed 9–27–19; 8:45 am]

BILLING CODE 3510–22–P

DEPARTMENT OF COMMERCE

National Oceanic and Atmospheric Administration

RIN 0648–XR041

Endangered and Threatened Species; Take of Anadromous Fish

AGENCY: National Marine Fisheries Service (NMFS), National Oceanic and Atmospheric Administration (NOAA), Department of Commerce.

ACTION: Notice; receipt of one incidental take permit application; availability of a draft environmental assessment; request for comments.

SUMMARY: Notice is hereby given that NMFS has received one incidental take permit application for the Calaveras River Habitat Conservation Plan (HCP) pursuant to the Endangered Species Act (ESA) of 1973, as amended. NMFS has also prepared a draft environmental assessment (EA) under the National Environmental Policy Act (NEPA) describing the potential effects of Stockton East Water District's (District) proposed Calaveras River HCP. The Calaveras River HCP was prepared and submitted by the District and describes their ongoing operations and monitoring activities in the Calaveras River. NMFS is furnishing this notice in order to allow other agencies and the public an opportunity to review and comment on the Calaveras River HCP and EA. All comments and other information received will become part of the public record and will be available for review.

DATES: Comments or requests for a public hearing on the applications must be received at the appropriate address or fax number (see **ADDRESSES**) no later than 5 p.m. Pacific standard time on November 14, 2019.

ADDRESSES: Written comments on the submitted permit application and associated HCP and/or the draft EA should be addressed to the NMFS California Central Valley Office, Attn: Calaveras River Habitat Conservation Plan, 650 Capitol Mall, Suite 5–100, Sacramento, CA 95814. Comments may also be submitted via fax to 916–930–3629 or by email to *Calaveras.HCP@noaa.gov.* Include in the subject line of the email comment the following identifier: Comments on Calaveras River Habitat Conservation Plan. Please specify whether the comments provided are associated with the HCP or the draft EA. When commenting, please refer to the specific page number and line number of the subject of your comment. The documents are available on the internet at *https://www.fisheries.noaa.gov/action/calaveras-river-habitat-conservation-plan-and-environmental-assessment.*

FOR FURTHER INFORMATION CONTACT: Monica Gutierrez, Sacramento, CA, at phone number: (916) 930–3657, via fax: (916) 930–3629, or via email: *Monica.Gutierrez@noaa.gov.*

SUPPLEMENTARY INFORMATION:

ESA-Listed Species Covered in This Notice

Chinook salmon (*Oncorhynchus tshawytscha*): Winter-run Chinook salmon, spring-run Chinook salmon, and fall/late fall-run Chinook salmon.

California Central Valley (CCV) steelhead (*O. mykiss*).

Background

The District is seeking coverage under section 10(a)(1)(B) of the ESA for their ongoing operations and monitoring program in the lower Calaveras River in California's Central Valley. The Calaveras River, a tributary to the San Joaquin River, serves as an important source of water for fish, agriculture, and municipal uses in Calaveras and San Joaquin counties. The District manages the water resources within the Calaveras River during non-flood control periods for their respective constituents. The Calaveras River provides valuable habitat for CCV steelhead and Chinook salmon. The District's operations may result in impacts to listed species and their habitat within the Calaveras River. Therefore, the District is committed to working collaboratively with NMFS to minimize these impacts through implementation of the HCP upon issuance of the Section 10(a)(1)(B) Permit.

Authority

Section 9 of the ESA and Federal regulations prohibit the 'taking' of a species listed as endangered or threatened. The ESA defines ''take'' to mean harass, harm, pursue, hunt, shoot, wound, kill, trap, capture, or collect, or to attempt to engage in any such conduct. NMFS may issue permits, under limited circumstances to take listed species incidental to, and not the purpose of, otherwise lawful activities. Section 10(a)(1)(B) of the ESA provides for authorizing incidental take of listed species. NMFS regulations governing permits for threatened and endangered species are promulgated at 50 CFR 222.307.

NEPA requires Federal agencies to conduct an environmental analysis of their proposed actions to determine if the actions may affect the human environment. Therefore, NMFS is seeking public input on the scope of the required NEPA analysis, including the range of reasonable alternatives and associated impacts of any alternatives.

Angela Somma,

Chief, Endangered Species Conservation Division, Office of Protected Resources, National Marine Fisheries Service.

[FR Doc. 2019–21089 Filed 9–27–19; 8:45 am]

BILLING CODE 3510–22–P

DEPARTMENT OF COMMERCE

National Oceanic and Atmospheric Administration

RIN 0648–XV081

Fisheries of the South Atlantic; South Atlantic Fishery Management Council; Public Meetings

AGENCY: National Marine Fisheries Service (NMFS), National Oceanic and Atmospheric Administration (NOAA), Commerce.

ACTION: Notice of a public meeting.

SUMMARY: The South Atlantic Fishery Management Council (Council) will hold a meeting of its Citizen Science Operations Committee via webinar October 25, 2019.

DATES: The Citizen Science Operations Committee meeting will be held via webinar on Friday, October 25, 2019, from 1 p.m. until 4 p.m.

ADDRESSES: The meeting will be held via webinar. The webinar is open to members of the public. Those interested in participating should contact Julia Byrd (see **FOR FURTHER INFORMATION CONTACT**) to request an invitation providing webinar access information. Please request webinar invitations at least 24 hours in advance of each webinar. There will be an opportunity for public comment at the beginning of the meeting.

Council address: South Atlantic Fishery Management Council, 4055 Faber Place Drive, Suite 201, N Charleston, SC 29405.

FOR FURTHER INFORMATION CONTACT: Julia Byrd, Citizen Science Program Manager, SAFMC; phone: (843) 302–8439 or toll free (866) SAFMC–10; fax: (843) 769–4520; email: *julia.byrd@safmc.net.*

SUPPLEMENTARY INFORMATION: The Citizen Science Operations Committee serves as advisors to the Council's Citizen Science Program. Committee members include representatives from the Council's Citizen Science Advisory Panel, Southeast Regional Office, Southeast Fisheries Science Center, and Science and Statistical Committee. Their responsibilities include developing programmatic recommendations, reviewing policies, providing program direction/multi-partner support, identifying citizen science research needs, and providing general advice.

Items to be addressed during this webinar meeting include:

1. Citizen Science Program Overview & Update
2. Citizen Science Projects Update
3. Review of the citizen science research priorities and recommend updates as appropriate
4. Discuss Citizen Science Program evaluation and provide recommendations as appropriate
5. Other Business

Special Accommodations

The meeting is physically accessible to people with disabilities. Requests for auxiliary aids should be directed to the council office (see **ADDRESSES**) 3 days prior to the meeting.

Note: The times and sequence specified in this agenda are subject to change.

Authority: 16 U.S.C. 1801 *et seq.*

Dated: September 25, 2019.

Tracey L. Thompson,

Acting Deputy Director, Office of Sustainable Fisheries, National Marine Fisheries Service.

[FR Doc. 2019–21159 Filed 9–27–19; 8:45 am]

BILLING CODE 3510–22–P

DEPARTMENT OF COMMERCE

National Oceanic and Atmospheric Administration

RIN 0648–XV085

Western Pacific Fishery Management Council; Public Meetings

AGENCY: National Marine Fisheries Service (NMFS), National Oceanic and Atmospheric Administration (NOAA), Commerce.

ACTION: Notice of public meetings.

SUMMARY: The Western Pacific Fishery Management Council (Council) will hold its 134th Scientific and Statistical Committee (SSC) meeting, American Samoa Archipelago Fishery Ecosystem Plan Advisory Panel (AP), American Samoa Regional Ecosystem Advisory Committee (REAC), Executive and Budget Standing Committee, Pelagic and International Standing Committee and its 180th Council meeting to take actions on fishery management issues in the Western Pacific Region.

DATES: The meetings will be held between October 15 and October 24, 2019. For specific times and agendas, see **SUPPLEMENTARY INFORMATION**. All times listed are local island times.

ADDRESSES:

Meeting addresses: The 134th SSC will be held at the Council Office Conference Room, 1164 Bishop St. Suite 1400, Honolulu, HI 96813, phone: (808) 522–8220. The Executive and Budget Standing Committee and Pelagic and International Standing Committee will be held at Sadie's by the Sea, Utulei Beach, Route 1, Pago Pago, American Samoa, phone: (684) 633–5900. The REAC, AP, and 180th Council meeting will be held at Governor Tauese P.F. Sunia Ocean Center, Pago-Pago, American Samoa, phone: (684) 633–6500.

Council address: Western Pacific Fishery Management Council, 1164 Bishop Street, Suite 1400, Honolulu, HI 96813.

FOR FURTHER INFORMATION CONTACT: Kitty M. Simonds, Executive Director, Western Pacific Fishery Management Council; phone: (808) 522–8220.

SUPPLEMENTARY INFORMATION: The 134th SSC meeting will be held between 8:30 a.m. and 5 p.m. on October 15–17, 2019. The REAC will be held between 9 a.m. and 3 p.m. on October 18, 2019. The AP will be held between 4 p.m. and 6 p.m. on October 18, 2019. The Executive and Budget Standing Committee will be held between 8:30 a.m. and 10:30 a.m. on October 21, 2019. The Pelagic and International Standing Committee will be held between 10:30 a.m. and 12:30 p.m. on October 21, 2019. The 180th Council Meeting will be held on October 22, 2019, between 9 a.m. and 5 p.m. with a Public Comment for Non-Agenda Items between 4 p.m. and 5 p.m. and a Fishers Forum between 6 p.m. and 9 p.m. The Council meeting continues on October 23, 2019, between 8:30 p.m. and 5 p.m. and on October 24, 2019, between 8:30 a.m. and 12 noon. Agenda items noted as ''Final Action Items'' refer to actions that result in Council transmittal of a proposed fishery management plan, proposed plan amendment, or proposed regulations to the U.S. Secretary of Commerce, under Sections 304 or 305 of the MSA. In addition to the agenda items listed here, the Council and its advisory bodies will hear recommendations from Council advisors. An opportunity to submit public comment will be provided throughout the agendas. The order in which agenda items are addressed may change and will be announced in advance at the Council meeting. The meetings will run as late as necessary to complete scheduled business. Background documents will be available from, and written comments should be sent to, Kitty M. Simonds, Executive Director; Western Pacific Fishery Management Council, 1164 Bishop Street, Suite 1400, Honolulu, HI 96813, phone: (808) 522–8220 or fax: (808) 522–8226.

Agenda for 134th SSC Meeting

Tuesday, October 15, 2019, 8:30 a.m. to 5 p.m.

1. Introductions
2. Approval of Draft Agenda and Assignment of Rapporteurs
3. Status of the 132nd and 133rd SSC Meeting Recommendations
4. Report from Pacific Islands Fisheries Science Center (PIFSC) Director
5. Program Planning and Research

A. Fishing Community Perceptions on of the Marine Protected Area (MPA) Siting Process and its Implications
B. Report on SSC Working Group on National Standard (NS) 1 Technical Guidance on Phase-Ins and Carry-Over
C. Report on the Pacific Insular Fisheries Monitoring Assessment Planning Summit (PIFMAPS)
D. Updates to the Spatial Management Workshop Planning
E. Report to Congress on Section 201 of Modernizing Recreational Fisheries Act
F. Report on the 2019 Annual Climate Change Collaborative
G. Public Comment
H. SSC Discussion and Recommendations

6. Island Fisheries

A. Report on the Western Pacific Stock Assessment Review (WPSAR) of the Territorial Bottomfish Benchmark Stock Assessment
B. Peer-Reviewed Benchmark Stock Assessment of the Bottomfish Management Unit Species Complex in American Samoa, Guam and Commonwealth of Northern Mariana Islands (CNMI)
C. Guam Reef Fish Stock Assessment
D. Review of the Terms of Reference for the Main Hawaiian Islands *Aprion virescens* (uku) Benchmark Stock Assessment
E. Public Comment
F. SSC Discussion and Recommendations

Wednesday October 16, 2019, 8:30 a.m. to 5 p.m.

7. Protected Species
A. False Killer Whale Abundance Estimates
B. Updates on Endangered Species Act (ESA) and Marine Mammal Protection Act (MMPA) Actions
1. Status of ESA Consultations for the Hawaii Deep-Set Longline, American Samoa Longline, and Bottomfish Fisheries
2. Southern Exclusion Zone Potential Reopening Date
3. Insular False Killer Whale Recovery Plan
C. Public Comment
D. SSC Discussion and Recommendations
8. Pelagic Fisheries
A. American Samoa Longline Fishery Report
B. Hawaii Longline Report Fishery Report
C. Oceanic Whitetip Shark Assessment and Projections
D. Pelagic Fisheries Research Plan Updates
E. Update on Electronic Reporting in the Hawaii Longline Fisheries
F. Assessing Population Level Impacts of Marine Turtle Interactions in the Hawaii and American Samoa Longline Fisheries
G. Evaluating Additional Mitigation Measures under the Hawaii Shallow-set Longline Fishery Biological Opinion Reasonable and Prudent Measures
H. International Fisheries Meetings
1. Inter-American Tropical Tuna Commission (IATTC) Annual Meeting
2. 19th International Science Committee (ISC) Plenary Outcomes
3. 15th Western-Central Pacific Fisheries Commission (WCPFC) Science Committee (SC)
4. WCPFC Technical and Compliance Committee
5. WCPFC Permanent Advisory Committee
6. WCPFC Northern Committee
I. Public Comment
J. SSC Discussion and Recommendations

Thursday October 17, 2019, 8:30 a.m.–5 p.m.

9. Other Business
A. 2020 SSC Meetings Dates
10. Summary of SSC Recommendations to the Council

Agenda for the REAC Meeting

Friday, October 18, 2019, 9 a.m.–3 p.m.

1. Welcome and Introductions
2. Overview of the REAC 2018 meeting
3. Information Sourcing for Local Fishery Ecosystem Impacts of Climate Change
4. Information Sourcing for Local Data Sources to Support Research
5. Setting Local Research Priorities for Climate Change Impacts on the Fishery Ecosystem (Including Pelagics)
6. Geographic Information System (GIS) Mapping of Fishing Grounds and Coral Reef Coverage
7. Climate Change Adaptation Framework
8. Sanctuary Action Plan(s)
9. Discussion on Coral Reef Grant Projects
10. Public Comment
11. Other Business
12. Discussion and Recommendations

Agenda for the AP Meeting

Friday, October 18, 2019, 4 p.m.–6 p.m.

1. Welcome and Introductions
2. Review of the last AP meeting and recommendations
3. 180th Council Meeting Action Items and Issues
A. Territorial Bottomfish Stock Assessment
B. Pacific Insular Fisheries Monitoring and Assessment Planning Summit
4. American Samoa Reports
A. Community Report
B. Education Report
C. Island Report
D. Legislative Report
5. Island Fishery Issues & Activities
A. Issues
1. US Coast Guard (USCG) Rotation Working Group Report
B. Activities
1. Longline Fresh Fish Sustainable Fisheries Fund (SFF) Project
2. Bottomfish Training SFF Project
3. American Samoa Education and Outreach SFF Project
6. Public Comments
7. Discussion and Recommendations
8. Other Business

Agenda for Executive and Budget Standing Committee

Monday, October 21, 2019, 8:30 a.m.–10:30 a.m.

1. Financial Reports
A. Current Grants
B. New Grants
2. Administrative Reports
3. Freedom of Information Act (FOIAs) and Congressional Requests
4. Council Statement Organization Practices and Procedures (SOPP)
5. Policy on Indirect Cost
6. Council Coordinating Committee (CCC)
A. Geographic Strategic Plan
B. Council Member Ongoing Development
7. Council Family Changes
8. Meetings and Workshops
9. Election of Officers
10. Other Issues
11. Public Comment
12. Discussion and Recommendations

Agenda for the Pelagic and International Standing Committee

Monday, October 21, 2019 10:30 a.m.–12:30 p.m.

1. Hawaii Longline Fishery Report
2. American Samoa Longline Fishery Report
3. Status of ESA Consultations
4. Evaluating Additional Mitigation Measures under the Hawaii Shallow-set Longline Fishery Biological Opinion Reasonable and Prudent Measures
5. Update on Electronic Reporting in Hawaii Longline Fisheries
6. International Fisheries
A. 2019 IATTC Commission Meeting
B. WCPFC 15th Science Committee
C. 19th ISC Plenary
D. Updates to United National (UN) Intergovernmental Conference on Biodiversity Beyond National Jurisdiction (BBNJ)
7. Advisory Group Report and Recommendations
A. Advisory Panel
B. SSC
8. Public Comment
9. Standing Committee Recommendations

Agenda for 180th Council Meeting

Tuesday, October 22, 2019, 9 a.m.–5 p.m.

1. Welcoming Ceremony
2. Remarks by Honorable Governor Lolo Matalasi Moliga
3. Welcome and Introductions
4. Oath of Office
5. Approval of the 180th Agenda
6. Approval of the 178th and 179th Meeting Minutes
7. Executive Director's Report
8. Agency Reports
A. National Marine Fisheries Service
1. Pacific Islands Regional Office
2. PIFSC
B. NOAA Office of General Counsel, Pacific Islands Section
C. National Marine Sanctuary Update
D. U.S. State Department
E. U.S. Fish and Wildlife Service
F. Enforcement
1. U.S. Coast Guard
a. Report on USCG Rotation Working Group Meeting
2. NOAA Office of Law Enforcement
3. NOAA Office of General Counsel, Enforcement Section
G. Public Comment
H. Council Discussion and Action
9. American Samoa Archipelago
A. Motu Lipoti
1. Data Collection Programs and Fishery Presentations
2. Report on Data Collection Improvement Efforts from PIFMAPS
3. National Marine Sanctuary of American Samoa Research Plan
B. Fono Report
C. Enforcement Issues
1. Marine Safety Detachment Rotation Update
D. Community Activities and Issues
1. American Samoa Ocean Plan
2. American Samoa Gross Domestic Product and Importance of the Cannery
3. American Samoa Government Development Projects
a. Aunu'u Alia Development Project
b. Malaloa Dock Expansion
c. Longline Fresh Fish Project
d. Bottomfish Fresh Fish Project
4. Fagatogo Fish Market
5. Fishing Tournaments
a. 2nd Pago Pago Open Fishing Tournament
b. 1st All Manua Alia Fishing Tournament
E. Education and Outreach Initiatives
1. AS High School Summer Course Recap
F. Advisory Group Report and Recommendations
1. American Samoa Fishery Ecosystem Plan AP
2. American Samoa REAC
3. SSC
G. Public Comment
H. Council Discussion and Action

Tuesday, October 22, 2019, 4 p.m.–5 p.m.

10. Public Comment on Non-Agenda Items

Tuesday, October 22, 2019, 6 p.m.–9 p.m.

Fishers Forum—Palolo Harvest: Science and Traditions

Wednesday, October 23, 2019, 8:30 a.m.–5 p.m.

11. Pelagic & International Fisheries
A. American Samoa Longline Annual Fishery Report
B. Hawaii Longline Annual Fishery Report
C. Oceanic Whitetip Shark Stock Assessment and Projections
D. Evaluating Additional Mitigation Measures under the Hawaii Shallow-set Longline Fishery Biological Opinion Reasonable and Prudent Measures
E. Assessing Population Level Impacts of Marine Turtle Interactions in the Hawaii and American Samoa Longline Fisheries
F. Electronic Reporting in the Hawaii Longline Fishery
1. Status of Electronic Reporting Implementation
2. Mandatory Electronic Reporting
G. International Fisheries
1. IATTC Commission Meeting
2. WCPFC
a. 19th ISC Plenary
b. 15th Science Committee
c. 15th Technical and Compliance Committee
d. 15th Northern Committee
e. Permanent Advisory Committee
3. North Pacific Fisheries Commission
a. 4th Technical and Compliance Committee
b. 5th Annual Session of the Commission
4. 3rd Session of the BBNJ Conference
H. Advisory Group Report and Recommendations
1. AP
2. REAC
3. SSC
I. Standing Committee Report and Recommendations
J. Public Comment
K. Council Discussion and Action
12. Protected Species
A. Northwest Hawaiian Islands Green Turtle Research Update
B. False Killer Whale Abundance Estimates
C. Updates on ESA and MMPA Actions
1. Status of ESA Consultations for the Hawaii Deep-Set Longline, American Samoa Longline, and Bottomfish Fisheries
2. Southern Exclusion Zone Potential Reopening Date
3. Insular False Killer Whale Recovery Plan
4. Status of Recovery Plan Implementation for Pacific Green Turtle Populations
D. Advisory Group Report and Recommendations
1. AP
2. REAC
3. SSC
E. Public Comment
F. Council Discussion and Action
13. Program Planning and Research
A. Legislative Report
B. Report on the WPSAR of the Territorial Bottomfish Benchmark Stock Assessment
C. Peer-Reviewed Benchmark Stock Assessment of the Bottomfish Management Unit Species Complex in American Samoa, Guam and CNMI
D. Report on the NS1 Subgroup on Carry-Over and Phase-Ins
E. Report on the CCC Habitat Working Group Workshop
F. Pacific Insular Fisheries Monitoring and Assessment Planning Summit
G. Report to Congress on Section 201 of Modernizing Recreational Fisheries Act
H. Updates to the Spatial Management Workshop Planning
I. Report on the Annual Climate Change Collaborative Meeting
J. OceanObs 19
K. First Stewards
L. Deep Sea Mining Watch and Mining Expansion
M. Regional, National, & International Outreach & Education
N. Advisory Group Report and Recommendations
1. REAC
2. AP
3. SSC
O. Public Comment
P. Council Discussion and Action

Thursday, October 24, 2019, 8:30 a.m.–12 p.m.

14. Mariana Archipelago
A. Guam
1. Isla Informe
a. Report on Data Collection Improvement Efforts from PIFMAPS
2. Legislative Report
a. SCUBA ban bill
b. Fishing License Update
3. Enforcement Issues
4. Community Activities and Issues
a. Update on Marine Conservation Plan (MCP) Review
5. Guam Reef Fish Stock Assessment
6. Education and Outreach Initiatives
a. High School Summer Course Recap
b. Guam Fisherman Cooperative Association International Derby
B. CNMI
1. Arongol Falú
a. Report on Data Collection Improvement Efforts from PIFMAPS
2. Legislative Report
a. Surround net bill
b. Sunscreen bill
c. Minimum size bill
3. Enforcement Issues
4. Community Activities and Issues
a. Update on MCP Review
b. Garapan Fishing Base Update
c. Bottomfish Training Project
d. Mandatory Data Regulations Update
5. Education and Outreach Initiatives
a. Fishing Tournaments and Derbies
b. High School Summer Course Recap
C. Advisory Group Reports and Recommendations
1. Mariana Archipelago Fishery Ecosystem Plan AP
2. REAC
a. Guam REAC
b. CNMI REAC
3. SSC
D. Public Comment
E. Council Discussion and Action
15. Hawaii Archipelago & Pacific Remote Island Areas
A. Moku Pepa
B. Legislative Report
C. Enforcement Issues
D. Ocean Resource Management of Hawaii
E. Review of the Terms of Reference for the Main Hawaiian Islands *Aprion virescens* (uku) Benchmark Stock Assessment
F. Updates on the Hawaii BioSampling Project
G. Review of Hawaii Small-Boat Fishery Performance under the Fishery Ecosystem Plans
G. Education and Outreach Initiatives
H. Advisory Group Report and Recommendations
1. Hawaii Archipelago Fishery Ecosystem Plan AP
2. Guam REAC
3. CNMI REAC
4. SSC
I. Public Comment
J. Council Discussion and Action
16. Administrative Matters
A. Ethics Training
B. Financial Reports
C. Administrative Reports
D. Statement Organization Practices and Procedures
E. Policy on Indirect Cost
F. CCC—Council Member Ongoing Development
G. Geographic Strategic Plan
H. Council Family Changes
I. Meetings and Workshops
J. Standing Committee Report and Recommendations
K. Public Comment
L. Council Discussion and Action
17. Election of Officers
18. Other Business

Non-emergency issues not contained in this agenda may come before the Council for discussion and formal Council action during its 180th meeting. However, Council action on regulatory issues will be restricted to those issues specifically listed in this document and any regulatory issue arising after publication of this document that requires emergency action under section 305(c) of the Magnuson-Stevens Act, provided the public has been notified of the Council's intent to take action to address the emergency.

Special Accommodations

These meetings are accessible to people with disabilities. Requests for sign language interpretation or other auxiliary aids should be directed to Kitty M. Simonds, (808) 522–8220 (voice) or (808) 522–8226 (fax), at least 5 days prior to the meeting date.

Authority: 16 U.S.C. 1801 *et seq.*

Dated: September 25, 2019.

Tracey L. Thompson,

Acting Deputy Director, Office of Sustainable Fisheries, National Marine Fisheries Service.

[FR Doc. 2019–21163 Filed 9–27–19; 8:45 am]

BILLING CODE 3510–22–P

DEPARTMENT OF COMMERCE

Patent and Trademark Office

[Docket No. PTO–C–2019–0029]

Request for Comments on Patenting Artificial Intelligence Inventions

AGENCY: United States Patent and Trademark Office, Department of Commerce.

ACTION: Request for comments; extension of comment period.

SUMMARY: The United States Patent and Trademark Office (USPTO) published a request for comments in the **Federal Register** on August 27, 2019, seeking public comment on the subject of patenting artificial intelligence inventions. Through this notice, the USPTO is extending the period for public comment until November 8, 2019.

DATES: Written comments must be received on or before November 8, 2019.

ADDRESSES: Written comments should be sent by email to *AIPartnership@uspto.gov*. Comments may also be submitted by postal mail addressed to the Director of the United States Patent and Trademark Office, P.O. Box 1450, Alexandria VA 22313–1450. Although comments may be submitted by postal mail, the USPTO prefers to receive comments via email. Because written comments will be made available for public inspection, information that a respondent does not desire to be made public, such as a phone number, should not be included in the written comments.

FOR FURTHER INFORMATION CONTACT: Coke Stewart, Senior Policy Advisor, the Office of the Under Secretary and Director of the USPTO, (571) 272–8600.

SUPPLEMENTARY INFORMATION: On August 27, 2019, the United States Patent and Trademark Office published a notice in the **Federal Register** requesting public input on patent-related issues regarding artificial intelligence inventions for purposes of evaluating whether further examination guidance is needed to promote the reliability and predictability of patenting artificial intelligence inventions. See Request for Comments on Patenting Artificial Intelligence Inventions, 84 FR 44889 (Aug. 27, 2019). The notice requested public comments on or before October 11, 2019. Through this notice, the USPTO is extending the period for public comment until November 8, 2019, to give interested members of the public additional time to submit comments. All other information and instructions to commenters provided in the original notice remain unchanged. Previously submitted comments do not need to be resubmitted.

Andrei Iancu,

Under Secretary of Commerce for Intellectual Property and Director of the United States Patent and Trademark Office.

[FR Doc. 2019–21190 Filed 9–27–19; 8:45 am]

BILLING CODE 3510–16–P

COMMODITY FUTURES TRADING COMMISSION

Agency Information Collection Activities Under OMB Review

AGENCY: Commodity Futures Trading Commission.

ACTION: Notice.

SUMMARY: In compliance with the Paperwork Reduction Act of 1995 (''PRA''), this notice announces that the Information Collection Request (''ICR'') abstracted below has been forwarded to the Office of Management and Budget (''OMB'') for review and comment. The ICR describes the nature of the information collection and its expected costs and burden.

DATES: Comments must be submitted on or before October 30, 2019.

ADDRESSES: Comments regarding the burden estimate or any other aspect of the information collection, including suggestions for reducing the burden, may be submitted directly to the Office of Information and Regulatory Affairs (''OIRA'') in OMB within 30 days of this notice's publication by either of the following methods. Please identify the comments by ''OMB Control No. 3038–0067.''

- *By email addressed to: OIRAsubmissions@omb.eop.gov* or
- *By mail addressed to:* The Office of Information and Regulatory Affairs, Office of Management and Budget, Attention Desk Officer for the Commodity Futures Trading Commission, 725 17th Street NW, Washington DC 20503.

A copy of all comments submitted to OIRA should be sent to the Commodity Futures Trading Commission (''CFTC'' or ''Commission'') by either of the following methods. The copies should refer to ''OMB Control No. 3038–0067.''

- *By mail addressed to:* Christopher Kirkpatrick, Secretary of the Commission, Commodity Futures Trading Commission, Three Lafayette Centre, 1155 21st Street NW, Washington, DC 20581;
- By Hand Delivery/Courier to the same address; or
- Through the Commission's website at *http://comments.cftc.gov.* Please follow the instructions for submitting comments through the website.

Please submit your comments to the Commission using only one method. A copy of the supporting statement for the collection of information discussed herein may be obtained by visiting *http://RegInfo.gov.*

All comments must be submitted in English, or if not, accompanied by an English translation. Comments will be posted as received to *http://www.cftc.gov.* You should submit only information that you wish to make available publicly. If you wish the Commission to consider information that you believe is exempt from disclosure under the Freedom of Information Act, a petition for confidential treatment of the exempt information may be submitted according to the procedures established in § 145.9 of the Commission's regulations.[1] The Commission reserves the right, but shall have no obligation, to review, pre-screen, filter, redact, refuse or remove any or all of your submission from *http://www.cftc.gov* that it may deem to be inappropriate for publication, such as obscene language. All submissions that have been redacted or removed that contain comments on the merits of the ICR will be retained in the public comment file and will be considered as required under the Administrative Procedure Act and other applicable laws, and may be accessible under the Freedom of Information Act.

FOR FURTHER INFORMATION CONTACT: Jacob Chachkin, Special Counsel, Division of Swap Dealer and Intermediary Oversight, Commodity Futures Trading Commission, (202) 418–5496, email: *jchachkin@cftc.gov,* and refer to OMB Control No. 3038–0067.

SUPPLEMENTARY INFORMATION:

Title: Part 162—Protection of Consumer Information under the Fair Credit Reporting Act (OMB Control No. 3038–0067). This is a request for an extension of a currently approved information collection.

Abstract: On July 21, 2010, President Obama signed into law the Dodd-Frank Wall Street Reform and Consumer Protection Act (''Dodd-Frank Act'').[2] Title X of the Dodd-Frank Act, which is titled the Consumer Financial Protection Act of 2010 (''CFP Act''), amends a number of federal consumer protection laws enacted prior to the Dodd-Frank Act including, in relevant part, the Fair Credit Reporting Act (''FCRA'')[3] and the Fair and Accurate

[1] 17 CFR 145.9.

[2] Public Law 111–203, 124 Stat. 1376 (2010).

[3] 15 U.S.C. 1681–1681x.

Credit Transactions Act of 2003 (''FACT Act'').[4] Specifically, Section 1088 of the CFP Act sets out certain amendments to the FCRA and the FACT Act directing the Commission to promulgate regulations that are intended to provide privacy protections to certain consumer information held by an entity that is subject to the jurisdiction of the Commission.

Section 1088 amends section 214(b) of the FACT Act—which added section 624 to the FCRA in 2003—and directs the Commission to implement the provisions of section 624 of the FCRA with respect to persons that are subject to the Commission's enforcement jurisdiction. Section 624 of the FCRA gives a consumer the right to block affiliates of an entity subject to the Commission's jurisdiction from using certain information obtained from such entity to make solicitations to that consumer (hereinafter referred to as the ''affiliate marketing rules'').[5] Under the affiliate marketing rules, the entities covered by the regulations are expected to prepare and provide clear, conspicuous and concise opt-out notices to any consumers with whom such entities have a pre-existing business relationship. A covered entity only has to provide an opt-out notice to the extent that an affiliate of the covered entity plans to make a solicitation to any of the covered entity's consumers. The purpose of the opt-out notice is to provide consumers with the ability to prohibit marketing solicitations from affiliate businesses that do not have a pre-existing business relationship with the consumers, but that do have access to such consumers' nonpublic, personal information. A covered entity is required to send opt-out notices at the maximum of once every five years.

Section 1088 of the CFP Act also amends section 628 of the FCRA and mandates that the Commission implement regulations requiring persons subject to the Commission's jurisdiction who possess or maintain consumer report information in connection with their business activities to properly dispose of that information (hereinafter referred to as the ''disposal rules'').[6] Under the disposal rules, the entities covered by the regulations are expected to develop and implement a written disposal plan with respect to any consumer information within such entities' possession. The regulations provide that a covered entity develop a written disposal plan that is tailored to the size and complexity of such entity's business. The purpose of the written disposal plan is to establish a formal plan for the disposal of nonpublic, consumer information, which otherwise could be illegally confiscated and used by unauthorized third parties. Under the rules, a covered entity is required to develop a written disposal plan only once, but may subsequently amend such plan from time to time.

In addition, Section 1088 of the CFP Act amended the FCRA by adding the CFTC and the Securities and Exchange Commission (''SEC,'' together with the CFTC, the ''Commissions'') to the list of federal agencies required to jointly prescribe and enforce identity theft red flags rules and guidelines and card issuer rules. Thus, the Dodd-Frank Act provides for the transfer of rulemaking responsibility and enforcement authority to the CFTC and SEC with respect to the entities under their respective jurisdiction. Accordingly, the Commissions have issued final rules and guidelines (hereinafter referred to as the ''identity theft rules'')[7] to implement new statutory provisions enacted by the CFP Act that amend section 615(e) of the FCRA and direct the Commissions to prescribe rules requiring entities that are subject to the Commissions' jurisdiction to address identity theft. Under the identity theft rules, entities covered by the regulation are required to develop and implement reasonable policies and procedures to identify, detect, and respond to relevant red flags for identity theft that are appropriate to the size and complexity of such entity's business and, in the case of entities that issue credit or debit cards, to assess the validity of, and communicate with cardholders regarding, address changes.[8] They are also required to provide for the continued administration of identity theft policies and procedures.

An agency may not conduct or sponsor, and a person is not required to respond to, a collection of information unless it displays a currently valid OMB control number. On July 26, 2019, the Commission published in the **Federal Register** notice of the proposed extension of this information collection and provided 60 days for public comment on the proposed extension, 84 FR 36086 (''60-Day Notice''). The Commission did not receive any relevant comments on the 60-Day Notice.

Burden Statement: The Commission is revising its burden estimate for this collection to reflect its estimate of the current number of CFTC registrants subject to the requirements of part 162 regulations. In addition, this burden estimate reflects the total burden hours from the affiliate marketing rules (subpart A), the disposal rules (subpart B), and the identity theft rules (subpart C)—the first two categories of which were inadvertently omitted from previous renewals. Thus the current renewal aims to correct past omissions by including burden calculations from all three categories under part 162.

Accordingly, the respondent burden for this collection is estimated to be as follows:

Estimated Number of Respondents: 4,488.

Estimated Average Burden Hours per Respondent: 13.25.[9]

Estimated Total Annual Burden Hours: 59,459.

Frequency of Collection: As applicable.

There are no capital costs or operating and maintenance costs associated with this collection.

Authority: 44 U.S.C. 3501 *et seq.*

Dated: September 24, 2019.

Robert Sidman,

Deputy Secretary of the Commission.

[FR Doc. 2019–21077 Filed 9–27–19; 8:45 am]

BILLING CODE 6351–01–P

[4] Public Law 108–159, 117 Stat. 1952, 1980 (2003).

[5] The affiliate marketing rules are found in part 162, subpart A (Business Affiliate Marketing Rules) of the CFTC's regulations. 17 CFR part 162, subpart A.

[6] The disposal rules are found in part 162, subpart B (Disposal Rules) of the CFTC's regulations. 17 CFR part 162, subpart B.

[7] The CFTC's identity theft rules are found in part 162, subpart C (Identity Theft Red Flags) of the CFTC's regulations. 17 CFR part 162, subpart C.

[8] The CFTC understands that CFTC-regulated entities generally do not issue credit or debit cards, but instead may partner with other entities, such as banks, that issue cards on their behalf. These other entities, which are not regulated by the CFTC, are already subject to substantially similar change of address obligations pursuant to other federal regulators' identity theft red flags rules. Therefore, the CFTC does not expect that any CFTC-regulated entities will be subject to the related information collection requirements under the CFTC's identity theft rules.

[9] This number reflects the average aggregate burden hours, per respondent, in response to: (a) disclosure (1 hr.) and recordkeeping requirements (3.5 hrs) under the affiliate marketing rules, (b) recordkeeping requirements under the disposal rules (5.9 hrs), and (c) recordkeeping requirements under the identity theft rules (2.85 hrs).

CORPORATION FOR NATIONAL AND COMMUNITY SERVICE

Agency Information Collection Activities; Submission to the Office of Management and Budget for Review and Approval; Comment Request; Generic Clearance for the Collection of Qualitative Feedback on Agency Service Delivery

AGENCY: Corporation for National and Community Service (CNCS).

ACTION: Notice of information collection; request for comment.

SUMMARY: In accordance with the Paperwork Reduction Act of 1995, CNCS is proposing to renew an information collection.

DATES: Written comments must be submitted to the individual and office listed in the **ADDRESSES** section by November 29, 2019.

ADDRESSES: You may submit comments, identified by the title of the information collection activity, by any of the following methods:

(1) By mail sent to: Corporation for National and Community Service; Attention Amy Borgstrom; 250 E Street SW, Washington, DC 20525.

(2) By hand delivery or by courier to the CNCS mailroom at the address above between 9:00 a.m. and 4:00 p.m. Eastern Time, Monday through Friday, except federal holidays.

(3) Electronically through *www.regulations.gov.*

Comments submitted in response to this Notice will be made available to the public through *www.regulations.gov.* For this reason, please do not include in your comments information of a confidential nature, such as sensitive personal information or proprietary information. If you send an email comment, your email address will be automatically captured and included as part of the comment that is placed in the public docket and made available on the internet. Please note that responses to this public comment request containing any routine notice about the confidentiality of the communication will be treated as public comments that may be made available to the public notwithstanding the inclusion of the routine notice.

FOR FURTHER INFORMATION CONTACT: Amy Borgstrom by email at *aborgstrom@cns.gov* or by phone at 202–606–6930.

SUPPLEMENTARY INFORMATION:

Title of Collection: Generic Clearance for the Collection of Qualitative Feedback on Agency Service Delivery.

OMB Control Number: 3045–0137.

Type of Review: Renewal.

Respondents/Affected Public: Individuals and Households.

Total Estimated Number of Annual Responses: 15,000.

Total Estimated Number of Annual Burden Hours: 2,500.

Abstract: The proposed information collection activity provides a means to elicit qualitative customer and stakeholder feedback in an efficient, timely manner. By qualitative feedback we mean information that provides useful insights on perceptions and opinions but are not statistical surveys that yield quantitative results that can be generalized to the population of study. This feedback will provide insights into customer or stakeholder perceptions, experiences and expectations, provide an early warning of issues with service, or focus attention on areas where communication, training or changes in operations might improve delivery of products or services. These collections will allow for ongoing, collaborative, and actionable communications between the agency and its customers and stakeholders. It will also allow feedback to contribute directly to the improvement of program management.

The solicitation of feedback will target areas such as: Timeliness, appropriateness, accuracy of information, courtesy, efficiency of service delivery, and resolution of issues with service delivery. Responses will be assessed to plan and inform efforts to improve or maintain the quality of service offered to the public. If this information is not collected, vital feedback from customers and stakeholders on the agency's services will be unavailable.

CNCS will only submit a collection for approval under this generic clearance if the collection is:

- Voluntary;
- Low-burden for respondents (based on considerations of total burden hours, total number of respondents, or burden-hours per respondent) and low-cost for both the respondents and the federal government;
- Non-controversial and does not raise issues of concern to other federal agencies;
- Targeted to the solicitation of opinions from respondents who have experience with the program or may have experience with the program in the near future;
- Not collecting personally-identifiable information (PII) except to the extent necessary and that is not retained;
- Used only internally for general service improvement and program management purposes and is not intended for release outside of the agency;
- Not used for the purpose of substantially informing influential policy decisions;
- Focused on qualitative information; the collections will not be designed or expected to yield statistically reliable results or used as though the results are generalizable to the population of study.

Comments submitted in response to this notice will be summarized and/or included in the request for OMB approval. Comments are invited on: (a) Whether the collection of information is necessary for the proper performance of the functions of the agency, including whether the information shall have practical utility; (b) the accuracy of the agency's estimate of the burden of the collection of information; (c) ways to enhance the quality, utility, and clarity of the information to be collected; (d) ways to minimize the burden of the collection of information on respondents, including through the use of automated collection techniques or other forms of information technology; and (e) estimates of capital or start-up costs and costs of operation, maintenance, and purchase of services to provide information. Burden means the total time, effort, or financial resources expended by persons to generate, maintain, retain, disclose or provide information to or for a federal agency. This includes the time needed to review instructions; to develop, acquire, install, and utilize technology and systems for the purpose of collecting, validating and verifying information, processing and maintaining information, and disclosing and providing information; to train personnel and to be able to respond to a collection of information, to search data sources, to complete and review the collection of information; and to transmit or otherwise disclose the information. All written comments will be available for public inspection on *regulations.gov.*

Dated: September 25, 2019.

Amy Borgstrom,

Associate Director of Policy.

[FR Doc. 2019–21192 Filed 9–27–19; 8:45 am]

BILLING CODE 6050–28–P

DEPARTMENT OF DEFENSE

Department of the Army

Board of Visitors, United States Military Academy (USMA)

AGENCY: Department of the Army, DoD.

ACTION: Notice of committee meeting.

SUMMARY: Under the provisions of the Federal Advisory Committee Act of 1972, the Government in the Sunshine Act of 1976, the Department of Defense announces that the following Federal advisory committee meeting will take place.

DATES: The meeting will be held on Tuesday, October 22, 2019, Time 1:30 p.m.–4:30 p.m. Members of the public wishing to attend the meeting will be required to show a government photo ID upon entering in order to gain access to the meeting location. All members of the public are subject to security screening.

ADDRESSES: The meeting will be held in Room LJ–119, Library of Congress, Thomas Jefferson Building, 10 First Street SE, Washington, DC.

FOR FURTHER INFORMATION CONTACT: Mrs. Deadra K. Ghostlaw, the Designated Federal Officer for the committee, in writing at: Secretary of the General Staff, ATTN: Deadra K. Ghostlaw, 646 Swift Road, West Point, NY 10996; by email at: *deadra.ghostlaw@westpoint.edu* or *BoV@westpoint.edu*; or by telephone at (845) 938–4200.

SUPPLEMENTARY INFORMATION: The committee meeting is being held under the provisions of the Federal Advisory Committee Act of 1972 (5 U.S.C., Appendix, as amended), the Government in the Sunshine Act of 1976 (5 U.S.C. 552b, as amended), and 41 CFR 102–3.150. The USMA BoV provides independent advice and recommendations to the President of the United States on matters related to morale, discipline, curriculum, instruction, physical equipment, fiscal affairs, academic methods, and any other matters relating to the Academy that the Board decides to consider.

Purpose of the Meeting: This is the 2019 Annual Meeting of the USMA BoV. Members of the Board will be provided updates on Academy issues. Agenda: Introduction; Board Business: Approval of the Minutes from May's Meeting, Status of the 2018 Annual Report. West Point Update; Significant Events Since Last Meeting: Imperative 1—Leaders of Character, Develop Leaders of Character, Cultivate Culture of Character Growth; Relevance and Preeminence—Build Effective and Diverse Teams, Modernize, Sustain and Secure, Strengthen Partnerships; Middle States Commission on Higher Education (MSCHE) Update; Upcoming Events; Closing Comments.

Public's Accessibility to the Meeting: Pursuant to 5 U.S.C. 552b and 41 CFR 102–3.140 through 102–3.165 and subject to the availability of space, this meeting is open to the public. Seating is on a first to arrive basis. Attendees are requested to submit their name, affiliation, and daytime phone number seven business days prior to the meeting to Mrs. Ghostlaw, via electronic mail, the preferred mode of submission, at the address listed in the **FOR FURTHER INFORMATION CONTACT** section. Pursuant to 41 CFR 102–3.140d, the committee is not obligated to allow a member of the public to speak or otherwise address the committee during the meeting, and members of the public attending the committee meeting will not be permitted to present questions from the floor or speak to any issue under consideration by the committee. Because the committee meeting will be held in a Federal Government facility security screening is required. A government photo ID is required to enter the building. The Thomas Jefferson Building is fully handicapped accessible. Wheelchair access is available at the entrance on First Street SE at the Driveway Level, and at the Ground Level, Carriage Entrance—Underneath the Grand Staircase. Please let Mrs. Ghostlaw know if you have a disability as defined by the ADA and require parking.

For additional information about public access procedures, contact Mrs. Ghostlaw, the committee's Designated Federal Officer, at the email address or telephone number listed in the **FOR FURTHER INFORMATION CONTACT** section.

Written Comments or Statements: Pursuant to 41 CFR 102–3.105(j) and 102–3.140 and section 10(a)(3) of the Federal Advisory Committee Act, the public or interested organizations may submit written comments or statements to the committee, in response to the stated agenda of the open meeting or in regard to the committee's mission in general. Written comments or statements should be submitted to Mrs. Ghostlaw, the committee Designated Federal Officer, via electronic mail, the preferred mode of submission, at the address listed in the **FOR FURTHER INFORMATION CONTACT** section. Each page of the comment or statement must include the author's name, title or affiliation, address, and daytime phone number. Written comments or statements should be submitted to Mrs. Ghostlaw, the committee Designated Federal Officer, via electronic mail, the preferred mode of submission, at the address listed in the **FOR FURTHER INFORMATION CONTACT** section. Written comments or statements being submitted in response to the agenda set forth in this notice must be received by the Designated Federal Official at least seven business days prior to the meeting to be considered by the committee. The Designated Federal Official will review all timely submitted written comments or statements with the committee Chairperson and ensure the comments are provided to all members of the committee before the meeting. Written comments or statements received after this date may not be provided to the committee until its next meeting.

Pursuant to 41 CFR 102–3.140d, the committee is not obligated to allow a member of the public to speak or otherwise address the committee during the meeting. However, the committee Designated Federal Official and Chairperson may choose to invite certain submitters to present their comments verbally during the open portion of this meeting or at a future meeting. The Designated Federal Officer, in consultation with the committee Chairperson, may allot a specific amount of time for submitters to present their comments verbally.

E. Casey Wardynski,

Assistant Secretary of the Army for Manpower and Reserve Affairs.

[FR Doc. 2019–21184 Filed 9–27–19; 8:45 am]

BILLING CODE 5001–03–P

DEPARTMENT OF DEFENSE

Department of the Army

[Docket ID: USA–2019–HQ–0023]

Submission for OMB Review; Comment Request

AGENCY: Office of the Assistant Secretary of the Army for Civil Works (ASA(CW)), U.S. Army Corps of Engineers, DoD.

ACTION: 30-Day information collection notice.

SUMMARY: The Department of Defense has submitted to OMB for clearance the following proposal for collection of information under the provisions of the Paperwork Reduction Act.

DATES: Consideration will be given to all comments received by October 30, 2019.

ADDRESSES: Comments and recommendations on the proposed information collection should be emailed to Mr. Vlad Dorjets, DoD Desk Officer, at *oira_submission@omb.eop.gov.* Please identify the proposed information collection by DoD Desk Officer, Docket ID number, and title of the information collection.

FOR FURTHER INFORMATION CONTACT: Angela James, 571–372–7574, or *whs.mc-alex.esd.mbx.dd-dod-information-collections@mail.mil.*

SUPPLEMENTARY INFORMATION:

Title; Associated Form; and OMB Number: 2019 Agricultural Shipper Transportation Needs Survey—Ohio River System; OMB Control Number 0710–XXXX.

Type of Request: New.

Number of Respondents: 1,174.

Responses per Respondent: 1.

Annual Responses: 1,174.

Average Burden per Response: 15 minutes

Annual Burden Hours: 293.5.

Needs and Uses: The data obtained from these surveys are used by the Army Corps of Engineers to estimate the shipper's response to changes in waterway attributes (such as congestion, reliability, rates and travel time). Hence, the overall objective of the proposed research is to develop shipper response function estimates for the Ohio River Waterway System.

Affected Public: Business or other For-Profit. All commercial commodity shippers, with a focus on grain as the primary commodity in the Ohio River Navigational system. For the purposes of this study, a shipper is defined as a company that sends or transports the good.

Frequency: On occasion.

Respondent's Obligation: Voluntary.

OMB Desk Officer: Mr. Vlad Dorjets.

You may also submit comments and recommendations, identified by Docket ID number and title, by the following method:

• *Federal eRulemaking Portal: http://www.regulations.gov.* Follow the instructions for submitting comments.

Instructions: All submissions received must include the agency name, Docket ID number, and title for this **Federal Register** document. The general policy for comments and other submissions from members of the public is to make these submissions available for public viewing on the internet at *http://www.regulations.gov* as they are received without change, including any personal identifiers or contact information.

DOD Clearance Officer: Ms. Angela James.

Requests for copies of the information collection proposal should be sent to Ms. James at *whs.mc-alex.esd.mbx.dd-dod-information-collections@mail.mil.*

Dated: September 25, 2019.

Aaron T. Siegel,

Alternate OSD Federal Register, Liaison Officer, Department of Defense.

[FR Doc. 2019–21191 Filed 9–27–19; 8:45 am]

BILLING CODE 5001–06–P

DEPARTMENT OF DEFENSE

Department of the Army

[Docket ID: USA–2019–HQ–0025]

Submission for OMB Review; Comment Request

AGENCY: Department of the Army, DoD.

ACTION: 30-Day information collection notice.

SUMMARY: The Department of Defense has submitted to OMB for clearance the following proposal for collection of information under the provisions of the Paperwork Reduction Act.

DATES: Consideration will be given to all comments received by October 30, 2019.

ADDRESSES: Comments and recommendations on the proposed information collection should be emailed to Ms. Jasmeet Seehra, DoD Desk Officer, at *oira_submission@omb.eop.gov.* Please identify the proposed information collection by DoD Desk Officer, Docket ID number, and title of the information collection.

FOR FURTHER INFORMATION CONTACT: Angela James, 571–372–7574, or *whs.mc-alex.esd.mbx.dd-dod-information-collections@mail.mil.*

SUPPLEMENTARY INFORMATION:

Title; Associated Form; and OMB Number: Radiation Sources on Army Land; OMB Control Number 0702–0109.

Type of Request: Reinstatement.

Number of Respondents: 235.

Responses per Respondent: 1.

Annual Responses: 235.

Average Burden per Response: 2 Hours.

Annual Burden Hours: 470.

Needs and Uses: The information collection requirement is necessary to regulate the use, storage, or possession of radiation sources by non-Army agencies (including their civilian contractors) on an Army installation. The non-Army applicant will apply by letter, email or facsimile with supporting documentation to the garrison commander through the appropriate tenant commander or garrison director.

The Army radiation permit application will specify the effective date and duration for the Army radiation permit and describe the purposes for which the Army radiation permit is being sought. The application will include identification of the trained operating personnel who will be responsible for implementation of the activities authorized by the permit and a summary of their professional qualifications; the point-of-contact name and phone number for the application; the applicant's radiation safety Standing Operating Procedures (SOPs); storage provisions when the radiation source is not in use; and procedures for notifying the installation of reportable incidents/accidents.

Affected Public: Business or Other For-Profit; Not-For-Profit Institutions; State, Local, or Tribal Government.

Frequency: On occasion.

Respondent's Obligation: Voluntary.

OMB Desk Officer: Ms. Jasmeet Seehra.

You may also submit comments and recommendations, identified by Docket ID number and title, by the following method:

• *Federal eRulemaking Portal: http://www.regulations.gov.* Follow the instructions for submitting comments.

Instructions: All submissions received must include the agency name, Docket ID number, and title for this **Federal Register** document. The general policy for comments and other submissions from members of the public is to make these submissions available for public viewing on the internet at *http://www.regulations.gov* as they are received without change, including any personal identifiers or contact information.

DOD Clearance Officer: Ms. Angela James.

Requests for copies of the information collection proposal should be sent to Ms. James at *whs.mc-alex.esd.mbx.dd-dod-information-collections@mail.mil.*

Dated: September 25, 2019.

Aaron T. Siegel,

Alternate OSD Federal Register Liaison Officer, Department of Defense.

[FR Doc. 2019–21177 Filed 9–27–19; 8:45 am]

BILLING CODE 5001–06–P

DEPARTMENT OF DEFENSE

Office of the Secretary

[Docket ID: DoD–2019–OS–0087]

Submission for OMB Review; Comment Request

AGENCY: Office of the DoD Chief Information Officer, DoD.

ACTION: 30-Day information collection notice.

SUMMARY: The Department of Defense has submitted to OMB for clearance the following proposal for collection of information under the provisions of the Paperwork Reduction Act.

DATES: Consideration will be given to all comments received by October 30, 2019.

ADDRESSES: Comments and recommendations on the proposed

information collection should be emailed to Ms. Jasmeet Seehra, DoD Desk Officer, at *oira_submission@omb.eop.gov.* Please identify the proposed information collection by DoD Desk Officer, Docket ID number, and title of the information collection.

FOR FURTHER INFORMATION CONTACT: Angela James, 571–372–7574, or *whs.mc-alex.esd.mbx.dd-dod-information-collections@mail.mil.*

SUPPLEMENTARY INFORMATION:

Title; Associated Form; and OMB Number: DoD's Defense Industrial Base (DIB) Cybersecurity (CS) Program Point of Contact (POC) Information; OMB Control Number 0704–0490.

Type of Request: Extension.

Number of Respondents: 935.

Responses per Respondent: 1.

Annual Responses: 935.

Average Burden per Response: 20 minutes.

Annual Burden Hours: 312.

Needs and Uses: The information collection requirement is necessary to execute the voluntary Defense Industrial Base (DIB) Cybersecurity (CS) program. DoD will collect business points of contact (POC) information from all DIB CS program participants on a one-time basis, with updates as necessary, to facilitate communications and the sharing of share unclassified and classified cyber threat information.

Affected Public: Business or other for-profit and not-for-profit institutions.

Frequency: On occasion.

Respondent's Obligation: Voluntary.

OMB Desk Officer: Ms. Jasmeet Seehra.

You may also submit comments and recommendations, identified by Docket ID number and title, by the following method:

• *Federal eRulemaking Portal: http://www.regulations.gov.* Follow the instructions for submitting comments.

Instructions: All submissions received must include the agency name, Docket ID number, and title for this **Federal Register** document. The general policy for comments and other submissions from members of the public is to make these submissions available for public viewing on the internet at *http://www.regulations.gov* as they are received without change, including any personal identifiers or contact information.

DOD Clearance Officer: Ms. Angela James.

Requests for copies of the information collection proposal should be sent to Ms. James at *whs.mc-alex.esd.mbx.dd-dod-information-collections@mail.mil.*

Dated: September 25, 2019.

Aaron T. Siegel,

Alternate OSD Federal Register Liaison Officer, Department of Defense.

[FR Doc. 2019–21147 Filed 9–27–19; 8:45 am]

BILLING CODE 5001–06–P

DEPARTMENT OF DEFENSE

Office of the Secretary

[Docket ID: DoD–2019–OS–0083]

Submission for OMB Review; Comment Request

AGENCY: Office of the DoD Chief Information Officer, DoD.

ACTION: 30-Day information collection notice.

SUMMARY: The Department of Defense has submitted to OMB for clearance the following proposal for collection of information under the provisions of the Paperwork Reduction Act.

DATES: Consideration will be given to all comments received by October 30, 2019.

ADDRESSES: Comments and recommendations on the proposed information collection should be emailed to Ms. Jasmeet Seehra, DoD Desk Officer, at *oira_submission@omb.eop.gov.* Please identify the proposed information collection by DoD Desk Officer, Docket ID number, and title of the information collection.

FOR FURTHER INFORMATION CONTACT: Angela James, 571–372–7574, or *whs.mc-alex.esd.mbx.dd-dod-information-collections@mail.mil.*

SUPPLEMENTARY INFORMATION:

Title; Associated Form; and OMB Number: DoD's Defense Industrial Base (DIB) Cybersecurity (CS) Activities Cyber Incident Reporting; OMB Control Number 0704–0489.

Type of Request: Extension.

Number of Respondents: 10,000.

Responses per Respondent: 5.

Annual Responses: 50,000.

Average Burden per Response: 7 Hours.

Annual Burden Hours: 350,000.

Needs and Uses: The information collection requirement is necessary to support mandatory cyber incident reporting requirements under 10 U.S.C. 393 (formerly Pub. L. 112–239, National Defense Authorization Act for Fiscal Year 2013, Section 941, Reports to Department of Defense on penetrations of networks and information systems of certain contractors) and 10 U.S.C. 391 (formerly Pub. L. 113–58, National Defense Authorization Act for Fiscal Year 2015, Section 1632, Reporting on Cyber Incidents with Respect to Networks and Information Systems of Operationally Critical Contractors).

Affected Public: Business or other for-profit and not for profit institutions.

Frequency: On occasion.

Respondent's Obligation: Voluntary.

OMB Desk Officer: Ms. Jasmeet Seehra.

You may also submit comments and recommendations, identified by Docket ID number and title, by the following method:

• *Federal eRulemaking Portal: http://www.regulations.gov.* Follow the instructions for submitting comments.

Instructions: All submissions received must include the agency name, Docket ID number, and title for this **Federal Register** document. The general policy for comments and other submissions from members of the public is to make these submissions available for public viewing on the internet at *http://www.regulations.gov* as they are received without change, including any personal identifiers or contact information.

DOD Clearance Officer: Ms. Angela James.

Requests for copies of the information collection proposal should be sent to Ms. James at *whs.mc-alex.esd.mbx.dd-dod-information-collections@mail.mil.*

Dated: September 25, 2019.

Aaron T. Siegel,

Alternate OSD Federal Register Liaison Officer, Department of Defense.

[FR Doc. 2019–21136 Filed 9–27–19; 8:45 am]

BILLING CODE 5001–06–P

DEPARTMENT OF DEFENSE

Office of the Secretary

[Docket ID: DoD–2019–OS–0077]

Submission for OMB Review; Comment Request

AGENCY: Pentagon Force Protection Agency, DoD.

ACTION: 30-Day information collection notice.

SUMMARY: The Department of Defense has submitted to OMB for clearance the following proposal for collection of information under the provisions of the Paperwork Reduction Act.

DATES: Consideration will be given to all comments received by October 30, 2019.

ADDRESSES: Comments and recommendations on the proposed information collection should be emailed to Ms. Jasmeet Seehra, DoD Desk Officer, at *oira_submission@omb.eop.gov.* Please identify the proposed information collection by DoD

Desk Officer, Docket ID number, and title of the information collection.

FOR FURTHER INFORMATION CONTACT: Angela James, 571–372–7574, or *whs.mc-alex.esd.mbx.dd-dod-information-collections@mail.mil.*

SUPPLEMENTARY INFORMATION:

Title; Associated Form; and OMB Number: Law Enforcement Officers Safety Act (LEOSA) Firearms Identification Cards (FICs); PA Form 105; OMB Number 0704–XXXX.

Type of Request: New.

Number of Respondents: 25.

Responses per Respondent: 1.

Annual Responses: 25.

Average Burden per Response: 2 minutes.

Annual Burden Hours: 50 Minutes.

Needs and Uses: The information collection requirement is necessary to obtain information from individuals to validate eligibility of separating or separated PFPA law enforcement officers applying for a LEOSA FIC, to include Defense Protective Service of other predecessor agency law enforcement officers.

Affected Public: Individuals or Households.

Frequency: On occasion.

Respondent's Obligation: Voluntary.

OMB Desk Officer: Ms. Jasmeet Seehra.

You may also submit comments and recommendations, identified by Docket ID number and title, by the following method:

• *Federal eRulemaking Portal: http://www.regulations.gov.* Follow the instructions for submitting comments.

Instructions: All submissions received must include the agency name, Docket ID number, and title for this **Federal Register** document. The general policy for comments and other submissions from members of the public is to make these submissions available for public viewing on the internet at *http://www.regulations.gov* as they are received without change, including any personal identifiers or contact information.

DOD Clearance Officer: Ms. Angela James.

Requests for copies of the information collection proposal should be sent to Ms. James at *whs.mc-alex.esd.mbx.dd-dod-information-collections@mail.mil.*

Dated: September 25, 2019.

Aaron T. Siegel,

Alternate OSD Federal Register Liaison Officer, Department of Defense.

[FR Doc. 2019–21126 Filed 9–27–19; 8:45 am]

BILLING CODE 5001–06–P

DEPARTMENT OF DEFENSE

Office of the Secretary

[Docket ID: DoD–2019–OS–0088]

Submission for OMB Review; Comment Request

AGENCY: Office of the Assistant to the Secretary of Defense for Public Affairs, DoD.

ACTION: 30-Day information collection notice.

SUMMARY: The Department of Defense has submitted to OMB for clearance the following proposal for collection of information under the provisions of the Paperwork Reduction Act.

DATES: Consideration will be given to all comments received by October 30, 2019.

ADDRESSES: Comments and recommendations on the proposed information collection should be emailed to Ms. Jasmeet Seehra, DoD Desk Officer, at *oira_submission@omb.eop.gov.* Please identify the proposed information collection by DoD Desk Officer, Docket ID number, and title of the information collection.

FOR FURTHER INFORMATION CONTACT: Angela James, 571–372–7574, or *whs.mc-alex.esd.mbx.dd-dod-information-collections@mail.mil.*

SUPPLEMENTARY INFORMATION:

Title; Associated Form; and OMB Number: Request for Armed Forces Participation in Public Events (Non-Aviation), DD Form 2536 and Request for Military Aerial Support, DD Form 2535; OMB Control Number 0704–0290.

Type of Request: Extension.

Number of Respondents: 51,000.

Responses per Respondent: 1.

Annual Responses: 51,000.

Average Burden per Response: 21 minutes.

Annual Burden Hours: 17,850.

Needs and Uses: This information collection requirement is necessary to evaluate the eligibility of events to receive Armed Forces community relations support and to determine whether requested military assets are available.

Affected Public: State, local, or tribal governments; Federal agencies or employees; for-profit and non-profit institutions; and individuals or households.

Frequency: On occasion.

Respondent's Obligation: Voluntary.

OMB Desk Officer: Ms. Jasmeet Seehra.

You may also submit comments and recommendations, identified by Docket ID number and title, by the following method:

• *Federal eRulemaking Portal: http://www.regulations.gov.* Follow the instructions for submitting comments.

Instructions: All submissions received must include the agency name, Docket ID number, and title for this **Federal Register** document. The general policy for comments and other submissions from members of the public is to make these submissions available for public viewing on the internet at *http://www.regulations.gov* as they are received without change, including any personal identifiers or contact information.

DOD Clearance Officer: Ms. Angela James.

Requests for copies of the information collection proposal should be sent to Ms. James at *whs.mc-alex.esd.mbx.dd-dod-information-collections@mail.mil.*

Dated: September 25, 2019.

Aaron T. Siegel,

Alternate OSD Federal Register, Liaison Officer, Department of Defense.

[FR Doc. 2019–21134 Filed 9–27–19; 8:45 am]

BILLING CODE 5001–06–P

DEPARTMENT OF DEFENSE

Department of the Navy

[Docket ID: USN–2019–HQ–0012]

Submission for OMB Review; Comment Request

AGENCY: Office of the Secretary of the Navy, DoD.

ACTION: 30-Day information collection notice.

SUMMARY: The Department of Defense has submitted to OMB for clearance the following proposal for collection of information under the provisions of the Paperwork Reduction Act.

DATES: Consideration will be given to all comments received by October 30, 2019.

ADDRESSES: Comments and recommendations on the proposed information collection should be emailed to Ms. Jasmeet Seehra, DoD Desk Officer, at *oira_submission@omb.eop.gov.* Please identify the proposed information collection by DoD Desk Officer, Docket ID number, and title of the information collection.

FOR FURTHER INFORMATION CONTACT: Angela James, 571–372–7574, or *whs.mc-alex.esd.mbx.dd-dod-information-collections@mail.mil.*

SUPPLEMENTARY INFORMATION:

Title; Associated Form; and OMB Number: Response to the Marine Corps NAF Debt Collection Notice NAVMC 11787, OMB Control Number 0703–XXXX.

Type of Request: New.
Number of Respondents: 2,080.
Responses per Respondent: 1.
Annual Responses: 2,080.
Average Burden per Response: 5 minutes.
Annual Burden Hours: 173.
Needs and Uses: The information collection requirement is necessary to maintain a tracking and accounting system for the purpose of repayment management or to transfer the debt collection to the Treasury Offset Program, dependent on the response option elected by the respondent.
Affected Public: Business or other for-profit; individuals or households.
Frequency: On occasion.
Respondent's Obligation: Voluntary.
OMB Desk Officer: Ms. Jasmeet Seehra.

You may also submit comments and recommendations, identified by Docket ID number and title, by the following method:

• *Federal eRulemaking Portal: http://www.regulations.gov.* Follow the instructions for submitting comments.

Instructions: All submissions received must include the agency name, Docket ID number, and title for this **Federal Register** document. The general policy for comments and other submissions from members of the public is to make these submissions available for public viewing on the internet at *http://www.regulations.gov* as they are received without change, including any personal identifiers or contact information.

DOD Clearance Officer: Ms. Angela James.

Requests for copies of the information collection proposal should be sent to Ms. James at *whs.mc-alex.esd.mbx.dd-dod-information-collections@mail.mil.*

Dated: September 25, 2019.

Aaron T. Siegel,

Alternate OSD Federal Register Liaison Officer, Department of Defense.

[FR Doc. 2019–21185 Filed 9–27–19; 8:45 am]

BILLING CODE 5001–06–P

DEPARTMENT OF DEFENSE

Department of the Navy

[Docket ID: USN–2019–HQ–0015]

Submission for OMB Review; Comment Request

AGENCY: The Office of the Secretary of the Navy, DoD.

ACTION: 30-Day information collection notice.

SUMMARY: The Department of Defense has submitted to OMB for clearance the following proposal for collection of information under the provisions of the Paperwork Reduction Act.

DATES: Consideration will be given to all comments received by October 30, 2019.

ADDRESSES: Comments and recommendations on the proposed information collection should be emailed to Ms. Jasmeet Seehra, DoD Desk Officer, at *oira_submission@omb.eop.gov.* Please identify the proposed information collection by DoD Desk Officer, Docket ID number, and title of the information collection.

FOR FURTHER INFORMATION CONTACT: Angela James, 571–372–7574, or *whs.mc-alex.esd.mbx.dd-dod-information-collections@mail.mil.*

SUPPLEMENTARY INFORMATION:

Title; Associated Form; and OMB Number: Application for Commission in the U.S. Navy/U.S. Naval Reserve; NAVCRUIT Form 1131/238, OMB Control Number 0703–0029.
Type of Request: Revision.
Number of Respondents: 14,000.
Responses per Respondent: 1.
Annual Responses: 14,000.
Average Burden per Response: 1 hour.
Annual Burden Hours: 14,000.
Needs and Uses: All persons interested in entering the U.S. Navy or U.S. Navy Reserve, in a commissioned status must provide various personal data in order for a Selection Board to determine their qualifications for naval service and for specific fields of endeavor which the applicant intends to pursue. This information is used to recruit and select applicants who are qualified for commission in the U.S. Navy or U.S. Navy Reserve.
Affected Public: Individuals or households.
Frequency: On occasion.
Respondent's Obligation: Voluntary.
OMB Desk Officer: Ms. Jasmeet Seehra.

You may also submit comments and recommendations, identified by Docket ID number and title, by the following method:

• *Federal eRulemaking Portal: http://www.regulations.gov.* Follow the instructions for submitting comments.

Instructions: All submissions received must include the agency name, Docket ID number, and title for this **Federal Register** document. The general policy for comments and other submissions from members of the public is to make these submissions available for public viewing on the internet at *http://www.regulations.gov* as they are received without change, including any personal identifiers or contact information.

DoD Clearance Officer: Ms. Angela James.

Requests for copies of the information collection proposal should be sent to Ms. James at *whs.mc-alex.esd.mbx.dd-dod-information-collections@mail.mil.*

Dated: September 20, 2019.

Aaron T. Siegel,

Alternate OSD Federal Register Liaison Officer, Department of Defense.

[FR Doc. 2019–20854 Filed 9–27–19; 8:45 am]

BILLING CODE 5001–06–P

DEPARTMENT OF EDUCATION

[Docket No.: ED–2019–ICCD–0122]

Agency Information Collection Activities; Submission to the Office of Management and Budget for Review and Approval; Comment Request; Application for Asian American and Native American Pacific Islander-Serving Institutions Program (1894–0001)

AGENCY: Office of Postsecondary Education (OPE), Department of Education (ED).

ACTION: Notice.

SUMMARY: In accordance with the Paperwork Reduction Act of 1995, ED is proposing a reinstatement of a previously approved information collection.

DATES: Interested persons are invited to submit comments on or before October 30, 2019.

ADDRESSES: To access and review all the documents related to the information collection listed in this notice, please use *http://www.regulations.gov* by searching the Docket ID number ED–2019–ICCD–0122. Comments submitted in response to this notice should be submitted electronically through the Federal eRulemaking Portal at *http://www.regulations.gov* by selecting the Docket ID number or via postal mail, commercial delivery, or hand delivery. If the regulations.gov site is not available to the public for any reason, ED will temporarily accept comments at *ICDocketMgr@ed.gov.* Please include the docket ID number and the title of the information collection request when requesting documents or submitting comments. *Please note that comments submitted by fax or email and those submitted after the comment period will not be accepted.* Written requests for information or comments submitted by postal mail or delivery should be addressed to the Director of the Information Collection Clearance Division, U.S. Department of Education, 550 12th Street SW, PCP, Room 9086, Washington, DC 20202–0023.

FOR FURTHER INFORMATION CONTACT: For specific questions related to collection activities, please contact Pearson Owens, 202–453–7997.

SUPPLEMENTARY INFORMATION: The Department of Education (ED), in accordance with the Paperwork Reduction Act of 1995 (PRA) (44 U.S.C. 3506(c)(2)(A)), provides the general public and Federal agencies with an opportunity to comment on proposed, revised, and continuing collections of information. This helps the Department assess the impact of its information collection requirements and minimize the public's reporting burden. It also helps the public understand the Department's information collection requirements and provide the requested data in the desired format. ED is soliciting comments on the proposed information collection request (ICR) that is described below. The Department of Education is especially interested in public comment addressing the following issues: (1) Is this collection necessary to the proper functions of the Department; (2) will this information be processed and used in a timely manner; (3) is the estimate of burden accurate; (4) how might the Department enhance the quality, utility, and clarity of the information to be collected; and (5) how might the Department minimize the burden of this collection on the respondents, including through the use of information technology. Please note that written comments received in response to this notice will be considered public records.

Title of Collection: Application for Asian American and Native American Pacific Islander-Serving Institutions Program (1894–0001).

OMB Control Number: 1840–0798.

Type of Review: A reinstatement of a previously approved information collection.

Respondents/Affected Public: Private Sector.

Total Estimated Number of Annual Responses: 60.

Total Estimated Number of Annual Burden Hours: 4,500.

Abstract: The program is authorized under Title III, Part A, Section 320 of the Higher Education Opportunity Act (HEOA) of 2008, as amended. The program awards discretionary grants to eligible institutions of higher education so that they might increase self-sufficiency by improving academic programs, institutional management, and fiscal stability.

Dated: September 25, 2019.

Kate Mullan,

PRA Coordinator, Information Collection Clearance Program, Information Management Branch, Office of the Chief Information Officer.

[FR Doc. 2019–21106 Filed 9–27–19; 8:45 am]

BILLING CODE 4000–01–P

DEPARTMENT OF ENERGY

[OE Docket No. EA–479]

Application To Export Electric Energy; Macquarie Energy LLC

AGENCY: Office of Electricity, Department of Energy (DOE).

ACTION: Notice of application.

SUMMARY: Macquarie Energy LLC (Applicant or MEL) has applied for authorization to transmit electric energy from the United States to Canada pursuant to the Federal Power Act.

DATES: Comments, protests, or motions to intervene must be submitted on or before October 30, 2019.

ADDRESSES: Comments, protests, motions to intervene, or requests for more information should be addressed to: Office of Electricity, Mail Code: OE–20, U.S. Department of Energy, 1000 Independence Avenue SW, Washington, DC 20585–0350. Because of delays in handling conventional mail, it is recommended that documents be transmitted by overnight mail, by electronic mail to *Electricity.Exports@hq.doe.gov,* or by facsimile to 202–586–8008.

SUPPLEMENTARY INFORMATION: The Department of Energy (DOE) regulates exports of electricity from the United States to a foreign country, pursuant to sections 301(b) and 402(f) of the Department of Energy Organization Act (42 U.S.C. 7151(b) and 7172(f)). Such exports require authorization under section 202(e) of the Federal Power Act (16 U.S.C. 824a(e)).

On September 19, 2019, DOE received an application from MEL for authorization to transmit electric energy from the United States to Canada as a power marketer for a five-year term using existing international transmission facilities.

In its application, the Applicant states that it ''does not own, operate, or control any electric generation, transmission, or distribution facilities, and does not hold a franchise or service territory or native load obligation.'' The electric energy that the Applicant proposes to export to Canada ''would be surplus to the needs of those entities selling power to MEL.'' The existing international transmission facilities to be utilized by the Applicant have previously been authorized by Presidential permits issued pursuant to Executive Order 10485, as amended, and are appropriate for open access transmission by third parties.

Procedual Matters: Any person desiring to be heard in this proceeding should file a comment or protest to the application at the address provided above. Protests should be filed in accordance with Rule 211 of the Federal Energy Regulatory Commission's (FERC) Rules of Practice and Procedure (18 CFR 385.211). Any person desiring to become a party to this proceeding should file a motion to intervene at the above address in accordance with FERC Rule 214 (18 CFR 385.214). Five (5) copies of such comments, protests, or motions to intervene should be sent to the address provided above on or before the date listed above.

Comments and other filings concerning MEL's application to export electric energy to Canada should be clearly marked with OE Docket No. EA–479. An additional copy is to be provided directly to Patricia Donnelly, Macquarie Energy LLC, One Allen Center, 500 Dallas Street, Suite 3100, Houston, TX 77002.

A final decision will be made on this application after the environmental impacts have been evaluated pursuant to DOE's National Environmental Policy Act Implementing Procedures (10 CFR part 1021) and after DOE determines that the proposed action will not have an adverse impact on the sufficiency of supply or reliability of the U.S. electric power supply system.

Copies of this application will be made available, upon request, for public inspection and copying at the address provided above, by accessing the program website at *http://energy.gov/node/11845,* or by emailing Angela Troy at *Angela.Troy@hq.doe.gov.*

Signed in Washington, DC, on September 23, 2019.

Christopher Lawrence,

Management and Program Analyst, Transmission Permitting and Technical Assistance, Office of Electricity.

[FR Doc. 2019–21014 Filed 9–27–19; 8:45 am]

BILLING CODE 6450–01–P

DEPARTMENT OF ENERGY

Federal Energy Regulatory Commission

Combined Notice of Filings

Take notice that the Commission has received the following Natural Gas Pipeline Rate and Refund Report filings:

Filings Instituting Proceedings

Docket Numbers: RP19–1580–000.
Applicants: Greylock Pipeline, LLC.
Description: Compliance filing Notice of Rates 2019 Oct to be effective 10/1/2019.
Filed Date: 9/20/19.
Accession Number: 20190920–5026.
Comments Due: 5 p.m. ET 10/2/19.

Docket Numbers: RP19–1581–000.
Applicants: New England NG Supply, Limited, Boston Gas Company.
Description: Joint Petition for Temporary Waiver of Commission Policies, Capacity Release Regulations and Policies, et al. of New England NG Supply, Limited, et al. under RP19–1581.
Filed Date: 9/20/19.
Accession Number: 20190920–5145.
Comments Due: 5 p.m. ET 10/2/19.

Docket Numbers: RP19–1582–000.
Applicants: Gulf South Pipeline Company, LP.
Description: § 4(d) Rate Filing: Amendment to NC Neg Rate Agmt (BP 46441–2) to be effective 9/16/2019.
Filed Date: 9/23/19.
Accession Number: 20190923–5054.
Comments Due: 5 p.m. ET 10/7/19.

Docket Numbers: RP19–1583–000.
Applicants: ANR Pipeline Company.
Description: § 4(d) Rate Filing: ANR Centra Negotiated Rate Agreement Filing to be effective 11/1/2019.
Filed Date: 9/23/19.
Accession Number: 20190923–5116.
Comments Due: 5 p.m. ET 10/7/19.

Docket Numbers: RP19–1584–000.
Applicants: ANR Pipeline Company.
Description: § 4(d) Rate Filing: ANR Centra Non-Conforming Amendment to be effective 4/1/2020.
Filed Date: 9/23/19.
Accession Number: 20190923–5121.
Comments Due: 5 p.m. ET 10/7/19.

Docket Numbers: RP19–1585–000.
Applicants: Texas Eastern Transmission, LP.
Description: Compliance filing Lambertville East (CP18–26) In-Service Compliance Filing to be effective 11/1/2019.
Filed Date: 9/23/19.
Accession Number: 20190923–5148.
Comments Due: 5 p.m. ET 10/7/19.

Docket Numbers: RP19–1586–000.
Applicants: El Paso Natural Gas Company, L.L.C.
Description: § 4(d) Rate Filing: Negotiated Rate Agreements Filing (XTO Energy) to be effective 9/24/2019.
Filed Date: 9/23/19.
Accession Number: 20190923–5154.
Comments Due: 5 p.m. ET 10/7/19.

The filings are accessible in the Commission's eLibrary system by clicking on the links or querying the docket number.

Any person desiring to intervene or protest in any of the above proceedings must file in accordance with Rules 211 and 214 of the Commission's Regulations (18 CFR 385.211 and 385.214) on or before 5:00 p.m. Eastern time on the specified comment date. Protests may be considered, but intervention is necessary to become a party to the proceeding.

eFiling is encouraged. More detailed information relating to filing requirements, interventions, protests, service, and qualifying facilities filings can be found at: *http://www.ferc.gov/docs-filing/efiling/filing-req.pdf.* For other information, call (866) 208–3676 (toll free). For TTY, call (202) 502–8659.

Dated: September 24, 2019.

Nathaniel J. Davis Sr.,

Deputy Secretary.

[FR Doc. 2019–21139 Filed 9–27–19; 8:45 am]

BILLING CODE 6717–01–P

DEPARTMENT OF ENERGY

Federal Energy Regulatory Commission

Combined Notice of Filings #1

Take notice that the Commission received the following electric corporate filings:

Docket Numbers: EC19–139–000.
Applicants: Bethel Wind Energy LLC, Elk Wind Energy LLC.
Description: Joint Application for Authorization Under Section 203 of the Federal Power Act of Elk Wind Energy LLC, et al.
Filed Date: 9/19/19.
Accession Number: 20190919–5125.
Comments Due: 5 p.m. ET 10/10/19.

Take notice that the Commission received the following electric rate filings:

Docket Numbers: ER10–2138–023; ER10–2139–023.
Applicants: Grand Ridge Energy II LLC, Grand Ridge Energy III LLC.
Description: Notice of Change in Facts Under Market-Based Rate Authority of Grand Ridge Energy II LLC, et al.
Filed Date: 9/19/19.
Accession Number: 20190919–5121.
Comments Due: 5 p.m. ET 10/10/19.

Docket Numbers: ER19–1680–002.
Applicants: Southwest Power Pool, Inc.
Description: Tariff Amendment: 2236R11 GSEC NITSA/NOA—Extension of Time for FERC Action to be effective 4/1/2019.
Filed Date: 9/20/19.
Accession Number: 20190920–5114.
Comments Due: 5 p.m. ET 10/11/19.

Docket Numbers: ER19–2434–000.
Applicants: Citizens Imperial Solar LLC.
Description: Supplement to July 22, 2019 Citizens Imperial Solar LLC tariff filing.
Filed Date: 9/19/19.
Accession Number: 20190919–5122.
Comments Due: 5 p.m. ET 10/10/19.

Docket Numbers: ER19–2534–000.
Applicants: Citizens Energy Corporation.
Description: Supplement to August 5, 2019 Citizens Energy Corporation tariff filing.
Filed Date: 9/19/19.
Accession Number: 20190919–5123.
Comments Due: 5 p.m. ET 10/10/19.

Docket Numbers: ER19–2833–000.
Applicants: Power Supply Partners, LLC.
Description: Baseline eTariff Filing: Market-Based Rate Tariff Application to be effective 9/20/2019.
Filed Date: 9/19/19.
Accession Number: 20190919–5112.
Comments Due: 5 p.m. ET 10/10/19.

Docket Numbers: ER19–2834–000.
Applicants: Southern California Edison Company.
Description: § 205(d) Rate Filing: Amendments to SGIA and LGIA, Tehachapi Wind Wall, LLC, SA 185/186 to be effective 9/23/2019.
Filed Date: 9/20/19.
Accession Number: 20190920–5000.
Comments Due: 5 p.m. ET 10/11/19.

Docket Numbers: ER19–2835–000.
Applicants: Midcontinent Independent System Operator, Inc.
Description: § 205(d) Rate Filing: 2019–09–20_Attachment X True-up to Remove Rejected Site Control Language to be effective 4/24/2019.
Filed Date: 9/20/19.
Accession Number: 20190920–5050.
Comments Due: 5 p.m. ET 10/11/19.

Docket Numbers: ER19–2836–000.
Applicants: Alabama Power Company.
Description: § 205(d) Rate Filing: Camp Lawton Solar LGIA Filing to be effective 9/6/2019.
Filed Date: 9/20/19.
Accession Number: 20190920–5054.

Comments Due: 5 p.m. ET 10/11/19.

Docket Numbers: ER19–2837–000.

Applicants: Alabama Power Company.

Description: § 205(d) Rate Filing: Peach Blossom Energy III LGIA Filing to be effective 9/9/2019.

Filed Date: 9/20/19.

Accession Number: 20190920–5055.

Comments Due: 5 p.m. ET 10/11/19.

Docket Numbers: ER19–2838–000.

Applicants: PJM Interconnection, L.L.C.

Description: § 205(d) Rate Filing: Second Revised ISA No. 3840; Queue No. AD2–167 to be effective 8/21/2019.

Filed Date: 9/20/19.

Accession Number: 20190920–5056.

Comments Due: 5 p.m. ET 10/11/19.

Docket Numbers: ER19–2839–000.

Applicants: PJM Interconnection, L.L.C.

Description: § 205(d) Rate Filing: Orginal WMPA SA No. 5487; Queue No. AB2–122 to be effective 8/23/2019.

Filed Date: 9/20/19.

Accession Number: 20190920–5075.

Comments Due: 5 p.m. ET 10/11/19.

Docket Numbers: ER19–2840–000.

Applicants: Pacific Gas and Electric Company.

Description: § 205(d) Rate Filing: 2019 Amendment to PWRPA SAs, revising rates based on 2018 demand (SA 30) to be effective 10/1/2019.

Filed Date: 9/20/19.

Accession Number: 20190920–5091.

Comments Due: 5 p.m. ET 10/11/19.

Docket Numbers: ER19–2841–000.

Applicants: Arizona Public Service Company.

Description: § 205(d) Rate Filing: Rate Schedule No. 217, Exhibit B to be effective 11/20/2019.

Filed Date: 9/20/19.

Accession Number: 20190920–5101.

Comments Due: 5 p.m. ET 10/11/19.

Docket Numbers: ER19–2842–000.

Applicants: Southern California Edison Company.

Description: § 205(d) Rate Filing: Amended and Restated Victorville-Lugo Interconnection Agreement, RS FERC No. 51 to be effective 11/20/2019.

Filed Date: 9/20/19.

Accession Number: 20190920–5102.

Comments Due: 5 p.m. ET 10/11/19.

Docket Numbers: ER19–2843–000.

Applicants: Pacific Gas and Electric Company.

Description: Tariff Cancellation: Notice of Termination of Elkhorn Energy Storage E&P Agreement to be effective 11/19/2019.

Filed Date: 9/20/19.

Accession Number: 20190920–5112.

Comments Due: 5 p.m. ET 10/11/19.

Docket Numbers: ER19–2844–000.

Applicants: Pacific Gas and Electric Company.

Description: § 205(d) Rate Filing: PG&E Elkhorn Energy Storage LGIA (SA 379) to be effective 11/19/2019.

Filed Date: 9/20/19.

Accession Number: 20190920–5113.

Comments Due: 5 p.m. ET 10/11/19.

Docket Numbers: ER19–2845–000.

Applicants: Southwest Power Pool, Inc.

Description: § 205(d) Rate Filing: Revisions to Require Phasor Measurement Units at New Generator Interconnections to be effective 11/20/2019.

Filed Date: 9/20/19.

Accession Number: 20190920–5115.

Comments Due: 5 p.m. ET 10/11/19.

Docket Numbers: ER19–2846–000.

Applicants: Trans Bay Cable LLC.

Description: § 205(d) Rate Filing: Revisions to Appendix I of the Trans Bay TO Tariff to be effective 11/23/2019.

Filed Date: 9/20/19.

Accession Number: 20190920–5131.

Comments Due: 5 p.m. ET 10/11/19.

The filings are accessible in the Commission's eLibrary system by clicking on the links or querying the docket number.

Any person desiring to intervene or protest in any of the above proceedings must file in accordance with Rules 211 and 214 of the Commission's Regulations (18 CFR 385.211 and 385.214) on or before 5:00 p.m. Eastern time on the specified comment date. Protests may be considered, but intervention is necessary to become a party to the proceeding.

eFiling is encouraged. More detailed information relating to filing requirements, interventions, protests, service, and qualifying facilities filings can be found at: *http://www.ferc.gov/docs-filing/efiling/filing-req.pdf.* For other information, call (866) 208–3676 (toll free). For TTY, call (202) 502–8659.

Dated: September 20, 2019.

Nathaniel J. Davis, Sr.,

Deputy Secretary.

[FR Doc. 2019–21044 Filed 9–27–19; 8:45 am]

BILLING CODE 6717–01–P

DEPARTMENT OF ENERGY

Federal Energy Regulatory Commission

[Project No. 14993–000]

Notice of Preliminary Permit Application Accepted for Filing and Soliciting Comments, Motions To Intervene, and Competing Applications; Premium Energy Holdings, LLC

On May 9, 2019, Premium Energy Holdings, LLC, filed an application for a preliminary permit, pursuant to section 4(f) of the Federal Power Act (FPA), proposing to study the feasibility of the Intermountain Pumped Storage Project (Intermountain Project or project) to be located on the Sevier River and Fool Creek, near the city of Delta, Millard County, Utah. The sole purpose of a preliminary permit, if issued, is to grant the permit holder priority to file a license application during the permit term. A preliminary permit does not authorize the permit holder to perform any land-disturbing activities or otherwise enter upon lands or waters owned by others without the owners' express permission.

The proposed project would be a closed-loop pumped storage hydropower facility. The applicant proposes three alternative upper reservoirs: Dry Fork Reservoir, Mill Canyon Reservoir, or Williams Reservoir. The proposed DMAD 2 Reservoir would be the lower reservoir for each alternative.

Upper Reservoir Alternative 1: Dry Fork Reservoir

The Dry Fork Reservoir alternative consists of: (1) A 277-acre upper reservoir having a total storage capacity of 39,612 acre-feet at a normal maximum operating elevation of 6,200 feet mean sea level (msl); (2) a 370-foot-high, 2,637-foot-long roller compacted concrete upper reservoir dam; (3) a 1.2-mile-long, 38-foot-diameter concrete-lined headrace tunnel; (4) a 0.16-mile-long, 34-foot-diameter concrete-lined vertical shaft; (5) a 7.05-mile-long, 34-foot-diameter concrete-lined horizontal tunnel; (6) five 0.10-mile-long, 22-foot-diameter steel penstocks; (7) a 500-foot-long, 125-foot-wide, 150-foot-high concrete-lined powerhouse located in an underground cavern, housing five pump-turbine generator-motor units rated for 400 megawatts (MW) each; and (8) a 1.2-mile-long, 40-foot-diameter concrete-lined tailrace tunnel discharging into the proposed DMAD 2 Reservoir.

Upper Reservoir Alternative 2: Mill Canyon Reservoir

The Mill Canyon Reservoir alternative consists of: (1) A 210-acre upper reservoir having a total storage capacity of 30,344 acre-feet at a normal maximum operating elevation of 6,600 feet msl; (2) a 385-foot-high, 2,223-foot-long roller compacted concrete upper reservoir dam; (3) a 1.15-mile-long, 34-foot-diameter concrete-lined headrace tunnel; (4) a 0.28-mile-long, 30-foot-diameter concrete-lined vertical shaft; (5) a 7.6-mile-long, 30-foot-diameter concrete-lined horizontal tunnel; (6) five 0.15-mile-long, 19-foot-diameter steel penstocks; (7) a 500-foot-long, 125-foot-wide, 150-foot-high concrete-lined powerhouse located in an underground cavern, housing five pump-turbine generator-motor units rated for 400 MW each; and (8) a 1.7-mile-long, 36-foot-diameter concrete-lined tailrace tunnel discharging into the proposed DMAD 2 Reservoir.

Upper Reservoir Alternative 3: Williams Reservoir

The Williams Reservoir alternative consists of: (1) A 180-acre upper reservoir having a total storage capacity of 28,063 acre-feet at a normal maximum operating elevation of 7,140 feet msl; (2) a 475-foot-high, 1,850-foot-long roller compacted concrete upper reservoir dam; (3) a 1.1-mile-long, 30-foot-diameter concrete-lined headrace tunnel; (4) a 0.4-mile-long, 27-foot-diameter concrete-lined vertical shaft; (5) a 10.05-mile-long, 27-foot-diameter concrete-lined horizontal tunnel; (6) five 0.10-mile-long, 17-foot-diameter steel penstocks; (7) a 500-foot-long, 125-foot-wide, 150-foot-high concrete-lined powerhouse located in an underground cavern, housing five pump-turbine generator-motor units rated for 400 mW each; and (8) a 2.3-mile-long, 32-foot-diameter concrete-lined tailrace tunnel discharging into the proposed DMAD 2 Reservoir.

Lower Reservoir: DMAD 2 Reservoir

The proposed DMAD 2 Reservoir would consist of: (1) A 3,186-acre lower reservoir having a total storage capacity 48,915 acre-feet at a normal maximum operating elevation of 4,700 feet msl; and (2) a 45-foot-high, 2,142-foot-long roller compacted concrete lower reservoir dam.

Interconnection

For each upper reservoir alternative, project power would be transmitted to the grid via: (1) Two new, approximately 11-mile-long, 345 kilovolt (kV) transmission lines extending from the powerhouse to the existing Intermountain AC switchyard owned by Intermountain Power (the point of interconnection); and (2) appurtenant facilities. The estimated annual generation of the Intermountain Project under each of the alternatives would be 6,900 gigawatt-hours.

Applicant Contact: Victor M. Rojas, Managing Director, Premium Energy Holdings, LLC, 355 South Lemon Avenue, Suite A, Walnut, California 91789; phone: (909) 595–5314.

FERC Contact: Kyle Olcott; phone: (202) 502–8963.

Deadline for filing comments, motions to intervene, competing applications (without notices of intent), or notices of intent to file competing applications: 60 days from the issuance of this notice. Competing applications and notices of intent must meet the requirements of 18 CFR 4.36.

The Commission strongly encourages electronic filing. Please file comments, motions to intervene, notices of intent, and competing applications using the Commission's eFiling system at *http://www.ferc.gov/docs-filing/efiling.asp.* Commenters can submit brief comments up to 6,000 characters, without prior registration, using the eComment system at *http://www.ferc.gov/docs-filing/ecomment.asp.* You must include your name and contact information at the end of your comments. For assistance, please contact FERC Online Support at *FERCOnlineSupport@ferc.gov,* (866) 208–3676 (toll free), or (202) 502–8659 (TTY). In lieu of electronic filing, please send a paper copy to: Secretary, Federal Energy Regulatory Commission, 888 First Street NE, Washington, DC 20426. The first page of any filing should include docket number P–14993–000.

More information about this project, including a copy of the application, can be viewed or printed on the ''eLibrary'' link of Commission's website at *http://www.ferc.gov/docs-filing/elibrary.asp.* Enter the docket number (P–14993) in the docket number field to access the document. For assistance, contact FERC Online Support.

Dated: September 24, 2019.

Nathaniel J. Davis, Sr.,

Deputy Secretary.

[FR Doc. 2019–21142 Filed 9–27–19; 8:45 am]

BILLING CODE 6717–01–P

DEPARTMENT OF ENERGY

Federal Energy Regulatory Commission

[Docket No. CP19–484–000; Docket No. CP19–488–000]

Notice of Schedule for Environmental Review of the Kinder Morgan Louisiana Pipeline LLC Acadiana Project and Columbia Gulf Transmission, LLC Louisiana Xpress Project

On June 28, 2019, Kinder Morgan Louisiana Pipeline LLC (KMLP) filed an application in Docket No. CP19–484–000 requesting a Certificate of Public Convenience and Necessity pursuant to Section 7(c) of the Natural Gas Act to construct and operate certain natural gas pipeline facilities in Louisiana. The proposed project is known as the Acadiana Project, and would increase the north-south natural gas delivery capacity on its pipeline system by approximately 894 million cubic feet per day. According to KMLP, its project would meet the needs of Sabine Pass Liquefaction, LLC at its liquefied natural gas export terminal in Cameron Parish, Louisiana.

On July 16, 2019, Columbia Gulf Transmission, LLC (Columbia Gulf) filed an application in Docket No. CP19–488–000 requesting a Certificate of Public Convenience and Necessity pursuant to Section 7(c) of the Natural Gas Act to construct and operate certain natural gas pipeline facilities in Louisiana. The proposed project is known as the Louisiana Xpress Project, and would provide open access firm transportation of about 850 million cubic feet of natural gas per day from a primary receipt point at Columbia Gulf's Mainline Pool to a primary delivery point at an interconnection with KMLP in Evangeline Parish, Louisiana.

On July 12, 2019, the Federal Energy Regulatory Commission (Commission or FERC) issued its Notice of Application (NOA) for the Acadiana Project, and on July 26, 2019, FERC issued its NOA for the Louisiana Xpress Project. Among other things, the notices alerted agencies issuing federal authorizations of the requirement to complete all necessary reviews and reach a final decision on a request for a federal authorization within 90 days of the date of issuance of the Commission staff's Environmental Assessment (EA) for the projects. This instant notice identifies the FERC staff's planned schedule for the completion of the combined EA for both projects.

Schedule for Environmental Review

Issuance of EA—February 8, 2020

90-day Federal Authorization Decision Deadline—May 9, 2020

If a schedule change becomes necessary, additional notice will be provided so that the relevant agencies are kept informed of the projects' progress.

Project Descriptions

Acadiana Project

KMLP proposes to install three new natural gas-fired compressor units (31,900 horsepower [hp] each) and re-wheel two existing compressor units at its existing Compressor Station 760 in Acadia Parish, make modifications to meter piping and new control valves at its existing Columbia Gulf Meter Station in Evangeline Parish, as well as install auxiliary facilities at both locations.

Louisiana Xpress Project

Columbia Gulf proposes to construct and operate three new greenfield compressor stations, and modify one existing compressor station. Each new compressor station (Shelburn Compressor Station in East Carroll Parish, Red Mountain Compressor Station in Catahoula Parish, and Chicot Compressor Station in Evangeline Parish) would include two 23,470 hp natural gas turbine driven compressors (totaling 46,940 hp), filter/separators, gas cooling bays, 48-inch-diameter suction and 42-inch-diameter discharge piping, and related appurtenant facilities.

Modifications to the existing Alexandria Compressor Station in Rapides Parish would include additional cooling bays with associated piping and appurtenant facilities.

Background

On August 28, 2019, the Commission issued a *Notice of Intent to Prepare an Environmental Assessment for the Proposed Acadiana Project and Request for Comments on Environmental Issues* (NOI). Also on August 28, 2019, the Commission issued a *Notice of Intent to Prepare an Environmental Assessment for the Proposed Louisiana Xpress Project, Request for Comments on Environmental Issues, and Notice of Public Scoping Session.* The NOIs were sent to affected landowners; federal, state, and local government agencies; elected officials; environmental and public interest groups; Native American tribes; other interested parties; and local libraries and newspapers.

In response to the NOI for the Acadiana Project, the Commission received comments from the Louisiana Department of Wildlife and Fisheries and Cheniere Energy. The primary issues raised by the commentors are potential impacts on the wild coco orchid. The comment from Cheniere Energy was a statement in support of the Acadiana Project. In response to the NOI for the Louisiana Xpress Project, the Commission received comments from SKL Farm Inc., and the Choctaw Nation of Oklahoma. The primary issues raised by the commentors are adverse effects of artificial light, noise, and increased activity from the proposed compressor stations. The Choctaw Nation of Oklahoma requested GIS shapefiles, and the cultural resource surveys for the Louisiana Xpress Project. All substantive comments will be addressed in the EA.

Additional Information

In order to receive notification of the issuance of the EA and to keep track of all formal issuances and submittals in specific dockets, the Commission offers a free service called eSubscription. This can reduce the amount of time you spend researching proceedings by automatically providing you with notification of these filings, document summaries, and direct links to the documents. Go to *www.ferc.gov/docs-filing/esubscription.asp.*

Additional information about the Project is available from the Commission's Office of External Affairs at (866) 208–FERC or on the FERC website (*www.ferc.gov*). Using the ''eLibrary'' link, select ''General Search'' from the eLibrary menu, enter the selected date range and ''Docket Number'' excluding the last three digits (*i.e.,* CP19–484 or CP19–488), and follow the instructions. For assistance with access to eLibrary, the helpline can be reached at (866) 208–3676, TTY (202) 502–8659, or at *FERCOnlineSupport@ferc.gov.* The eLibrary link on the FERC website also provides access to the texts of formal documents issued by the Commission, such as orders, notices, and rule makings.

Dated: September 24, 2019.

Nathaniel J. Davis, Sr.,

Deputy Secretary.

[FR Doc. 2019–21140 Filed 9–27–19; 8:45 am]

BILLING CODE 6717–01–P

DEPARTMENT OF ENERGY

Federal Energy Regulatory Commission

[Docket No. ER19–2833–000]

Power Supply Partners, LLC; Supplemental Notice That Initial Market-Based Rate Filing Includes Request for Blanket Section 204 Authorization

This is a supplemental notice in the above-referenced proceeding of Power Supply Partners, LLC's application for market-based rate authority, with an accompanying rate tariff, noting that such application includes a request for blanket authorization, under 18 CFR part 34, of future issuances of securities and assumptions of liability.

Any person desiring to intervene or to protest should file with the Federal Energy Regulatory Commission, 888 First Street NE, Washington, DC 20426, in accordance with Rules 211 and 214 of the Commission's Rules of Practice and Procedure (18 CFR 385.211 and 385.214). Anyone filing a motion to intervene or protest must serve a copy of that document on the Applicant.

Notice is hereby given that the deadline for filing protests with regard to the applicant's request for blanket authorization, under 18 CFR part 34, of future issuances of securities and assumptions of liability, is October 10, 2019.

The Commission encourages electronic submission of protests and interventions in lieu of paper, using the FERC Online links at *http://www.ferc.gov*. To facilitate electronic service, persons with internet access who will eFile a document and/or be listed as a contact for an intervenor must create and validate an eRegistration account using the eRegistration link. Select the eFiling link to log on and submit the intervention or protests.

Persons unable to file electronically should submit an original and 5 copies of the intervention or protest to the Federal Energy Regulatory Commission, 888 First Street NE, Washington, DC 20426.

The filings in the above-referenced proceeding are accessible in the Commission's eLibrary system by clicking on the appropriate link in the above list. They are also available for electronic review in the Commission's Public Reference Room in Washington, DC. There is an eSubscription link on the website that enables subscribers to receive email notification when a document is added to a subscribed docket(s). For assistance with any FERC

Online service, please email *FERCOnlineSupport@ferc.gov.* or call (866) 208–3676 (toll free). For TTY, call (202) 502–8659.

Dated: September 20, 2019.

Nathaniel J. Davis, Sr.,

Deputy Secretary.

[FR Doc. 2019–21048 Filed 9–27–19; 8:45 am]

BILLING CODE 6717–01–P

DEPARTMENT OF ENERGY

Federal Energy Regulatory Commission

[Docket Nos. EL19–98–000; EL19–99–000]

Notice of Institution of Section 206 Proceeding and Refund Effective Date; York Haven Power Co., LLC, Lake Lynn Generation, LLC

On September 20, 2019, the Commission issued an order in Docket Nos. EL19–98–000 and EL19–99–000, pursuant to section 206 of the Federal Power Act (FPA), 16 U.S.C. 824e (2018), instituting an investigation into whether York Haven Power Co., LLC and Lake Lynn Generation, LLC's Reactive Service rate schedules remains just and reasonable. *York Haven Power Co., LLC, et al.,* 168 FERC ¶ 61,187 (2019).

The refund effective date in Docket Nos. EL19–98–000 and EL19–99–000, established pursuant to section 206(b) of the FPA, will be the date of publication of this notice in the **Federal Register**.

Any interested person desiring to be heard in Docket Nos. EL19–98–000 and EL19–99–000 must file a notice of intervention or motion to intervene, as appropriate, with the Federal Energy Regulatory Commission, 888 First Street NE, Washington, DC 20426, in accordance with Rule 214 of the Commission's Rules of Practice and Procedure, 18 CFR 385.214 (2019), within 21 days of the date of issuance of the order.

Dated: September 20, 2019.

Nathaniel J. Davis, Sr.,

Deputy Secretary.

[FR Doc. 2019–21046 Filed 9–27–19; 8:45 am]

BILLING CODE 6717–01–P

DEPARTMENT OF ENERGY

Federal Energy Regulatory Commission

Combined Notice of Filings #1

Take notice that the Commission received the following electric corporate filings:

Docket Numbers: EC19–120–000.

Applicants: El Paso Electric Company, Sun Jupiter Holdings LLC.

Description: Supplement to August 13, 2019 Joint Application for Authorization Under Section 203 of the Federal Power Act of El Paso Electric Company, et al.

Filed Date: 9/23/19.

Accession Number: 20190923–5084.

Comments Due: 5 p.m. ET 10/15/19.

Take notice that the Commission received the following exempt wholesale generator filings:

Docket Numbers: EG19–187–000.

Applicants: Bronco Plains Wind, LLC.

Description: Notice of Self-Certification of Exempt Wholesale Generator Status of Bronco Plains Wind, LLC.

Filed Date: 9/20/19.

Accession Number: 20190920–5183.

Comments Due: 5 p.m. ET 10/11/19.

Docket Numbers: EG19–188–000.

Applicants: Poseidon Wind, LLC.

Description: Notice of Self-Certification of Exempt Wholesale Generator Status of Poseidon Wind, LLC.

Filed Date: 9/23/19.

Accession Number: 20190923–5183.

Comments Due: 5 p.m. ET 10/15/19.

Take notice that the Commission received the following electric rate filings:

Docket Numbers: ER12–1470–009; ER18–836–002; ER10–1290–009; ER16–1833–005; ER10–3026–008.

Applicants: San Diego Gas & Electric Company, Energia Sierra Juarez U.S., LLC, Energia Sierra Juarez 2 U.S., LLC, Sempra Gas & Power Marketing, LLC, Termoelectria U.S., LLC.

Description: Second Supplement to December 28, 2018 Updated Market Power Analysis for the Southwest Region of Energia Sierra Juarez U.S., LLC, et al.

Filed Date: 9/23/19.

Accession Number: 20190923–5161.

Comments Due: 5 p.m. ET 10/15/19.

Docket Numbers: ER18–1442–002.

Applicants: Citizens Sycamore-Penasquitos Transmission LLC.

Description: Compliance filing: Compliance Filing in Docket No. ER18–1442–000 to be effective 12/31/9998.

Filed Date: 9/23/19.

Accession Number: 20190923–5151.

Comments Due: 5 p.m. ET 10/15/19.

Docket Numbers: ER18–1822–001.

Applicants: California Independent System Operator Corporation.

Description: Compliance filing: 2019–09–24 Compliance Filing to add Citizens Sycamore-Penasquitos to TCA to be effective 9/23/2019.

Filed Date: 9/24/19.

Accession Number: 20190924–5053.

Comments Due: 5 p.m. ET 10/15/19.

Docket Numbers: ER19–2439–000.

Applicants: Tampa Electric Company.

Description: Supplement to July 23, 2019 Petition for Waiver of Affiliate Transaction Pricing Rule of Tampa Electric Company.

Filed Date: 9/18/19.

Accession Number: 20190918–5002.

Comments Due: 5 p.m. ET 9/30/19.

Docket Numbers: ER19–2852–000.

Applicants: Connecticut Yankee Atomic Power Company.

Description: § 205(d) Rate Filing: Connecticut Yankee Rate Schedule Revision Filing to be effective 12/1/2019.

Filed Date: 9/23/19.

Accession Number: 20190923–5139.

Comments Due: 5 p.m. ET 10/15/19.

Docket Numbers: ER19–2853–000.

Applicants: PJM Interconnection, L.L.C.

Description: § 205(d) Rate Filing: Orginal WMPA SA No. 5489; Queue No. AB2–168 to be effective 8/26/2019.

Filed Date: 9/23/19.

Accession Number: 20190923–5142.

Comments Due: 5 p.m. ET 10/15/19.

Docket Numbers: ER19–2854–000.

Applicants: Maine Yankee Atomic Power Company.

Description: § 205(d) Rate Filing: Maine Yankee Rate Schedule Revision Filing to be effective 12/1/2019.

Filed Date: 9/23/19.

Accession Number: 20190923–5143.

Comments Due: 5 p.m. ET 10/15/19.

Docket Numbers: ER19–2855–000.

Applicants: Yankee Atomic Electric Company.

Description: § 205(d) Rate Filing: Yankee Atomic Rate Schedule Revision Filing to be effective 12/1/2019.

Filed Date: 9/23/19.

Accession Number: 20190923–5144.

Comments Due: 5 p.m. ET 10/15/19.

Docket Numbers: ER19–2856–000.

Applicants: Birchwood Power Partners, L.P.

Description: § 205(d) Rate Filing: Reactive Power Rate Schedule to be effective 9/24/2019.

Filed Date: 9/23/19.

Accession Number: 20190923–5149.

Comments Due: 5 p.m. ET 10/15/19.

Docket Numbers: ER19–2857–000.

Applicants: Southwestern Electric Power Company.

Description: § 205(d) Rate Filing: SA777 NTEC Brandy Branch Tap to Darco DPA Amend and Restated to be effective 9/15/2019.

Filed Date: 9/23/19.

Accession Number: 20190923–5152.

Comments Due: 5 p.m. ET 10/15/19.

Docket Numbers: ER19–2858–000.
Applicants: East Coast Power Linden Holding, L.L.C.
Description: Baseline eTariff Filing: Baseline new Reactive Rate Schedule to be effective 10/1/2019.
Filed Date: 9/24/19.
Accession Number: 20190924–5054.
Comments Due: 5 p.m. ET 10/15/19.

The filings are accessible in the Commission's eLibrary system by clicking on the links or querying the docket number.

Any person desiring to intervene or protest in any of the above proceedings must file in accordance with Rules 211 and 214 of the Commission's Regulations (18 CFR 385.211 and 385.214) on or before 5:00 p.m. Eastern time on the specified comment date. Protests may be considered, but intervention is necessary to become a party to the proceeding.

eFiling is encouraged. More detailed information relating to filing requirements, interventions, protests, service, and qualifying facilities filings can be found at: *http://www.ferc.gov/docs-filing/efiling/filing-req.pdf.* For other information, call (866) 208–3676 (toll free). For TTY, call (202) 502–8659.

Dated: September 24, 2019.

Nathaniel J. Davis, Sr.,

Deputy Secretary.

[FR Doc. 2019–21135 Filed 9–27–19; 8:45 am]

BILLING CODE 6717–01–P

DEPARTMENT OF ENERGY

Federal Energy Regulatory Commission

Combined Notice of Filings #1

Take notice that the Commission received the following electric corporate filings:

Docket Numbers: EC13–114–002.
Applicants: Axium Coachella, Coachella Partners.
Description: Notice of Change in Facts of Axium Coachella and Coachella Partners.
Filed Date: 9/23/19.
Accession Number: 20190923–5095.
Comments Due: 5 p.m. ET 10/15/19.

Docket Numbers: EC19–140–000.
Applicants: Tesoro Refining & Marketing Company LLC, Watson Cogeneration Company.
Description: Application for Authorization Under Section 203 of the Federal Power Act, et al. of Tesoro Refining & Marketing Company LLC, et al.
Filed Date: 9/20/19.
Accession Number: 20190920–5164.
Comments Due: 5 p.m. ET 10/11/19.

Take notice that the Commission received the following exempt wholesale generator filings:

Docket Numbers: ER10–2249–008.
Applicants: Portland General Electric Company.
Description: Supplement to June 28, 2019 Updated Market Power Analysis in the Northwest Region for Portland General Electric Company.
Filed Date: 9/19/19.
Accession Number: 20190919–5140.
Comments Due: 5 p.m. ET 10/10/19.

Docket Numbers: ER19–2847–000.
Applicants: Oxbow Creek Energy LLC.
Description: Baseline eTariff Filing: Owbow Energy Reactive Power Tariff Filing to be effective 12/1/2019.
Filed Date: 9/23/19.
Accession Number: 20190923–5033.
Comments Due: 5 p.m. ET 10/15/19.

Docket Numbers: ER19–2848–000.
Applicants: Midcontinent Independent System Operator, Inc.
Description: § 205(d) Rate Filing: 2019–09–23_SA 3354 NSP–NSP GIA (J587) to be effective 9/9/2019.
Filed Date: 9/23/19.
Accession Number: 20190923–5073.
Comments Due: 5 p.m. ET 10/15/19.

Docket Numbers: ER19–2849–000.
Applicants: Arizona Public Service Company.
Description: § 205(d) Rate Filing: Rate Schedule No. 294—Bagdad to be effective 11/23/2019.
Filed Date: 9/23/19.
Accession Number: 20190923–5075.
Comments Due: 5 p.m. ET 10/15/19.

Docket Numbers: ER19–2850–000.
Applicants: Arizona Public Service Company.
Description: § 205(d) Rate Filing: Service Agreement No. 374—Bagdad to be effective 11/23/2019.
Filed Date: 9/23/19.
Accession Number: 20190923–5076.
Comments Due: 5 p.m. ET 10/15/19.

Docket Numbers: ER19–2851–000.
Applicants: PJM Interconnection, L.L.C.
Description: § 205(d) Rate Filing: Amendment to SA No. 2637, Queue S103 & SA No. 3039, W2–075 (consent) to be effective 8/20/2010.
Filed Date: 9/23/19.
Accession Number: 20190923–5081.
Comments Due: 5 p.m. ET 10/15/19.

The filings are accessible in the Commission's eLibrary system by clicking on the links or querying the docket number.

Any person desiring to intervene or protest in any of the above proceedings must file in accordance with Rules 211 and 214 of the Commission's Regulations (18 CFR 385.211 and 385.214) on or before 5:00 p.m. Eastern time on the specified comment date. Protests may be considered, but intervention is necessary to become a party to the proceeding.

eFiling is encouraged. More detailed information relating to filing requirements, interventions, protests, service, and qualifying facilities filings can be found at: *http://www.ferc.gov/docs-filing/efiling/filing-req.pdf.* For other information, call (866) 208–3676 (toll free). For TTY, call (202) 502–8659.

Dated: September 23, 2019.

Nathaniel J. Davis, Sr.,

Deputy Secretary.

[FR Doc. 2019–21045 Filed 9–27–19; 8:45 am]

BILLING CODE 6717–01–P

DEPARTMENT OF ENERGY

Federal Energy Regulatory Commission

[Project No. 2814–025]

Notice of Scoping Meetings and Environmental Site Review and Soliciting Scoping Comments; Great Falls Hydroelectric Company, City of Paterson, New Jersey

Take notice that the following hydroelectric application has been filed with the Commission and is available for public inspection.

a. *Type of Application:* New Major License.
b. *Project No.:* 2814–025.
c. *Date Filed:* February 28, 2019.
d. *Applicants:* Great Falls Hydroelectric Company and the City of Paterson, New Jersey, as co-licensees.
e. *Name of Project:* Great Falls Hydroelectric Project.
f. *Location:* On the Passaic River, near the City of Paterson, Passaic County, New Jersey. The project does not occupy federal land.
g. *Filed Pursuant to:* Federal Power Act 16 U.S.C. 791(a)–825(r).
h. *Applicant Contact:* Mr. Robert Gates, Senior Vice President of Operations, Eagle Creek Renewable Energy, 65 Madison Avenue, Suite 500, Morristown, NJ 07960; (973) 998–8400; email—*bob.gates@eaglecreekre.com* and/or Ben-David Seligman, 2nd Assistant Corp. Counsel, City of Paterson, 155 Market Street, Paterson, NJ; (973) 321–1366; email—*bseligman@patersonnj.gov*.
i. *FERC Contact:* Christopher Millard at (202) 502–8256; or email at *christopher.millard@ferc.gov*.
j. *Deadline for filing scoping comments:* November 23, 2019.

The Commission strongly encourages electronic filing. Please file scoping comments using the Commission's eFiling system at *http://www.ferc.gov/docs-filing/efiling.asp*. Commenters can submit brief comments up to 6,000 characters, without prior registration, using the eComment system at *http://www.ferc.gov/docs-filing/ecomment.asp.* You must include your name and contact information at the end of your comments. For assistance, please contact FERC Online Support at *FERCOnlineSupport@ferc.gov,* (866) 208–3676 (toll free), or (202) 502–8659 (TTY). In lieu of electronic filing, please send a paper copy to: Secretary, Federal Energy Regulatory Commission, 888 First Street NE, Washington, DC 20426. The first page of any filing should include docket number P–2814–025.

k. This application is not ready for environmental analysis at this time.

l. The existing project works consist of: (1) The Society for the Establishment of Useful Manufactures dam, an overflow granite stone gravity structure about 315 feet long, with a maximum height of 15 feet and having a crest elevation of 114.6 feet mean sea level (msl); (2) a reservoir with a surface area of 202 acres and a storage capacity of 1,415 acre-feet at elevation 114.6 feet msl; (3) a forebay inlet structure; (4) a headgate control structure containing three trashracks and three steel gates; (5) three penstocks, each 8.5 feet in diameter and approximately 55 feet long; (6) a powerhouse containing three turbine-generator units with a total rated capacity of 10.95 megawatts; (7) a 37-foot-long, 4.16–kilovolt (kV) underground transmission line connecting the powerhouse to a 4.16/26.4–kV step-up transformer which in turn is connected to a 26.4–kV transmission grid via an approximately 30-foot-long, 26.4–kV underground transmission line; (8) and appurtenant facilities.

The Great Falls Project is operated in a run-of-river mode. For the period 2010 through 2018, the average annual generation at the Great Falls Project was 17,484 megawatt-hours.

m. A copy of the application is available for review at the Commission in the Public Reference Room or may be viewed on the Commission's website at *http://www.ferc.gov* using the ''eLibrary'' link. Enter the docket number excluding the last three digits in the docket number field to access the document. For assistance, contact FERC Online Support. A copy is also available for inspection and reproduction at the address in item h above.

You may also register online at *http://www.ferc.gov/docs-filing/esubscription.asp* to be notified via email of new filings and issuances related to this or other pending projects. For assistance, contact FERC Online Support.

n. Scoping Process.

The Commission intends to prepare an environmental assessment (EA) on the projects in accordance with the National Environmental Policy Act. The EA will consider both site-specific and cumulative environmental impacts and reasonable alternatives to the proposed action.

Scoping Meetings

FERC staff will conduct one agency scoping meeting and one public meeting. The agency scoping meeting will focus on resource agency and non-governmental organization (NGO) concerns, while the public scoping meeting is primarily for public input. All interested individuals, organizations, and agencies are invited to attend one or both of the meetings, and to assist the staff in identifying the scope of the environmental issues that should be analyzed in the EA. The times and locations of these meetings are as follows:

Public Scoping Meeting

Date: Wednesday, October 23, 2019.
Time: 7:00 p.m. (EDT).
Place: Rogers Meeting Center, Second Floor.
Address: 32 Spruce Street, Paterson, New Jersey.

Agency Scoping Meeting

Date: Thursday, October 24, 2019.
Time: 2:00 p.m. (EDT).
Place: Rogers Meeting Center, Second Floor.
Address: 32 Spruce Street, Paterson, New Jersey.

Copies of the Scoping Document (SD1) outlining the subject areas to be addressed in the EA were distributed to the parties on the Commission's mailing list. Copies of the SD1 will be available at the scoping meeting or may be viewed on the web at *http://www.ferc.gov* using the ''eLibrary'' link (see item m above).

Environmental Site Review

The applicants and FERC staff will conduct a project Environmental Site Review beginning at 9:00 a.m. on October 24, 2019. All interested individuals, organizations, and agencies are invited to attend. All participants should meet at the Great Falls Project facility, located at 72 McBride Avenue, Paterson, New Jersey. All participants are responsible for their own transportation to the site and during the site visit. Anyone with questions about the Environmental Site Review should contact Mr. Matt Nini, Relicensing Project Manager for Eagle Creek, at 973–998–8171 or *matthew.nini@eaglecreekre.com*.

Objectives

At the scoping meetings, the staff will: (1) Summarize the environmental issues tentatively identified for analysis in the EA; (2) solicit from the meeting participants all available information, especially quantifiable data, on the resources at issue; (3) encourage statements from experts and the public on issues that should be analyzed in the EA, including viewpoints in opposition to, or in support of, the staff's preliminary views; (4) determine the resource issues to be addressed in the EA; and (5) identify those issues that require a detailed analysis, as well as those issues that do not require a detailed analysis.

Procedures

The meetings are recorded by a stenographer and become part of the formal record of the Commission proceeding on the projects. Individuals, organizations, and agencies with environmental expertise and concerns are encouraged to attend the meeting and to assist the staff in defining and clarifying the issues to be addressed in the EA.

Dated: September 23, 2019.

Nathaniel J. Davis, Sr.,

Deputy Secretary.

[FR Doc. 2019–21141 Filed 9–27–19; 8:45 am]

BILLING CODE 6717–01–P

DEPARTMENT OF ENERGY

Southwestern Power Administration

Integrated System Rate Schedules

AGENCY: Southwestern Power Administration, DOE.

ACTION: Notice of extension of Integrated System rate schedules.

SUMMARY: The Assistant Secretary for Electricity has approved and placed into effect on an interim basis Rate Order No. SWPA–74, which extends the following existing Integrated System rate schedules for the Southwestern Power Administration: *Rate Schedule P–13A, Wholesale Rates for Hydro Peaking Power; Rate Schedule NFTS–13A, Wholesale Rates for Non-Federal Transmission/Interconnection Facilities Service; Rate Schedule EE–13, Wholesale Rates for Excess Energy.* This is an interim rate action effective

October 1, 2019, extending for a period of two years through September 30, 2021.

DATES: The effective period for the rate schedules specified in Rate Order No. SWPA–74 is October 1, 2019 through September 30, 2021.

FOR FURTHER INFORMATION CONTACT: Ms. Fritha Ohlson, Director, Division of Resources and Rates, Office of Corporate Operations, Southwestern Power Administration, U.S. Department of Energy, One West Third Street, Tulsa, Oklahoma 74103, (918) 595–6684, *fritha.ohlson@swpa.gov,* or facsimile transmission (918) 595–6684.

SUPPLEMENTARY INFORMATION: Pursuant to Delegation Order Nos. 00–037.00B, effective November 19, 2016, and 00–002.00Q, effective November 1, 2018, and Redelegation Order No. 00–002.10D, effective June 4, 2019, and pursuant to the implementation authorities in 10 CFR 903.22(h), 10 CFR 903.23(a)(3), and 10 CFR 903.23(b), as amended (84 FR 5347 (Feb. 21, 2019)), Rate Order No. SWPA–74 is approved and placed into effect on an interim basis for the period October 1, 2019, through September 30, 2021, for the following Southwestern Power Administration (Southwestern) Integrated System rate schedules:

Rate Schedule P–13A, Wholesale Rates for Hydro Peaking Power

Rate Schedule NFTS–13A, Wholesale Rates for Non-Federal Transmission/Interconnection Facilities Service

Rate Schedule EE–13, Wholesale Rates for Excess Energy

The Integrated System rate schedules (P–13, NFTS–13 and EE–13) were placed into effect on an interim basis by the Deputy Secretary of Energy and were confirmed and approved on a final basis by the Federal Energy Regulatory Commission (FERC) on January 9, 2014, in Docket No. EF14–1–000 (146 FERC ¶ 62,016) for the period October 1, 2013 through September 30, 2017. Since initial FERC approval, a new section within rate schedule NFTS–13 was added to change from a stated rate to a revenue requirement-based methodology to better align with practices utilized by the Southwest Power Pool, Inc., Regional Transmission Organization. The change had no impact on the Integrated System revenue requirements and the revised rate schedule was re-designated NFTS–13A to reflect the change. The NFTS–13A rate schedule was placed into effect on an interim basis by the Deputy Secretary of Energy and was confirmed and approved on a final basis by FERC on March 9, 2017, in Docket No. EF14–1–001 (158 FERC ¶ 62,182) for the period January 1, 2017 through September 30, 2017. A two-year extension of all Integrated System rate schedules was approved on an interim basis by the Deputy Secretary in Docket No. EF14–1–002 for the period October 1, 2017 through September 30, 2019. Since the Integrated System rate schedules were placed into effect and subsequently extended, there has been one additional change with no impact on revenue requirements. Southwestern added section 4.2 and a corresponding new 1.9 definition section within the Hydro Peaking Power rate schedule P–13 to provide a single instrument and procedure for establishing and making limited adjustments to the time Southwestern requires its customers to submit Peaking Energy schedules. The revised rate schedule was re-designated P–13A to reflect the change. The P–13A rate schedule change was placed into effect on an interim basis by the Assistant Secretary, effective July 1, 2019, through September 30, 2019, and was confirmed and approved on a final basis by FERC in Docket No. EF14–1–003 (Aug. 29, 2019).

Southwestern's Administrator completed an annual review of the continuing adequacy of the existing rate schedules for the Integrated System. This review, as presented in the 2019 Integrated System Power Repayment Studies (PRSs), indicated the need for a 0.8 percent revenue increase to continue to satisfy cost recovery criteria. It is Southwestern's established practice for the Administrator to defer, on a case-by-case basis, revenue adjustments for the Integrated System if such adjustments are within plus or minus two percent of the revenue estimated from the current Integrated System rate schedules. The Administrator has determined it to be prudent to defer the increase and allow the current rate schedules, which are set to expire September 30, 2019, to remain in effect.

The deferral of a revenue adjustment provides for rate stability and savings on the administrative cost of implementation, and recognizes that the revenue sufficiency will be re-examined in the following year's PRSs. Therefore, the Administrator proposes the two-year extension of the Integrated System rate schedules for the period October 1, 2019 through September 30, 2021.

The Administrator has followed part 903, subpart A of Title 10 of the Code of Federal Regulations, ''Procedures for Public Participation in Power and Transmission Rate Adjustments and Extensions'' for the proposed extension to the rate schedules. The public was informed by notice published in the **Federal Register** (84 FR 29200 (June 21, 2019)) of the proposed extension of the rate schedules and of the opportunity to provide written comments for a period of 30 days ending July 22, 2019. No comments were received.

Information regarding the extension of these rate schedules, including the rate schedules and other supporting material, is available for public review in the offices of Southwestern Power Administration, Williams Tower I, One West Third Street, Tulsa, Oklahoma 74103. I have reviewed the Southwestern proposal and I approve Rate Order No. SWPA–74.

Dated: September 22, 2019.

Bruce J. Walker,

Assistant Secretary for Electricity.

UNITED STATES OF AMERICA DEPARTMENT OF ENERGY ASSISTANT SECRETARY

In the matter of:

Southwestern Power Administration) Rate Order

Integrated System Rate Schedules) No. SWPA–74

ORDER APPROVING EXTENSION OF RATE SCHEDULES ON AN INTERIM BASIS

(September 22, 2019)

Pursuant to Sections 302(a) and 301(b) of the Department of Energy Organization Act, Public Law 95–91, the functions of the Secretary of the Interior and the Federal Power Commission under Section 5 of the Flood Control Act of 1944, 16 U.S.C. 825s, relating to the Southwestern Power Administration (Southwestern), were transferred to and vested in the Secretary of Energy. By Delegation Order No. 00–037.00B, the Secretary of Energy delegated to the Administrator of Southwestern (Administrator) the authority to develop power and transmission rates, and delegated to the Federal Energy Regulatory Commission (FERC) the authority to confirm and approve on a final basis or to disapprove rates developed by the Administrator under the delegation. By Delegation Order No. 00–002.00Q, the Secretary of Energy delegated to the Under Secretary (of Energy) the authority to confirm, approve, and place into effect on an interim basis rates developed by the Administrator under delegation. By Redelegation Order No. 00–002.10D, the Under Secretary (of Energy) redelegated to the Assistant Secretary for Electricity (Assistant Secretary) the authority to confirm, approve, and place into effect such rates on an interim basis. Pursuant to that delegated authority, the Assistant

Secretary has issued this interim rate order.

BACKGROUND

The following rate schedules for the Integrated System were confirmed and approved on a final basis by FERC on January 9, 2014, in Docket No. EF14–1–000 (146 FERC ¶ 62,016), for the period October 1, 2013 through September 30, 2017:

Rate Schedule P–13, Wholesale Rates for Hydro Peaking Power

Rate Schedule NFTS–13, Wholesale Rates for Non-Federal Transmission/Interconnection Facilities Service

Rate Schedule EE–13, Wholesale Rates for Excess Energy

Since initial FERC approval, a new section within rate schedule NFTS–13 was added to change from a stated rate to a revenue requirement-based methodology to better align with practices utilized by the Southwest Power Pool, Inc. Regional Transmission Organization. The revised rate schedule was designated NFTS–13A to reflect the change. The following rate schedule was approved on a final basis by FERC on March 9, 2017, in Docket No. EF14–1–001 (158 FERC ¶ 62,182), effective for the period January 1, 2017 through September 30, 2017.

Rate Schedule NFTS–13A, Wholesale Rates for Non-Federal Transmission/Interconnection Facilities Service

A two-year extension of all Integrated System rate schedules was approved on an interim basis by the Deputy Secretary in Docket No. EF14–1–002 for the period October 1, 2017 through September 30, 2019. Subsequently, Southwestern added section 4.2 (together with a new 1.9 definition section) within the Hydro Peaking Power rate schedule P–13 to provide a single instrument and procedure for establishing and making limited adjustments to the time Southwestern requires its customers to submit Peaking Energy schedules. The revised rate schedule was re-designated P–13A to reflect the change. The following rate schedule was placed into effect on an interim basis by the Assistant Secretary, effective July 1, 2019, and was confirmed and approved on a final basis by FERC under Docket No. EF14–1–003 (Aug. 29, 2019).

Rate Schedule P–13A, Wholesale Rates for Hydro Peaking Power

DISCUSSION

The existing Integrated System rate schedules are based on the 2013 Power Repayment Studies (PRSs). PRSs have been completed on the Integrated System each year since approval of the existing rate schedules. The estimated revised annual revenue identified by the subsequent PRSs since the 2013 PRSs has indicated the need for minimal rate increases. Since the revenue changes reflected by the subsequent PRSs were all within the plus or minus two percent rate adjustment threshold practice established by the Administrator on June 23, 1987, these rate adjustments were deferred in the best interest of the government.

However, the existing rate schedules are set to expire on September 30, 2019. Consequently, Southwestern proposed to extend the existing rate schedules for a two-year period ending September 30, 2021, on an interim basis under the implementation authorities noted in 10 CFR 903.22(h) and 10 CFR 903.23(a)(3).

Southwestern followed Part 903 of Title 10 of the Code of Federal Regulations, ''Procedures for Public Participation in Power and Transmission Rate Adjustments and Extensions'' for the proposed extension of the rate schedules. An opportunity for customers and other interested members of the public to review and comment on the proposed extension of the rate schedules was announced by notice published in the **Federal Register** on June 21, 2019 (84 FR 29200), with written comments due by July 22, 2019.

COMMENTS AND RESPONSES

Southwestern received no comments regarding the extension of the rate schedules.

AVAILABILITY OF INFORMATION

Information regarding the extension of the rate schedules is available for public review in the offices of Southwestern Power Administration, Williams Tower I, One West Third Street, Tulsa, Oklahoma 74103.

ADMINISTRATION'S CERTIFICATION

The 2013 Integrated System PRSs indicated that the current rate schedules will repay all costs of the Integrated System, including amortization of the power investment consistent with the provisions of Department of Energy Order No. RA 6120.2. The 2019 Integrated System PRSs indicated the need for an annual revenue increase of 0.8 percent. However, the 2019 rate adjustment falls within Southwestern's established plus or minus two percent Integrated System rate adjustment threshold practice and was deferred.

Southwestern's 2020 PRSs will determine the appropriate level of revenues needed for the next rate period. In accordance with Delegation Order No. 00–037.00B effective November 19, 2016, and Section 5 of the Flood Control Act of 1944, the Administrator has determined that the existing rate schedules are the lowest possible rates consistent with sound business principles, and their extension is consistent with applicable law.

ENVIRONMENT

The Southwestern NEPA Compliance Officer determined that this class of actions is categorically excluded from the requirements of preparing either an Environmental Impact Statement or an Environmental Assessment. No additional evaluation of the environmental impact of the extension of the existing rate schedules was conducted, since no change in anticipated revenues has been made to the currently-approved Integrated System rate schedules.

ADMINISTRATIVE PROCEDURES

Under the Administrative Procedure Act (5 U.S.C. 553(d)), publication or service of a substantive rule must be made not less than 30 days before its effective date, except (1) a substantive rule that grants or recognizes an exemption or relieves a restriction; (2) interpretative rules and statements of policy; or (3) as otherwise provided by the agency for good cause found and published with the rule. The Assistant Secretary finds good cause to waive the 30-day delay in the effective date of this action as unnecessary for the following reasons: (1) This is an extension of rates previously approved by FERC, pursuant to 10 CFR 903.23(a); (2) there are no substantive changes, as the existing rate schedules and anticipated revenues remain the same; and (3) the Administrator provided notice and opportunity for public comment more than 30 days prior to the effective date of the rate extension and received no comments.

ORDER

In view of the foregoing, and pursuant to the authority redelegated to me by the Under Secretary (of Energy), I hereby extend on an interim basis, for the period of two years, effective October 1, 2019 through September 30, 2021, the current Integrated System rate schedules:

Rate Schedule P–13A, Wholesale Rates for Hydro Peaking Power

Rate Schedule NFTS–13A, Wholesale Rates for Non-Federal Transmission/Interconnection Facilities Service

Rate Schedule EE–13, Wholesale Rates for Excess Energy

Dated: September 22, 2019

Bruce J. Walker, Assistant Secretary for Electricity.

UNITED STATES DEPARTMENT OF ENERGY SOUTHWESTERN POWER ADMINISTRATIONRATE SCHEDULE P-13A[1]**

WHOLESALE RATES FOR HYDRO PEAKING POWER

Effective: During the period October 1, 2013, through September 30, 2021**, in accordance with Federal Energy Regulatory Commission (FERC) order issued in Docket No. EF14–1–000 (January 9, 2014), extension approved by the Deputy Secretary in Docket No. EF14–1–002 (September 13, 2017), modification approved by FERC in Docket No. EF14–1–003 (August 29, 2019), and extension approved by the Assistant Secretary in Rate Order No. 74.

Available: In the marketing area of Southwestern Power Administration (Southwestern), described generally as the States of Arkansas, Kansas, Louisiana, Missouri, Oklahoma, and Texas.

Applicable: To wholesale Customers which have contractual rights from Southwestern to purchase Hydro Peaking Power and associated energy (Peaking Energy and Supplemental Peaking Energy).

Character and Conditions of Service: Three-phase, alternating current, delivered at approximately 60 Hertz, at the nominal voltage(s), at the point(s) of delivery, and in such quantities as are specified by contract.

1. Definitions of Terms

1.1. Ancillary Services

The services necessary to support the transmission of capacity and energy from resources to loads while maintaining reliable operation of the System of Southwestern in accordance with good utility practice, which include the following:

1.1.1. Scheduling, System Control, and Dispatch Service

is provided by Southwestern as Balancing Authority Area operator and is in regard to interchange and load-match scheduling and related system control and dispatch functions.

1.1.2. Reactive Supply and Voltage Control from Generation Sources Service

is provided at transmission facilities in the System of Southwestern to produce or absorb reactive power and to maintain transmission voltages within specific limits.

1.1.3. Regulation and Frequency Response Service

is the continuous balancing of generation and interchange resources accomplished by raising or lowering the output of on-line generation as necessary to follow the moment-by-moment changes in load and to maintain frequency within a Balancing Authority Area.

1.1.4. Spinning Operating Reserve Service

maintains generating units on-line, but loaded at less than maximum output, which may be used to service load immediately when disturbance conditions are experienced due to a sudden loss of generation or load.

1.1.5. Supplemental Operating Reserve Service

provides an additional amount of operating reserve sufficient to reduce Area Control Error to zero within 10 minutes following loss of generating capacity which would result from the most severe single contingency.

1.1.6. Energy Imbalance Service

corrects for differences over a period of time between schedules and actual hourly deliveries of energy to a load. Energy delivered or received within the authorized bandwidth for this service is accounted for as an inadvertent flow and is returned to the providing party by the receiving party in accordance with standard utility practice or a contractual arrangement between the parties.

1.2. Customer

The entity which is utilizing and/or purchasing Federal Power and Federal Energy and services from Southwestern pursuant to this Rate Schedule.

1.3. Demand Period

The period of time used to determine maximum integrated rates of delivery for the purpose of power accounting which is the 60-minute period that begins with the change of hour.

1.4. Federal Power and Energy

The power and energy provided from the System of Southwestern.

1.5. Hydro Peaking Power

The Federal Power that Southwestern sells and makes available to the Customers through their respective Power Sales Contracts in accordance with this Rate Schedule.

1.6. Peaking Billing Demand

The quantity equal to the Peaking Contract Demand for any month unless otherwise provided by the Customer's Power Sales Contract.

1.7. Peaking Contract Demand

The maximum rate in kilowatts at which Southwestern is obligated to deliver Federal Energy associated with Hydro Peaking Power as set forth in the Customer's Power Sales Contract.

1.8. Peaking Energy

The Federal Energy associated with Hydro Peaking Power that Southwestern sells and makes available to the Customer in accordance with the terms and conditions of the Customer's Power Sales Contract.

1.9. Peaking Energy Schedule Submission Time

The time by which Southwestern requires the Customer to submit Peaking Energy schedules to Southwestern as provided for in this Rate Schedule and in accordance with the terms and conditions of the Customer's Power Sales Contract.

1.10. Power Sales Contract

The Customer's contract with Southwestern for the sale of Federal Power and Federal Energy.

1.11. Supplemental Peaking Energy

The Federal Energy associated with Hydro Peaking Power that Southwestern sells and makes available to the Customer if determined by Southwestern to be available and that is in addition to the quantity of Peaking Energy purchased by the Customer in accordance with the terms and conditions of the Customer's Power Sales Contract.

1.12. System of Southwestern

The transmission and related facilities owned by Southwestern, and/or the generation, transmission, and related facilities owned by others, the capacity of which, by contract, is available to and utilized by Southwestern to satisfy its contractual obligations to the Customer.

1.13. Uncontrollable Force

Any force which is not within the control of the party affected, including, but not limited to failure of water supply, failure of facilities, flood,

[1] Supersedes Rate Schedule P–13.

** Extended through September 30, 2021, by approval of Rate Order No. SWPA–74 by the Assistant Secretary for Electricity.

earthquake, storm, lightning, fire, epidemic, riot, civil disturbance, labor disturbance, sabotage, war, act of war, terrorist acts, or restraint by court of general jurisdiction, which by exercise of due diligence and foresight such party could not reasonably have been expected to avoid.

2. Wholesale Rates, Terms, and Conditions for Hydro Peaking Power, Peaking Energy, Supplemental Peaking Energy, and Associated Services

Unless otherwise specified, this Section 2 is applicable to all sales under the Customer's Power Sales Contract.

2.1. Hydro Peaking Power Rates, Terms, and Conditions

2.1.1. Monthly Capacity Charge for Hydro Peaking Power

$4.50 per kilowatt of Peaking Billing Demand.

2.1.2. Services Associated with Capacity Charge for Hydro Peaking Power

The capacity charge for Hydro Peaking Power includes such transmission services as are necessary to integrate Southwestern's resources in order to reliably deliver Hydro Peaking Power and associated energy to the Customer. This capacity charge also includes two Ancillary Services charges: Scheduling, System Control, and Dispatch Service; and Reactive Supply and Voltage Control from Generation Sources Service.

2.1.3. Secondary Transmission Service under Capacity Associated with Hydro Peaking Power

Customers may utilize the transmission capacity associated with Peaking Contract Demand for the transmission of non-Federal energy, on a non-firm, as-available basis, at no additional charge for such transmission service or associated Ancillary Services, under the following terms and conditions:

2.1.3.1. The sum of the capacity, for any hour, which is used for Peaking Energy, Supplemental Peaking Energy, and Secondary Transmission Service, may not exceed the Peaking Contract Demand;

2.1.3.2. The non-Federal energy transmitted under such secondary service is delivered to the Customer's point of delivery for Hydro Peaking Power;

2.1.3.3. The Customer commits to provide Real Power Losses associated with such deliveries of non-Federal energy; and

2.1.3.4. Sufficient transfer capability exists between the point of receipt into the System of Southwestern of such non-Federal energy and the Customer's point of delivery for Hydro Peaking Power for the time period that such secondary transmission service is requested.

2.1.4. Adjustment for Reduction in Service

If, during any month, the Peaking Contract Demand associated with a Power Sales Contract in which Southwestern has the obligation to provide 1,200 kilowatthours of Peaking Energy per kilowatt of Peaking Contract Demand is reduced by Southwestern for a period or periods of not less than two consecutive hours by reason of an outage caused by either an Uncontrollable Force or by the installation, maintenance, replacement or malfunction of generation, transmission and/or related facilities on the System of Southwestern, or insufficient pool levels, the Customer's capacity charges for such month will be reduced for each such reduction in service by an amount computed under the formula:

$$R = (C \times K \times H) \div S$$

with the factors defined as follows:

R = The dollar amount of reduction in the monthly total capacity charges for a particular reduction of not less than two consecutive hours during any month, except that the total amount of any such reduction shall not exceed the product of the Customer's capacity charges associated with Hydro Peaking Power times the Peaking Billing Demand.

C = The Customer's capacity charges associated with Hydro Peaking Power for the Peaking Billing Demand for such month.

K = The reduction in kilowatts in Peaking Billing Demand for a particular event.

H = The number of hours duration of such particular reduction.

S = The number of hours that Peaking Energy is scheduled during such month, but not less than 60 hours times the Peaking Contract Demand.

Such reduction in charges shall fulfill Southwestern's obligation to deliver Hydro Peaking Power and Peaking Energy.

2.2. Peaking Energy and Supplemental Peaking Energy Rates, Terms, and Conditions

2.2.1. Peaking Energy Charge

$0.0094 per kilowatthour of Peaking Energy delivered plus the Purchased Power Adder as defined in Section 2.2.3 of this Rate Schedule.

2.2.2. Supplemental Energy Charge

$0.0094 per kilowatthour of Supplemental Peaking Energy delivered.

2.2.3. Purchased Power Adder

A purchased power adder of $0.0059 per kilowatthour of Peaking Energy delivered, as adjusted by the Administrator, Southwestern, in accordance with the procedure within this Rate Schedule.

2.2.3.1. Applicability of Purchased Power Adder: The Purchased Power Adder shall apply to sales of Peaking Energy. The Purchased Power Adder shall not apply to sales of Supplemental Peaking Energy or sales to any Customer which, by contract, has assumed the obligation to supply energy to fulfill the minimum of 1,200 kilowatthours of Peaking Energy per kilowatt of Peaking Contract Demand during a contract year (hereinafter ''Contract Support Arrangements'').

2.2.3.2. Procedure for Determining Net Purchased Power Adder Adjustment: Not more than twice annually, the Purchased Power Adder of $0.0059 (5.9 mills) per kilowatthour of Peaking Energy, as noted in this Rate Schedule, may be adjusted by the Administrator, Southwestern, by an amount up to a total of ±$0.0059 (5.9 mills) per kilowatthour per year, as calculated by the following formula:

$$ADJ = (PURCH - EST + DIF) \div SALES$$

with the factors defined as follows:

ADJ = The dollar per kilowatthour amount of the total adjustment, plus or minus, to be applied to the net Purchased Power Adder, rounded to the nearest $0.0001 per kilowatthour, provided that the total ADJ to be applied in any year shall not vary from the then-effective ADJ by more than $0.0059 per kilowatthour;

PURCH = The actual total dollar cost of Southwestern's System Direct Purchases as accounted for in the financial records of the Southwestern Federal Power System for the period;

EST = The estimated total dollar cost ($13,273,800 per year) of Southwestern's System Direct Purchases used as the basis for the Purchased Power Adder of $0.0059 per kilowatthour of Peaking Energy;

DIF = The accumulated remainder of the difference in the actual and estimated total dollar cost of Southwestern's System Direct Purchases since the effective date of the currently approved Purchased Power Adder set forth in this Rate Schedule, which remainder is not projected for recovery through the ADJ in any previous periods;

SALES = The annual Total Peaking Energy sales projected to be delivered (2,241,300,000 KWh per year) from the System of Southwestern, which total was used as the basis for the $0.0059 per kilowatthour Purchased Power Adder.

2.3. Transformation Service Rates, Terms, and Conditions

2.3.1. Monthly Capacity Charge for Transformation Service

$0.46 per kilowatt will be assessed for capacity used to deliver energy at any point of delivery at which Southwestern provides transformation service for deliveries at voltages of 69 kilovolts or less from higher voltage facilities.

2.3.2. Applicability of Capacity Charge for Transformation Service

Unless otherwise specified by contract, for any particular month, a charge for transformation service will be assessed on the greater of (1) that month's highest metered demand, or (2) the highest metered demand recorded during the previous 11 months, at any point of delivery. For the purpose of this Rate Schedule, the highest metered demand will be based on all deliveries, of both Federal and non-Federal energy, from the System of Southwestern, at such point during such month.

2.4. Ancillary Services Rates, Terms, and Conditions

2.4.1. Capacity Charges for Ancillary Services

2.4.1.1. Regulation and Frequency Response Service: Monthly rate of $0.07 per kilowatt of Peaking Billing Demand plus the Regulation Purchased Adder as defined in Section 2.4.5 of this Rate Schedule.

2.4.1.2. Spinning Operating Reserve Service: Monthly rate of $0.0146 per kilowatt of Peaking Billing Demand.

Daily rate of $0.00066 per kilowatt for non-Federal generation inside Southwestern's Balancing Authority Area.

2.4.1.3. Supplemental Operating Reserve Service: Monthly rate of $0.0146 per kilowatt of Peaking Billing Demand.

Daily rate of $0.00066 per kilowatt for non-Federal generation inside Southwestern's Balancing Authority Area.

2.4.1.4. Energy Imbalance Service: $0.0 per kilowatt for all reservation periods.

2.4.2. Availability of Ancillary Services

Regulation and Frequency Response Service and Energy Imbalance Service are available only for deliveries of power and energy to load within Southwestern's Balancing Authority Area. Spinning Operating Reserve Service and Supplemental Operating Reserve Service are available only for deliveries of non-Federal power and energy generated by resources located within Southwestern's Balancing Authority Area and for deliveries of all Hydro Peaking Power and associated energy from and within Southwestern's Balancing Authority Area. Where available, such Ancillary Services must be taken from Southwestern; unless, arrangements are made in accordance with Section 2.4.4 of this Rate Schedule.

2.4.3. Applicability of Charges for Ancillary Services

For any month, the charges for Ancillary Services for deliveries of Hydro Peaking Power shall be based on the Peaking Billing Demand.

The daily charge for Spinning Operating Reserve Service and Supplemental Operating Reserve Service for non-Federal generation inside Southwestern's Balancing Authority Area shall be applied to the greater of Southwestern's previous day's estimate of the peak, or the actual peak, in kilowatts, of the internal non-Federal generation.

2.4.4. Provision of Ancillary Services by Others

Customers for which Ancillary Services are made available as specified above, must inform Southwestern by written notice of the Ancillary Services which they do *not* intend to take and purchase from Southwestern, and of their election to provide all or part of such Ancillary Services from their own resources or from a third party.

Subject to Southwestern's approval of the ability of such resources or third parties to meet Southwestern's technical and operational requirements for provision of such Ancillary Services, the Customer may change the Ancillary Services which it takes from Southwestern and/or from other sources at the beginning of any month upon the greater of 60 days notice or upon completion of any necessary equipment modifications necessary to accommodate such change; *Provided*, That, if the Customer chooses not to take Regulation and Frequency Response Service, which includes the associated Regulation Purchased Adder, the Customer must pursue these services from a different host Balancing Authority; thereby moving all metered loads and resources from Southwestern's Balancing Authority Area to the Balancing Authority Area of the new host Balancing Authority. Until such time as that meter reconfiguration is accomplished, the Customer will be charged for the Regulation and Frequency Response Service and applicable Adder then in effect. The Customer must notify Southwestern by July 1 of this choice, to be effective the subsequent calendar year.

2.4.5. Regulation Purchased Adder

Southwestern has determined the amount of energy used from storage to provide Regulation and Frequency Response Service in order to meet Southwestern's Balancing Authority Area requirements. The replacement value of such energy used shall be recovered through the Regulation Purchased Adder. The Regulation Purchased Adder during the time period of January 1 through December 31 of the current calendar year is based on the average annual use of energy from storage [1] for Regulation and Frequency Response Service and Southwestern's estimated purchased power price for the corresponding year from the most currently approved Power Repayment Studies.

The Regulation Purchased Adder will be phased in over a period of four (4) years as follows:

Year	Regulation Purchased Adder for the incremental replacement value of energy used from storage
2014	¼ of the average annual use of energy from storage × 2014 Purchased Power price.
2015	½ of the average annual use of energy from storage × 2015 Purchased Power price.
2016	¾ of the average annual use of energy from storage × 2016 Purchased Power price.
2017 and thereafter	The total average annual use of energy from storage × the applicable Purchased Power price.

2.4.5.1. Applicability of Regulation Purchased Adder: The replacement value of the estimated annual use of energy from storage for Regulation and Frequency Response Service shall be recovered by Customers located within

[1] The average annual use of energy from storage for Regulation and Frequency Response Service is based on Southwestern studies.

Southwestern's Balancing Authority Area on a non-coincident peak ratio share basis, divided into twelve equal monthly payments, in accordance with the formula in Section 2.4.5.2.

If the Regulation Purchased Adder is determined and applied under Southwestern's Rate Schedule NFTS-13A, then it shall not be applied here.

2.4.5.2. Procedure for Determining Regulation Purchased Adder: Unless otherwise specified by contract, the Regulation Purchased Adder for an individual Customer shall be based on the following formula rate, calculated to include the replacement value of the estimated annual use of energy from storage by Southwestern for Regulation and Frequency Response Service.

RPA = The Regulation Purchased Adder for an individual Customer per month, which is as follows:

$$[(L_{Customer} \div L_{Total}) \times RP_{Total}] \div 12$$

with the factors defined as follows:

$L_{Customer}$ = The sum in MW of the following three factors:

(1) The Customer's highest metered load plus generation used to serve the Customer's load that is accounted for through a reduction in the Customer's metered load (referred to as 'generation behind the meter') during the previous calendar year, and

(2) The Customer's highest rate of Scheduled Exports [2] during the previous calendar year, and

(3) The Customer's highest rate of Scheduled Imports [2] during the previous calendar year.

L_{Total} = The sum of all $L_{Customer}$ factors for all Customers that were inside Southwestern's Balancing Authority Area at the beginning of the previous calendar year in MW.

RP_{Total} = The ''net'' cost in dollars and cents based on Southwestern's estimated purchased power price for the corresponding year from the most currently approved Power Repayment Studies multiplied by the average annual use of energy from storage, as provided for in the table in Section 2.4.5, to support Southwestern's ability to regulate within its Balancing Authority Area. The ''net'' cost in dollars and cents shall be adjusted by subtracting the product of the quantity of such average annual use of energy from storage in MWh and Southwestern's highest rate in dollars per MWh for Supplemental Peaking Energy during the previous calendar year.

For Customers that have aggregated their load, resources, and scheduling into a single node by contract within Southwestern's Balancing Authority Area, the individual Customer's respective Regulation Purchased Adder shall be that Customer's ratio share of the Regulation Purchased Adder established for the node. Such ratio share shall be determined for the Customer on a non-coincident basis and shall be calculated for the Customer from their highest metered load plus generation behind the meter.

2.4.6. Energy Imbalance Service Limitations

Energy Imbalance Service primarily applies to deliveries of power and energy which are required to satisfy a Customer's load. As Hydro Peaking Power and associated energy are limited by contract, the Energy Imbalance Service bandwidth specified for Non-Federal Transmission Service does not apply to deliveries of Hydro Peaking Power, and therefore Energy Imbalance Service is not charged on such deliveries. Customers who consume a capacity of Hydro Peaking Power greater than their Peaking Contract Demand may be subject to a Capacity Overrun Penalty.

3. Hydro Peaking Power Penalties, Terms, and Conditions

3.1. Capacity Overrun Penalty

3.1.1. Penalty Charge for Capacity Overrun

For each hour during which Hydro Peaking Power was provided at a rate greater than that to which the Customer is entitled, the Customer will be charged a Capacity Overrun Penalty at the following rates:

Months associated with charge	Rate per kilowatt
March, April, May, October, November, December	$0.15
January, February, June, July, August, September	0.30

3.1.2. Applicability of Capacity Overrun Penalty

Customers which have loads within Southwestern's Balancing Authority Area are obligated by contract to provide resources, over and above the Hydro Peaking Power and associated energy purchased from Southwestern, sufficient to meet their loads. A Capacity Overrun Penalty shall be applied only when the formulas provided in Customers' respective Power Sales Contracts indicate an overrun on Hydro Peaking Power, *and* investigation determines that all resources, both firm and non-firm, which were available at the time of the apparent overrun were insufficient to meet the Customer's load.

3.2. Energy Overrun Penalty

3.2.1. Penalty Charge for Energy Overrun

$0.1034 per kilowatthour for each kilowatthour of overrun.

3.2.2. Applicability of Energy Overrun Penalty

By contract, the Customer is subject to limitations on the maximum amounts of Peaking Energy which may be scheduled under the Customer's Power Sales Contract. When the Customer schedules an amount in excess of such maximum amounts, such Customer is subject to the Energy Overrun Penalty.

3.3. Power Factor Penalty

3.3.1. Requirements Related to Power Factor

Any Customer served from facilities owned by or available by contract to Southwestern will be required to maintain a power factor of not less than 95 percent and will be subject to the following provisions.

3.3.2. Determination of Power Factor

The power factor will be determined for all Demand Periods and shall be calculated under the formula:

$$PF = (kWh) \div \sqrt{(kWh^2 + rkVAh^2)}$$

with the factors defined as follows:

PF = The power factor for any Demand Period of the month.

kWh = The total quantity of energy which is delivered during such Demand Period to the point of delivery or interconnection in accordance with Section 3.3.4.

rkVAh = The total quantity of reactive kilovolt-ampere-hours (kVARs) delivered during such Demand Period to the point of delivery or interconnection in accordance with Section 3.3.4.

3.3.3. Penalty Charge for Power Factor

The Customer shall be assessed a penalty for all Demand Periods of a month where the power factor is less than 95 percent lagging. For any Demand Period during a particular month such penalty shall be in accordance with the following formula:

$$C = D \times (0.95 - LPF) \times \$0.10$$

with the factors defined as follows:

C = The charge in dollars to be assessed for any particular Demand Period of such month that the determination of power factor ''PF'' is calculated to be less than 95 percent lagging.

D = The Customer's demand in kilowatts at the point of delivery for such Demand Period in which a low power factor was calculated.

LPF = The lagging power factor, if any, determined by the formula ''PF'' for such Demand Period.

[2] Scheduled Exports and Scheduled Imports are transactions, such as sales and purchases respectively, which are in addition to a Customer's metered load that contribute to Southwestern's Balancing Authority Area need for regulation.

If C is negative, then C = zero (0).

3.3.4. Applicability of Power Factor Penalty

The Power Factor Penalty is applicable to radial interconnections with the System of Southwestern. The total Power Factor Penalty for any month shall be the sum of all charges ''C'' for all Demand Periods of such month. No penalty is assessed for leading power factor. Southwestern, in its sole judgment and at its sole option, may determine whether power factor calculations should be applied to (i) a single physical point of delivery, (ii) a combination of physical points of delivery where a Customer has a single, electrically integrated load, (iii) or interconnections. The general criteria for such decision shall be that, given the configuration of the Customer's and Southwestern's systems, Southwestern will determine, in its sole judgment and at its sole option, whether the power factor calculation more accurately assesses the detrimental impact on Southwestern's system when the above formula is calculated for a single physical point of delivery, a combination of physical points of delivery, or for an interconnection as specified by an Interconnection Agreement.

Southwestern, at its sole option, may reduce or waive Power Factor Penalties when, in Southwestern's sole judgment, low power factor conditions were not detrimental to the System of Southwestern due to particular loading and voltage conditions at the time the power factor dropped below 95 percent lagging.

4. Hydro Peaking Power Miscellaneous Rates, Terms, and Conditions

4.1. Real Power Losses

Customers are required to self-provide all Real Power Losses for non-Federal energy transmitted by Southwestern on behalf of such Customers under the provisions detailed below.

Real Power Losses are computed as four (4) percent of the total amount of non-Federal energy transmitted by Southwestern. The Customer's monthly Real Power Losses are computed each month on a megawatthour basis as follows:

$ML = 0.04 \times NFE$

with the factors defined as follows:

ML = The total monthly loss energy, rounded to the nearest megawatthour, to be scheduled by a Customer for receipt by Southwestern for Real Power Losses associated with non-Federal energy transmitted on behalf of such Customer; and

NFE = The amount of non-Federal energy that was transmitted by Southwestern on behalf of a Customer during a particular month.

The Customer must schedule or cause to be scheduled to Southwestern, Real Power Losses for which it is responsible subject to the following conditions:

4.1.1. The Customer shall schedule and deliver Real Power Losses back to Southwestern during the second month after they were incurred by Southwestern in the transmission of the Customer's non-Federal power and energy over the System of Southwestern unless such Customer has accounted for Real Power Losses as part of a metering arrangement with Southwestern.

4.1.2. On or before the twentieth day of each month, Southwestern shall determine the amount of non-Federal loss energy it provided on behalf of the Customer during the previous month and provide a written schedule to the Customer setting forth hour-by-hour the quantities of non-Federal energy to be delivered to Southwestern as losses during the next month.

4.1.3. Real Power Losses not delivered to Southwestern by the Customer, according to the schedule provided, during the month in which such losses are due shall be billed by Southwestern to the Customer to adjust the end-of-month loss energy balance to zero (0) megawatthours and the Customer shall be obliged to purchase such energy at the following rates:

Months associated with charge	Rate per kilowatthour
March, April, May, October, November, December	$0.15
January, February, June, July, August, September	0.30

4.1.4. Real Power Losses delivered to Southwestern by the Customer in excess of the losses due during the month shall be purchased by Southwestern from the Customer at a rate per megawatthour equal to Southwestern's rate per megawatthour for Supplemental Peaking Energy, as set forth in Southwestern's then-effective Rate Schedule for Hydro Peaking Power to adjust such hourly end-of-month loss energy balance to zero (0) megawatthours.

4.2. Peaking Energy Schedule Submission Time

Southwestern's Peaking Energy Schedule Submission Time is on or before 2:30 p.m. Central Prevailing Time (CPT), as adjusted by the Administrator, Southwestern, in accordance with Section 4.2.2 in this Rate Schedule, of the day preceding the day for the delivery of Peaking Energy. The Peaking Energy Schedule Submission Time supersedes the Peaking Energy schedule submission time provided in the Customer's Power Sales Contract, pursuant to Section 4.2.1 of this Rate Schedule.

4.2.1. Applicability of Peaking Energy Schedule Submission Time

The Peaking Energy Schedule Submission Time shall apply to the scheduling of Peaking Energy. The Peaking Energy Schedule Submission Time shall not apply to the scheduling of Supplemental Peaking Energy or to Contract Support Arrangements.

4.2.2. Procedure for Adjusting the Peaking Energy Schedule Submission Time

Not more than once annually, the Peaking Energy Schedule Submission Time of 2:30 p.m. CPT, as noted in Section 4.2 of this Rate Schedule, may be adjusted by the Administrator, Southwestern, to a time no earlier than 2:00 p.m. CPT and no later than 3:00 p.m. CPT.

4.2.2.1. Determination of Need to Adjust the Peaking Energy Schedule Submission Time: The Administrator, Southwestern, will make a determination on the need to adjust the Peaking Energy Schedule Submission Time based on Southwestern's studies involving financial analysis, regional energy market conditions, and/or operational considerations.

4.2.2.2. Notification of Peaking Energy Schedule Submission Time Adjustment: The Administrator, Southwestern, will notify customers of the determination to adjust the Peaking Energy Schedule Submission Time in writing no later than 30 calendar days prior to the effective date of the Peaking Energy Schedule Submission Time adjustment.

UNITED STATES DEPARTMENT OF ENERGY

SOUTHWESTERN POWER ADMINISTRATION

RATE SCHEDULE NFTS–13A [1] WHOLESALE RATES FOR NON-FEDERAL**

TRANSMISSION/INTERCONNECTION FACILITIES SERVICE

Effective: During the period January 1, 2017, through September 30, 2021*, in accordance with Federal Energy Regulatory Commission (FERC) order issued in Docket No. EF14–1–000 (January 9, 2014), FERC order issued in Docket No. EF14–1–001 (March 9,

[1] Supersedes Rate Schedule NFTS–13.

** Extended through September 30, 2021, by approval of Rate Order No. SWPA–74 by the Assistant Secretary for Electricity.

2017), extension approved by the Deputy Secretary in Docket No. EF14–1–002 (September 13, 2017), and extension approved by the Assistant Secretary in Rate Order No. 74.

Available: In the region of the System of Southwestern.

Applicable: To Customers which have executed Service Agreements with Southwestern for the transmission of non-Federal power and energy over the System of Southwestern or for its use for interconnections. Southwestern will provide services over those portions of the System of Southwestern in which the Administrator, Southwestern, in his or her sole judgment, has determined that uncommitted transmission and transformation capacities in the System of Southwestern are and will be available in excess of the capacities required to market Federal power and energy pursuant to Section 5 of the Flood Control Act of 1944 (58 Stat. 887,890; 16 U.S.C. 825s).

Character and Conditions of Service: Three-phase, alternating current, delivered at approximately 60 Hertz, at the nominal voltage(s), at the point(s) specified by Service Agreement or Transmission Service Transaction.

1. Definitions of Terms

1.1. Ancillary Services

The services necessary to support the transmission of capacity and energy from resources to loads while maintaining reliable operation of the System of Southwestern in accordance with good utility practice, which include the following:

1.1.1. Scheduling, System Control, and Dispatch Service

is provided by Southwestern as Balancing Authority Area operator and is in regard to interchange and load-match scheduling and related system control and dispatch functions.

1.1.2. Reactive Supply and Voltage Control From Generation Sources Service

is provided at transmission facilities in the System of Southwestern to produce or absorb reactive power and to maintain transmission voltages within specific limits.

1.1.3. Regulation and Frequency Response Service

is the continuous balancing of generation and interchange resources accomplished by raising or lowering the output of on-line generation as necessary to follow the moment-by-moment changes in load and to maintain frequency within a Balancing Authority Area.

1.1.4. Spinning Operating Reserve Service

maintains generating units on-line, but loaded at less than maximum output, which may be used to service load immediately when disturbance conditions are experienced due to a sudden loss of generation or load.

1.1.5. Supplemental Operating Reserve Service

provides an additional amount of operating reserve sufficient to reduce Area Control Error to zero within 10 minutes following loss of generating capacity which would result from the most severe single contingency.

1.1.6. Energy Imbalance Service

corrects for differences over a period of time between schedules and actual hourly deliveries of energy to a load. Energy delivered or received within the authorized bandwidth for this service is accounted for as an inadvertent flow and is returned to the providing party by the receiving party in accordance with standard utility practice or a contractual arrangement between the parties.

1.2. Customer

The entity which is utilizing and/or purchasing services from Southwestern pursuant to this Rate Schedule.

1.3. Demand Period

The period of time used to determine maximum integrated rates of delivery for the purpose of power accounting which is the 60-minute period that begins with the change of hour.

1.4. Firm Point-to-Point Transmission Service

Transmission service reserved on a firm basis between specific points of receipt and delivery pursuant to either a Firm Transmission Service Agreement or to a Transmission Service Transaction.

1.5. Interconnection Facilities Service

A service that provides for the use of the System of Southwestern to deliver energy and/or provide system support at an interconnection.

1.6. Network Integration Transmission Service

Transmission service provided under Part III of Southwestern's Open Access Transmission Service Tariff which provides the Customer with firm transmission service for the delivery of capacity and energy from the Customer's resources to the Customer's load.

1.7. Non-Firm Point-to-Point Transmission Service

Transmission service reserved on a non-firm basis between specific points of receipt and delivery pursuant to a Transmission Service Transaction.

1.8. Point of Delivery

Either a single physical point to which electric power and energy are delivered from the System of Southwestern, or a specified set of delivery points which together form a single, electrically integrated load.

1.9. Secondary Transmission Service

Service that is associated with Firm Point-to-Point Transmission Service and Network Integration Transmission Service. For Firm Point-to-Point Transmission Service, it consists of transmission service provided on an as-available, non-firm basis, scheduled within the limits of a particular capacity reservation for transmission service, and scheduled from points of receipt, or to points of delivery, other than those designated in a Long-Term Firm Transmission Service Agreement or a Transmission Service Transaction for Firm Point-to-Point Transmission Service. For Network Integration Transmission Service, Secondary Transmission Service consists of transmission service provided on an as-available, non-firm basis, from resources other than the network resources designated in a Network Transmission Service Agreement, to meet the Customer's network load. The charges for Secondary Transmission Service, other than Ancillary Services, are included in the applicable capacity charges for Firm Point-to-Point Transmission Service and Network Integration Transmission Service.

1.10. Service Agreement

A contract executed between a Customer and Southwestern for the transmission of non-Federal power and energy over the System of Southwestern or for interconnections which include the following:

1.10.1. Firm Transmission Service Agreement

provides for reserved transmission capacity on a firm basis, for a particular point-to-point delivery path.

1.10.2. Interconnection Agreement

provides for the use of the System of Southwestern and recognizes the exchange of mutual benefits for such use or provides for application of a charge for Interconnection Facilities Service.

1.10.3. Network Transmission Service Agreement

provides for the Customer to request firm transmission service for the delivery of capacity and energy from the Customer's network resources to the Customer's network load, for a period of one year or more.

1.10.4. Non-Firm Transmission Service Agreement

provides for the Customer to request transmission service on a non-firm basis.

1.11. Service Request

The request made under a Transmission Service Agreement through the Southwest Power Pool, Inc. (hereinafter ''SPP'') Open Access Same-Time Information System (hereinafter ''OASIS'') for reservation of transmission capacity over a particular point-to-point delivery path for a particular period. The Customer must submit hourly schedules for actual service in addition to the Service Request.

1.12. System of Southwestern

The transmission and related facilities owned by Southwestern, and/or the generation, transmission, and related facilities owned by others, the capacity of which, by contract, is available to and utilized by Southwestern to satisfy its contractual obligations to the Customer.

1.13. Transmission Service Transaction

A Service Request that has been approved by SPP.

1.14. Uncontrollable Force

Any force which is not within the control of the party affected, including, but not limited to failure of water supply, failure of facilities, flood, earthquake, storm, lightning, fire, epidemic, riot, civil disturbance, labor disturbance, sabotage, war, act of war, terrorist acts, or restraint by court of general jurisdiction, which by exercise of due diligence and foresight such party could not reasonably have been expected to avoid.

2. Wholesale Rates, Terms, and Conditions for Firm Point-to-Point Transmission Service, Non-Firm Point-to-Point Transmission Service, Network Integration Transmission Service, and Interconnection Facilities Service

2.1. Firm Point-to-Point Transmission Service Rates, Terms, and Conditions

2.1.1. Monthly Capacity Charge for Firm Point-to-Point Transmission Service

$1.48 per kilowatt of transmission capacity reserved in increments of one month of service or invoiced in accordance with a longer term agreement.

2.1.2. Weekly Capacity Charge for Firm Point-to-Point Transmission Service

$0.370 per kilowatt of transmission capacity reserved in increments of one week of service.

2.1.3. Daily Capacity Charge for Firm Point-to-Point Transmission Service

$0.0673 per kilowatt of transmission capacity reserved in increments of one day of service.

2.1.4. Services Associated With Capacity Charge for Firm Point-to-Point Transmission Service

The capacity charge for Firm Point-to-Point Transmission Service includes Secondary Transmission Service, but does not include charges for Ancillary Services associated with actual schedules.

2.1.5. Applicability of Capacity Charge for Firm Point-to-Point Transmission Service

Capacity charges for Firm Point-to-Point Transmission Service are applied to quantities reserved by contract under a Firm Transmission Service Agreement or in accordance with a Transmission Service Transaction.

A Customer, unless otherwise specified by contract, will be assessed capacity charges on the greatest of (1) the highest metered demand at any particular Point of Delivery during a particular month, rounded up to the nearest whole megawatt, or (2) the highest metered demand recorded at such Point of Delivery during any of the previous 11 months, rounded up to the nearest whole megawatt, or (3) the capacity reserved by contract; which amount shall be considered such Customer's reserved capacity. Secondary Transmission Service for such Customer shall be limited during any month to the most recent metered demand on which that Customer is billed or to the capacity reserved by contract, whichever is greater.

2.2. Non-Firm Point-to-Point Transmission Service Rates, Terms, and Conditions

2.2.1. Monthly Capacity Charge for Non-Firm Point-to-Point Transmission Service

80 percent of the monthly capacity charge for Firm Point-to-Point Transmission Service reserved in increments of one month.

2.2.2. Weekly Capacity Charge for Non-Firm Point-to-Point Transmission Service

80 percent of the monthly capacity charge divided by 4 for Firm Point-to-Point Transmission Service reserved in increments of one week.

2.2.3. Daily Capacity Charge for Non-Firm Point-to-Point Transmission Service

80 percent of the monthly capacity charge divided by 22 for Firm Point-to-Point Transmission Service reserved in increments of one day.

2.2.4. Hourly Capacity Charge for Non-Firm Point-to-Point Transmission Service

80 percent of the monthly capacity charge divided by 352 for Firm Point-to-Point Transmission Service reserved in increments of one hour.

2.2.5. Applicability of Charges for Non-Firm Point-to-Point Transmission Service

Capacity charges for Non-Firm Point-to-Point Transmission Service are applied to quantities reserved under a Transmission Service Transaction, and do not include charges for Ancillary Services.

2.3. Network Integration Transmission Service Rates, Terms, and Conditions

2.3.1. Annual Revenue Requirement for Network Integration Transmission Service

$15,533,800.

2.3.2. Monthly Revenue Requirement for Network Integration Transmission Service

$1,294,483.

2.3.3. Net Capacity Available for Network Integration Transmission Service

872,000 kilowatts.

2.3.4. Monthly Capacity Charge for Network Integration Transmission Service

$1.48 per kilowatt of Network Load (charge derived from $1,294,483 ÷ 872,000 kilowatts).

2.3.5. Applicability of Charges for Network Integration Transmission Service

Network Integration Transmission Service is available only for deliveries of non-Federal power and energy, and is applied to the Customer utilizing such service exclusive of any deliveries of Federal power and energy. The capacity on which charges for any particular Customer utilizing this service is

determined on the greatest of (1) the highest metered demand at any particular point of delivery during a particular month, rounded up to the nearest whole megawatt, or (2) the highest metered demand recorded at such point of delivery during any of the previous 11 months, rounded up to the nearest whole megawatt.

For a Customer taking Network Integration Transmission Service who is also taking delivery of Federal Power and Energy, the highest metered demand shall be determined by subtracting the energy scheduled for delivery of Federal Power and Energy for any hour from the metered demand for such hour.

Secondary transmission Service for a Customer shall be limited during any month to the most recent highest metered demand on which such Customer is billed. Charges for Ancillary Services shall also be assessed.

2.3.6. Procedure for Determining SPP Open Access Transmission Tariff Network Integration Transmission Service Annual Revenue Requirement

The SPP Open Access Transmission Tariff Network Integration Transmission Service Annual Revenue Requirement shall be based on the following formula which shall be calculated when a Customer transitions from a Service Agreement to an agreement for Network Integration Transmission Service under the SPP Open Access Transmission Tariff.

SPP NITS ARR = Southwestern's SPP Network Integration Transmission Service Annual Revenue Requirement, which is as follows:

(SPP NITS Capacity/Southwestern NITS Capacity) × Southwestern NITS ARR

with the factors defined as follows:

SPP NITS Capacity = The capacity on the System of Southwestern utilized for SPP Network Integration Transmission Service which shall be based on the currently approved Power Repayment Studies.

Southwestern NITS Capacity = Net Capacity Available for Network Integration Transmission Service on the System of Southwestern as specified in Section 2.3.3.

Southwestern NITS ARR = Southwestern's Annual Revenue Requirement for Network Integration Transmission Service as specified in Section 2.3.1.

2.4. Interconnection Facilities Service Rates, Terms, and Conditions

2.4.1. Monthly Capacity Charge for Interconnection Facilities Service

$1.48 per kilowatt.

2.4.2. Applicability of Capacity Charge for Interconnection Facilities Service

Any Customer that requests an interconnection from Southwestern which, in Southwestern's sole judgment and at its sole option, does not provide commensurate benefits or compensation to Southwestern for the use of its facilities shall be assessed a capacity charge for Interconnection Facilities Service. For any month, charges for Interconnection Facilities Service shall be assessed on the greater of (1) that month's actual highest metered demand, or (2) the highest metered demand recorded during the previous eleven months, as metered at the interconnection. The use of Interconnection Facilities Service will be subject to power factor provisions as specified in this Rate Schedule. The interconnection customer shall also schedule and deliver Real Power Losses pursuant to the provisions of this Rate Schedule based on metered flow through the interconnection where Interconnection Facilities Services is assessed.

2.5. Transformation Service Rates, Terms, and Conditions

2.5.1. Monthly Capacity Charge for Transformation Service

$0.46 per kilowatt will be assessed for capacity used to deliver energy at any point of delivery at which Southwestern provides transformation service for deliveries at voltages of 69 kilovolts or less from higher voltage facilities.

2.5.2. Applicability of Capacity Charge for Transformation Service

Unless otherwise specified by contract, for any particular month, a charge for transformation service will be assessed on the greater of (1) that month's highest metered demand, or (2) the highest metered demand recorded during the previous 11 months, at any point of delivery. For the purpose of this Rate Schedule, the highest metered demand will be based on all deliveries, of both Federal and non-Federal energy, from the System of Southwestern, at such point during such month.

2.6. Ancillary Services Rates, Terms, and Conditions

2.6.1. Capacity Charges for Ancillary Services

2.6.1.1. Scheduling, System Control, and Dispatch Service: Monthly rate of $0.09 per kilowatt of transmission capacity reserved in increments of one month of service or invoiced in accordance with a Long-Term Firm Transmission Service Agreement or Network Transmission Service Agreement.

Weekly rate of $0.023 per kilowatt of transmission capacity reserved in increments of one week of service.

Daily rate of $0.0041 per kilowatt of transmission capacity reserved in increments of one day of service.

Hourly rate of $0.00026 per kilowatt of transmission energy delivered as non-firm transmission service.

2.6.1.2. Reactive Supply and Voltage Control from Generation Sources Service: Monthly rate of $0.04 per kilowatt of transmission capacity reserved in increments of one month of service or invoiced in accordance with a Long-Term Firm Transmission Service Agreement or Network Transmission Service Agreement.

Weekly rate of $0.010 per kilowatt of transmission capacity reserved in increments of one week of service.

Daily rate of $0.0018 per kilowatt of transmission capacity reserved in increments of one day of service.

Hourly rate of $0.00011 per kilowatt of transmission energy delivered as non-firm transmission service.

2.6.1.3. Regulation and Frequency Response Service: Monthly rate of $0.07 per kilowatt of transmission capacity reserved in increments of one month of service or invoiced in accordance with a Long-Term Firm Transmission Service Agreement or Network Transmission Service Agreement plus the Regulation Purchased Adder as defined in Section 2.6.5 of this Rate Schedule.

Weekly rate of $0.018 per kilowatt of transmission capacity reserved in increments of one week of service plus the Regulation Purchased Adder as defined in Section 2.6.5 of this Rate Schedule.

Daily rate of $0.0032 per kilowatt of transmission capacity reserved in increments of one day of service plus the Regulation Purchased Adder as defined in Section 2.6.5 of this Rate Schedule.

Hourly rate of $0.00020 per kilowatt of transmission energy delivered as non-firm transmission service plus the Regulation Purchased Adder as defined in Section 2.6.5 of this Rate Schedule.

2.6.1.4. Spinning Operating Reserve Service: Monthly rate of $0.0146 per kilowatt of transmission capacity reserved in increments of one month of service or invoiced in accordance with a Long-Term Firm Transmission Service Agreement or Network Transmission Service Agreement.

Weekly rate of $0.00365 per kilowatt of transmission capacity reserved in increments of one week of service.

Daily rate of $0.00066 per kilowatt of transmission capacity reserved in increments of one day of service.

Hourly rate of $0.00004 per kilowatt of transmission energy delivered as non-firm transmission service.

2.6.1.5. Supplemental Operating Reserve Service: Monthly rate of $0.0146 per kilowatt of transmission capacity reserved in increments of one month of service or invoiced in accordance with a Long-Term Firm Transmission Service Agreement or Network Transmission Service Agreement.

Weekly rate of $0.00365 per kilowatt of transmission capacity reserved in increments of one week of service.

Daily rate of $0.00066 per kilowatt of transmission capacity reserved in increments of one day of service.

Hourly rate of $0.00004 per kilowatt of transmission energy delivered as non-firm transmission service.

2.6.1.6. Energy Imbalance Service: $0.0 per kilowatt for all reservation periods.

2.6.2. Availability of Ancillary Services

Scheduling, System Control, and Dispatch Service and Reactive Supply and Voltage Control from Generation Sources Service are available for all transmission services in and from the System of Southwestern and shall be provided by Southwestern. Regulation and Frequency Response Service and Energy Imbalance Service are available only for deliveries of power and energy to load within Southwestern's Balancing Authority Area, and shall be provided by Southwestern, unless, subject to Southwestern's approval, they are provided by others. Spinning Operating Reserve Service and Supplemental Operating Reserve Service are available only for deliveries of power and energy generated by resources located within Southwestern's Balancing Authority Area and shall be provided by Southwestern, unless, subject to Southwestern's approval, they are provided by others.

2.6.3. Applicability of Charges for Ancillary Services

Charges for all Ancillary Services are applied to the transmission capacity reserved or network transmission service taken by the Customer in accordance with the rates listed above when such services are provided by Southwestern.

The charges for Ancillary Services are considered to include Ancillary Services for any Secondary Transmission Service, except in cases where Ancillary Services identified in Sections 2.6.1.3 through 2.6.1.6 of this Rate Schedule are applicable to a Transmission Service Transaction of Secondary Transmission Service, but are not applicable to the transmission capacity reserved under which Secondary Transmission Service is provided. When charges for Ancillary Services are applicable to Secondary Transmission Service, the charge for the Ancillary Service shall be the hourly rate applied to all energy transmitted utilizing the Secondary Transmission Service.

2.6.4. Provision of Ancillary Services by Others

Customers for which Ancillary Services identified in Sections 2.6.1.3 through 2.6.1.6 of this Rate Schedule are made available as specified above must inform Southwestern by written notice of the Ancillary Services which they do *not* intend to take and purchase from Southwestern, and of their election to provide all or part of such Ancillary Services from their own resources or from a third party. Such notice requirements also apply to requests for Southwestern to provide Ancillary Services when such services are available as specified above.

Subject to Southwestern's approval of the ability of such resources or third parties to meet Southwestern's technical and operational requirements for provision of such Ancillary Services, the Customer may change the Ancillary Services which it takes from Southwestern and/or from other sources at the beginning of any month upon the greater of 60 days written notice or upon the completion of any necessary equipment modifications necessary to accommodate such change; *Provided*, That, if the Customer chooses not to take Regulation and Frequency Response Service, which includes the associated Regulation Purchased Adder, the Customer must pursue these services from a different host Balancing Authority; thereby moving all metered loads and resources from Southwestern's Balancing Authority Area to the Balancing Authority Area of the new host Balancing Authority. Until such time as that meter reconfiguration is accomplished, the Customer will be charged for the Regulation and Frequency Response Service and applicable Adder then in effect. The Customer must notify Southwestern by July 1 of this choice, to be effective the subsequent calendar year.

2.6.5. Regulation Purchased Adder

Southwestern has determined the amount of energy used from storage to provide Regulation and Frequency Response Service in order to meet Southwestern's Balancing Authority Area requirements. The replacement value of such energy used shall be recovered through the Regulation Purchased Adder. The Regulation Purchased Adder during the time period of January 1 through December 31 of the current calendar year is based on the average annual use of energy from storage [1] for Regulation and Frequency Response Service and Southwestern's estimated purchased power price for the corresponding year from the most currently approved Power Repayment Studies.

The Regulation Purchased Adder will be phased in over a period of four (4) years as follows:

Year	Regulation Purchased Adder for the incremental replacement value of energy used from storage
2014	¼ of the average annual use of energy from storage × 2014 Purchased Power price.
2015	½ of the average annual use of energy from storage × 2015 Purchased Power price.
2016	¾ of the average annual use of energy from storage × 2016 Purchased Power price.
2017 and thereafter	The total average annual use of energy from storage × the applicable Purchased Power price.

2.6.5.1. Applicability of Regulation Purchased Adder: The replacement value of the estimated annual use of energy from storage for Regulation and Frequency Response Service shall be recovered by Customers located within Southwestern's Balancing Authority Area on a non-coincident peak ratio share basis, divided into twelve equal monthly payments, in accordance with the formula in Section 2.6.5.2.

[1] The average annual use of energy from storage for Regulation and Frequency Response Service is based on Southwestern studies.

If the Regulation Purchased Adder is determined and applied under Southwestern's Rate Schedule P–13, then it shall not be applied here.

2.6.5.2. Procedure for Determining Regulation Purchased Adder: Unless otherwise specified by contract, the Regulation Purchased Adder for an individual Customer shall be based on the following formula rate, calculated to include the replacement value of the estimated annual use of energy from storage by Southwestern for Regulation and Frequency Response Service.

RPA = The Regulation Purchased Adder for an individual Customer per month, which is as follows:

$$[(L_{Customer} \div L_{Total}) \times RP_{Total}] \div 12$$

with the factors defined as follows:

$L_{Customer}$ = The sum in MW of the following three factors:

(1) The Customer's highest metered load plus generation used to serve the Customer's load that is accounted for through a reduction in the Customer's metered load (referred to as 'generation behind the meter') during the previous calendar year, and

(2) The Customer's highest rate of Scheduled Exports [2] during the previous calendar year, and

(3) The Customer's highest rate of Scheduled Imports [2] during the previous calendar year.

L_{Total} = The sum of all $L_{Customer}$ factors for all Customers that were inside Southwestern's Balancing Authority Area at the beginning of the previous calendar year in MW.

RP_{Total} = The ''net'' cost in dollars and cents based on Southwestern's estimated purchased power price for the corresponding year from the most currently approved Power Repayment Studies multiplied by the average annual use of energy from storage, as provided for in the table in Section 2.6.5, to support Southwestern's ability to regulate within its Balancing Authority Area. The ''net'' cost in dollars and cents shall be adjusted by subtracting the product of the quantity of such average annual use of energy from storage in MWh and Southwestern's highest rate in dollars per MWh for Supplemental Peaking Energy during the previous calendar year.

For Customers that have aggregated their load, resources, and scheduling into a single node by contract within Southwestern's Balancing Authority Area, the individual Customer's respective Regulation Purchased Adder shall be that Customer's ratio share of the Regulation Purchased Adder established for the node. Such ratio share shall be determined for the Customer on a non-coincident basis and shall be calculated for the Customer from their highest metered load plus generation behind the meter.

2.6.6. Energy Imbalance Service Limitations

Energy Imbalance Service is authorized for use only within a bandwidth of ± 1.5 percent of the actual requirements of the load at a particular point of delivery, for any hour, compared to the resources scheduled to meet such load during such hour. Deviations which are greater than ± 1.5 percent, but which are less than ± 2,000 kilowatts, are considered to be within the authorized bandwidth. Deviations outside the authorized bandwidth are subject to a Capacity Overrun Penalty.

Energy delivered or received within the authorized bandwidth for this service is accounted for as an inadvertent flow and will be netted against flows in the future. The inadvertent flow in any given hour will only be offset with the flows in the corresponding hour of a day in the same category. Unless otherwise specified by contract, the two categories of days are weekdays and weekend days/North American Electric Reliability Corporation holidays, and this process will result in a separate inadvertent accumulation for each hour of the two categories of days. The hourly accumulations in the current month will be added to the hourly inadvertent balances from the previous month, resulting in a month-end balance for each hour.

The Customer is required to adjust the scheduling of resources in such a way as to reduce the accumulation towards zero. It is recognized that the inadvertent hourly flows can be both negative and positive, and that offsetting flows should deter a significant accumulation of inadvertent. Unless otherwise specified by contract, in the event any hourly month-end balance exceeds 12 MWhs, the excess will be subject to Section 3.1 or Section 3.2 of this Rate Schedule, depending on the direction of the accumulation.

3. Non-Federal Transmission/ Interconnection Facilities Service Penalties, Terms, and Conditions

3.1. Capacity Overrun Penalty

3.1.1. Penalty Charge for Capacity Overrun

For each hour during which energy flows outside the authorized bandwidth, the Customer will be obliged to purchase such energy at the following rates:

Months associated with charge	Rate per kilowatt
March, April, May, October, November, December	$0.15
January, February, June, July, August, September	0.30

3.1.2. Applicability of Capacity Overrun Penalty

Customers who receive deliveries within Southwestern's Balancing Authority Area are obligated to provide resources sufficient to meet their loads. Such obligation is not related to the amount of transmission capacity that such Customers may have reserved for transmission service to a particular load. In the event that a Customer underschedules its resources to serve its load, resulting in a difference between resources and actual metered load (adjusted for transformer losses as applicable) outside the authorized bandwidth for Energy Imbalance Service for any hour, then such Customer is subject to the Capacity Overrun Penalty.

3.2. Unauthorized Use of Energy Imbalance Service by Overscheduling of Resources

In the event that a Customer schedules greater resources than are needed to serve its load, such that energy flows at rates beyond the authorized bandwidth for the use of Energy Imbalance Service, Southwestern retains such energy at no cost to Southwestern and with no obligation to return such energy.

3.3. Power Factor Penalty

3.3.1. Requirements Related to Power Factor

Any Customer served from facilities owned by or available by contract to Southwestern will be required to maintain a power factor of not less than 95 percent and will be subject to the following provisions.

3.3.2. Determination of Power Factor

The power factor will be determined for all Demand Periods and shall be calculated under the formula:

$$PF = (kWh) \div \sqrt{(kWh^2 + rkVAh^2)}$$

with the factors defined as follows:

PF = The power factor for any Demand Period of the month.

kWh = The total quantity of energy which is delivered during such Demand Period to the point of delivery or interconnection in accordance with Section 3.3.4.

rkVAh = The total quantity of reactive kilovolt-ampere-hours (kVARs) delivered during such Demand Period to the point of delivery or interconnection in accordance with Section 3.3.4.

[2] Scheduled Exports and Scheduled Imports are transactions, such as sales and purchases respectively, which are in addition to a Customer's metered load that contribute to Southwestern's Balancing Authority Area need for regulation.

3.3.3. Penalty Charge for Power Factor

The Customer shall be assessed a penalty for all Demand Periods of a month where the power factor is less than 95 percent lagging. For any Demand Period during a particular month such penalty shall be in accordance with the following formula:

$$C = D \times (0.95 - LPF) \times \$0.10$$

with the factors defined as follows:

C = The charge in dollars to be assessed for any particular Demand Period of such month that the determination of power factor ''PF'' is calculated to be less than 95 percent lagging.

D = The Customer's demand in kilowatts at the point of delivery for such Demand Period in which a low power factor was calculated.

LPF = The lagging power factor, if any, determined by the formula ''PF'' for such Demand Period.

If C is negative, then C = zero (0).

3.3.4. Applicability of Power Factor Penalty

The Power Factor Penalty is applicable to radial interconnections with the System of Southwestern. The total Power Factor Penalty for any month shall be the sum of all charges ''C'' for all Demand Periods of such month. No penalty is assessed for leading power factor. Southwestern, in its sole judgment and at its sole option, may determine whether power factor calculations should be applied to (i) a single physical point of delivery, (ii) a combination of physical points of delivery where a Customer has a single, electrically integrated load, (iii) or interconnections. The general criteria for such decision shall be that, given the configuration of the Customer's and Southwestern's systems, Southwestern will determine, in its sole judgment and at its sole option, whether the power factor calculation more accurately assesses the detrimental impact on Southwestern's system when the above formula is calculated for a single physical point of delivery, a combination of physical points of delivery, or for an interconnection as specified by an Interconnection Agreement.

Southwestern, at its sole option, may reduce or waive Power Factor Penalties when, in Southwestern's sole judgment, low power factor conditions were not detrimental to the System of Southwestern due to particular loading and voltage conditions at the time the power factor dropped below 95 percent lagging.

4. Non-Federal Transmission/ Interconnection Facilities Service Miscellaneous Rates, Terms, and Conditions

4.1. Real Power Losses

Customers are required to self-provide all Real Power Losses for non-Federal energy transmitted by Southwestern on behalf of such Customers under the provisions detailed below.

Real Power Losses are computed as four (4) percent of the total amount of non-Federal energy transmitted by Southwestern. The Customer's monthly Real Power Losses are computed each month on a megawatthour basis as follows:

$$ML = 0.04 \times NFE$$

with the factors defined as follows:

ML = The total monthly loss energy, rounded to the nearest megawatthour, to be scheduled by a Customer for receipt by Southwestern for Real Power Losses associated with non-Federal energy transmitted on behalf of such Customer; and

NFE = The amount of non-Federal energy that was transmitted by Southwestern on behalf of a Customer during a particular month.

The Customer must schedule or cause to be scheduled to Southwestern, Real Power Losses for which it is responsible subject to the following conditions:

4.1.1. The Customer shall schedule and deliver Real Power Losses back to Southwestern during the second month after they were incurred by Southwestern in the transmission of the Customer's non-Federal power and energy over the System of Southwestern unless such Customer has accounted for Real Power Losses as part of a metering arrangement with Southwestern.

4.1.2. On or before the twentieth day of each month, Southwestern shall determine the amount of non-Federal loss energy it provided on behalf of the Customer during the previous month and provide a written schedule to the Customer setting forth hour-by-hour the quantities of non-Federal energy to be delivered to Southwestern as losses during the next month.

4.1.3. Real Power Losses not delivered to Southwestern by the Customer, according to the schedule provided, during the month in which such losses are due shall be billed by Southwestern to the Customer to adjust the end-of-month loss energy balance to zero (0) megawatthours and the Customer shall be obliged to purchase such energy at the following rates:

Months associated with charge	Rate per kilowatthour
March, April, May, October, November, December	$0.15
January, February, June, July, August, September	0.30

4.1.4. Real Power Losses delivered to Southwestern by the Customer in excess of the losses due during the month shall be purchased by Southwestern from the Customer at a rate per megawatthour equal to Southwestern's rate per megawatthour for Supplemental Peaking Energy, as set forth in Southwestern's then-effective Rate Schedule for Hydro Peaking Power to adjust such hourly end-of-month loss energy balance to zero (0) megawatthours.

UNITED STATES DEPARTMENT OF ENERGY

SOUTHWESTERN POWER ADMINISTRATION

RATE SCHEDULE EE–13 [1]**

WHOLESALE RATES FOR EXCESS ENERGY

Effective: During the period October 1, 2013, through September 30, 2021**, in accordance with Federal Energy Regulatory Commission (FERC) order issued in Docket No. EF14–1–000 (January 9, 2014), extension approved by the Deputy Secretary in Docket No. EF14–1–002 (September 13, 2017), and extension approved by the Assistant Secretary in Rate Order No. 74.

Available: In the marketing area of Southwestern Power Administration (Southwestern), described generally as the States of Arkansas, Kansas, Louisiana, Missouri, Oklahoma, and Texas.

Applicable: To electric utilities which, by contract, may purchase Excess Energy from Southwestern.

Character and Conditions of Service: Three-phase, alternating current, delivered at approximately 60 Hertz, at the nominal voltage(s) and at the point(s) of delivery specified by contract.

1. Wholesale Rates, Terms, and Conditions for Excess Energy

Excess Energy will be furnished at such times and in such amounts as Southwestern determines to be available.

[1] Supersedes Rate Schedule EE–11.

** Extended through September 30, 2021, by approval of Rate Order No. SWPA–74 by the Assistant Secretary for Electricity.

1.2. Transmission and Related Ancillary Services

Transmission service for the delivery of Excess Energy shall be the sole responsibility of such customer purchasing Excess Energy.

1.3. Excess Energy Charge

$0.0094 per kilowatthour of Excess Energy delivered.

[FR Doc. 2019–21040 Filed 9–27–19; 8:45 am]

BILLING CODE 6450–01–P

DEPARTMENT OF ENERGY

Southwestern Power Administration

Sam Rayburn Dam Rate Schedule

AGENCY: Southwestern Power Administration, DOE.

ACTION: Notice of extension of Sam Rayburn Dam rate schedule.

SUMMARY: The Assistant Secretary for Electricity has approved and placed into effect on an interim basis Rate Order No. SWPA–75, which extends the following existing Sam Rayburn Dam rate schedule for the Southwestern Power Administration: *Rate Schedule SRD–15, Wholesale Rates for Hydro Power and Energy.* This is an interim rate action effective October 1, 2019, extending for a period of two years through September 30, 2021.

DATES: The effective period for the rate schedule specified in Rate Order No. SWPA–75 is October 1, 2019 through September 30, 2021.

FOR FURTHER INFORMATION CONTACT: Ms. Fritha Ohlson, Director, Division of Resources and Rates, Office of Corporate Operations, Southwestern Power Administration, U.S. Department of Energy, One West Third Street, Tulsa, Oklahoma 74103, (918) 595–6684, *fritha.ohlson@swpa.gov,* or facsimile transmission (918) 595–6684.

SUPPLEMENTARY INFORMATION: Pursuant to Delegation Order Nos. 00–037.00B, effective November 19, 2016, and 00–002.00Q, effective November 1, 2018, and Redelegation Order No. 00–002.10D, effective June 4, 2019, and pursuant to the implementation authorities in 10 CFR 903.22(h), 10 CFR 903.23(a)(3), and 10 CFR 903.23(b), as amended (84 FR 5347 (Feb. 21, 2019)), Rate Order No. SWPA–75 is approved and placed into effect on an interim basis for the period October 1, 2019 through September 30, 2021, for the following Southwestern Power Administration (Southwestern) Sam Rayburn Dam rate schedule:

Rate Schedule SRD–15, Wholesale Rates for Hydro Power and Energy

The Sam Rayburn Dam rate schedule (SRD–15) was placed into effect on an interim basis by the Deputy Secretary and was confirmed and approved on a final basis by the Federal Energy Regulatory Commission (FERC) on June 30, 2016, in Docket No. EF16–2–000 (155 FERC ¶ 62,254) for the period January 1, 2016 through September 30, 2019. The 2019 Sam Rayburn Dam power repayment studies (PRSs) indicated the need for a 1.7 percent revenue increase to continue to satisfy cost recovery criteria. It is Southwestern's established practice for the Administrator to defer, on a case by case basis, revenue adjustments for an isolated project if such adjustments are within plus or minus five percent of the revenue estimated from the current rate schedule. The Administrator determined it to be prudent to defer the increase and allow the current rate schedule, which is set to expire September 30, 2019, to remain in effect.

The deferral of a revenue adjustment provides for rate stability and savings on the administrative cost of implementation, and recognizes that the revenue sufficiency will be re-examined in the following year's PRSs. Therefore, the Administrator proposes the two-year extension of the Sam Rayburn Dam rate schedule for the period October 1, 2019 through September 30, 2021.

The Administrator has followed part 903, subpart A of Title 10 of the Code of Federal Regulations, ''Procedures for Public Participation in Power and Transmission Rate Adjustments and Extensions'' for the proposed extension to the rate schedule. The public was advised by notice published in the **Federal Register** (84 FR 29200 (June 21, 2019)) of the proposed extension of the rate schedules and of the opportunity to provide written comments for a period of 30 days ending July 22, 2019. No comments were received.

Information regarding the extension of this rate schedule, including the rate schedule and other supporting material, is available for public review in the offices of Southwestern Power Administration, Williams Tower I, One West Third Street, Tulsa, Oklahoma 74103. I have reviewed the Southwestern proposal and I approve Rate Order No. SWPA–75.

Dated: September 22, 2019.

Bruce J. Walker,

Assistant Secretary for Electricity.

UNITED STATES OF AMERICA DEPARTMENT OF ENERGY ASSISTANT SECRETARY

In the matter of: Southwestern Power Administration, Sam Rayburn Dam Rate Schedule

Rate Order

No. SWPA–75

ORDER APPROVING EXTENSION OF RATE SCHEDULE ON AN INTERIM BASIS

(September 22, 2019)

Pursuant to Sections 302(a) and 301(b) of the Department of Energy Organization Act, Public Law 95–91, the functions of the Secretary of the Interior and the Federal Power Commission under Section 5 of the Flood Control Act of 1944, 16 U.S.C. 825s, relating to the Southwestern Power Administration (Southwestern), were transferred to and vested in the Secretary of Energy. By Delegation Order No. 00-037.00B, the Secretary of Energy delegated to the Administrator of Southwestern (Administrator) the authority to develop power and transmission rates, and delegated to the Federal Energy Regulatory Commission (FERC) the authority to confirm and approve on a final basis or to disapprove rates developed by the Administrator under the delegation. By Delegation Order No. 00-002.00Q, the Secretary of Energy delegated to the Under Secretary (of Energy) the authority to confirm, approve, and place into effect on an interim basis rates developed by the Administrator under delegation. By Redelegation Order No. 00-002.10D, the Under Secretary (of Energy) redelegated to the Assistant Secretary for Electricity (Assistant Secretary) the authority to confirm, approve, and place into effect such rates on an interim basis. Pursuant to that delegated authority, the Assistant Secretary has issued this interim rate order.

BACKGROUND

The following rate schedule for Sam Rayburn Dam was confirmed and approved on a final basis by FERC on June 30, 2016 in Docket No. EF16–2-000 (155 FERC ¶ 62,254) for the period January 1, 2016 through September 30, 2019.

Rate Schedule SRD-15, Wholesale Rates for Hydro Power and Energy

DISCUSSION

The existing Sam Rayburn Dam rate schedule is based on the 2015 power

repayment studies (PRSs). PRSs have been completed on the Sam Rayburn Dam isolated project each year since approval of the existing rate schedule. The estimated revised annual revenue identified by the subsequent PRSs since the 2015 PRSs has indicated the need for minimal rate increases. Since the revenue changes reflected by the subsequent PRSs were all within the plus or minus five percent isolated project rate adjustment threshold practice established by the Administrator on September 8, 2003, these rate adjustments were deferred in the best interest of the government.

However, the existing rate schedule is set to expire on September 30, 2019. Consequently, Southwestern proposed to extend the existing rate schedule for a two-year period ending September 30, 2021, on an interim basis under the implementation authorities noted in 10 CFR 903.22(h) and 10 CFR 903.23(a)(3).

Southwestern followed Part 903 of Title 10 of the Code of Federal Regulations, ''Procedures for Public Participation in Power and Transmission Rate Adjustments and Extensions'' for the proposed extension of the rate schedule. An opportunity for customers and other interested members of the public to review and comment on the proposed extension of the rate schedule was announced by notice published in the **Federal Register** on June 21, 2019 (84 FR 29200), with written comments due by July 22, 2019.

COMMENTS AND RESPONSES

Southwestern received no comments regarding the extension of the rate schedule.

AVAILABILITY OF INFORMATION

Information regarding the extension of the rate schedule is available for public review in the offices of Southwestern Power Administration, Williams Tower I, One West Third Street, Tulsa, Oklahoma 74103.

ADMINISTRATION'S CERTIFICATION

The 2015 Sam Rayburn Dam PRSs indicated that the current rate schedule will repay all costs, including amortization of the power investment consistent with the provisions of Department of Energy Order No. RA 6120.2. The 2019 Sam Rayburn Dam PRSs indicated the need for an annual revenue increase of 1.7 percent. However, the 2019 rate adjustment falls within Southwestern's established plus or minus five percent isolated project rate adjustment threshold practice and was deferred.

Southwestern's 2020 PRSs will determine the appropriate level of revenues needed for the next rate period. In accordance with Delegation Order No. 00–037.00B, effective November 19, 2016, and Section 5 of the Flood Control Act of 1944, the Administrator has determined that the existing rate schedule is the lowest possible rate consistent with sound business principles, and the extension is consistent with applicable law.

ENVIRONMENT

The Southwestern NEPA Compliance Officer determined that this class of actions is categorically excluded from the requirements of preparing either an Environmental Impact Statement or an Environmental Assessment. No additional evaluation of the environmental impact of the extension of the existing rate schedule was conducted, since no change in anticipated revenues has been made to the currently-approved rate schedule.

ADMINISTRATIVE PROCEDURES

Under the Administrative Procedure Act (5 U.S.C. 553(d)), publication or service of a substantive rule must be made not less than 30 days before its effective date, except (1) a substantive rule that grants or recognizes an exemption or relieves a restriction; (2) interpretative rules and statements of policy; or (3) as otherwise provided by the agency for good cause found and published with the rule. The Assistant Secretary finds good cause to waive the 30-day delay in the effective date of this action as unnecessary for the following reasons: 1) this is an extension of rates previously approved by FERC, pursuant to 10 CFR 903.23(a); 2) there are no substantive changes, as the existing rate schedule and anticipated revenues remain the same; and 3) the Administrator provided notice and opportunity for public comment more than 30 days prior to the effective date of the rate extension and received no comments.

ORDER

In view of the foregoing, and pursuant to the authority redelegated to me by the Under Secretary (of Energy), I hereby extend on an interim basis, for the period of two years, effective October 1, 2019 through September 30, 2021, the current Sam Rayburn Dam rate schedule:

Rate Schedule SRD-15, Wholesale Rates for Hydro Power and Energy

Dated: September 22, 2019

Bruce J. Walker

Assistant Secretary for Electricity

UNITED STATES DEPARTMENT OF ENERGY

SOUTHWESTERN POWER ADMINISTRATION

RATE SCHEDULE SRD–15[1] **

WHOLESALE RATES FOR HYDRO POWER AND ENERGY

SOLD TO SAM RAYBURN DAM ELECTRIC COOPERATIVE, INC.

(CONTRACT NO. DE–PM75–92SW00215)

Effective:

During the period January 1, 2016, through September 30, 2021 **, in accordance with Federal Energy Regulatory Commission (FERC) order issued in Docket No. EF16–2–000 (June 30, 2016) and extension approved by the Assistant Secretary in Rate Order No. 75.

Applicable:

To the power and energy purchased by Sam Rayburn Dam Electric Cooperative, Inc. (SRDEC) from the Southwestern Power Administration (Southwestern) under the terms and conditions of the Power Sales Contract dated October 7, 1992, as amended, for the sale of all Hydro Power and Energy generated at the Sam Rayburn Dam and Reservoir.

Character and Conditions of Service:

Three-phase, alternating current, delivered at approximately 60 Hertz, at the nominal voltage, at the point of delivery, and in such quantities as are specified by contract.

1. Wholesale Rates, Terms, and Conditions for Hydro Power and Energy

1.1. This rate shall be applicable regardless of the quantity of Hydro Power and Energy available or delivered to SRDEC; *provided*, *however*, that if an Uncontrollable Force prevents utilization of both of the project's power generating units for an entire billing period, and if during such billing period water releases were being made which otherwise would have been used to generate Hydro Power and Energy, then Southwestern shall, upon request by SRDEC, suspend billing for subsequent billing periods, until such time as at least one of the project's generating units is again available.

1.2. The term ''Uncontrollable Force,'' as used herein, shall mean any force which is not within the control of

[1] Supersedes Rate Schedule SRD–13

** Extended through September 30, 2021, by approval of Rate Order No. SWPA-75 by the Assistant Secretary for Electricity.

the party affected, including, but not limited to, failure of water supply, failure of facilities, flood, earthquake, storm, lightning, fire, epidemic, riot, civil disturbance, labor disturbance, sabotage, war, acts of war, terrorist acts, or restraint by court of general jurisdiction, which by exercise of due diligence and foresight such party could not reasonably have been expected to avoid.

1.3. **Hydro Power Rates, Terms, and Conditions**

1.3.1. Monthly Charge for the Period of January 1, 2016 through September 30, 2021

$380,316 per month ($4,563,792 per year) for Sam Rayburn Dam Hydro Power and Energy purchased by SRDEC from January 1, 2016, through September 30, 2021.

[FR Doc. 2019–21041 Filed 9–27–19; 8:45 am]

BILLING CODE 6450–01–P

DEPARTMENT OF ENERGY

Southwestern Power Administration

Robert D. Willis Hydropower Project Rate Schedule

AGENCY: Southwestern Power Administration, DOE.

ACTION: Notice of extension of Robert D. Willis Hydropower Project rate schedule.

SUMMARY: The Assistant Secretary for Electricity has approved and placed into effect on an interim basis Rate Order No. SWPA–76, which extends the following existing Robert D. Willis Hydropower Project rate schedule for the Southwestern Power Administration: *Rate Schedule RDW–15, Wholesale Rates for Hydro Power and Energy.* This is an interim rate action effective October 1, 2019, extending for a period of two years through September 30, 2021.

DATES: The effective period for the rate schedule specified in Rate Order No. SWPA–76 is October 1, 2019, through September 30, 2021.

FOR FURTHER INFORMATION CONTACT: Ms. Fritha Ohlson, Director, Division of Resources and Rates, Office of Corporate Operations, Southwestern Power Administration, U.S. Department of Energy, One West Third Street, Tulsa, Oklahoma 74103, (918) 595–6684, *fritha.ohlson@swpa.gov,* or facsimile transmission (918) 595–6684.

SUPPLEMENTARY INFORMATION: Pursuant to Delegation Order Nos. 00–037.00B, effective November 19, 2016, and 00–002.00Q, effective November 1, 2018, and Redelegation Order No. 00–002.10D, effective June 4, 2019, and pursuant to the implementation authorities in 10 CFR 903.22(h), 10 CFR 903.23(a)(3), and 10 CFR 903.23(b), as amended (84 FR 5347 (Feb. 21, 2019)), Rate Order No. SWPA–76 is approved and placed into effect on an interim basis for the period October 1, 2019 through September 30, 2021, for the following Southwestern Power Administration (Southwestern) Robert D. Willis Hydropower Project (Robert D. Willis) rate schedule:

Rate Schedule RDW–15, Wholesale Rates for Hydro Power and Energy

The Robert D. Willis rate schedule (RDW–15) was placed into effect on an interim basis by the Deputy Secretary and was confirmed and approved on a final basis by the Federal Energy Regulatory Commission (FERC) on June 15, 2016, in Docket No. EF16–1–000 (155 FERC ¶ 62,213) for the period January 1, 2016 through September 30, 2019. The 2019 Robert D. Willis power repayment studies (PRSs) indicated the need for a 3.7 percent revenue increase to continue to satisfy cost recovery criteria. It is Southwestern's established practice for the Administrator to defer, on a case by case basis, revenue adjustments for an isolated project if such adjustments are within plus or minus five percent of the revenue estimated from the current rate schedule. The Administrator determined it to be prudent to defer the increase and allow the current rate schedule, which is set to expire September 30, 2019, to remain in effect.

The deferral of a revenue adjustment provides for rate stability and savings on the administrative cost of implementation, and recognizes that the revenue sufficiency will be re-examined in the following year's PRSs. Therefore, the Administrator proposes the two-year extension of the Robert D. Willis rate schedule for the period October 1, 2019 through September 30, 2021.

The Administrator has followed part 903, subpart A of Title 10 of the Code of Federal Regulations, ''Procedures for Public Participation in Power and Transmission Rate Adjustments and Extensions'' for the proposed extension to the rate schedule. The public was advised by notice published in the **Federal Register** (84 FR 29200 (June 21, 2019)) of the proposed extension of the rate schedules and of the opportunity to provide written comments for a period of 30 days ending July 22, 2019. No comments were received.

Information regarding the extension of this rate schedule, including the rate schedule and other supporting material, is available for public review in the offices of Southwestern Power Administration, Williams Tower I, One West Third Street, Tulsa, Oklahoma 74103. I have reviewed the Southwestern proposal and I approve Rate Order No. SWPA–76.

Dated: September 22, 2019.

Bruce J. Walker,

Assistant Secretary for Electricity.

UNITED STATES OF AMERICA DEPARTMENT OF ENERGY ASSISTANT SECRETARY

In the matter of: Southwestern Power Administration, Robert D. Willis Hydropower Project Rate Schedule

Rate Order

No. SWPA–76

ORDER APPROVING EXTENSION OF RATE SCHEDULE ON AN INTERIM BASIS

(September 22, 2019)

Pursuant to Sections 302(a) and 301(b) of the Department of Energy Organization Act, Public Law 95–91, the functions of the Secretary of the Interior and the Federal Power Commission under Section 5 of the Flood Control Act of 1944, 16 U.S.C. 825s, relating to the Southwestern Power Administration (Southwestern), were transferred to and vested in the Secretary of Energy. By Delegation Order No. 00–037.00B, the Secretary of Energy delegated to the Administrator of Southwestern (Administrator) the authority to develop power and transmission rates, and delegated to the Federal Energy Regulatory Commission (FERC) the authority to confirm and approve on a final basis or to disapprove rates developed by the Administrator under the delegation. By Delegation Order No. 00-002.00Q, the Secretary of Energy delegated to the Under Secretary (of Energy) the authority to confirm, approve, and place into effect on an interim basis rates developed by the Administrator under delegation. By Redelegation Order No. 00-002.10D, the Under Secretary (of Energy) redelegated to the Assistant Secretary for Electricity (Assistant Secretary) the authority to confirm, approve, and place into effect such rates on an interim basis. Pursuant to that delegated authority, the Assistant Secretary has issued this interim rate order.

BACKGROUND

The following rate schedule for the Robert D. Willis Hydropower Project (Robert D. Willis) was confirmed and approved on a final basis by FERC on June 15, 2016, in Docket No. EF16–1–

000 (155 FERC ¶ 62,213) for the period January 1, 2016 through September 30, 2019.

Rate Schedule RDW-15, Wholesale Rates for Hydro Power and Energy

DISCUSSION

The existing Robert D. Willis rate schedule is based on the 2015 power repayment studies (PRSs). PRSs have been completed on the Robert D. Willis isolated project each year since approval of the existing rate schedule. The estimated revised annual revenue identified by the subsequent PRSs since the 2015 PRSs has indicated the need for minimal rate increases. Since the revenue changes reflected by the subsequent PRSs were all within the plus or minus five percent isolated project rate adjustment threshold practice established by the Administrator on September 8, 2003, these rate adjustments were deferred in the best interest of the government.

However, the existing rate schedule is set to expire on September 30, 2019. Consequently, Southwestern proposed to extend the existing rate schedule for a two-year period ending September 30, 2021, on an interim basis under the implementation authorities noted in 10 CFR 903.22(h) and 10 CFR 903.23(a)(3).

Southwestern followed Part 903 of Title 10 of the Code of Federal Regulations, ''Procedures for Public Participation in Power and Transmission Rate Adjustments and Extensions'' for the proposed extension of the rate schedule. An opportunity for customers and other interested members of the public to review and comment on the proposed extension of the rate schedule was announced by notice published in the **Federal Register** on June 21, 2019, (84 FR 29200), with written comments due by July 22, 2019.

COMMENTS AND RESPONSES

Southwestern received no comments regarding the extension of the rate schedule.

AVAILABILITY OF INFORMATION

Information regarding the extension of the rate schedule is available for public review in the offices of Southwestern Power Administration, Williams Tower I, One West Third Street, Tulsa, Oklahoma 74103.

ADMINISTRATION'S CERTIFICATION

The 2015 Robert D. Willis PRSs indicated that the current rate schedule will repay all costs, including amortization of the power investment consistent with the provisions of Department of Energy Order No. RA 6120.2. The 2019 Robert D. Willis PRSs indicated the need for an annual revenue increase of 3.7 percent. However, the 2019 rate adjustment falls within Southwestern's established plus or minus five percent isolated project rate adjustment threshold practice and was deferred.

Southwestern's 2020 PRSs will determine the appropriate level of revenues needed for the next rate period. In accordance with Delegation Order No. 00–037.00B, effective November 19, 2016, and Section 5 of the Flood Control Act of 1944, the Administrator has determined that the existing rate schedule is the lowest possible rate consistent with sound business principles, and the extension is consistent with applicable law.

ENVIRONMENT

The Southwestern NEPA Compliance Officer determined that this class of actions is categorically excluded from the requirements of preparing either an Environmental Impact Statement or an Environmental Assessment. No additional evaluation of the environmental impact of the extension of the existing rate schedule was conducted, since no change in anticipated revenues has been made to the currently-approved rate schedule.

ADMINISTRATIVE PROCEDURES

Under the Administrative Procedure Act (5 U.S.C. 553(d)), publication or service of a substantive rule must be made not less than 30 days before its effective date, except (1) a substantive rule that grants or recognizes an exemption or relieves a restriction; (2) interpretative rules and statements of policy; or (3) as otherwise provided by the agency for good cause found and published with the rule. The Assistant Secretary finds good cause to waive the 30-day delay in the effective date of this action as unnecessary for the following reasons: 1) this is an extension of rates previously approved by FERC, pursuant to 10 CFR 903.23(a); 2) there are no substantive changes as the existing rate schedule and anticipated revenues remain the same; and 3) the Administrator provided notice and opportunity for public comment more than 30 days prior to the effective date of the rate extension and received no comments.

ORDER

In view of the foregoing, and pursuant to the authority redelegated to me by the Under Secretary (of Energy), I hereby extend on an interim basis, for the period of two years, effective October 1, 2019 through September 30, 2021, the current Robert D. Willis rate schedule:

Rate Schedule RDW-15, Wholesale Rates for Hydro Power and Energy

Dated: September 22, 2019b

Bruce J. Walker

Assistant Secretary for Electricity

UNITED STATES DEPARTMENT OF ENERGY

SOUTHWESTERN POWER ADMINISTRATION

RATE SCHEDULE RDW–15 [1] **

WHOLESALE RATES FOR HYDRO POWER AND ENERGY

SOLD TO SAM RAYBURN MUNICIPAL POWER AGENCY

(CONTRACT NO. DE-PM75-85SW00117)

Effective:

During the period January 1, 2016, through September 30, 2021**, in accordance with Federal Energy Regulatory Commission (FERC) order issued in Docket No. EF16–1–000 (June 15, 2016) and extension approved by the Assistant Secretary in Rate Order No. 76.

Applicable:

To the power and energy purchased by Sam Rayburn Municipal Power Agency (SRMPA) from the Southwestern Power Administration (Southwestern) under the terms and conditions of the Power Sales Contract dated June 28, 1985, as amended, for the sale of all Hydro Power and Energy generated at the Robert Douglas Willis Hydropower Project (Robert D. Willis) (formerly designated as Town Bluff).

Character and Conditions of Service:

Three-phase, alternating current, delivered at approximately 60 Hertz, at the nominal voltage, at the point of delivery, and in such quantities as are specified by contract.

1. Wholesale Rates, Terms, and Conditions for Hydro Power and Energy

1.1. These rates shall be applicable regardless of the quantity of Hydro Power and Energy available or delivered to SRMPA; *provided, however*, that if an Uncontrollable Force prevents utilization of both of the project's power generating units for an entire billing period, and if during such billing period water releases were being made which otherwise would have been used to generate Hydro Power and Energy,

[1] Supersedes Rate Schedule RDW-13

** Extended through September 30, 2021, by approval of Rate Order No. SWPA-76 by the Assistant Secretary for Electricity.

then Southwestern shall, upon request by SRMPA, suspend billing for subsequent billing periods, until such time as at least one of the project's generating units is again available.

1.2. The term ''Uncontrollable Force,'' as used herein, shall mean any force which is not within the control of the party affected, including, but not limited to, failure of water supply, failure of facilities, flood, earthquake, storm, lightning, fire, epidemic, riot, civil disturbance, labor disturbance, sabotage, war, acts of war, terrorist acts, or restraint by court of general jurisdiction, which by exercise of due diligence and foresight such party could not reasonably have been expected to avoid.

1.3. **Hydro Power Rates, Terms, and Conditions**

1.3.1. Monthly Charge for the Period of January 1, 2016 through December 31, 2016

$102,681 per month ($1,232,166 per year) for Robert D. Willis Hydro Power and Energy purchased by SRMPA from January 1, 2016, through December 31, 2016.

1.3.2. Monthly Charge for the Period of January 1, 2017 through December 31, 2021

$106,903 per month ($1,282,836 per year) for Robert D. Willis Hydro Power and Energy purchased by SRMPA from January 1, 2017, through September 30, 2021.

[FR Doc. 2019–21042 Filed 9–27–19; 8:45 am]

BILLING CODE 6450–01–P

ENVIRONMENTAL PROTECTION AGENCY

[FRL–10000–46–OA]

Notification of a Public Teleconference and Public Meeting of the Chartered Clean Air Scientific Advisory Committee (CASAC)

AGENCY: Environmental Protection Agency (EPA).

ACTION: Notice.

SUMMARY: The EPA Science Advisory Board (SAB) Staff Office announces two meetings of the Chartered Clean Air Scientific Advisory Committee (CASAC). A public teleconference will be held to receive public comments for the CASAC to consider in their peer review of EPA's *Policy Assessment for the Review of the National Ambient Air Quality Standards for Particulate Matter (External Review Draft—September 2019).* A face-to-face meeting will be held to conduct the peer review of EPA's *Policy Assessment for the Review of the National Ambient Air Quality Standards for Particulate Matter (External Review Draft—September 2019).*

DATES: The public teleconference will be held on Tuesday, October 22, 2019, from 12:00 p.m. to 4:00 p.m. (Eastern Time). The Chartered CASAC public face-to-face meeting will be held on Thursday, October 24, 2019, from 9:00 a.m. to 5:00 p.m. (Eastern Time) and Friday, October 25, 2019 from 8:30 a.m. to 5:00 p.m. (Eastern Time).

ADDRESSES: The public teleconference will be conducted by telephone only. The public face-to-face meeting will be held at the Embassy Suites by Hilton Raleigh Durham Research Triangle, 201 Harrison Oaks Boulevard, Cary, North Carolina, 27513.

FOR FURTHER INFORMATION CONTACT: Any member of the public wishing to obtain information concerning these public meetings may contact Mr. Aaron Yeow, Designated Federal Officer (DFO), at (202) 564–2050 or at *yeow.aaron@epa.gov.* General information about the CASAC, as well as any updates concerning the meetings announced in this notice, may be found on the CASAC website at *http://www.epa.gov/casac.*

SUPPLEMENTARY INFORMATION:

Background: The Clean Air Scientific Advisory Committee (CASAC) was established under section 109(d)(2) of the Clean Air Act (CAA or Act) (42 U.S.C. 7409) as an independent scientific advisory committee. The CASAC provides advice, information and recommendations on the scientific and technical aspects of air quality criteria and the National Ambient Air Quality Standards (NAAQS). The CASAC shall also: Advise the EPA Administrator of areas in which additional knowledge is required to appraise the adequacy and basis of existing, new, or revised NAAQS; describe the research efforts necessary to provide the required information; advise the EPA Administrator on the relative contribution to air pollution concentrations of natural as well as anthropogenic activity; and advise the EPA Administrator of any adverse public health, welfare, social, economic, or energy effects which may result from various strategies for attainment and maintenance of such NAAQS. The CAA requires that the Agency, at five-year intervals, review and revise, as appropriate, the air quality criteria and the NAAQS for the six ''criteria'' air pollutants, including particulate matter. EPA is currently reviewing the NAAQS for particulate matter.

The CASAC is a Federal Advisory Committee chartered under the Federal Advisory Committee Act (FACA), 5 U.S.C., App. 2. The Chartered CASAC will comply with the provisions of FACA and all appropriate SAB Staff Office procedural policies. Pursuant to FACA and EPA policy, notice is hereby given that the Chartered CASAC will hold a public teleconference and a public face-to-face meeting. The purpose of the teleconference will be for the Chartered CASAC to receive public comments for their consideration in their peer review of EPA's *Policy Assessment for the Review of the National Ambient Air Quality Standards for Particulate Matter (External Review Draft—September 2019).* The purpose of the face-to-face meeting is to conduct a peer review of EPA's *Policy Assessment for the Review of the National Ambient Air Quality Standards for Particulate Matter (External Review Draft—September 2019).*

Technical Contacts: Any technical questions concerning the *Policy Assessment for the Review of the National Ambient Air Quality Standards for Particulate Matter (External Review Draft—September 2019)* should be directed to Dr. Scott Jenkins (*jenkins.scott@epa.gov*).

Availability of Meeting Materials: Prior to the meeting, the review documents, agenda and other materials will be accessible through the calendar link on the blue navigation bar at *http://www.epa.gov/casac/.*

Procedures for Providing Public Input: Public comment for consideration by EPA's federal advisory committees and panels has a different purpose from public comment provided to EPA program offices. Therefore, the process for submitting comments to a federal advisory committee is different from the process used to submit comments to an EPA program office. Federal advisory committees and panels, including scientific advisory committees, provide independent advice to EPA. Members of the public can submit relevant comments on the topic of this advisory activity, including the charge to the CASAC and the EPA review documents, and/or the group conducting the activity, for the CASAC to consider as it develops advice for EPA. Input from the public to the CASAC will have the most impact if it provides specific scientific or technical information or analysis for CASAC to consider or if it relates to the clarity or accuracy of the technical information. Members of the public wishing to provide comment

should follow the instructions below to submit comments.

Oral Statements: Individuals or groups requesting an oral presentation during the October 22, 2019, teleconference will be limited to five minutes. Each person making an oral statement should consider providing written comments as well as their oral statement so that the points presented orally can be expanded upon in writing. Interested parties should contact Mr. Aaron Yeow, DFO, in writing (preferably via email) at the contact information noted above by October 15, 2019, to be placed on the list of public speakers.

Written Statements: Written statements will be accepted throughout the advisory process; however, for timely consideration by CASAC members, statements should be supplied to the DFO (preferably via email) at the contact information noted above by October 15, 2019. It is the SAB Staff Office general policy to post written comments on the web page for the advisory meeting or teleconference. Submitters are requested to provide an unsigned version of each document because the SAB Staff Office does not publish documents with signatures on its websites. Members of the public should be aware that their personal contact information, if included in any written comments, may be posted to the CASAC website. Copyrighted material will not be posted without explicit permission of the copyright holder.

Accessibility: For information on access or services for individuals with disabilities, please contact Mr. Aaron Yeow at (202) 564–2050 or *yeow.aaron@epa.gov.* To request accommodation of a disability, please contact Mr. Yeow preferably at least ten days prior to each meeting to give EPA as much time as possible to process your request.

Dated: September 17, 2019.

Thomas H. Brennan,

Director, EPA Science Advisory Staff Office.

[FR Doc. 2019–21199 Filed 9–27–19; 8:45 am]

BILLING CODE 6560–50–P

ENVIRONMENTAL PROTECTION AGENCY

[EPA–HQ–OPP–2019–0045; FRL–9999–90]

Pesticide Product Registration; Receipt of Applications for New Uses (August 2019)

AGENCY: Environmental Protection Agency (EPA).

ACTION: Notice.

SUMMARY: EPA has received applications to register new uses for pesticide products containing currently registered active ingredients. Pursuant to the Federal Insecticide, Fungicide, and Rodenticide Act (FIFRA), EPA is hereby providing notice of receipt and opportunity to comment on these applications.

DATES: Comments must be received on or before October 30, 2019.

ADDRESSES: Submit your comments, identified by the docket identification (ID) number and the File Symbol of the EPA registration Number of interests as shown in the body of this document, by one of the following methods:

- *Federal eRulemaking Portal: http://www.regulations.gov.* Follow the online instructions for submitting comments. Do not submit electronically any information you consider to be Confidential Business Information (CBI) or other information whose disclosure is restricted by statute.
- *Mail:* OPP Docket, Environmental Protection Agency Docket Center (EPA/DC), (28221T), 1200 Pennsylvania Ave. NW, Washington, DC 20460–0001.
- *Hand Delivery:* To make special arrangements for hand delivery or delivery of boxed information, please follow the instructions at *https://www.epa.gov/dockets/where-send-comments-epa-dockets.*

Additional instructions on commenting or visiting the docket, along with more information about dockets generally, is available at *https://www.epa.gov/dockets/about-epa-dockets.*

FOR FURTHER INFORMATION CONTACT: Michael Goodis, Registration Division (7505P), main telephone number: (703) 305–7090, email address: *RDFRNotices@epa.gov.* Anita Pease, Antimicrobials Division (7510P), main telephone number: (703) 305–7090; email address: *ADFRNotices@epa.gov.* The mailing address for each contact person is: Office of Pesticide Programs, Environmental Protection Agency, 1200 Pennsylvania Ave. NW, Washington, DC 20460–0001.

The mailing address for each contact person is: Office of Pesticide Programs, Environmental Protection Agency, 1200 Pennsylvania Ave. NW, Washington, DC 20460–0001. As part of the mailing address, include the contact person's name, division, and mail code. The division to contact is listed at the end of each application summary.

SUPPLEMENTARY INFORMATION:

I. General Information

A. Does this action apply to me?

You may be potentially affected by this action if you are an agricultural producer, food manufacturer, or pesticide manufacturer. The following list of North American Industrial Classification System (NAICS) codes is not intended to be exhaustive, but rather provides a guide to help readers determine whether this document applies to them. Potentially affected entities may include:

- Crop production (NAICS code 111).
- Animal production (NAICS code 112).
- Food manufacturing (NAICS code 311).

B. What should I consider as I prepare my comments for EPA?

1. *Submitting CBI.* Do not submit this information to EPA through *regulations.gov* or email. Clearly mark the part or all of the information that you claim to be CBI. For CBI information in a disk or CD–ROM that you mail to EPA, mark the outside of the disk or CD–ROM as CBI and then identify electronically within the disk or CD–ROM the specific information that is claimed as CBI. In addition to one complete version of the comment that includes information claimed as CBI, a copy of the comment that does not contain the information claimed as CBI must be submitted for inclusion in the public docket. Information so marked will not be disclosed except in accordance with procedures set forth in 40 CFR part 2.

2. *Tips for preparing your comments.* When preparing and submitting your comments, see the commenting tips at *https://www.epa.gov/dockets/commenting-epa-dockets.*

II. Registration Applications

EPA has received applications to register new uses for pesticide products containing currently registered active ingredients. Pursuant to the provisions of FIFRA section 3(c)(4) (7 U.S.C. 136a(c)(4)), EPA is hereby providing notice of receipt and opportunity to comment on these applications. Notice of receipt of these applications does not imply a decision by the Agency on these applications.

New Uses

1. *File Symbol:* 90635–E. *Docket ID number:* EPA–HQ–OPP–2019–0514. *Applicant:* Next Science, LLC, 10550 Deerwood Park Boulevard, Suite 300, Jacksonville, FL 32256. *Active ingredient:* Sodium Lauryl Sulfate and Acetic Acid. *Product type:* Antimicrobial. *Proposed use:* Removes Biofilm. *Contact:* AD.

2. *EPA Registration Numbers:* 264–1143, 264–1141. *Docket ID Number:* EPA–HQ–OPP–2019–0460. *Applicant:*

The Interregional Research Project (IR–4), Rutgers, The State University of New Jersey, 500 College Road East, Suite 201 W, Princeton, NJ 08540. *Active ingredient:* Flupyradifurone. *Product type:* Insecticide. *Proposed Use:* Stalk and stem vegetable subgroup 22A, except prickly pear, pads and prickly pear, Texas pads; sesame, seed; sunflower subgroup 20B; coffee, green bean; tropical and subtropical, palm fruit, edible peel, subgroup 23C; sorghum, sweet; pineapple; grass, forage, fodder and hay, group 17; tropical and subtropical, inedible peel, cactus, subgroup 24D. *Contact:* RD.

3. *EPA Registration Number:* 7969–56. *Docket ID number:* EPA–HQ–OPP–2019–0461. *Applicant:* BASF Corporation, 26 Davis Drive PO Box 13528 Research Triangle Park, NC 27709–3528. *Active ingredient:* Sethoxydim. *Product type:* Herbicide. *Proposed use:* Basil. *Contact:* RD.

Authority: 7 U.S.C. 136 *et seq.*

Dated: September 16, 2019.

Delores Barber,

Director, Information Technology and Resources Management Division, Office of Pesticide Programs.

[FR Doc. 2019–21119 Filed 9–27–19; 8:45 am]

BILLING CODE 6560–50–P

ENVIRONMENTAL PROTECTION AGENCY

[EPA–HQ–OPP–2017–0693; FRL–9996–49]

Final Test Guideline; Series 810—Product Performance Test Guideline; Notice of Availability

AGENCY: Environmental Protection Agency (EPA).

ACTION: Notice.

SUMMARY: EPA is announcing the availability of the final product performance test guideline for premises treatments. This test guideline is part of a series of test guidelines established by the Office of Chemical Safety and Pollution Prevention (OCSPP) for use in testing pesticides and chemical substances. The test guidelines serve as a compendium of accepted scientific methodologies and protocols for testing that are intended to provide data to inform regulatory decisions. This test guideline, which is identified as OCSPP Test Guideline 810.3500, provides guidance for conducting a study to determine pesticide product performance against invertebrate pests of premises and is used by EPA, the public, and companies that submit data to EPA.

FOR FURTHER INFORMATION CONTACT: Michael L. Goodis, Registration Division (7505P), Office of Pesticide Programs, Environmental Protection Agency, 1200 Pennsylvania Ave. NW, Washington, DC 20460–0001; telephone number: (703) 305–7090; email address: *RDFRNotices@epa.gov.*

SUPPLEMENTARY INFORMATION:

I. Introduction

EPA is announcing the availability of a final test guideline, OCSPP Test Guideline 810.3500: Premises Treatments.

This test guideline is part of a series of test guidelines established by OCSPP for use in testing pesticides and chemical substances to develop data for submission to the Agency under the Federal Food, Drug, and Cosmetic Act (FFDCA) section 408 (21 U.S.C. 346a), the Federal Insecticide, Fungicide, and Rodenticide Act (FIFRA) (7 U.S.C. 136 *et seq.*), and the Toxic Substances Control Act (TSCA) (15 U.S.C. 2601 *et seq.*). The test guidelines serve as a compendium of accepted scientific methodologies and protocols that are intended to provide data to inform regulatory decisions under TSCA, FIFRA, and/or FFDCA.

The test guidelines are used by EPA, the public, and companies that are subject to data submission requirements under TSCA, FIFRA, and/or FFDCA. As guidance documents, the test guidelines are not binding on either EPA or any outside parties, and EPA may depart from the test guidelines where circumstances warrant and without prior notice. At places in this guidance, the Agency uses the word ''should.'' In this guidance, use of ''should'' with regard to an action means that the action is recommended rather than mandatory. The procedures contained in the test guidelines are recommended for generating the data that are the subject of the test guideline, but EPA recognizes that departures may be appropriate in specific situations. You may propose alternatives to the recommendations described in the test guidelines, and the Agency will assess them for appropriateness on a case-by-case basis.

II. General Information

A. Does this action apply to me?

This action is directed to the public in general. Although this action may be of particular interest to those persons who are or may be required to conduct testing of pesticides and chemical substances for submission to EPA under TSCA, FIFRA, and/or FFDCA, the Agency has not attempted to describe all the specific entities that may be affected by this action.

B. How can I get copies of this document and other related information?

1. *Docket for this document.* The docket for this action, identified by docket identification (ID) number EPA–HQ–OPP–2017–0693, is available at *http://www.regulations.gov* or at the Office of Pesticide Programs Regulatory Public Docket (OPP Docket) in the Environmental Protection Agency Docket Center (EPA/DC), West William Jefferson Clinton Bldg., Rm. 3334, 1301 Constitution Ave. NW, Washington, DC 20460–0001. The Public Reading Room is open from 8:30 a.m. to 4:30 p.m., Monday through Friday, excluding legal holidays. The telephone number for the Public Reading Room is (202) 566–1744, and the telephone number for the OPP Docket is (703) 305–5805. Please review the visitor instructions and additional information about the docket available at *http://www.epa.gov/dockets.*

2. *Electronic access to the OCSPP test guidelines.* To access OCSPP test guidelines electronically, please go to *http://www.epa.gov/ocspp/pubs/frs/home/testmeth.htm.* You may also access the test guidelines in *http://www.regulations.gov,* grouped by series under docket ID numbers: EPA–HQ–OPPT–2009–0150 through EPA–HQ–OPPT–2009–0159 and EPA–HQ–OPPT–2009–0576.

III. Overview

A. What action is EPA taking?

EPA is announcing the availability of a final test guideline under Series 810.3500 entitled ''Premises Treatments'' and identified as OCSPP Test Guideline 810.3500. This revised guideline replaces the original version published in 1998. The guideline provides recommendations for the design and execution of laboratory studies to evaluate the performance of pesticide products intended to kill, control, flush, and/or knock down invertebrate pests of premises, such as cockroaches, ticks, mosquitoes, flies, and wasps in connection with registration of pesticide products under the FIFRA (7 U.S.C. 136, *et seq.*). It does not apply to efficacy testing for treatment of livestock or pets, wide-area mosquito control, structural protection from termites, or bed bug products.

B. How was this final test guideline developed?

EPA-registered pesticide products are an important part of pest management programs for pests of premises. The Agency developed the product

performance test guidelines to standardize the approaches to testing methods to ensure the quality and validity of the efficacy data for these types of products. The Agency attended entomology conferences, consulted with leading academics, and reviewed peer-reviewed scientific journal articles on topics related to the guideline to draft the original document. Further, EPA sought advice and recommendations from the FIFRA Scientific Advisory Panel (SAP) and the public. The SAP meeting, held on May 8–10, 2018, was announced in the **Federal Register** issue of January 26, 2018 (83 FR 3704) (FRL–9972–65). This guideline has been revised based on comments from the SAP and the public. The revisions include clarifying bait product testing, offering more flexibility in testing design, updating the replication recommendations based on statistical modeling and ease of obtaining pests, and refining the statistical analyses recommendations. The Agency is also making available in the docket a Response to Comments document that addresses issue raised in the public comment submission.

Authority: 7 U.S.C. 136 *et seq.;* 15 U.S.C. 2601 *et seq.;* 21 U.S.C. 301 *et seq.*

Dated: September 24, 2019.

Alexandra Dapolito Dunn,

Assistant Administrator, Office of Chemical Safety and Pollution Prevention.

[FR Doc. 2019–21043 Filed 9–27–19; 8:45 am]

BILLING CODE 6560–50–P

ENVIRONMENTAL PROTECTION AGENCY

[EPA–HQ–OA–2019–0370; FRL–9047–2]

Proposed Information Collection Request; Comment Request; Final Rule at 40 CFR Part 8: Environmental Impact Assessment of Nongovernmental Activities in Antarctica (Renewal)

AGENCY: Environmental Protection Agency (EPA).

ACTION: Notice.

SUMMARY: The Environmental Protection Agency is planning to submit an information collection request (ICR), ''Final Rule at 40 CFR part 8: Environmental Impact Assessment of Nongovernmental Activities in Antarctica'' (EPA ICR No. 1808.09, OMB Control No. 2020–0007) to the Office of Management and Budget (OMB) for review and approval in accordance with the Paperwork Reduction Act. Before doing so, the EPA is soliciting public comments on specific aspects of the proposed information collection as described below. This is a proposed extension of the ICR, which is currently approved through May 31, 2020. An Agency may not conduct, or sponsor and a person is not required to respond to a collection of information unless it displays a currently valid OMB control number.

DATES: Comments must be submitted on or before Friday, November 29, 2019.

ADDRESSES: Submit your comments, referencing Docket ID No. EPA–HQ–OA–2019–0370 online using *www.regulations.gov* (our preferred method) or by mail to: EPA Docket Center, Environmental Protection Agency, Mail Code 28221T, 1200 Pennsylvania Ave. NW, Washington, DC 20460.

The EPA's policy is that all comments received will be included in the public docket without change including any personal information provided, unless the comment includes profanity, threats, information claimed to be Confidential Business Information or other information whose disclosure is restricted by statute.

FOR FURTHER INFORMATION CONTACT: Julie Roemele, NEPA Compliance Division, Office of Federal Activities, Mail Code 2203A, Environmental Protection Agency, 1200 Pennsylvania Ave. NW, Washington, DC 20460; telephone number: 202–564–5632; fax number: 202–564–0070; email address: *roemele.julie@epa.gov.*

SUPPLEMENTARY INFORMATION: Supporting documents which explain in detail the information that the EPA will be collecting are available in the public docket for this ICR. The docket can be viewed online at *www.regulations.gov* or in person at the EPA Docket Center, WJC West, Room 3334, 1301 Constitution Ave. NW, Washington, DC. The telephone number for the Docket Center is 202–566–1744. For additional information about EPA's public docket, visit *http://www.epa.gov/dockets.*

Pursuant to section 3506(c)(2)(A) of the PRA, the EPA is soliciting comments and information to enable it to: (i) Evaluate whether the proposed collection of information is necessary for the proper performance of the functions of the Agency, including whether the information will have practical utility; (ii) evaluate the accuracy of the Agency's estimate of the burden of the proposed collection of information, including the validity of the methodology and assumptions used; (iii) enhance the quality, utility, and clarity of the information to be collected; and (iv) minimize the burden of the collection of information on those who are to respond, including through the use of appropriate automated electronic, mechanical, or other technological collection techniques or other forms of information technology, *e.g.,* permitting electronic submission of responses. The EPA will consider the comments received and amend the ICR as appropriate. The final ICR package will then be submitted to OMB for review and approval. At that time, the EPA will issue another **Federal Register** notice to announce the submission of the ICR to OMB and the opportunity to submit additional comments to OMB.

Abstract: The EPA's regulations at 40 CFR part 8, Environmental Impact Assessment of Nongovernmental Activities in Antarctica (Rule), were promulgated pursuant to the Antarctic Science, Tourism, and Conservation Act of 1996 (Act), 16 U.S.C. 2401 *et seq.,* as amended, 16 U.S.C. 2403a, which implements the Protocol on Environmental Protection (Protocol) to the Antarctic Treaty of 1959 (Treaty). The Rule provides for assessment of the environmental impacts of nongovernmental activities in Antarctica, including tourism, for which the United States is required to give advance notice under Paragraph 5 of Article VII of the Treaty, and for coordination of the review of information regarding environmental impact assessments received from other Parties under the Protocol. The requirements of the Rule apply to operators of nongovernmental expeditions organized or proceeding from the territory of the United States to Antarctica and include commercial and non-commercial expeditions. Expeditions may include ship-based tours; yacht, skiing or mountaineering expeditions; privately funded research expeditions; and other nongovernmental activities. The Rule does not apply to individual U.S. citizens or groups of citizens planning travel to Antarctica on an expedition for which they are not acting as an operator. (Operators, for example, typically acquire use of vessels or aircraft, hire expedition staff, plan itineraries, and undertake other organizational responsibilities.) The rule provides nongovernmental operators with the specific requirements they need to meet in order to comply with the requirements of Article 8 and Annex I to the Protocol. The provisions of the Rule are intended to ensure that potential environmental effects of nongovernmental activities undertaken in Antarctica are appropriately identified and considered by the operator during the planning process and that to the extent practicable

appropriate environmental safeguards which would mitigate or prevent adverse impacts on the Antarctic environment are identified by the operator.

Environmental Documentation. Persons subject to the Rule must prepare environmental documentation to support the operator's determination regarding the level of environmental impact of the proposed expedition. Environmental documentation includes a Preliminary Environmental Review Memorandum (PERM), an Initial Environmental Evaluation (IEE), or a Comprehensive Environmental Evaluation (CEE). The environmental document is submitted to the Office of Federal Activities (OFA). If the operator determines that an expedition may have: (1) Less than a minor or transitory impact, a PERM needs to be submitted no later than 180 days before the proposed departure to Antarctica; (2) no more than minor or transitory impacts, an IEE needs to be submitted no later than 90 days before the proposed departure; or (3) more than minor or transitory impacts, a CEE needs to be submitted. Operators who anticipate such activities are encouraged to consult with EPA as soon as possible regarding the date for submittal of the CEE. (Article 3(4), of Annex I of the Protocol requires that draft CEEs be distributed to all Parties and the Committee for Environmental Protection 120 days in advance of the next Antarctic Treaty Consultative Meeting at which the CEE may be addressed.)

The Protocol and the Rule also require an operator to employ procedures to assess and provide a regular and verifiable record of the actual impacts of an activity which proceeds on the basis of an IEE or CEE. The record developed through these measures needs to be designed to: (a) Enable assessments to be made of the extent to which environmental impacts of nongovernmental expeditions are consistent with the Protocol; and (b) provide information useful for minimizing and mitigating those impacts and, where appropriate, on the need for suspension, cancellation, or modification of the activity. Moreover, an operator needs to monitor key environmental indicators for an activity proceeding based on a CEE. An operator may also need to carry out monitoring in order to assess and verify the impact of an activity for which an IEE would be prepared. For activities that require an IEE, an operator should be able to use procedures currently being voluntarily utilized by operators to provide the required information. Should an activity require a CEE, the operator should consult with the EPA to: (a) Identify the monitoring regime appropriate to that activity, and (b) determine whether and how the operator might utilize relevant monitoring data collected by the U.S. Antarctic Program. OFA would consult with the National Science Foundation and other interested Federal agencies regarding the monitoring regime.

In cases of emergency related to the safety of human life or of ships, aircraft, equipment and facilities of high value, or the protection of the environment which would require an activity to be undertaken without completion of the documentation procedures set out in the Rule, the operator would need to notify the Department of State within 15 days of any activities which would have otherwise required preparation of a CEE, and provide a full explanation of the activities carried out within 45 days of those activities. (During the time the Interim Final and Final Rules have been in effect, there were no emergencies requiring notification by U.S. operators. An Interim Final Rule was in effect from April 30, 1997, until replaced on December 6, 2001, by the Final Rule).

Environmental documents (*e.g.,* PERM, IEE, CEE) are submitted to OFA. Environmental documents are reviewed by OFA, in consultation with the National Science Foundation and other interested Federal agencies and made available to other Parties and the public as required under the Protocol or otherwise requested. OFA notifies the public of document availability via the World Wide Web at: *https://www.epa.gov/international-cooperation/receipt-environmental-impact-assessments-eias-regarding-nongovernmental.*

The types of nongovernmental activities currently being carried out (*e.g.,* ship-based tours, land-based tours, flights, and privately funded research expeditions) are typically unlikely to have impacts that are more than minor or transitory, thus an IEE is the typical level of environmental documentation submitted. For the 1997–1998 through 2018–2019 austral summer seasons during the time the Rule has been in effect, all respondents submitted IEEs except for three PERMs. Paperwork reduction provisions in the Rule that are used by the operators include: (a) Incorporation of material in the environmental document by referring to it in the IEE, (b) inclusion of all proposed expeditions by one operator within one IEE; (c) use of one IEE to address expeditions being carried out by more than one operator; and (d) use of multi-year environmental documentation to address proposed expeditions for a period of up to five consecutive austral summer seasons.

Coordination of Review of Information Received From Other Parties to the Treaty. The Rule also provides for the coordination of review of information received from other Parties and the public availability of that information including: (1) A description of national procedures for considering the environmental impacts of proposed activities; (2) an annual list of any IEEs and any decisions taken in consequence thereof; (3) significant information obtained and any action taken in consequence thereof with regard to monitoring from IEEs to CEEs; and (4) information in a final CEE. This provision fulfills the United States' obligation to meet the requirements of Article 6 of Annex I to the Protocol. The Department of State is responsible for coordination of these reviews of drafts with interested Federal agencies, and for public availability of documents and information. This portion of the Rule does not impose paperwork requirements on any nongovernmental person subject to U.S. regulation.

Form Numbers: None.

Respondents/affected entities: Entities potentially affected by this action are all nongovernmental operators with activities in Antarctica, including tour operators, for which the United States is required to give advance notice under paragraph 5 of Article VII of the Antarctic Treaty of 1959; this includes all nongovernmental expeditions to and within Antarctica organized in or proceeding from the territory of the United States.

Respondent's obligation to respond: Mandatory (40 CFR part 8).

Estimated number of respondents: 25 (total).

Frequency of response: Annual.

Total estimated burden: 1,544 hours (per year). Burden is defined at 5 CFR 1320.03(b).

Total estimated cost: $133,780 (per year), includes $0 annualized capital or operation & maintenance costs.

Changes in Estimates: There is an increase of 330 hours in the total estimated respondent burden compared with the ICR currently approved by OMB. This increase is the result of a change to the number of operators that the EPA anticipates will submit environmental documentation as well as the inclusion of a potential PERM, CEE and Emergency Report submitted by every three years.

Dated: September 24, 2019.

Robert Tomiak,

Director, Office of Federal Activities.

[FR Doc. 2019–21112 Filed 9–27–19; 8:45 am]

BILLING CODE 6560–50–P

ENVIRONMENTAL PROTECTION AGENCY

[EPA–HQ–OPP–2017–0720; FRL–9997–21]

Registration Review; Draft Human Health and/or Ecological Risk Assessments for Several Pesticides; Notice of Availability

AGENCY: Environmental Protection Agency (EPA).

ACTION: Notice.

SUMMARY: This notice announces the availability of EPA's draft human health and/or ecological risk assessments for the registration review of alkylbenzene sulfonates, cyproconazole, etoxazole, fenamidone, fenbutatin-oxide, fluazifop-p-butyl, flumetralin, MCPB and salts, mecoprop (MCPP-p), oxyfluorfen, pinoxaden, pyraclostrobin, and pyraflufen-ethyl.

DATES: Comments must be received on or before November 29, 2019.

ADDRESSES: Submit your comments, to the docket identification (ID) number for the specific pesticide of interest provided in the Table in Unit IV., by one of the following methods:

- *Federal eRulemaking Portal: http://www.regulations.gov.* Follow the online instructions for submitting comments. Do not submit electronically any information you consider to be Confidential Business Information (CBI) or other information whose disclosure is restricted by statute.
- *Mail:* OPP Docket, Environmental Protection Agency Docket Center (EPA/DC), (28221T), 1200 Pennsylvania Ave. NW, Washington, DC 20460–0001.
- *Hand Delivery:* To make special arrangements for hand delivery or delivery of boxed information, please follow the instructions at *http://www.epa.gov/dockets/contacts.html.*

Additional instructions on commenting or visiting the docket, along with more information about dockets generally, are available at *http://www.epa.gov/dockets.*

FOR FURTHER INFORMATION CONTACT: *For pesticide specific information contact:* The Chemical Review Manager for the pesticide of interest identified in the Table in Unit IV.

For general questions on the registration review program, contact: Melanie Biscoe, Pesticide Re-Evaluation Division (7508P), Office of Pesticide Programs, Environmental Protection Agency, 1200 Pennsylvania Ave. NW, Washington, DC 20460–0001; telephone number: (703) 305–7106; email address: *biscoe.melanie@epa.gov.*

SUPPLEMENTARY INFORMATION:

I. General Information

A. Does this action apply to me?

This action is directed to the public in general and may be of interest to a wide range of stakeholders including environmental, human health, farm worker, and agricultural advocates; the chemical industry; pesticide users; and members of the public interested in the sale, distribution, or use of pesticides. Since others also may be interested, the Agency has not attempted to describe all the specific entities that may be affected by this action. If you have any questions regarding the applicability of this action to a particular entity, consult the Chemical Review Manager identified in the Table in Unit IV.

B. What should I consider as I prepare my comments for EPA?

1. *Submitting CBI.* Do not submit this information to EPA through *regulations.gov* or email. Clearly mark the part or all of the information that you claim to be CBI. For CBI information in a disk or CD–ROM that you mail to EPA, mark the outside of the disk or CD–ROM as CBI and then identify electronically within the disk or CD–ROM the specific information that is claimed as CBI. In addition to one complete version of the comment that includes information claimed as CBI, a copy of the comment that does not contain the information claimed as CBI must be submitted for inclusion in the public docket. Information so marked will not be disclosed except in accordance with procedures set forth in 40 CFR part 2.

2. *Tips for preparing your comments.* When preparing and submitting your comments, see the commenting tips at *http://www.epa.gov/dockets/comments.html.*

3. *Environmental justice.* EPA seeks to achieve environmental justice, the fair treatment and meaningful involvement of any group, including minority and/or low income populations, in the development, implementation, and enforcement of environmental laws, regulations, and policies. To help address potential environmental justice issues, the Agency seeks information on any groups or segments of the population who, as a result of their location, cultural practices, or other factors, may have atypical or disproportionately high and adverse human health impacts or environmental effects from exposure to the pesticides discussed in this document, compared to the general population.

II. Background

Registration review is EPA's periodic review of pesticide registrations to ensure that each pesticide continues to satisfy the statutory standard for registration, that is, the pesticide can perform its intended function without unreasonable adverse effects on human health or the environment. As part of the registration review process, the Agency has completed comprehensive draft human health and/or ecological risk assessments for all pesticides listed in the Table in Unit IV. After reviewing comments received during the public comment period, EPA may issue a revised risk assessment, explain any changes to the draft risk assessment, and respond to comments and may request public input on risk mitigation before completing a proposed registration review decision for the pesticides listed in the Table in Unit IV. Through this program, EPA is ensuring that each pesticide's registration is based on current scientific and other knowledge, including its effects on human health and the environment.

III. Authority

EPA is conducting its registration review of the chemicals listed in the Table in Unit IV pursuant to section 3(g) of the Federal Insecticide, Fungicide, and Rodenticide Act (FIFRA) and the Procedural Regulations for Registration Review at 40 CFR part 155, subpart C. FIFRA section 3(g) provides, among other things, that the registrations of pesticides are to be reviewed every 15 years. Under FIFRA, a pesticide product may be registered or remain registered only if it meets the statutory standard for registration given in FIFRA section 3(c)(5) (7 U.S.C. 136a(c)(5)). When used in accordance with widespread and commonly recognized practice, the pesticide product must perform its intended function without unreasonable adverse effects on the environment; that is, without any unreasonable risk to man or the environment, or a human dietary risk from residues that result from the use of a pesticide in or on food.

IV. What action is the Agency taking?

Pursuant to 40 CFR 155.58, this notice announces the availability of EPA's human health and/or ecological risk assessments for the pesticides shown in the following table and opens a 60-day public comment period on the risk assessments.

TABLE—DRAFT RISK ASSESSMENTS BEING MADE AVAILABLE FOR PUBLIC COMMENT

Registration review case name and No.	Docket ID No.	Chemical review manager and contact information
Alkylbenzene Sulfonates, Case 4006	EPA–HQ–OPP–2013–0097	Erin Dandridge, *dandridge.erin@epa.gov*, 703–347–0185.
Cyproconazole, Case 7011	EPA–HQ–OPP–2015–0462	Carolyn Smith, *smith.carolyn@epa.gov*, 703–347–8325.
Etoxazole, Case 7616	EPA–HQ–OPP–2014–0133	Rachel Fletcher, *fletcher.rachel@epa.gov*, 703–347–0512.
Fenamidone, Case 7033	EPA–HQ–OPP–2014–0048	Christina Scheltema, *scheltema.christina@epa.gov*, 703–308–2201.
Fenbutatin-oxide, Case 0245	EPA–HQ–OPP–2009–0841	Moana Appleyard, *appleyard.moana@epa.gov*, 703–308–8175.
Fluazifop-p-butyl, Case 2285	EPA–HQ–OPP–2014–0779	Jonathan Williams, *williams.jonathanr@epa.gov*, 703–347–0670.
Flumetralin, Case 4119	EPA–HQ–OPP–2015–0076	Katherine St. Clair, *stclair.katherine@epa.gov*, 703–347–8778.
MCPB and salts, Case 2365	EPA–HQ–OPP–2014–0181	Steven R. Peterson, *peterson.stevenr@epa.gov*, 703–347–0755.
Mecoprop (MCPP-p), Case 0377	EPA–HQ–OPP–2014–0361	Nathan Sell, *sell.nathan@epa.gov*, 703–347–8020.
Oxyfluorfen, Case 2490	EPA–HQ–OPP–2014–0778	Eric Fox, *fox.ericm@epa.gov*, 703–347–0104.
Pinoxaden, Case 7266	EPA–HQ–OPP–2015–0603	Linsey Walsh, *walsh.linsey@epa.gov*, 703–347–0588.
Pyraclostrobin, Case 7034	EPA–HQ–OPP–2014–0051	Tiffany Green, *green.tiffany@epag.gov*, 703–347–0314.
Pyraflufen-ethyl, Case 7259	EPA–HQ–OPP–2014–0415	Christina Scheltema, *scheltema.christina@epa.gov*, 703–308–2201.

Pursuant to 40 CFR 155.53(c), EPA is providing an opportunity, through this notice of availability, for interested parties to provide comments and input concerning the Agency's draft human health and/or ecological risk assessments for the pesticides listed in the Table in Unit IV. The Agency will consider all comments received during the public comment period and make changes, as appropriate, to a draft human health and/or ecological risk assessment. EPA may then issue a revised risk assessment, explain any changes to the draft risk assessment, and respond to comments.

Information submission requirements. Anyone may submit data or information in response to this document. To be considered during a pesticide's registration review, the submitted data or information must meet the following requirements:

- To ensure that EPA will consider data or information submitted, interested persons must submit the data or information during the comment period. The Agency may, at its discretion, consider data or information submitted at a later date.
- The data or information submitted must be presented in a legible and useable form. For example, an English translation must accompany any material that is not in English and a written transcript must accompany any information submitted as an audiographic or videographic record. Written material may be submitted in paper or electronic form.
- Submitters must clearly identify the source of any submitted data or information.
- Submitters may request the Agency to reconsider data or information that the Agency rejected in a previous review. However, submitters must explain why they believe the Agency should reconsider the data or information in the pesticide's registration review.

As provided in 40 CFR 155.58, the registration review docket for each pesticide case will remain publicly accessible through the duration of the registration review process; that is, until all actions required in the final decision on the registration review case have been completed.

Authority: 7 U.S.C. 136 *et seq.*

Dated: September 23, 2019.

Mary Reaves,

Acting Director, Pesticide Re-Evaluation Division, Office of Pesticide Programs.

[FR Doc. 2019–21118 Filed 9–27–19; 8:45 am]

BILLING CODE 6560–50–P

ENVIRONMENTAL PROTECTION AGENCY

[EPA–HQ–OPP–2018–0014; FRL–9999–39]

Cancellation Order for Certain Pesticide Registrations and Amendments To Terminate Uses

AGENCY: Environmental Protection Agency (EPA).

ACTION: Notice.

SUMMARY: This notice announces EPA's order for the cancellations and amendments to terminate uses, voluntarily requested by the registrants and accepted by the Agency, of the products listed in Table 1, Table 1A and Table 2 of Unit II, pursuant to the Federal Insecticide, Fungicide, and Rodenticide Act (FIFRA). This cancellation order follows a July 24, 2019 **Federal Register** Notice of Receipt of Requests from the registrants listed in Table 3 of Unit II to voluntarily cancel and amend to terminate uses of these product registrations. In the July 24, 2019 notice, EPA indicated that it would issue an order implementing the cancellations and amendments to terminate uses, unless the Agency received substantive comments within the 30-day comment period that would merit its further review of these requests, or unless the registrants withdrew their requests. The Agency did not receive any comments on the notice. Further, the registrants did not withdraw their requests. Accordingly, EPA hereby issues in this notice a cancellation order granting the requested cancellations and amendments to terminate uses. Any distribution, sale, or use of the products subject to this cancellation order is permitted only in accordance with the terms of this order, including any existing stocks provisions.

DATES: The cancellations and amendments are effective September 30, 2019.

FOR FURTHER INFORMATION CONTACT: Christopher Green, Information Technology and Resources Management Division (7502P), Office of Pesticide Programs, Environmental Protection Agency, 1200 Pennsylvania Ave. NW, Washington, DC 20460–0001; telephone number: (703) 347–0367; email address: *green.christopher@epa.gov.*

SUPPLEMENTARY INFORMATION:

I. General Information

A. Does this action apply to me?

This action is directed to the public in general and may be of interest to a wide range of stakeholders including environmental, human health, and agricultural advocates; the chemical industry; pesticide users; and members of the public interested in the sale, distribution, or use of pesticides. Since others also may be interested, the Agency has not attempted to describe all the specific entities that may be affected by this action.

B. How can I get copies of this document and other related information?

The docket for this action, identified by docket identification (ID) number EPA–HQ–OPP–2018–0014, is available at *http://www.regulations.gov* or at the Office of Pesticide Programs Regulatory Public Docket (OPP Docket) in the Environmental Protection Agency Docket Center (EPA/DC), West William Jefferson Clinton Bldg., Rm. 3334, 1301 Constitution Ave. NW, Washington, DC 20460–0001. The Public Reading Room is open from 8:30 a.m. to 4:30 p.m., Monday through Friday, excluding legal holidays. The telephone number for the Public Reading Room is (202) 566–1744, and the telephone number for the OPP Docket is (703) 305–5805. Please review the visitor instructions and additional information about the docket available at *http://www.epa.gov/dockets.*

II. What action is the agency taking?

This notice announces the cancellations and amendments to terminate uses, as requested by registrants, of products registered under FIFRA section 3 (7 U.S.C. 136a).

These registrations are listed in sequence by registration number in Table 1, Table 1A and Table 2 of this unit.

TABLE 1—PRODUCT CANCELLATIONS

Registration No.	Company No.	Product name	Active ingredients
352–761	352	Dupont DPX–QFU31 (MP) Herbicide	Dicamba, sodium salt & Rimsulfuron.
6836–177	6836	Lonza Formulation P–39	Pine oil & Alkyl* dimethyl benzyl ammonium chloride *(58%C14, 28%C16, 14%C12).
8660–161	8660	0.2% Barricade Crabgrass Control with Fertilizer.	Prodiamine.
8660–162	8660	0.3% Barricade Crabgrass Control with Fertilizer.	Prodiamine.
8660–163	8660	0.4% Barricade Crabgrass Control with Fertilizer.	Prodiamine.
8660–164	8660	Sta-Green Crabgrass Preventer	Prodiamine.
8660–200	8660	Koos Crabgrass Preventer with 0.223 Barricade Preemergence Herbicide.	Prodiamine.
8660–216	8660	Par EX Slow Release Fertilizer with .345 Barricade Herbicide.	Prodiamine.
8660–249	8660	Par EX Fertilizer Plus Crabgrass Preventer with 0.475% Barricade Preem.	Prodiamine.
9779–297	9779	Prometryne 4L Herbicide	Prometryn.
12455–107	12455	Tomcat Ant Killer	Indoxacarb.
12455–118	12455	Tomcat Ant Gel	Indoxacarb.
45728–29	45728	SDDC	Sodium dimethyldithiocarbamate.
59820–4	59820	Acarosan Moist Powder	Benylate.
64898–5	64898	Razorooter	Dichlobenil.
87290–44	87290	Willowood Azoxystrobin 2.08SC	Azoxystrobin.
87290–56	87290	Willowood Azoxyprop Xtra	Propiconazole & Azoxystrobin.
87290–60	87290	Willowood Tebustrobin SC	Tebuconazole & Azoxystrobin.
87290–63	87290	Willowood Pyrac 2SC	Pyraclostrobin.
87290–64	87290	Willowood Pyrac 2EC	Pyraclostrobin.
89966–2	89966	Azoxystrobin Technical	Azoxystrobin.
93051–1	93051	RightLine Pyrac 2 MEC	Pyraclostrobin.
93051–2	93051	RightLine Pyraprop MEC	Pyraclostrobin & Propiconazole.
93051–3	93051	RightLine CHILL LC	Pyraclostrobin.
93088–1	93088	Pyraclostrobin Technical	Pyraclostrobin.
AL–120005	69969	Avipel Liquid Corn Seed Treatment	Anthraquinone.
DE–170001	69969	Avipel Liquid Corn Seed Treatment	Anthraquinone.
IA–170003	69969	Avipel Liquid Corn Seed Treatment	Anthraquinone.
ID–130006	69969	Avipel Liquid Corn Seed Treatment	Anthraquinone.
LA–120006	69969	Avipel Liquid Corn Seed Treatment	Anthraquinone.
MA–160001	69969	Avipel Liquid Corn Seed Treatment	Anthraquinone.
MI–130001	69969	Avipel Liquid Corn Seed Treatment	Anthraquinone.
MN–120003	69969	Avipel Liquid Corn Seed Treatment	Anthraquinone.
MO–120004	69969	Avipel Liquid Corn Seed Treatment	Anthraquinone.
MO–160005	69969	Avipel Liquid Corn Seed Treatment	Anthraquinone.
MS–120009	69969	Avipel Liquid Corn Seed Treatment	Anthraquinone.
NC–130002	69969	Avipel Liquid Corn Seed Treatment	Anthraquinone.
ND–130002	69969	Avipel Liquid Corn Seed Treatment	Anthraquinone.
NJ–130002	69969	Avipel Liquid Corn Seed Treatment	Anthraquinone.
NY–170005	69969	Avipel Liquid Corn Seed Treatment	Anthraquinone.
PA–130001	69969	Avipel Liquid Corn Seed Treatment	Anthraquinone.
SD–130003	69969	Avipel Liquid Corn Seed Treatment	Anthraquinone.
SD–150006	69969	Avipel Liquid Corn Seed Treatment	Anthraquinone.
SD–170003	69969	Avipel Liquid Corn Seed Treatment	Anthraquinone.
TX–130001	69969	Avipel Liquid Corn Seed Treatment	Anthraquinone.

TABLE 1—PRODUCT CANCELLATIONS—Continued

Registration No.	Company No.	Product name	Active ingredients
UT–180006	69969	Avipel Liquid Corn Seed Treatment	Anthraquinone.
VT–120001	69969	Avipel Liquid Corn Seed Treatment	Anthraquinone.
WI–130004	69969	Avipel Liquid Corn Seed Treatment	Anthraquinone.
WY–140003	69969	Avipel Liquid Corn Seed Treatment	Anthraquinone.

TABLE 1A—PRODUCT CANCELLATIONS

Registration No.	Company No.	Product name	Active ingredients
1021–2753	1021	VBC Dinotefuran Technical	Dinotefuran.

The registrant of the registration in Table 1A, requests the cancellation to be effective on May 01, 2019.

TABLE 2—PRODUCT REGISTRATION AMENDMENTS TO TERMINATE USES

Registration No.	Company No.	Product name	Active ingredient	Uses to be terminated
100–1453	100	Stadium Fungicide	Difenoconazole; Fludioxonil & Azoxystrobin.	Ornamental uses and associated label language.
42182–1	42182	Microban Additive B	Triclosan	Treatment of apparel, blankets, cloths, curtains, fabrics, linens and similar textiles.
42182–7	42182	Microban Additive B MUP	Triclosan	Disallow formulation into products used to make/treat agricultural plastic films/mulches; products used to treat HVAC (heating/air conditioning) coils & products used to treat textiles.
89046–11	89046	Bioprotec Caterpillar Insecticide Concentrate.	Bacillus thuringiensis subspecies kurstaki, strain EVB–113–19.	Forestry use.
89046–12	89046	Bioprotec Plus	Bacillus thuringiensis subspecies kurstaki, strain EVB–113–19.	Forestry use.
89046–14	89046	Bioprotek	Bacillus thuringiensis subspecies kurstaki, strain EVB–113–19.	Forestry use.
90736–2	90736	Tebuconazole Tech	Tebuconazole	Residential use.
91232–3	91232	FD Tebuconazole 3.6F	Tebuconazole	Residential use.
92760–4	92760	Ultra-Fresh NM	Triclosan	Apparel use.
92760–6	92760	Ultra-Fresh NM–100	Triclosan	Apparel use.

Table 3 of this unit includes the names and addresses of record for all the registrants of the products listed in Tables 1, 1A and 2 of this unit, in sequence by EPA company number. This number corresponds to the first part of the EPA registration numbers of the products listed in Table 1, Table 1A and Table 2 of this unit.

TABLE 3—REGISTRANTS OF CANCELLED AND AMENDED PRODUCTS

EPA Company No.	Company name and address
100	Syngenta Crop Protection, LLC, 410 Swing Road, P.O. Box 18300, Greensboro, NC 27419–8300.
352	E. I. Du Pont De Nemours and Company, 9330 Zionsville Road, Indianapolis, IN 46268.
1021	Mclaughlin Gormley King Company, D/B/A MGK, 8810 Tenth Ave North, Minneapolis, MN 55427–4319.
6836	Lonza Inc., Agent Name: Exponent, Inc., 1150 Conn. Ave. NW, Suite 1100, Washington, DC 20036.
8660	United Industries Corp., D/B/A Sylorr Plant Corp., P.O. Box 142642, St. Louis, MO 63114–0642.
9779	Winfield Solutions, LLC, P.O. Box 64589, St. Paul, MN 55164–0589.
12455	Bell Laboratories, Inc., 3699 Kinsman Blvd., Madison, WI 53704.
42182	Microban Products Company, Agent Name: Scientific & Regulatory Consultants, Inc., 201 W. Van Buren Street, Columbia City, IN 46725.
45728	Taminco US, LLC, A Subsidiary of Eastman Chemical Company, 200 S. Wilcox Dr., Kingsport, TN 37660–5147.
59820	Allergopharma Joachim, Hermann-Korner-Str. 52, 21465 Reinbek, Germany.
64898	Sewer Sciences, Inc., 1020 Hiawatha Boulevard West, Syracuse, NY 13204–1131.
69969	Arkion Life Sciences, LLC, Agent Name: Landis International, Inc., 3815 Madison Highway, P.O. Box 5126, Valdosta, GA 31603–5126.
87290	Willowood, LLC, Agent Name: Wagner Regulatory Associates, Inc., P.O. Box 640, Hockessin, DE 19707–0640.
89046	AEF Global, Inc., Agent Name: SciReg, Inc., 12733 Director's Loop, Woodbridge, VA 22192.

TABLE 3—REGISTRANTS OF CANCELLED AND AMENDED PRODUCTS—Continued

EPA Company No.	Company name and address
89966	Greenfields Marketing, Ltd., Agent Name: Wagner Regulatory Associates, Inc., P.O. Box 640, Hockessin, DE 19707.
90736	Jiangsu Fengdeng Crop Science Co., Ltd., Agent Name: Pyxis Regulatory Consulting, Inc., 4110 136th St. Ct. NW, Gig Harbor, WA 98332.
91232	Fengdeng USA, Inc., 123 Cornell Road, Bala Cynwyd, PA 19004.
92760	Thomson Research Associates, Inc., Agent Name: Scientific & Regulatory Consultants, Inc., 201 West Van Buren Street, Columbia City, IN 46725.
93051	RightLine, LLC, Agent Name: Pyxis Regulatory Consulting, Inc., 4110 136th Street Ct. NW, Gig Harbor, WA 98332.
93088	Willowood USA, LLC, Agent Name: Pyxis Regulatory Consulting, Inc., 4110 136th Street Ct. NW, Gig Harbor, WA 98332.

III. Summary of Public Comments Received and Agency Response to Comments

During the public comment period provided, EPA received no comments in response to the July 24, 2019 **Federal Register** notice announcing the Agency's receipt of the requests for voluntary cancellations and amendments to terminate uses of products listed in Tables 1, 1A and 2 of Unit II.

IV. Cancellation Order

Pursuant to FIFRA section 6(f) (7 U.S.C. 136d(f)(1)), EPA hereby approves the requested cancellations and amendments to terminate uses of the registrations identified in Tables 1, 1A and 2 of Unit II. Accordingly, the Agency hereby orders that the product registrations identified in Tables 1, 1A and 2 of Unit II are canceled and amended to terminate the affected uses. The effective date of the cancellations and amendments listed in Table 1 and Table 2 that are subject of this notice is September 30, 2019. The registrant of the product listed in Table 1A requested the cancellation effective date of the May 1, 2019 for the product listed in Table 1A. Any distribution, sale, or use of existing stocks of the products identified in Tables 1, 1A and 2 of Unit II in a manner inconsistent with any of the provisions for disposition of existing stocks set forth in Unit VI will be a violation of FIFRA.

V. What is the Agency's authority for taking this action?

Section 6(f)(1) of FIFRA (7 U.S.C. 136d(f)(1)) provides that a registrant of a pesticide product may at any time request that any of its pesticide registrations be canceled or amended to terminate one or more uses. FIFRA further provides that, before acting on the request, EPA must publish a notice of receipt of any such request in the **Federal Register**. Thereafter, following the public comment period, the EPA Administrator may approve such a request. The notice of receipt for this action was published for comment in the **Federal Register** of July 24, 2019 (84 FR 35670) (FRL–9996–16). The comment period closed on August 23, 2019.

VI. Provisions for Disposition of Existing Stocks

Existing stocks are those stocks of registered pesticide products which are currently in the United States and which were packaged, labeled, and released for shipment prior to the effective date of the action. The existing stocks provision for the products subject to this order is as follows.

A. For Product 1021–2753

The registrant of 1021–2753 listed in Table 1A, requested the cancellation to be effective on May 01, 2019; therefore, the registrant may continue to sell and distribute existing stocks of these products until May 01, 2020, which is 1 year after the effective date of the cancellation.

For all other voluntary cancellations, the registrants may continue to sell and distribute existing stocks of products listed in Table 1 until September 30, 2019, which is 1 year after publication of this cancellation order in the **Federal Register**. Thereafter, the registrants are prohibited from selling or distributing products listed in Tables 1 and 1A of Unit II, except for export in accordance with FIFRA section 17 (7 U.S.C. 136o) or for proper disposal.

Now that EPA has approved product labels reflecting the requested amendments to terminate uses, registrants are permitted to sell or distribute products listed in Table 2 of Unit II under the previously approved labeling until March 30, 2021, a period of 18 months after publication of the cancellation order in this **Federal Register**, unless other restrictions have been imposed. Thereafter, registrants will be prohibited from selling or distributing the products whose labels include the terminated uses identified in Table 2 of Unit II, except for export consistent with FIFRA section 17 or for proper disposal.

Persons other than the registrant may sell, distribute, or use existing stocks of canceled products and products whose labels include the terminated uses until supplies are exhausted, provided that such sale, distribution, or use is consistent with the terms of the previously approved labeling on, or that accompanied, the canceled products and terminated uses.

Authority: 7 U.S.C. 136 *et seq.*

Dated: September 5, 2019.

Delores Barber,

Director, Information Technology and Resources Management Division, Office of Pesticide Programs.

[FR Doc. 2019–21122 Filed 9–27–19; 8:45 am]

BILLING CODE 6560–50–P

EXPORT-IMPORT BANK

[Public Notice: 2019–6020]

Agency Information Collection Activities: Comment Request

AGENCY: Export-Import Bank of the United States.

ACTION: Submission for OMB review and Comments request.

Form Title: EIB 12–02 Credit Guarantee Facility Disbursement Approval Request.

SUMMARY: The Export-Import Bank of the United States (EXIM Bank), as part of its continuing effort to reduce paperwork and respondent burden, invites the general public and other Federal Agencies to comment on the proposed information collection, as required by the Paperwork Reduction Act of 1995.

EXIM Bank has an electronic disbursement approval processing system for guaranteed lenders with Credit Guarantee Facilities. After a Credit Guarantee Facility (CGF) has been authorized by EXIM Bank and legal documentation has been completed, the lender will obtain and review the required disbursement documents (*e.g.,* invoices, bills of lading, Exporter's Certificate, etc.) and

will disburse the proceeds of the loan for eligible goods and services. In order to obtain approval of the disbursement, the lender will access and complete an electronic questionnaire through EXIM Bank's online application system (EXIM Online). Using the form, the lender will input key data and request EXIM Bank's approval of the disbursement. EXIM Bank's action (approved or denied) is posted on the lender's history page.

The information collected in the questionnaire will assist EXIM Bank in determining that each disbursement under a Medium-Term Guarantee meets all the terms and conditions for approval.

The information collection tool can be reviewed at: *http://exim.gov/sites/default/files/pub/pending/eib12-02.pdf.*

DATES: Comments must be received on or before November 29, 2019 to be assured of consideration.

ADDRESSES: Comments may be submitted electronically on *WWW.REGULATIONS.GOV* or by mail to Michele Kuester, Export-Import Bank, 811 Vermont Ave. NW, Washington, DC 20571.

SUPPLEMENTARY INFORMATION:

Title and Form Number: EIB 12–02 Credit Guarantee Facility Disbursement Approval Request.

OMB Number: 3048–0046.

Type of Review: Regular.

Need and Use: The information requested enables EXIM Bank to determine that a disbursement under a Credit Guarantee Facility meets all of the terms and conditions for approval.

Affected Public

This form affects lenders involved in the financing of U.S. goods and services exports.

Annual Number of Respondents: 50.

Estimated Time per Respondent: 60 minutes.

Annual Burden Hours: 50 hours.

Frequency of Reporting of Use: Annual.

Government Expenses

Reviewing Time per Year: 25 hours.

Average Wages per Hour: $42.50.

Average Cost per Year: $1,062.50 (time * wages).

Benefits and Overhead: 20%.

Total Government Cost: $1,275.

Bassam Doughman,

IT Project Manager.

[FR Doc. 2019–21047 Filed 9–27–19; 8:45 am]

BILLING CODE 6690–01–P

EXPORT-IMPORT BANK OF THE UNITED STATES

[Public Notice: 2019–6021]

Agency Information Collection Activities: Comment Request

AGENCY: Export-Import Bank of the United States.

ACTION: Submission for OMB review and comments request.

Form Title: EIB 12–01 Medium-Term Master Guarantee Agreement Disbursement Approval Request.

SUMMARY: The Export-Import Bank of the United States (EXIM Bank), as part of its continuing effort to reduce paperwork and respondent burden, invites the general public and other Federal Agencies to comment on the proposed information collection, as required by the Paperwork Reduction Act of 1995. EXIM Bank has an electronic disbursement approval processing system for guarantee lenders with transactions documented under Medium-Term Master Guarantee Agreements. After an export transaction has been authorized by EXIM Bank and legal documentation has been completed, the lender will obtain and review the required disbursement documents (*e.g.,* invoices, bills of lading, Exporter's Certificate, etc.) and will disburse the proceeds of the loan for eligible goods and services. In order to obtain approval of the disbursement, the lender will access and complete an electronic questionnaire through EXIM Bank's online application system (EXIM Online). Using the form, the lender will input key data and request EXIM Bank's approval of the disbursement. EXIM Bank's action (approved or denied) is posted on the lender's history page.

The information collected in the questionnaire will assist EXIM Bank in determining that each disbursement under a Medium-Term Guarantee meets all the terms and conditions for approval.

The information collection tool can be reviewed at: *http://exim.gov/sites/default/files/pub/pending/eib12-01.pdf.*

DATES: Comments must be received on or before November 29, 2019 to be assured of consideration.

ADDRESSES: Comments may be submitted electronically on *WWW.REGULATIONS.GOV* or by mail to Michele Kuester, Export-Import Bank, 811 Vermont Ave. NW, Washington, DC 20571.

SUPPLEMENTARY INFORMATION:

Title and Form Number: EIB 12–01 Medium-Term Master Guarantee Agreement Disbursement Approval Request.

OMB Number: 3048–0049.

Type of Review: Regular.

Need and Use: The information requested enables EXIM Bank to determine that a disbursement under a Medium-Term Guarantee meets all of the terms and conditions for approval.

Affected Public: This form affects lenders involved in the financing of U.S. goods and services exports.

Annual Number of Respondents: 150.

Estimated Time per Respondent: 30 minutes.

Annual Burden Hours: 75 hours.

Frequency of Reporting of Use: Annual.

Government Expenses:

Reviewing time per year: 38 hours.

Average Wages per Hour: $42.50.

Average Cost per Year: $1,615.00 (time * wages).

Benefits and Overhead: 20%.

Total Government Cost: $1,938.

Bassam Doughman,

IT Project Manager.

[FR Doc. 2019–21116 Filed 9–27–19; 8:45 am]

BILLING CODE 6690–01–P

EXPORT–IMPORT BANK OF THE UNITED STATES

[Public Notice: 2019–6023]

Agency Information Collection Activities: Comment Request

AGENCY: Export-Import Bank of the United States.

ACTION: Submission for OMB Review and comments request.

Form Title: EIB 92–51 Application for Special Buyer Credit Limit under the Multi-Buyer Export Credit Insurance Policy.

SUMMARY: The Export-Import Bank of the United States (EXIM Bank), as a part of its continuing effort to reduce paperwork and respondent burden, invites the general public and other Federal Agencies to comment on the proposed information collection, as required by the Paperwork Reduction Act of 1995.

The Application for Special Buyer Credit Limit under the Multi-Buyer Export Credit Insurance Policy is used by policyholders, the majority of whom are U.S. small businesses, who export U.S. goods and services. This application provides EXIM Bank with the credit information necessary to make a determination of eligibility of a transaction for EXIM Bank support with a foreign buyer credit request and to obtain legislatively required assurance

of repayment and fulfills other statutory requirements.

The application can be reviewed at: *http://www.exim.gov/sites/default/files/pub/pending/eib-92-51.pdf* Application for Special Buyer Credit Limit Multi-buyer Credit Insurance Policy.

DATES: Comments should be received on or before November 29, 2019 to be assured of consideration.

ADDRESSES: Comments may be submitted electronically on *WWW.REGULATIONS.GOV* or by mail to Rodrigo Patzy, Export-Import Bank of the United States, 811 Vermont Ave. NW, Washington, DC 20571

SUPPLEMENTARY INFORMATION:

Titles and Form Number: EIB 92–51 Application for Special buyer credit Limit Multi-buyer Credit Insurance Policy.

OMB Number: 3048–0015.

Type of Review: Regular.

Need and Use: The information requested enables the applicant to provide EXIM Bank with the information necessary to obtain legislatively required assurance of repayment and fulfills other statutory requirements.

The only changes to this form are to have the summary of credit experience with the buyer mirror the questions of our computer-based program: Ex-Im online. No new information is being collected.

Affected Public: This form affects entities involved in the export of U.S. goods and services.

The number of respondents: 4,300.

Estimated time per respondents: 25 minutes.

The frequency of response: As needed.

Annual hour burden: 1,792 total hours.

Government Expenses:

Reviewing time per hour: 1 hour.

Responses per year: 4,300.

Reviewing time per year: 4,300 hours.

Average Wages per hour: $42.50.

*Average cost per year (time * wages):* $182,750.

Benefits and overhead: 20%.

Total Government Cost: $219,300.

Bassam Doughman,

Project Manager, Agency Clearance Officer, Office of the Chief Information Officer.

[FR Doc. 2019–21125 Filed 9–27–19; 8:45 am]

BILLING CODE 6690–01–P

EXPORT–IMPORT BANK

[Public Notice 2019–6022]

Agency Information Collection Activities: Final Collection; Comment Request

AGENCY: Export-Import Bank of the U.S.

ACTION: Submission for OMB Review and Comments Request.

Form Title: EIB 09–01 Payment Default Report OMB 3048–0028.

SUMMARY: The Export-Import Bank of the United States (EXIM), as a part of its continuing effort to reduce paperwork and respondent burden, invites the general public and other Federal Agencies to comment on the proposed information collection, as required by the Paperwork Reduction Act of 1995. This collection allows insured/guaranteed parties and insurance brokers to report overdue payments from the borrower and/or guarantor. To facilitate completion, the form includes many checkboxes and self-populating fields. Also, customers can submit it electronically through EXIM Online, replacing paper reporting. EXIM provides insurance, loans, and loan guarantees for the financing of exports of goods and services.

The form can be viewed at: *https://www.exim.gov/sites/default/files//forms/eib09-01_0.pdf.*

DATES: Comments should be received on or before November 29, 2019 to be assured of consideration.

ADDRESSES: Comments may be submitted electronically on *http://www.regulations.gov* or mail to Mr. Gary Allo, Export Import Bank of the United States, 811 Vermont Ave. NW, Washington, DC 20571. Attn: 3048–0028.

FOR FURTHER INFORMATION CONTACT: Gary Allo, Export Import Bank of the United States, 811 Vermont Avenue NW, Washington, DC 20571.

SUPPLEMENTARY INFORMATION:

Titles and Form Number: EIB 09–01, Payment Default Report.

OMB Number: 3048–0028.

Type of Review: Regular.

Need and Use: The information requested enables insured/guaranteed parties and insurance brokers to report overdue payments from the borrower and/or guarantor.

Affected Public:

This form affects Insured/guaranteed parties and brokers.

Annual Number of Respondents: 500.

Estimated Time per Respondent: 15 minutes.

Annual Burden Hours: 125 hours.

Frequency of Reporting of Use: Annual.

Government Expenses:

Reviewing time per year: 8.3 hours.

Average Wages per Hour: $42.50.

Average Cost per Year: $354.02 (time*wages).

Benefits and Overhead: 20%.

Total Government Cost: $424.83.

Bassam Doughman,

IT Specialist.

[FR Doc. 2019–21067 Filed 9–27–19; 8:45 am]

BILLING CODE 6690–01–P

FEDERAL DEPOSIT INSURANCE CORPORATION

Agency Information Collection Activities: Proposed Collection Renewal; Comment Request (OMB No. 3064–0026; –0079; –0122; and –0139)

AGENCY: Federal Deposit Insurance Corporation (FDIC).

ACTION: Notice and request for comment.

SUMMARY: The FDIC, as part of its obligations under the Paperwork Reduction Act of 1995 (PRA), invites the general public and other Federal agencies to take this opportunity to comment on the renewal of the existing information collections described below (3064–0026; –0079;–0122; and –0139).

DATES: Comments must be submitted on or before November 29, 2019.

ADDRESSES: Interested parties are invited to submit written comments to the FDIC by any of the following methods:

- *FDIC Website: https://www.FDIC.gov/regulations/laws/federal.*
- *Email: comments@fdic.gov.* Include the name and number of the collection in the subject line of the message.
- *Mail:* Manny Cabeza (202–898–3767), Counsel, MB–3128, Federal Deposit Insurance Corporation, 550 17th Street NW, Washington, DC 20429.
- *Hand Delivery:* Comments may be hand-delivered to the guard station at the rear of the 17th Street Building (located on F Street), on business days between 7:00 a.m. and 5:00 p.m.
- *Federal eRulemaking Portal: http://www.regulations.gov.* Follow the instructions for submitting comments.

All comments should refer to the relevant OMB control number. A copy of the comments may also be submitted to the OMB desk officer for the FDIC: Office of Information and Regulatory Affairs, Office of Management and Budget, New Executive Office Building, Washington, DC 20503.

FOR FURTHER INFORMATION CONTACT: Manny Cabeza, Counsel, (202) 898–3767, *mcabeza@fdic.gov,* MB–3128, Federal Deposit Insurance Corporation,

550 17th Street NW, Washington, DC 20429.

SUPPLEMENTARY INFORMATION:

Proposal to renew the following currently approved collection of information:

1. *Title:* Transfer Agent Registration and Amendment Form.

OMB Number: 3064–0026.

Form: Transfer Agent Registration and Amendment Form (Form TA–1).

Affected Public: Private Sector, insured state nonmember banks and state savings associations.

Burden Estimate:

SUMMARY OF ANNUAL BURDEN

Information collection (IC) description	Type of burden	Obligation to respond	Estimated number of respondents	Estimated number of responses	Estimated time per response (hours)	Frequency of response	Total estimated annual burden (hours)
Transfer Agent Registration and Amendment Form.	Reporting	Mandatory	12	1	.39	On Occasion ...	4.73
Total Estimated Annual Burden Hours.	.....	.....	.....	.....	.....	.....	4.73

General Description of Collection: Section 17A(c) of the Security Exchange Act of 1934 (the Act) requires all transfer agents for securities registered under section 12 of the Act or, if the security would be required to be registered except for the exemption from registration provided by Section 12(g)(2)(B) or Section 12(g)(2)(G), to ''fil[e] with the appropriate regulatory agency . . . an application for registration in such form and containing such information and documents . . . as such appropriate regulatory agency may prescribe as necessary or appropriate in furtherance of the purposes of this section.'' In general, an entity performing transfer agent functions for a security is required to register with its appropriate regulatory agency (ARA) if the security is registered on a national securities exchange or if the issuer of the security has total assets exceeding $10 million and a class of equity security held of record by 2,000 persons or, for an issuer that is not a bank, BHC, or SLHC, by 500 persons who are not accredited investors.2 The Board's Regulation H (12 CFR 208.31(a)) and Regulation Y (12 CFR 225.4(d)), the OCC's 12 CFR 9.20, and the FDIC's 12 CFR part 341 implement these provisions of the Act. To accomplish the registration of transfer agents, Form TA–1 was developed in 1975 as an interagency effort by the Securities and Exchange Commission (SEC) and the agencies. The agencies primarily use the data collected on Form TA–1 to determine whether an application for registration should be approved, denied, accelerated or postponed, and they use the data in connection with their supervisory responsibilities.

2. *Title:* Application for Consent to Reduce or Retire Capital.

OMB Number: 3064–0079.

Form: None.

Affected Public: Insured state nonmember banks and state savings associations.

Burden Estimate:

SUMMARY OF ANNUAL BURDEN

Information collection (IC) description	Type of burden	Obligation to respond	Estimated number of respondents	Estimated number of responses	Estimated time per response (hours)	Frequency of response	Total estimated annual burden (hours)
Application for consent to reduce or retire capital.	Reporting	Mandatory	118	1	11	On Occasion ...	1,298
Total Estimated Annual Burden Hours.	.....	.....	.....	.....	.....	.....	1,298

General Description of Collection: Insured state nonmember banks proposing to change their capital structure must submit an application containing information about the proposed change to obtain FDIC's consent to reduce or retire capital.

3. *Title:* Forms Relating to FDIC Outside Counsel, Legal Support and Expert Services Programs.

OMB Number: 3064–0122.

Forms: See Table below.

Affected Public: Entities providing legal and expert services to the FDIC.

Burden Estimate:

SUMMARY OF ANNUAL BURDEN

Information collection (IC) description	Type of burden	Obligation to respond	Estimated number of respondents	Estimated number of responses	Estimated time per response (hours)	Frequency of response	Total estimated annual burden (hours)
Non-Litigation Budget Form Form No, 5000/26.	Reporting	Mandatory	185	1	0.50	On Occasion ...	92.50
Amended Litigation Budget Form No. 5000/31.	Reporting	Mandatory	100	1	0.50	On Occasion ...	50.00
Amended Non-Litigation Budget Form No. 5000/33.	Reporting	Mandatory	50	1	0.50	On Occasion ...	25.00
Litigation Budget Form No.5000/35	Reporting	Mandatory	100	1	0.50	On Occasion ...	50.00
Representations and Certifications for Legal Contractors Form No.5210/01.	Reporting	Mandatory	60	1	0.75	On Occasion ...	45.00

SUMMARY OF ANNUAL BURDEN—Continued

Information collection (IC) description	Type of burden	Obligation to respond	Estimated number of respondents	Estimated number of responses	Estimated time per response (hours)	Frequency of response	Total estimated annual burden (hours)
Expert Invoice for Fees and Expenses (EIF&E) Form No. 5000/01.	Reporting	Mandatory	50	1	0.50	On Occasion	25.00
Legal Support Services (LSS) Provider Invoice for Fees and Expenses (IF&E) Form No..	Reporting	Mandatory	30	1	0.50	On Occasion	15.00
Agreement for Services (Expert/Legal Support Services (LSS) Provider) Amendment Form No. 5210/03.	Reporting	Mandatory	30	1	1.00	On Occasion	30.00
Agreement for Services (Expert/Legal Support Services (LSS) Provider) Rate Schedule Form No. 5210/04.	Reporting	Mandatory	100	1	1.00	On Occasion	100.00
Legal Services Agreement (LSA) Amendment Form No. 5210/06.	Reporting	Mandatory	50	1	1.00	On Occasion	50.00
Expert budget Form No. 5210/08	Reporting	Mandatory	80	1	0.50	On Occasion	40.00
Representations and Certifications for Experts and Legal Support Services Providers Form No. 5210/09.	Reporting	Mandatory	65	1	1.00	On Occasion	65.00
Outside Counsel Legal Services Agreement Rate Schedule Form No. 5210/10.	Reporting	Mandatory	65	1	1.00	On Occasion	65.00
Legal Invoice for Fees and Expenses Form No. 5210/11.	Reporting	Mandatory	100	1	1.00	On Occasion	100.00
Firm Travel Voucher Form No. 5210/12	Reporting	Mandatory	100	1	1.00	On Occasion	100.00
Oral Representations and Certifications for Expert Legal Support Services Telephone Authorization For Expenditures Under $5,000 Form No. 5210/14.	Reporting	Mandatory	50	1	0.50	On Occasion	25.00
Legal Support Services (LSS) Provider Budget Form Form No. 5210/15.	Reporting	Mandatory	25	1	0.50	On Occasion	12.50
Legal Services Agreement (LSA) Form No. 5210/13.	Reporting	Mandatory	65	1	0.25	On Occasion	16.25
Total Estimated Annual Burden Hours.							906.25

General Description of Collection: The information collected enables the FDIC to ensure that all individuals, businesses and firms seeking to provide legal support services to the FDIC meet the eligibility requirements established by Congress. The information is also used to manage and monitor payments to contractors, document contract amendments, expiration dates, billable individuals, minority law firms, and to ensure that law firms, experts, and other legal support services providers comply with statutory and regulatory requirements. This collection consists of 18 forms.

4. *Title:* CRA Sunshine.
OMB Number: 3064–0139.
Forms: None.
Affected Public: Insured state nonmember banks and state savings associations and their affiliates and nongovernmental entities and persons.
Burden Estimate:

SUMMARY OF ANNUAL BURDEN

Information collection (IC) description	Type of burden	Obligation to respond	Estimated number of respondents	Estimated number of responses	Estimated time per response (hours)	Frequency of response	Total estimated annual burden (hours)
Disclosure burden for insured depository institutions and affiliates—.6(b) covered agreements to public.	Third Party Disclosure.	Mandatory	10	1	1	Annually	14
Disclosure burden for insured depository institutions and affiliates—.6(d) copy of agreement to agency.	Third Party Disclosure.	Mandatory	10	1	1	Annually	14
Disclosure burden for insured depository institutions and affiliates—.6(b)(ii) list of agreements to agency.	Third Party Disclosure.	Mandatory	10	1	1	Annually	14
Disclosure burden for insured depository institutions and affiliates—.6(d) agreements relating to activities of CRA affiliates.	Third Party Disclosure.	Mandatory	10	1	1	Annually	14.00
Reporting burden for insured depository institutions and affiliates—.7(b) annual report.	Reporting	Mandatory	10	1	4	Annually	40
Reporting burden for insured depository institutions and affiliates—.7(f)(2)(ii): Filing NGEP annual report.	Reporting	Mandatory	6	1	1	Annually	6
Disclosure burden for non-government entity or person—.6(c): Copy of agreement to agency.	Third Party Disclosure.	Mandatory	6	1	1	Annually	6

SUMMARY OF ANNUAL BURDEN—Continued

Information collection (IC) description	Type of burden	Obligation to respond	Estimated number of respondents	Estimated number of responses	Estimated time per response (hours)	Frequency of response	Total estimated annual burden (hours)
Disclosure burden for non-government entity or person—.6(b): Covered agreements to public.	Third Party Disclosure.	Mandatory	6	1	1	Annually	6
Reporting burden for NGEP—.7(b): Annual report.	Reporting	Mandatory	6	1	4	Annually	24
Total Estimated Annual Burden Hours.	.....	.....	.....	.....	.....	.....	138

General Description of Collection: This collection implements a statutory requirement imposing reporting, disclosure and recordkeeping requirements on some community reinvestment-related agreements between insured depository institutions or affiliates, and nongovernmental entities or persons. The information assists interested members of the public in assessing whether the parties are fulfilling their agreements, and helps the agencies understand how the institutions they regulate are fulfilling their CRA responsibilities.

Request for Comment

Comments are invited on: (a) Whether the collection of information is necessary for the proper performance of the FDIC's functions, including whether the information has practical utility; (b) the accuracy of the estimates of the burden of the information collection, including the validity of the methodology and assumptions used; (c) ways to enhance the quality, utility, and clarity of the information to be collected; and (d) ways to minimize the burden of the collection of information on respondents, including through the use of automated collection techniques or other forms of information technology. All comments will become a matter of public record.

Federal Deposit Insurance Corporation.

Dated at Washington, DC, on September 25, 2019.

Robert E. Feldman,

Executive Secretary.

[FR Doc. 2019–21107 Filed 9–27–19; 8:45 am]

BILLING CODE 6714–01–P

FEDERAL RESERVE SYSTEM

Proposed Agency Information Collection Activities; Comment Request

AGENCY: Board of Governors of the Federal Reserve System.

ACTION: Notice, request for comment.

SUMMARY: The Board of Governors of the Federal Reserve System (Board) invites comment on a proposal to extend for three years, without revision, the Recordkeeping and Disclosure Requirements Associated with Regulation RR (FR RR; OMB No. 7100–0372).[1]

DATES: Comments must be submitted on or before November 29, 2019.

ADDRESSES: You may submit comments, identified by *FR RR,* by any of the following methods:

- *Agency website: https://www.federalreserve.gov/.* Follow the instructions for submitting comments at *https://www.federalreserve.gov/apps/foia/proposedregs.aspx.*
- *Email: regs.comments@federalreserve.gov.* Include the OMB number in the subject line of the message.
- *FAX:* (202) 452–3819 or (202) 452–3102.
- *Mail:* Ann E. Misback, Secretary, Board of Governors of the Federal Reserve System, 20th Street and Constitution Avenue NW, Washington, DC 20551.

All public comments are available from the Board's website at *https://www.federalreserve.gov/apps/foia/proposedregs.aspx* as submitted, unless modified for technical reasons or to remove personally identifiable information at the commenter's request. Accordingly, comments will not be edited to remove any identifying or contact information. Public comments may also be viewed electronically or in paper in Room 146, 1709 New York Avenue NW, Washington, DC 20006, between 9:00 a.m. and 5:00 p.m. on weekdays. For security reasons, the Board requires that visitors make an appointment to inspect comments. You may do so by calling (202) 452–3684. Upon arrival, visitors will be required to present valid government-issued photo identification and to submit to security screening in order to inspect and photocopy comments.

Additionally, commenters may send a copy of their comments to the Office of Management and Budget (OMB) Desk Officer—Shagufta Ahmed—Office of Information and Regulatory Affairs, Office of Management and Budget, New Executive Office Building, Room 10235, 725 17th Street NW, Washington, DC 20503, or by fax to (202) 395–6974.

FOR FURTHER INFORMATION CONTACT: A copy of the Paperwork Reduction Act (PRA) OMB submission, including the reporting form and instructions, supporting statement, and other documentation will be placed into OMB's public docket files, if approved. These documents will also be made available on the Board's public website at *https://www.federalreserve.gov/apps/reportforms/review.aspx* or may be requested from the agency clearance officer, whose name appears below.

Federal Reserve Board Clearance Officer—Nuha Elmaghrabi—Office of the Chief Data Officer, Board of Governors of the Federal Reserve System, Washington, DC 20551, (202) 452–3829.

SUPPLEMENTARY INFORMATION: On June 15, 1984, OMB delegated to the Board authority under the PRA to approve and assign OMB control numbers to collections of information conducted or sponsored by the Board. In exercising this delegated authority, the Board is directed to take every reasonable step to solicit comment. In determining whether to approve a collection of information, the Board will consider all comments received from the public and other agencies.

Request for Comment on Information Collection Proposal

The Board invites public comment on the following information collection, which is being reviewed under authority delegated by the OMB under the PRA. Comments are invited on the following:

[1] The internal Agency Tracking Number previously assigned by the Board to this information collection was ''Reg RR.'' The Board is changing the internal Agency Tracking Number to ''FR RR'' for the purpose of consistency.

a. Whether the proposed collection of information is necessary for the proper performance of the Board's functions, including whether the information has practical utility;

b. The accuracy of the Board's estimate of the burden of the proposed information collection, including the validity of the methodology and assumptions used;

c. Ways to enhance the quality, utility, and clarity of the information to be collected;

d. Ways to minimize the burden of information collection on respondents, including through the use of automated collection techniques or other forms of information technology; and

e. Estimates of capital or startup costs and costs of operation, maintenance, and purchase of services to provide information.

At the end of the comment period, the comments and recommendations received will be analyzed to determine the extent to which the Board should modify the proposal.

Proposal under OMB Delegated Authority to Extend for Three Years, Without Revision, the Following Information Collection:

Report title: Recordkeeping and Disclosure Requirements Associated with Regulation RR.

Agency form number: FR RR.

OMB control number: 7100–0372.

Frequency: Event generated; annual.

Respondents: Securitizers that are, or are a subsidiary of, a state member bank, bank holding company, savings and loan holding company, intermediate holding company, Edge or agreement corporation, foreign banking organization, or nonbank financial company supervised by the Board.

Estimated number of respondents: 10.

Estimated average hours per response:

Sections 244.4 and 246.4—standard risk retention: Horizontal interests: Recordkeeping—0.5 hours, disclosures—5.5 hours; vertical interests: Recordkeeping—0.5 hours, disclosures—2.0 hours; combined horizontal and vertical interests: Recordkeeping—0.5 hours, disclosures—7.5 hours;

Sections 244.5 and 246.5—revolving master trusts: Recordkeeping—0.5 hours, disclosures—7.0 hours;

Sections 244.6 and 246.6—eligible asset-backed commercial paper (ABCP) conduits: Recordkeeping—20.0 hours, disclosures—3.0 hours;

Sections 244.7 and 246.7—commercial mortgage-backed securities: Recordkeeping—30.0 hours, disclosures—20.75 hours;

Sections 244.8 and 246.8—FNMA and FHLMC asset-backed securities (ABS): Disclosures—1.5 hours;

Sections 244.9 and 246.9—open market collateralized loan obligations (CLOs): Disclosures—20.25 hours;

Sections 244.10 and 246.10—qualified tender option bonds: Disclosures—6.0 hours;

Sections 244.11 and 246.11—allocation of risk retention to an originator: Recordkeeping—20.0 hours, disclosures—2.5 hours;

Sections 244.13, 244.19(g), 246.13, and 246.19(g)—exemption for qualified residential mortgages and qualifying 3-to-4 unit residential mortgage loans: Recordkeeping—40.0 hours, disclosures—1.25 hours;

Sections 244.15 and 246.15—exemption for qualifying commercial loans, commercial real estate loans, and automobile loans: Recordkeeping—0.5 hours, disclosures—20.0 hours;

Sections 244.16 and 246.16—underwriting standards for qualifying commercial loans: Recordkeeping—40.5 hours, disclosures—1.25 hours;

Sections 244.17 and 246.17—underwriting standards for qualifying commercial real estate (CRE) loans: Recordkeeping—40.5 hours, disclosures—1.25 hours; and

Sections 244.18 and 246.18—underwriting standards for qualifying automobile loans: Recordkeeping—40.5 hours, disclosures—1.25 hours.

Estimated annual burden hours: 2,114.

General description of report: The recordkeeping and disclosure requirements in the credit risk retention rule are set forth below. Compliance with the information collections is mandatory.

Standard Risk Retention. Section 244.4 of Regulation RR and section 246.4 of the Securities and Exchange Commission's (SEC's) credit risk retention rule set forth the conditions that must be met by sponsors of a securitization that elects to use the credit risk retention rule's standard risk retention option, which may consist of an eligible vertical interest or an eligible horizontal residual interest, as defined by the rule, or any combination thereof. Sections 244.4(c) of Regulation RR and section 246.4(c) of the SEC's credit risk retention rule set forth the disclosure requirements for a sponsor that uses the standard risk retention option.

A reasonable period of time prior to the sale of an ABS issued in the same offering of ABS interests, a sponsor retaining any eligible horizontal residual interest (or funding a horizontal cash reserve account), is required to disclose to potential investors: The fair value (or a range of fair values and the method used to determine such range) of the eligible horizontal residual interest that the sponsor expects to retain at the closing of the securitization transaction; the material terms of the eligible horizontal residual interest; the methodology used to calculate the fair value (or range of fair values) of all classes of ABS interests; the key inputs and assumptions used in measuring the estimated total fair value (or range of fair values) of all classes of ABS interests, including, to the extent applicable, certain enumerated items; and a description of the reference data set or other historical information used to develop the key inputs and assumptions. A reasonable time after the closing of the securitization transaction, the sponsor must disclose: The fair value of the eligible horizontal residual interest retained by the sponsor; the fair value of the eligible horizontal residual interest required to be retained by the sponsor; and a description of any material differences between the methodology used in calculating the fair value disclosed prior to sale and the methodology used to calculate the fair value at the time of closing. If the sponsor retains risk through the funding of an eligible horizontal cash reserve account, the sponsor must also disclose the amount placed by the sponsor in the horizontal cash reserve account at closing, the fair value of the eligible horizontal residual interest that the sponsor is required to fund through such account, and a description of such account.

For eligible vertical interests, a reasonable period of time prior to the sale of an ABS issued in the same offering of ABS interests, the sponsor is required to disclose to potential investors: The form of the eligible vertical interest; the percentage that the sponsor is required to retain; and a description of the material terms of the vertical interest and the amount the sponsor expects to retain at closing. A reasonable time after the closing of the securitization transaction, the sponsor must disclose the amount of vertical interest retained by the sponsor at closing, if that amount is materially different from the amount disclosed earlier.

Section 244.4(d) of Regulation RR and section 246.4(d) of the SEC's credit risk retention rule require a sponsor to retain the certifications and disclosures by section 244.4 of Regulation RR and section 246.4 of the SEC's credit risk retention rule. The sponsor must retain these records until three years after all ABS interests are no longer outstanding.

Revolving Pool Securitizations. Section 244.5 of Regulation RR and section 246.5 of the SEC's credit risk retention rule require sponsors relying

on the revolving pool securitization risk retention option to disclose in writing to potential investors, a reasonable period of time prior to the sale of an ABS, the material terms of the seller's interest and the percentage of the seller's interest that the sponsor expects to retain at the closing of the transaction. A reasonable time after the closing of the transaction, the sponsor must disclose in writing: The amount of the seller's interest that the sponsor retained at closing, if materially different from the amount previously disclosed; the material terms of any horizontal risk retention offsetting the seller's interest under sections 244.5(g), 244.5(h), and 244.5(i) of Regulation RR or sections 246.5(g), 246.5(h), or 246.5(i) of the SEC's credit risk retention rule, as applicable; and the fair value of any horizontal risk retention retained by the sponsor. Additionally, a sponsor must retain these disclosures in its records until three years after all are ABS interests are no longer outstanding.

Eligible ABCP Conduits. Section 244.6 of Regulation RR and section 246.6 of the SEC's credit risk retention rule address the requirements for sponsors utilizing the eligible ABCP conduit risk retention option. The sponsor must disclose to each purchaser of ABCP, before or at the time of the first sale of ABCP to such purchaser and at least monthly thereafter to each holder of commercial paper issued by the ABCP conduit: The name and form of organization of the regulated liquidity provider that provides liquidity coverage to the eligible ABCP conduit, including a description of the material terms of such liquidity coverage, and notice of any failure to fund; and with respect to each ABS interest held by the ABCP conduit, the asset class or brief description of the underlying securitized assets, the standard industrial category code for each originator-seller that retains an interest in the securitization transaction, and a description of the percentage amount and form of interest retained by each originator-seller.

A sponsor relying on the eligible ABCP conduit risk retention option shall maintain and adhere to policies and procedures to monitor compliance by each relevant originator-seller. If the ABCP conduit sponsor determines that an originator-seller is no longer in compliance, the sponsor must promptly notify the holders of the ABCP in writing of the name and form of organization of any originator-seller that fails to properly retain risk; the amount of ABS interests issued by an intermediate special purpose vehicle (SPV) of such originator-seller and held by the ABCP conduit; the name and form of organization of any originator-seller that hedges, directly or indirectly through an intermediate SPV; the risk retention in violation of the rule; the amount of ABS interests issued by an intermediate SPV of such originator-seller and held by the ABCP conduit; and any remedial actions taken by the ABCP conduit sponsor or other party with respect to such ABS interests.

Commercial Mortgage-Backed Securities. Section 244.7 of Regulation RR and section 246.7 of the SEC's credit risk retention rule set forth the requirements for sponsors relying on the commercial mortgage-backed securities risk retention option and requires a sponsor to make, a reasonable period of time prior to the sale of the ABS as part of the securitization transaction, the following disclosures to potential investors: The name and form of organization of each initial third-party purchaser; each initial third-party purchaser's experience in investing in commercial mortgage-backed securities; other material information regarding each initial third-party purchaser or each initial third-party purchaser's retention of the interest; the fair value and purchase price of the eligible horizontal residual interest retained by each third-party purchaser; the fair value of the eligible horizontal residual interest that the sponsor would have retained if the sponsor had relied on retaining an eligible horizontal residual interest under the standard risk retention option; a description of the material terms of the eligible horizontal residual interest retained by each initial third-party purchaser, including the same information as is required to be disclosed by sponsors retaining horizontal interests pursuant to section 244.4; the material terms of the applicable transaction documents with respect to the Operating Advisor; and representations and warranties concerning the securitized assets, a schedule of any securitized assets that are determined not to comply with such representations and warranties, and the factors used to determine that such securitized assets should be included in the pool notwithstanding that they did not comply with the representations and warranties. A sponsor relying on the commercial mortgage-backed securities risk retention option is also required to include in the underlying securitization transaction documents certain provisions related to the appointment of an operating advisor, to maintain and adhere to policies and procedures to monitor compliance by third-party purchasers with regulatory requirements, and to notify the holders of the ABS interests in the event of noncompliance by a third-party purchaser with such regulatory requirements.

Federal National Mortgage Association and Federal Home Loan Mortgage Corporation ABS. Section 244.8(c) of Regulation RR and section 246.8(c) of the SEC's credit risk retention rule require that a sponsor relying on the Federal National Mortgage Association and Federal Home Loan Mortgage Corporation risk retention option disclose to investors a description of the manner in which it has met the credit risk retention requirements.

Open Market CLOs. Section 244.9 of Regulation RR and section 246.9 of the SEC's credit risk retention rule set forth the requirements for sponsors relying on the open market CLO risk retention option. A reasonable period of time prior to the sale of ABS in the securitization transaction, a sponsor must disclose to potential investors a complete list of, and certain information related to, every asset held by an open market CLO and the full legal name and form of organization of the CLO manager.

Qualified Tender Option Bonds. Section 244.10 of Regulation RR and section 246.10 of the SEC's credit risk retention rule set forth the requirements for sponsors relying on the qualified tender option bond risk retention option and requires, a reasonable period of time prior to the sale of the ABS as part of the securitization transaction, the following disclosures to potential investors: The name and form of organization of the qualified tender option bond entity; a description of the form and subordination features of the retained interest in accordance with the disclosure obligations associated with the standard risk retention option; the fair value of any portion of the retained interest that is claimed by the sponsor as an eligible horizontal residual interest; and the percentage of ABS interests issued that is represented by any portion of the retained interest that is claimed by the sponsor as an eligible vertical interest. In addition, to the extent any portion of the retained interest claimed by the sponsor is a municipal security held outside of the qualified tender option bond entity, the sponsor must disclose the name and form of organization of the qualified tender option bond entity; the identity of the issuer of the municipal securities; the face value of the municipal securities deposited into the qualified tender option bond entity; and the face value of the municipal securities

retained outside of the qualified tender option bond entity by the sponsor or its majority-owned affiliates.

Allocation of Risk Retention to an Originator. Section 244.11 of Regulation RR and section 246.11 of the SEC's credit risk retention rule set forth the conditions that apply when the sponsor of a securitization allocates to originators of securitized assets a portion of the credit risk the sponsor is required to retain. The sponsor must provide the same disclosures required by section 244.4(c) of Regulation RR or section 246.6(c) of the SEC's credit risk retention rule, as applicable, and must also, a reasonable period of time prior to the sale of the ABS as part of the securitization transaction, disclose the following to potential investors: The name and form of organization of any originator that acquired and retained (or will acquire and retain) an interest in the transaction; a description of the form, amount, and nature of such interest; and the method of payment for such interest. A sponsor relying on this section is also required to maintain and adhere to policies and procedures that are reasonably designed to monitor originator compliance with the retention amount, as well as hedging, transferring, and pledging requirements, and to promptly notify the holders of the ABS interests issued in the transaction in the event of originator non-compliance with such requirements.

Exemption for Qualified Residential Mortgages and Exemptions for Securitizations of Certain Three-to-Four Unit Mortgage Loans. Sections 244.13 and 244.19(g) of Regulation RR and sections 246.13 and 246.19(g) of the SEC's credit risk retention rule provide exemptions from the risk retention requirements for qualified residential mortgages and qualifying three-to-four unit residential mortgage loans that meet certain criteria, including that the depositor with respect to the securitization transaction certify that it has evaluated the effectiveness of its internal supervisory controls and concluded that the controls are effective, and that the sponsor provide a copy of the certification to potential investors prior to sale of asset-backed securities in the issuing entity. In addition, sections 244.13(c)(3) and 244.19(g)(3) of Regulation RR and sections 246.13(c)(3) and 246.19(g)(3) of the SEC's credit risk retention rule provide that a sponsor that has relied upon the exemptions will not lose the exemptions if, after closing of the transaction, it is determined that one or more of the residential mortgage loans does not meet all of the criteria, provided that the depositor complies with certain specified requirements, including prompt notice to the holders of the asset-backed securities of any loan that is required to be repurchased by the sponsor, the amount of such repurchased loan, and the cause for such repurchase.

Qualifying Commercial Loans, CRE Loans, and Automobile Loans. Section 244.15 of Regulation RR and section 246.15 of the SEC's credit risk retention rule provide exemptions from the risk retention requirements for qualifying commercial loans that meet the criteria specified in section 244.16 of Regulation RR or section 246.16 of the SEC's credit risk retention rule, qualifying CRE loans that meet the criteria specified in section 244.17 of Regulation RR or section 246.17 of the SEC's credit risk retention rule, and qualifying automobile loans that meet the criteria specified in section 244.18 of Regulation RR or section 246.18 of the SEC's credit risk retention rule. A sponsor must disclose to potential investors, a reasonable period of time prior to the sale of asset-backed securities of the issuing entity: A description of the manner in which the sponsor determined the aggregate risk retention requirement for the securitization transaction after including qualifying commercial loans, qualifying CRE loans, or qualifying automobile loans with 0 percent risk retention. In addition, the sponsor is required to disclose descriptions of the qualifying commercial loans, qualifying CRE loans, and qualifying automobile loans (qualifying assets), and descriptions of the assets that are not qualifying assets, and the material differences between the group of qualifying assets and the group of assets that are not qualifying assets with respect to the composition of each group's loan balances, loan terms, interest rates, borrower credit information, and characteristics of any loan collateral. Additionally, a sponsor must retain the above disclosures in its records until three years after all ABS interests are no longer outstanding.

Underwriting Standards for Qualifying Commercial Loans, Underwriting Standards for Qualifying CRE Loans, and Underwriting Standards for Qualifying Automobile Loans. Sections 244.16, 244.17, and 244.18 of Regulation RR and sections 246.16, 246.17, and 246.18 of the SEC's credit risk retention rule each require that the depositor of an asset-backed security certify that it has evaluated the effectiveness of its internal supervisory controls and concluded that its internal supervisory controls are effective. The sponsor is required to provide a copy of the certification to potential investors prior to the sale of asset-backed securities in the issuing entity, and the sponsor must promptly notify the holders of the asset-backed securities of any loan included in the transaction that is required to be cured or repurchased by the sponsor, including the principal amount of such loan and the cause for such cure or repurchase. Additionally, a sponsor must retain the disclosures required in sections 244.16(a)(8), 244.17(a)(10), and 244.18(a)(8) of Regulation RR or sections 246.16(a)(8), 246.17(a)(10), and 246.18(a)(8) of the SEC's credit risk retention rule, as applicable, in its records until three years after all ABS interests are no longer outstanding.

Legal authorization and confidentiality: The FR RR is authorized pursuant to section 15G of the Securities Exchange Act, which authorizes the Board, jointly with the Office of the Comptroller of the Currency (OCC), Federal Deposit Insurance Corporation (FDIC), and SEC, to prescribe risk retention regulations (15 U.S.C. 78o-11). The FR RR is mandatory.

The FR RR contains recordkeeping and disclosure requirements that are not submitted to the Board, so the issue of confidentiality will not normally arise. If the Board's examiners retain a copy of the records as part of an examination, the records may be exempt from disclosure under exemption 8 of the Freedom of Information Act, which exempts from disclosure matters that are ''contained in or related to examination, operating, or condition reports prepared by, on behalf of, or for the use of an agency responsible for the regulation or supervision of financial institutions'' (5 U.S.C. 552(b)(8)).

Consultation outside the agency: The credit risk retention rule was adopted on an interagency basis. The Board consulted with the OCC, FDIC, and SEC with respect to the proposed extension, without revision, of this collection of information.

Board of Governors of the Federal Reserve System, September 24, 2019.

Michele Taylor Fennell,

Assistant Secretary of the Board.

[FR Doc. 2019–21064 Filed 9–27–19; 8:45 am]

BILLING CODE 6210–01–P

GENERAL SERVICES ADMINISTRATION

[OMB Control No. 3090–0306; Docket No. 2019–0001; Sequence No. 4]

General Services Administration Acquisition Regulation; Submission for OMB Review; Transactional Data Reporting

AGENCY: Office of Acquisition Policy, General Services Administration (GSA).

ACTION: Notice of request for comments regarding an extension to an existing OMB clearance.

SUMMARY: Under the provisions of the Paperwork Reduction Act, the Regulatory Secretariat Division is submitting a request to the Office of Management and Budget (OMB) to review and approve an extension of a previously approved information collection requirement regarding General Services Administration Acquisition Regulation (GSAR) clauses related to Transactional Data Reporting. GSA uses this information to establish price reasonableness on certain Government-wide contracts, inform category management activities, collect fees due from buying agencies, and administer the respective programs.

DATES: Submit comments on or before: October 30, 2019.

ADDRESSES: Submit comments identified by Information Collection 3090–0306, Transactional Data Reporting, by any of the following methods:

- *Regulations.gov: http://www.regulations.gov.* Submit comments via the Federal eRulemaking portal by searching the OMB control number. Select the link ''Submit a Comment'' that corresponds with ''Information Collection 3090–0306, Transactional Data Reporting.'' Follow the instructions provided at the ''Submit a Comment'' screen. Please include your name, company name (if any), and ''Information Collection 3090–0306, Transactional Data Reporting'' on your attached document.
- *Mail:* General Services Administration, Regulatory Secretariat Division (MVCB), 1800 F Street NW, Washington, DC 20405. ATTN: Ms. Mandell/IC 3090–0306, Transactional Data Reporting.

Instructions: Please submit comments only and cite Information Collection 3090–0306, Transactional Data Reporting, in all correspondence related to this collection. All comments received will be posted without change to *http://www.regulations.gov,* including any personal and/or business confidential information provided.

FOR FURTHER INFORMATION CONTACT: Mr. Matthew McFarland, Office of Acquisition Policy, 301–758–5880 or *matthew.mcfarland@gsa.gov.*

SUPPLEMENTARY INFORMATION:

A. Purpose

Transactional data is generated when a transaction is made between a buyer and seller and shows details of transactions at the line-item level, such as descriptions, quantities, and the prices paid for the items purchased. The Government is increasingly using this data to gain insight into its purchasing patterns, allowing it to identify the most efficient solutions, channels, and sources to meet its mission critical needs. This data is particularly critical to the Government's use of category management, the business practice of buying common goods and services as an enterprise to eliminate redundancies, increase efficiency, and deliver more value and savings from acquisition programs. Moreover, individual buyers benefit from this data when conducting market research, price analysis, and negotiations.

Transactional data is typically possessed by the buyer and seller in a transaction. On the Government (buyer) side, this data is often found in contract writing systems and financial systems. However, these systems are not shared across agencies; in fact, some agencies use multiple versions of these systems. Hence, no mechanism currently exists to compile and analyze transactional data from a wide-range of purchases made across the Government.

GSA sought to improve the Government's access to this data through the Transactional Data Reporting (TDR) final rule, published on June 23, 2016.[1] The rule amended the General Services Administration Acquisition Regulation (GSAR) by establishing two contract clauses requiring contractors to report transactional data from orders placed against GSA's Government-wide contract vehicles:

- Alternate I of GSAR clause 552.238–80 Industrial Funding Fee and Sales Reporting has been introduced to the Federal Supply Schedule (FSS) program on a pilot basis, along with corresponding reductions to existing pricing disclosure requirements.
- GSAR clause 552.216–75 Transactional Data Reporting is applicable to GSA's Government-wide Acquisition Contract (GWAC) and other Government-wide indefinite-delivery indefinite-quantity (IDIQ) contract vehicles established after June 23, 2016.[2] As of May 2019, Alliant 2 (unrestricted) is the only vehicle in this class that has been required to, and is using, the TDR clause.

This information collection primarily applies to GSA's FSS contracts, commonly known as GSA Schedules or Multiple Award Schedules (MAS). These Government-wide contracts provide federal agencies with a simplified process for acquiring commercial supplies and services. The GSA FSS program is the Government's preeminent commercial contracting vehicle, accounting for about 10 percent of all federal contract dollars with approximately $33 billion of purchases made through the program in fiscal year 2018.

GSA establishes the pricing and terms of each GSA Schedule contract with its contract holders. Federal agencies then follow GSA's competitive procedures when placing orders against these contracts and thereby satisfy statutory competition requirements to provide ''the lowest overall cost alternative to meet the needs of the Federal Government.''[3] In turn, those agencies must pay an Industrial Funding Fee (IFF) that covers GSA's costs of operating the FSS program. The fee is currently set at 0.75 percent and is included in the prices ordering activities pay contractors when purchasing from an FSS contract.[4] FSS contractors then report GSA Schedule sales data and remit the IFF collected from ordering activities to GSA once a quarter.

There were a total of 16,215 FSS contracts in fiscal year 2018. This information collection pertains to the 2,063 contracts that participated in the TDR pilot. The remaining 14,152 contracts are subject to legacy sales reporting requirements and pricing disclosure requirements associated with Commercial Sales Practices (CSP) and GSAR clause 552.238–81 Price Reductions, otherwise known as the Price Reductions Clause (PRC); those requirements are accounted for under separate information collection identified by OMB control number 3090–0235.[5]

[1] See GSAR Case 2013–G504; Docket 2014–0020; Sequence 1 [81 FR 41104 (June 23, 2016)].

[2] The rule does not apply to FSS contracts administered by the Department of Veterans Affairs.

[3] 41 U.S.C. 152(3)(B) requires FSS ordering procedures to ''result in the lowest overall cost alternative to meet the needs of the Federal Government.''

[4] The IFF for Schedule 599, Special Item Number 599–2 is $1.50 per transaction.

[5] The PRC was formerly found at GSAR 552.238–75 but was amended to GSAR 552.238–81 per GSAR case 2016–G502, effective May 23, 2019. See 84 FR 17030 from April 23, 2019.

GSA believes TDR offers a meaningful burden reduction for FSS contractors. GSA estimates the combined burden of this information collection is 50 percent less per contract than the legacy sales reporting requirements and CSP and PRC disclosures associated with OMB control number 3090–0235. GSA estimates if all FSS contractors participated in TDR, they would realize an estimated annual burden reduction of $64.6 million.[6] On the other hand, GSA estimates ending the FSS pilot will cost participating contractors nearly $22.6 million and GSA approximately $3 million to transition to the legacy sales reporting and CSP and PRC disclosure requirements unless an alternate method is created to collect the IFF, monitor program sales and establish and monitor contract pricing.[7]

The Paperwork Reduction Act generally requires information collections to be renewed every three years.[8] Both this information collection (OMB control number 3090–0306) and the information collection associated with legacy sales reporting and CSP and PRC disclosure requirements (OMB control number 3090–0235) were last approved in 2016, so GSA is now obtaining extensions to both information collections.[9]

This request for comments only pertains to the information collection requirements associated with TDR (OMB control number 3090–0306). GSA has also published a separate notice requesting comments on the information collection associated with legacy sales reporting and CSP and PRC disclosure requirements (OMB control number 3090–0235) elsewhere in this issue of the **Federal Register**.

Information Collection Changes and Updates

Adjustments for Actual Number of Contracts: The TDR pilot had yet to launch when these burden estimates were previously calculated in 2016, so GSA based its estimates for the number of contracts that would participate on the total number of contracts under the Schedules and Special Item Numbers eligible for the pilot:

- The ratio of GSA Schedule contracts that would continue to require legacy sales reporting and CSP and PRC disclosures was estimated to be 56.8 percent, which was based on the percentage of the program's sales in fiscal year 2015 for contracts that would not be eligible to participate in the TDR pilot.
- The ratio of GSA Schedule contracts slated to be included in the TDR pilot was estimated to account for the remaining 43.2 percent.

However, pilot participation became optional in 2017 and the number of contracts that eventually joined the pilot was far lower than anticipated in 2016. Of the 16,215 contracts that were active in FY 2018—

- 14,152 contracts, or 87.28 percent of the total, were required to conduct legacy sales reporting and provide CSP and PRC disclosures.
- 2,063 contracts, or 12.72 percent of the total, participated in the TDR pilot.

Additionally, only one non-FSS contract vehicle, Alliant 2 (unrestricted), currently uses the non-FSS TDR clause. The last revision of these burden estimates relied upon the total number of non-FSS contracts (537) that would be eligible had they been awarded after the TDR rule was promulgated. As a result, the number of non-FSS contracts was lowered from 537 to the actual number of contracts using the applicable clause, 53.

Accordingly, the revised participation figures resulted in significantly lower burden estimates for this information collection. On the other hand, the FSS pilot participation revisions resulted in significantly higher burden estimates for the information collection accounting for CSP and PRC disclosures and legacy sales reporting (OMB Control Number 3090–0235).

Revised Labor Rates: The previous burden estimates used a fully burdened labor rate of $68/hour. This included a $50/hour base rate, which was based on professional judgment, and 36 percent for fringe benefits, which was rounded down from the 36.25 percent fringe benefit factor included in OMB Circular A–76. The revised burden estimates attempt to align with the Department of Defense's Regulatory Cost Analysis Tool (RCAT), which was developed to prepare economic analyses in compliance with Executive Order 13771 and uses various Government labor category rates as the basis for cost estimates. As such, GSA determined—

- The GS–12, Step 5 labor rate from the RCAT ($55.19/hour) was the most appropriate for the tasks performed by contractors to comply with monthly reporting requirements; and
- The GS–14, Step 5 labor rate from the RCAT ($77.25/hour) was the most appropriate for the tasks performed by contractors to comply with the initial setup.

B. Annual Reporting Burden

This information collection applies to GSA FSS contracts that include GSAR clauses 552.216–75 Transactional Data Reporting and 552.238–80 Industrial Funding Fee and Sales Reporting, Alternate I. In FY 2018, contractors held 53 Alliant 2 contracts subject to clause 552.216–75 and 2,063 GSA FSS contracts subject to Alternate I of GSAR clause 552.238–80.

Both clauses require contractors to report the data elements outlined in each clause, such as item descriptions and prices paid, to a GSA website. This data must be reported monthly within 30 calendar days after the end of each calendar month, meaning contractors will furnish 12 reports over the course of a year for each contract containing one of these clauses. Vendors also remit applicable fees, such as the IFF for Schedule contracts, when submitting these reports.

Cost Burden Calculation

The two primary activities associated with this information collection are the initial setup and monthly reporting. GSA calculated the cost burden for each as follows:

- *Initial Setup:* The duties required for these activities will generally be completely by a senior-level subject matter expert. For the purposes of establishing an hourly rate, GSA equates these duties to those of a GS–14, Step 5 employee, whose hourly rate in 2019 for the ''Rest of U.S.'' locality is $56.92

[6] The estimated burden for this information collection, which applied to the 14,152 contracts not participating in the TDR pilot, is estimated to be $128 million. This equates to a per-contract burden of $9,049/year. The estimated burden for the TDR information collection is $9.2 million/year for the 2,063 contracts participating in the FSS pilot; this equates to a per-contract the burden of $4,483/year. The estimated $64.6 million/year burden reduction is calculated by taking the updated 3090–0235 burden estimate ($128 million/year) and subtracting the product of the number of contracts included in 3090–0235 multiplied by the average per-contract burden of TDR (14,152 contracts × $4,483), which equals $63.4 million/year ($128M − $63.4M = $64.6M). More information about the FSS Pricing Disclosures and Sales Reporting can be found under Information Collection 3090–0235 at *http://www.reginfo.gov/public* by searching ''ICR'' for ''3090–0235''.

[7] Vendors transitioning back to the CSP/PRC framework would have to submit CSPs to establish basis of award pricing. As of December 2018, 2,158 contractors were participating in the TDR pilot. Using the framework for new offer CSPs in this information collection, 2,158 new offer CSPs would equate to a burden of $19.5 million. This same framework would show increased costs of $3 million for GSA to process 2,158 new offer CSPs. Additionally, these contractors would also need to establish sales tracking systems to comply with the sales reporting requirements of the basic version of GSAR clause 552.238–80. Using the sales reporting cost estimation framework for establishing new systems from OMB control number 3090–0235, this would cost these contractors $3.1 million.

[8] 44 U.S.C. 3507(g).

[9] GSA is consolidating a separate information collection for IFF and sales reporting (OMB control number 3090–0121) with the pricing disclosures information collection (OMB control number 3090–0235) because the burdens are interdependent.

an hour.[10] When factoring a 36.25 percent overhead rate for fringe benefits, the fully burdened rate is $77.55 an hour.[11]

• *Quarterly Reporting:* The duties required for these activities will generally be completed by mid-level personnel. For the purposes of establishing an hourly rate, GSA equates these duties to those of a GS–12, Step 5 employee, whose hourly rate in 2019 for the ''Rest of U.S.'' locality is $40.51 an hour. When factoring a 36.25 percent overhead rate for fringe benefits, the fully burdened rate is $55.19 an hour.

Categorization of Vendors by Monthly Sales Revenue: TDR imposes a progressive burden—one that increases with a contractor's sales volume. Monthly reporting times increase with a contractor's applicable sales volume, as contractors with lower to no reportable sales spend relatively little time on monthly reporting, while those with more reportable sales with face a higher reporting burden.

GSA separated contractors into categories based on annual sales volume in order to account for the differences in reporting burden. These categories are:

- Category 1: No sales activity (annual of $0)
- Category 2: Annual sales between $0 and $25,000
- Category 3: Annual sales between $25,000 and $250,000
- Category 4: Annual sales between $250,000 and $1 million
- Category 5: Annual sales over $1 million

The distribution of contractors by sales category is as follows:

FSS AND NON-FSS VENDORS BY SALES CATEGORY

	FSS vendors (count)	FSS vendors (percentage)	Non-FSS vendors (count)	Non-FSS vendors (percentage)	Total vendor count by category
Category 1	318	15	37	70	355
Category 2	197	10	0	0	197
Category 3	619	30	0	0	619
Category 4	407	20	2	4	409
Category 5	522	25	14	26	536
Total	2,063	100	53	100	2,116

Automated vs. Manual Reporting Systems: Vendors subject to these clauses must create systems or processes to produce and report accurate data. Generally, contractors will use automated or manual systems to identify the transactional data to be reported each month. An automated system is one that relies on information technology, such as an accounting system or data management software, to identify and compile reportable data. These systems can tremendously streamline the reporting process but require upfront configuration to perform the tasks, such as coding the data elements to be retrieved. Conversely, a manual system is one that incorporates little to no automation and instead relies on personnel to manually identify and compile the reportable data. An example of a manual system would be an accountant reviewing invoices to identify the reportable data and then transferring the findings to a spreadsheet. In contrast to automation, a manual system requires relatively little setup time but the reporting effort will generally increase with the contractor's sales volume.

The likelihood of a contractor adopting an automated system increases with their applicable sales volume. Vendors with little to no reportable data are unlikely to expend the effort needed to establish an automated reporting system since it will be relatively easy to identify and report a limited amount of data. In fiscal year 2018, 15 percent of FSS contracts in the TDR pilot had $0 sales, while another 10 percent reported annual sales between $1 and $25,000 per month. However, as a contractor's applicable average monthly sales increase, it will be increasingly likely to establish an automated system to reduce the monthly reporting burden. Consequently, contractors with higher reportable sales will likely bear a higher setup burden to create an automated system, or absorb a high monthly reporting burden if they choose to rely on manual reporting methods.

The following chart depicts the likelihood of the current population adopting manual and automated reporting systems:

VENDORS BY REPORTING SYSTEM TYPE (MANUAL VS. AUTOMATED)

	Manual system (percentage)	Automated system (percentage)	Manual system—vendor count	Automated system—vendor count
Category 1	100	0	355	0
Category 2	100	0	197	0
Category 3	90	10	557	62
Category 4	50	50	205	205
Category 5	10	90	54	482
Total Count of Vendors by System Type			1,367	749

[10] General Schedule (GS) labor rates may be viewed on the Office of Personnel Management (OPM) under Pay & Leave: Salaries and Wages, SALARY TABLE 2019–RUS at *https://www.opm.gov/policy-data-oversight/pay-leave/salaries-wages/salary-tables/19Tables/html/RUS_h.aspx.*

[11] 36.25% overhead rate was used in reference to Office of Management and Budget (OMB) Circular No. A–76. Circular A–76 requires agencies to use standard cost factors to estimate certain costs of Government performance. These cost factors ensure that specific government costs are calculated in a standard and consistent manner to reasonably reflect the cost of performing commercial activities with government personnel.

VENDORS BY REPORTING SYSTEM TYPE (MANUAL VS. AUTOMATED)—Continued

	Manual system (percentage)	Automated system (percentage)	Manual system—vendor count	Automated system—vendor count
Percentage of Vendors by System Type			65	35

Initial Setup: Vendors complying with this rule will absorb a one-time setup burden to establish reporting systems. The estimated setup time varies between automated and manual reporting systems. Vendors implementing a manual system must acclimate themselves with the new reporting requirements and train their staff accordingly, while those with automated systems must perform these tasks in addition to configuring information technology resources. GSA estimates the average one-time setup burden is 8 hours for contractors with a manual system and 240 hours for those with an automated system.

Monthly Reporting: After initial setup, contractors subject to these clauses are required to report sales within 30 calendar days after the end of each calendar month. The average reporting times vary by system type (manual or automated) and by sales categories. GSA estimates contractors using a manual system will have average monthly reporting times ranging from 15 minutes (0.25 hours) for contractors with $0 sales to an average of 48 hours for contractors with monthly sales over $1 million. On the other hand, GSA projects contractors with automated systems will have reporting times of 2 hours per month, irrespective of monthly sales volume, as a result of efficiencies achieved through automated processes. The following table shows GSA's projected monthly reporting times per sales category and system type:

MONTHLY REPORTING HOURS BY SYSTEM TYPE AND CATEGORY

	Manual systems	Automated systems
Category 1	0.25	2.00
Category 2	2.00	2.00
Category 3	4.00	2.00
Category 4	16.00	2.00
Category 5	48.00	2.00

FSS Burden Estimates: A total of 376 FSS contracts joined the TDR pilot in FY 2018, including 139 newly awarded contracts and 237 existing contracts that voluntarily joined the pilot. The initial setup burden was split between manual and automated systems, the number of which was estimated based on the ratio for all pilot contracts (64% manual, 36% automated). The initial setup burden for those contracts is illustrated below:

Initial Setup

Annual Burden (Hours): 34,412

Annual Burden (Cost): $2,668,613

Transactional data was reported for 2,063 FSS contracts in FY 2018. As previously noted, the reporting burden for contractors using manual systems increases with their reported sales, while the reporting burden for contractors using automated systems remains constant regardless of the reported sales volume. The reporting burden for those contracts is illustrated below:

Quarterly Reporting

Annual Burden (Hours): 119,207

Annual Burden (Cost): $6,579,023

Non-FSS Burden Estimates: The only non-FSS contract vehicle currently using the clause is the Alliant 2 unrestricted contract. 53 Alliant 2 contracts were awarded in FY 2018, meaning each of the contract holders incurred initial setup costs. The initial setup burden was split between manual and automated systems, the number of which was estimated based on the ratio for the Alliant 2 contracts (74% manual, 26% automated). The initial setup burden for those contracts is illustrated below:

Initial Setup

Annual Burden (Hours): 3,672

Annual Burden (Cost): $284,764

As previously noted, the reporting burden for contractors using manual systems increases with their reported sales while the reporting burden for contractors using automated systems remains constant regardless of the reported sales volume. The reporting burden for those contracts is as follows:

Quarterly Reporting

Annual Burden (Hours): 1,445

Annual Burden (Cost): $79,772

Total Annual Burden

The total estimated burden imposed by TDR is as follows:

Estimated Annual Time Burden (Hours)

FSS Vendors: 153,619

Non-FSS Vendors: 5,117

Total Annual Time Burden: 158,736

Estimated Annual Cost Burden

FSS Vendors: $9,247,636

Non-FSS Vendors: $364,535

Total Annual Cost Burden: $9,612,171

C. Public Comments

An initial notice of request for comments regarding the extension of this information collection was published in the **Federal Register** at 84 FR 24512 on May 28, 2019. GSA sought comments regarding (1) whether this information collection is necessary and has practical utility, and (2) if GSA's estimate of the collection burden is accurate, and based on valid assumptions and methodology. In response, GSA received comment letters from immixGroup, Inc. (immixGroup), the GSA Office of Inspector General (GSA OIG, and the Coalition for Government Procurement (The Coalition).

immixGroup's letter, dated July 24, 2019, addressed this information collection. The GSA OIG's letter, dated July 26, 2019, expressly provided comments for this information collection and the FSS Pricing Disclosures and Sales Reporting information collection (OMB control number 3090–0235). The Coalition's letter, dated July 29, 2019, is limited to this information collection, although they provided a separate letter with comments on the FSS Pricing Disclosures and Sales Reporting information collection (OMB control number 3090–0235). GSA is providing responses to FSS Pricing Disclosures and Sales Reporting in documents associated with the extension of that information collection (OMB control number 3090–0235).

The following are summaries of the respondents' comments related to this information collection, grouped by subject matter, and GSA's responses:

Burden Estimates

Comments: immixGroup and the Coalition commented on GSA's burden estimates. immixGroup stated the initial setup took about half the time estimated by GSA and noted it takes them four hours to complete monthly reporting requirements. The Coalition, on the other hand, stated three of GSA's reporting burden assumptions are invalid—

- The monthly reporting burden for TDR is largely alleviated through

automated systems: The Coalition stated they conducted a survey among their members in 2015 and the respondents, all of which would fall into GSA's Category 5 of contractors (Schedule sales over $1 million), estimated the monthly reporting burden to be 68 hours, even when using automated systems.

• Contractor employees responsible for the initial setup are paid at a fully burdened labor rate of $77.55/hour: The Coalition estimated this cost to be an average of $140/hour.

• The number of companies accepting TDR will remain constant year to year: The Coalition noted GSA is currently consolidating the Schedules into a single solicitation; if the current scope of the pilot remains unchanged, this would allow almost 400 more contractors to join the pilot.

GSA Response: GSA believes its burden estimates are valid and the comments underscore the fact that the burden varies widely by contractor, which is why GSA separated the reporting burden by sales volume and reporting system (automated vs. manual).

GSA's estimates for the automated and manual categories are intended to be an average within that category. For example, immixGroup holds 2 of the 12 pilot contracts with FY 2018 sales exceeding $100 million, while the other 510 contracts under Category 5 each had less than $100 million in sales, including 172 contracts with sales between $1 million and $2 million. GSA believes a contractor with sales similar to those of immixGroup would have a reporting burden toward the higher end of the population of Category 5 contractors. Likewise, GSA believes some contractors will have a higher reporting burden than that shared by immixGroup, such as those reported by the Coalition's members in 2015, but GSA also estimates most Category 5 contractors using automated systems will have a lower burden. Consequently, GSA believes its estimate is representative of the average Category 5 reporting burden.

GSA also believes the labor rates provided by the Coalition are significantly higher than those typically paid by contractors to fulfill these functions. GSA believes these functions are typically performed by accounting staff with occasional assistance from higher-paid professionals, such as attorneys and consultants. The most comparable labor category for the accounting staff analyzed by the Bureau of Labor Statistics (BLS) are accountants and auditors (13–2011). BLS's most recently published mean hourly rate for this category was $37.89/hour;[12] when factoring a 36.25 percent overhead rate for fringe benefits, the fully burdened rate is $51.63 an hour.[13] However, GSA chose to use the higher $77.55/hour rate to account for the occasional involvement of higher-paid professionals.

Finally, GSA acknowledges pilot participation may increase by the number of contractors estimated by the Coalition, but also notes that it is difficult to forecast future pilot participation because it is uncertain how many of those contractors would join the pilot if given the opportunity. On the other hand, a historical average would be skewed because most pilot contractors joined within the pilot's first year. As a result, the number of contractors that joined the pilot in the last fiscal year (FY 2018) is the most representative figure to use for the current burden estimate.

TDR Pilot Continuation

Comments: The GSA OIG questioned why GSA is continuing the TDR pilot beyond FY 2019, stating GSA has yet to include transactional data in its pricing analyses and decisions and TDR has yet to have an impact on order-level outcomes. Conversely, the Coalition and immixGroup stated TDR is less burdensome than CSP and PRC disclosures and reverting back to CSP and PRC disclosures if the TDR pilot is discontinued would be extremely burdensome.

GSA Response: GSA's premise has been TDR can meet or exceed the CSP and PRC's value while supporting better buying outcomes and reducing contractor reporting burden. Two-thirds of the way through the pilot, TDR has proven to be a less burdensome alternative, has had no adverse impact on contract-level pricing, and is starting to be used by contracting officers and category managers to improve buying outcomes. Accordingly, GSA has decided to continue the pilot through FY 2020 while it focuses on consolidating all 24 Schedules into one single Schedule. This decision removes uncertainty for contract partners and allows them to plan accordingly.

TDR Alternatives

Comments: immixGroup stated neither TDR or the Price Reductions clause (PRC) and Commercial Sales Practices (CSP) have much utility when technology enables the acquisition workforce to comparison shop and review pricing data, but applauds GSA for moving to TDR in lieu of the more burdensome legacy PRC and CSP requirements.

The Coalition recommends GSA reduce its reliance on TDR, the PRC and CSP and instead rely on market competition to reduce prices. The Coalition also recommends GSA seek technological solutions, such investing in automated systems and upgrading its existing ordering tools, rather than relying on a regulatory solution such as TDR.

Finally, the GSA OIG stated the CSP and PRC are needed for GSA to meet its statutory pricing obligations. They argued TDR ''severs the link to the commercial marketplace'' and is ineffective because it has not met its stated objectives or effectively replaced the CSP and PRC as pricing tools.

GSA Responses: GSA believes TDR, in conjunction with other horizontal pricing techniques, will be a superior method of ensuring FSS ordering procedures ''result in the lowest overall cost alternative to meet the needs of the Federal Government,'' as required by 41 U.S.C. 152(3)(B). To date, the TDR pilot has lowered industry burden while maintaining the Schedule pricing position. Additionally, contracting officers and category managers are beginning to use the data and GSA is continuously improving TDR data analytics.

Pilot Participation

Comments: immixGroup and the Coalition commented on pilot participation. immixGroup stated the pilot is more popular than the participation figures indicate because only certain Special Item Numbers are eligible for the pilot. Additionally, the Coalition recommended ''that GSA provide TDR as an option for all Schedule holders, in place of PRC compliance and submission of the CSP, so that each contractor has the opportunity to make a business decision about the least burdensome, least costly, and most efficient compliance mechanism under the Schedules program.''

GSA Response: GSA has decided to extend the TDR pilot through FY 2020 while maintaining the current scope. This will enable GSA to focus on consolidating all 24 Schedules into one

[12] *See* the Bureau of Labor Statistics Occupational Employment and Wages for Compliance Officers, *available at https://www.bls.gov/oes/current/oes132011.htm.*

[13] 36.25% overhead rate was used in reference to Office of Management and Budget (OMB) Circular No. A–76. Circular A–76 requires agencies to use standard cost factors to estimate certain costs of Government performance. These cost factors ensure that specific government costs are calculated in a standard and consistent manner to reasonably reflect the cost of performing commercial activities with government personnel.

single Schedule and enable contractors and the GSA acquisition workforce to spend their resources understanding and participating in the consolidated Schedule. Additionally, maintaining the pilot's current scope will allow GSA to understand the implications of the new consolidated Schedule environment on TDR.

The Government Already Possesses the Data

Comments: immixGroup noted GSA acknowledges the data it collects through TDR also exists in Government contract writing and financial systems and therefore asked, ''if agencies are unwilling to share their transactional data with GSA, how is it that we, as contractors, should feel comfortable doing so?''

The Coalition stated they are ''. . . concerned that the Government already possesses the data that it is requesting through TDR. Furthermore, TDR, which focuses on transactions for commercial products, has limited utility for services and solutions which comprise almost 70 percent of spending under the Schedules program.''

GSA Response: Agencies are not unwilling to share transactional data with GSA. Instead, a lack of system interoperability prevents GSA from harvesting the transactional data residing on the multitude of contract writing and financial systems used across the Government. GSA explored several alternatives for obtaining transactional data prior to publishing the final rule in 2016—internal applications; GSA ordering platforms such as eBuy and GSA Advantage!®; the SmartPay credit card purchase program; upgrades to the Federal Procurement Data System; and the Government electronic invoicing initiative. GSA concluded in 2016 these options would not provide the breadth of data needed to support the Government's objectives or would be unable to do so in the foreseeable future, and this remains the case in 2019.

In regards to using data from services and solutions, GSA acknowledges transactional data is most useful for price analysis when comparing like items, but this does not mean the data is not useful for services and solutions. Government buyers and FSS contracting officers will still use the data for price analysis and market research, and category managers will use the data for consumption analysis to form demand management strategies, regardless of whether the data can be used for perfect comparisons. An example is the ability to compare labor rates across contract vehicles, which is beginning to reduce contract duplication.

Data Usage

Comments: The Coalition and immixGroup expressed concern that transactional data will lead ordering contracting officers to always expect the lowest price paid by the Government, regardless of the terms, quantities purchased, or other circumstances that affect the prices offered on those orders. The Coalition also stated a lowest price expectation may cause the Government to favor cheaper products IT products that are more susceptible to cyber risks.

With respect to order-level price negotiations, the Coalition recommended the Government standardize the way it conducts horizontal price comparisons because they are concerned there will be ''wide variations in practices for horizontal price comparisons across, and even within, agencies. This lack of consistency will increase contract administration costs for industry.'' Regarding contract-level price negotiations, the Coalition stated, ''GSA should acknowledge that while negotiating Schedule contracts the terms and conditions of the order will dictate the price.''

Finally, the Coalition stated GSA should provide agencies guidance on gray market and counterfeit items, which could be low-price outliers and skew price comparisons.

GSA Response: Contracting officers will continue to conduct acquisitions in accordance with the Federal Acquisition Regulation, which states a preference for ''best value'' solutions.[14] Moreover, GSA instructs its contracting officers to take into account whether the data is current, the terms and conditions of the acquisition related to the prices paid, quantities purchased, and other material factors affecting the prices paid, such as blanket purchase agreements, temporary price reductions/promotional prices, and differing labor qualifications.

Regarding gray market and counterfeit items, transactional data prevents, rather than promotes, procurement of these items, as the data helps GSA identify and subsequently remove these items from the Schedules marketplace.

Finally, additional public comments are particularly invited on: Whether this collection of information is necessary and whether it will have practical utility; whether our estimate of the public burden of this collection of information is accurate, and based on valid assumptions and methodology; ways to enhance the quality, utility, and clarity of the information to be collected.

Obtaining Copies of Proposals: Requesters may obtain a copy of the information collection documents from the General Services Administration, Regulatory Secretariat Division (MVCB), 1800 F Street NW, Washington, DC 20405, telephone 202–501–4755. Please cite Information Collection 3090–0306, Transactional Data Reporting, in all correspondence.

Jeffrey A. Koses,

Senior Procurement Executive, Office of Acquisition Policy, Office of Government-wide Policy.

[FR Doc. 2019–21254 Filed 9–27–19; 8:45 am]

BILLING CODE 6820–61–P

[14] Federal Acquisition Regulation section 1.102 (48 CFR 1.102).

GENERAL SERVICES ADMINISTRATION

[OMB Control No. 3090–0235; Docket No. 2019–0001; Sequence No. 1]

General Services Administration Acquisition Regulation; Submission for OMB Review; Federal Supply Schedule Pricing Disclosures and Sales Reporting

AGENCY: Office of Acquisition Policy, General Services Administration (GSA).

ACTION: Notice of request for comments regarding an extension to an existing OMB clearance.

SUMMARY: Under the provisions of the Paperwork Reduction Act, the Regulatory Secretariat Division is submitting a request to the Office of Management and Budget (OMB) to review and approve an extension of a previously approved information collection requirement regarding Commercial Sales Practices disclosures and the General Services Administration Acquisition Regulation (GSAR) clause regarding price reductions. The information collected is used to establish and maintain Federal Supply Schedule (FSS) pricing and price-related terms and conditions. The extension has been renamed ''Federal Supply Schedule Pricing Disclosures and Sales Reporting'' because it now includes a burden estimate associated with the basic version of the GSAR clause regarding industrial funding fee and sales reporting. GSA uses this information to collect the Industrial Funding Fee and administer the FSS program. This burden was included under a separate approved information collection identified by OMB control number 3090–0121.

DATES: Submit comments on or before: October 30, 2019.

ADDRESSES: Submit comments identified by Information Collection 3090–0235, Federal Supply Schedule Pricing Disclosures and Sales Reporting, by any of the following methods:

- *Regulations.gov: http://www.regulations.gov.* Submit comments via the Federal eRulemaking portal by searching the OMB control number. Select the link ''Submit a Comment'' that corresponds with ''Information Collection 3090–0235, Federal Supply Schedule Pricing Disclosures and Sales Reporting.'' Follow the instructions provided at the ''Submit a Comment'' screen. Please include your name, company name (if any), and ''Information Collection 3090–0235, Federal Supply Schedule Pricing Disclosures and Sales Reporting'' on your attached document.
- *Mail:* General Services Administration, Regulatory Secretariat Division (MVCB), 1800 F Street NW, Washington, DC 20405. ATTN: Ms. Mandell/IC 3090–0235, Federal Supply Schedule Pricing Disclosures.

Instructions: Please submit comments only and cite Information Collection 3090–0235, Federal Supply Schedule Pricing Disclosures and Sales Reporting, in all correspondence related to this collection. All comments received will be posted without change to *http://www.regulations.gov,* including any personal and/or business confidential information provided.

FOR FURTHER INFORMATION CONTACT: Mr. Matthew McFarland, Office of Acquisition Policy, 301–758–5880 or *matthew.mcfarland@gsa.gov.*

SUPPLEMENTARY INFORMATION:

A. Purpose

GSA's Federal Supply Schedules, commonly known as GSA Schedules or Multiple Award Schedules (MAS), are Government-wide contracts providing federal agencies with a simplified process for acquiring commercial supplies and services. The FSS program is the Government's preeminent commercial contracting vehicle, accounting for about 10 percent of all federal contract dollars with approximately $33 billion of purchases made through the program in fiscal year 2018.

GSA establishes the pricing and terms of each GSA Schedule contract with commercial contractors. Federal agencies then follow GSA's competitive procedures when placing orders against these contracts and thereby satisfy statutory competition requirements to provide ''the lowest overall cost alternative to meet the needs of the Federal Government.'' [1] In turn, those agencies must pay an Industrial Funding Fee (IFF) that covers GSA's costs of operating the FSS program. The fee is currently set at 0.75 percent and is included in the prices ordering activities pay contractors when purchasing from an FSS contract.[2] FSS contractors then report GSA Schedule sales data and remit the IFF collected from ordering activities to GSA once a quarter.

There were a total of 16,215 GSA FSS contracts in fiscal year 2018. This information collection pertains to the pricing disclosures and sales reporting requirements for 14,152 of these contracts. The remaining 2,063 contracts participated in the Transactional Data Reporting (TDR) pilot and were subject to a separate information collection identified by OMB control number 3090–0306.

GSA believes TDR offers a meaningful burden reduction for FSS contractors. GSA estimates the combined burden of this information collection is 49 percent more per contract than the TDR burden. If all FSS contractors participated in TDR, rather than being subject to the sales reporting and pricing disclosure requirements of this information collection, they would realize an estimated annual burden reduction of $30.8 million.[3] On the other hand, contractors will absorb costs when reverting back to the requirements of this information collection, including costs associated with establishing a basis of award customer and monitoring system for PRC compliance, if GSA ends the TDR pilot without an alternative means of collecting the IFF, monitoring program sales and establishing and monitoring contract pricing.

The Paperwork Reduction Act generally requires information collections to be renewed every three years.[4] Both this information collection (OMB control number 3090–0235) and the Transactional Data Reporting information collection (OMB control number 3090–0306) were last approved in 2016, so GSA is now obtaining extensions to both information collections. Additionally, GSA is consolidating a separate information collection for IFF and sales reporting (OMB control number 3090–0121) with this information collection because the burdens are interdependent.

This request for comments only pertains to the information collection requirements associated with the basic version of GSAR clause 552.238–80 and CSP and PRC disclosure requirements. GSA has also published a separate notice requesting comments on the Transactional Data Reporting information collection (OMB control number 3090–0306) elsewhere in this issue of the **Federal Register**.

Sales Reporting

General Services Administration Acquisition Regulation (GSAR) clause 552.238–80 Industrial Funding Fee and Sales Reporting is included in every GSA Schedule contract. The basic version of the clause requires contractors to report their FSS contract sales to GSA within 30 days after the end of the quarter. GSA then calculates the IFF due based on the total amount of sales reported and the contractor must also remit that amount within 30 days after the end of the quarter.[5]

FSS Pricing Disclosures

The basic version of GSAR clause 552.238–80 Industrial Funding Fee and Sales Reporting also dictates the pricing procedures GSA will use to establish contract pricing. These pricing procedures require GSA to determine price reasonableness on its FSS contracts by comparing a contractor's prices and price-related terms and conditions with those offered to their other customers. Through analysis and negotiations, GSA establishes a favorable pricing relationship in comparison to one of the contractor's customers (or category of customers) and then maintains that pricing relationship for the life of the contract. In order to carry out this practice, GSA collects pricing information through CSP disclosures and enforces the pricing relationship through the PRC.

[1] 41 U.S.C. 152(3)(B) requires FSS ordering procedures to ''result in the lowest overall cost alternative to meet the needs of the Federal Government.''

[2] The IFF for Schedule 599, Special Item Number 599–2 is $1.50 per transaction.

[3] The estimated burden for this information collection, which applied to the 14,152 contracts not participating in the TDR pilot, is estimated to be $94.2 million. This equates to a per-contract burden of $6,662/year. The estimated burden for the TDR information collection is $9.2 million/year for the 2,063 contracts participating in the FSS pilot; this equates to a per-contract the burden of $4,483/year. The estimated $30.8 million/year burden reduction is calculated by taking the updated 3090–0235 burden estimate ($94.2 million/year) and subtracting the product of the number of contracts included in 3090–0235 multiplied by the average per-contract burden of TDR (14,152 contracts × $4,483), which equals $63.4 million/year ($94.2M—$63.4M = $30.8M). More information about the TDR burden can be found under Information Collection 3090–0306 at *http://www.reginfo.gov/public* by searching ''ICR'' for ''3090–0306''.

[4] 44 U.S.C. 3507(g)

[5] Alternate I of the clause applies to FSS contracts participating in the TDR pilot and falls under the information collection identified by OMB control number 3090–0306.

Commercial Sales Practices (CSP): In accordance with GSAR 515.408(a)(2), offerors must submit information in the Commercial Sales Practices Format provided in the solicitation, following the instructions at GSAR Figure 515.4–2, or submit information in their own format. In addition to when an offer is submitted, CSP disclosures are also required prior to executing bilateral modifications for exercising a contract option period, adding items to the contract, or increasing pricing under the Economic Price Adjustment clause (GSAR 552.216–70).

Price Reductions Clause (PRC): GSAR 538.273 (b)(2) prescribes the PRC for use in all FSS solicitations and contracts. The clause is intended to ensure the Government maintains its price/discount (and/or term and condition) advantage in relation to the contractor's customer (or category of customer) upon which the FSS contract is based. The basis of award customer (or category of customer) is identified at the conclusion of negotiations and noted in the contract. Thereafter, the PRC requires FSS contractors to inform the contracting officer of price reductions within 15 calendar days. Per GSAR 552.238–81(c)(1)a price reduction shall apply to purchases under the contract if, after the date negotiations conclude, the Contractor—

- Revises the commercial catalog, pricelist, schedule or other document upon which contract award was predicated to reduce prices;
- Grants more favorable discounts or terms and conditions than those contained in the commercial catalog, pricelist, schedule or other documents upon which contract award was predicated; or
- Grants special discounts to the customer (or category of customers) that formed the basis of award, and the change disturbs the price/discount relationship of the Government to the customer (or category of customers) that was the basis of award.

FSS ordering procedures are required by law to ''result in the lowest overall cost alternative to meet the needs of the Federal Government.'' [6] CSP disclosures and the PRC provide GSA a mechanism for meeting this objective by giving it insight into a contractor's pricing practices, which is proprietary information that can only be obtained directly from the contractor.

Information Collection Changes and Updates

The burden estimates from the previous approval have been adjusted to include updates to sales reporting estimates previously included under OMB control number 3090–0121; reflect actual participation in the TDR pilot; revised labor rates used to calculate cost estimates; and increases to the heavier lift burdens for PRC compliance systems, CSP pre-award disclosures and CSP option disclosures. The number of respondents and applicable actions has also been updated.

Industrial Funding Fee and Sales Reporting: The basic version of the Industrial Funding Fee and Sales Reporting clause has traditionally been associated with OMB control number 3090–0121, which was last extended in June 2017. GSA determined this information collection should be consolidated with the FSS Pricing Disclosures information collection (OMB control number 3090–0235) because they apply to the same population within the GSA Schedules program.

The estimation methodology for the sales reporting calculations is the same as what was used for the 2017 renewal of OMB control number 3090–0121 except the sales categories were revised to align with those used for the Transactional Data Reporting information collection (OMB control number 3090–0306).

Adjustments for the Transactional Data Reporting Pilot: GSA Schedule contracts included in the TDR pilot are no longer subject to this information collection; the separate reporting requirements for those contracts are covered by OMB control number 3090–0306.

The TDR pilot had yet to launch when these burden estimates were previously calculated in 2016, so GSA based its estimates for the number of contracts that would participate on the total number of contracts under the Schedules and Special Item Numbers eligible for the pilot:

- The ratio of GSA Schedule contracts that would continue under this information collection was estimated to be 56.8 percent, which was based on the percentage of the program's sales in fiscal year 2015 for contracts that would not be eligible to participate in the TDR pilot.
- The ratio of GSA Schedule contracts slated to be included in the TDR pilot was estimated to account for the remaining 43.2 percent.

Consequently, the 2016 burden estimates for the CSP and PRC renewal and the 2017 IFF and sales reporting renewal relied upon these TDR pilot participation projections. However, pilot participation became optional in 2017 and the number of contracts that eventually joined the pilot was lower than anticipated in 2016. Of the 16,215 contracts that were active in FY 2018,

- 14,152 contracts, or 87.28 percent of the total, are subject to this information collection.
- 2,063 contracts, or 12.72 percent of the total, participated in the TDR pilot.

Consequently, the revised participation figures resulted in significantly higher burden estimates for this information collection and lower burden estimates for the Transactional Data Reporting information collection (OMB control number 3090–0306).

Revised Labor Rates: The previous burden estimates used a fully burdened labor rate of $68/hour. This included a $50/hour base rate, which was based on professional judgment, and 36 percent for fringe benefits, which was rounded down from the 36.25 percent fringe benefit factor included in OMB Circular A–76.[7]

The revised burden estimates attempt to align with the Department of Defense's Regulatory Cost Analysis Tool (RCAT), which was developed to prepare economic analyses in compliance with Executive Order 13771 and uses various Government labor category rates as the basis for cost estimates. GSA determined—

- The GS–14, Step 5 labor rate from the RCAT ($77.55/hour) was the most appropriate for the tasks performed by contractors to comply with CSP and PRC disclosure requirements and perform the initial setup for sales reporting systems.
- The GS–12, Step 5 labor rate from the RCAT ($55.19/hour) was the most appropriate for the tasks performed by contractors for quarterly sales reporting.

Increased Heavier Lift Burdens

GSA increased some of its heavier lift burden estimates in response to public comments received in 2019. Previously, the heavier lift calculations for PRC compliance systems and CSP pre-award and options disclosures were generally 15–86 percent higher than the lighter lift estimates for those functions. However, GSA now believes the disparity between a lighter lift and a heavier lift is greater than previously estimated and projects the heavier lift burden for those activities is 5 times greater than the lighter lift estimates. This change

[6] 41 U.S.C. 152(3)(B)

[7] 36.25% overhead rate was used in reference to Office of Management and Budget (OMB) Circular No. A–76. Circular A–76 requires agencies to use standard cost factors to estimate certain costs of Government performance. These cost factors ensure that specific government costs are calculated in a standard and consistent manner to reasonably reflect the cost of performing commercial activities with government personnel.

increases the annual information collection burden estimate by approximately $33 million.

B. Annual Reporting Burden

This information collection applies to GSA FSS contracts that include the basic version of GSAR clause 552.238–80 Industrial Funding Fee and Sales Reporting. In FY 2018, 13,828 contractors held a total of 16,215 GSA FSS contracts; 12,151 of these contractors held a total of 14,152 contracts containing the basic version of clause 552.238–80.[8] These contracts accounted for approximately 77.8 percent of GSA FSS sales in fiscal year 2018. The 2,063 GSA FSS contracts subject to Alternate I of GSAR clause 552.238–80—those participating in the TDR pilot—are covered by a separate information collection identified under OMB control number 3090–0306.

Cost Burden Calculation

Sales Reporting: The two primary activities associated with sales reporting are initial setup and quarterly reporting. GSA calculated the cost burden for each as follows:

- *Initial Setup:* The duties required for these activities will generally be completely by a senior-level subject matter expert. For the purposes of establishing an hourly rate, GSA equates these duties to those of a GS–14, Step 5 employee, whose hourly rate in 2019 for the ''Rest of U.S.'' locality is $56.92 an hour.[9] When factoring a 36.25 percent overhead rate for fringe benefits, the fully burdened rate is $77.55 an hour.[10]
- *Quarterly Reporting:* The duties required for these activities will generally be completed by mid-level personnel. For the purposes of establishing an hourly rate, GSA equates these duties to those of a GS–12, Step 5 employee, whose hourly rate in 2019 for the ''Rest of U.S.'' locality is $40.51 an hour. When factoring a 36.25 percent overhead rate for fringe benefits, the fully burdened rate is $55.19 an hour.

Pricing Disclosures: The duties required for these activities will generally be completed by a senior-level subject matter expert. For the purposes of establishing an hourly rate, GSA equates these duties to those of a GS–14, Step 5 employee, whose hourly rate in 2019 for the ''Rest of U.S.'' locality is $56.92 an hour. When factoring a 36.25 percent rate for fringe benefits, the fully burdened rate is $77.55 an hour.

Heavier Lifts and Lighter Lifts

Due to the diversity among the FSS contractor population, the burden associated with many of the CSP and PRC components of this information collection cannot be equally attributed to all FSS contracts. In these areas, GSA is categorizing contracts into those with a ''heavier lift'' or ''lighter lift.''

FSS contracts are held by a diverse set of companies, which vary in terms of business size, offerings, and FSS sales volume. For example, in FY 2018:

- 30.7 percent, or 4,975 contracts had $0 in reported FSS sales.
- 6.8 percent, or 1,100 contracts, accounted for about 80 percent of all FSS sales.
- The top 20 percent of FSS contracts (in terms of FY 2018 sales) accounted for 94.6 percent of FSS sales.
- Only 19.7 percent of FSS contracts had more than $1 million in FSS sales.
- 68.7 percent of FSS contracts were held by small businesses and had less than $1 million in FSS sales.
- Small businesses held 81 percent of the FSS contracts but accounted for 37 percent of FSS sales.

In general, a contractor's sales volume will have the greatest effect on the associated burden of these requirements, although the number and type of offerings, and business structure, can also be significant factors. As previously shown, a relatively small number of FSS contracts account for the vast majority of FSS sales and therefore likely bear a heavier burden for these requirements. Conversely, the majority of FSS contracts, which are typically held by small businesses with lower sales volume, absorb less of the burden for these requirements.

To account for the differences among FSS contracts, GSA is utilizing the Pareto principle, or ''80/20 rule,'' which states 80 percent of effects comes from 20 percent of the population. Accordingly, GSA is categorizing FSS contracts by those with a heavier lift (20 percent) and those with a lighter lift (80 percent). Contracts with heavier lifts are those with the characteristics leading to increased burden—more sales volume, higher number of contract items, more complex offerings, more transactions, more complex transactions, and/or intricate business structures.

Sales Reporting

The basic version of the Industrial Funding Fee and Sales Reporting clause requires contractors to report their total sales by Special Item Number once a quarter in the 72A Reporting System.[11] Contractors must file these reports within 30 days after the end of each of the following quarters:

- January 1 to March 31
- April 1 to June 30
- July 1 to September 30
- October 1 to December 31

After contractors report their sales, the 72A Reporting System calculates the IFF due for the quarter. The system then prompts users to ''Pay Now'' or ''Pay Later.'' Contractors can remit IFF payments via credit card, online check, or paper check. Regardless of whether a contractor remits the IFF at the time sales are reported or at a later date, the IFF due must be remitted within the same 30 day deadline following the end of the reporting quarters.

Categorization of Vendors by Quarterly Sales Revenue: Sales reporting imposes a progressive burden—one that increases with a contractor's sales volume. Quarterly reporting times will increase with a contractor's applicable sales volume, as contractors with lower to no reportable sales will spend little time on quarterly reporting, while those with more reportable sales with face a higher reporting burden.

GSA separated contracts into categories based on reported annual sales volume in order to account for the differences in reporting burden. These categories are:

- Category 1: No sales activity
- Category 2: Sales between $0 and $25,000
- Category 3: Sales between $25,000 and $250,000
- Category 4: Sales between $250,000 and $1 million
- Category 5: Sales over $1 million

The distribution of contracts by sales category is as follows:

[8] Some contractors hold multiple contracts and may have contracts participating in the TDR pilot and other contracts that are subject to CSP and PRC disclosure requirements.

[9] General Schedule (GS) labor rates may be viewed on the Office of Personnel Management (OPM) under Pay & Leave: Salaries and Wages, SALARY TABLE 2019–RUS at *https://www.opm.gov/policy-data-oversight/pay-leave/salaries-wages/salary-tables/19Tables/html/RUS_h.aspx*

[10] 36.25% overhead rate was used in reference to Office of Management and Budget (OMB) Circular No. A–76. Circular A–76 requires agencies to use standard cost factors to estimate certain costs of Government performance. These cost factors ensure that specific government costs are calculated in a standard and consistent manner to reasonably reflect the cost of performing commercial activities with government personnel.

[11] *https://72a.gsa.gov.*

CONTRACTS BY SALES CATEGORY

	FSS contracts (count)	FSS contracts (percentage)
Category 1	4,657	33%
Category 2	1,188	8%
Category 3	3,469	25%
Category 4	2,168	15%
Category 5	2,670	19%
Total	14,152	100%

Automated vs. Manual Reporting Systems: Vendors subject to these clauses must create systems or processes to produce and report accurate data. Generally, contractors will use automated or manual systems to identify the quarter's reportable sales. An automated system is one that relies on information technology, such as an accounting system or data management software, to identify and compile reportable data. These systems can tremendously streamline the reporting process but require upfront configuration to perform the tasks, such as coding the sales types to be retrieved. Conversely, a manual system is one that incorporates little to no automation and instead relies on personnel to manually identify and compile the reportable data. An example of a manual system would be an accountant reviewing invoices to identify the reportable data and then transferring the findings to a spreadsheet. In contrast to automation, a manual system requires relatively little setup time but the reporting effort will generally increase with the contractor's sales volume.

The likelihood of a contractor adopting an automated system increases with their applicable sales volume. Vendors with little to no reportable data are unlikely to expend the effort needed to establish an automated reporting system since it will be relatively easy to identify and report a limited amount of data. However, as a contractor's applicable sales increase, they will be increasingly likely to establish an automated system to reduce the quarterly reporting burden. Consequently, contractors with higher reportable sales will likely bear a higher setup burden to create an automated system, or absorb a high quarterly reporting burden if they choose to rely on manual reporting methods.

The following chart depicts the likelihood of the population of contracts operating under manual and automated reporting systems:

CONTRACTS BY REPORTING SYSTEM TYPE

[Manual vs. Automated]

	Manual system (percentage)	Automated system (percentage)	Manual system—vendor count	Automated system—vendor count
Category 1	100	0	4,657	0
Category 2	100	0	1,188	0
Category 3	90	10	3,122	347
Category 4	50	50	1,084	1,084
Category 5	10	90	267	2,403
Total Count of Contracts by System Type			10,318	3,834
Percentage of Contracts by System Type			73%	27%

Initial Setup: Vendors with active FSS contracts already have procedures in place to meet these longstanding reporting requirements. However, new FSS contractors will absorb a one-time setup burden to establish reporting systems. The estimated setup time varies between automated and manual reporting systems. Vendors implementing a manual system must acclimate themselves with the new reporting requirements and train their staff accordingly, while those with automated systems must perform these tasks in addition to configuring information technology resources.

GSA estimates the average one-time setup burden is 8 hours for contractors with a manual system and 40 hours for those with an automated system. GSA also attributes the same system type probabilities (manual system 73 percent, automated system 27 percent) to the population of new contractors. These estimates apply to the 1,220 contractors awarded FSS contracts in fiscal year 2018.

Quarterly Reporting: Vendors are required to report sales within 30 calendar days after the end of each quarter. The average reporting times vary by system type (manual or automated) and sales volume. GSA estimates contractors using a manual system have average quarterly reporting times ranging from 15 minutes (0.25 hours) per quarter for contractors with $0 sales to an average of 8 hours per quarter for contractors with quarterly sales over $1 million. On the other hand, GSA projects contractors with automated systems will have reporting times of 2 hours per quarter, irrespective of quarterly sales volume, as a result of efficiencies achieved through automated processes. The following table shows GSA's projected quarterly reporting times per sales category and system type:

QUARTERLY REPORTING HOURS BY SYSTEM TYPE AND CATEGORY

	Manual systems	Automated systems
Category 1	0.25	2.00
Category 2	1.00	2.00
Category 3	2.00	2.00
Category 4	4.00	2.00
Category 5	8.00	2.00

Annualized Public Burden Estimates for Sales Reporting: The burden estimates consist of quarterly reporting times for all 14,152 participating contracts and a one-time setup burden for the 1,220 new contracts:

Quarterly Reporting

Annual Burden (Hours): 90,945.
Annual Burden (Cost): $5,019,255.

Initial Setup

Annual Burden (Hours): 20,336.
Annual Burden (Cost): $1,577,078.

Price Reductions Clause

GSA attributes the PRC-related burden to training, compliance systems, and notifying GSA of price reductions within 15 calendar days after their occurrence.

Training: FSS contractors provide training to their employees to ensure compliance with FSS pricing disclosure requirements. GSA is basing these burden estimates on the number of contractors, not the number of contracts, because contractors with multiple contracts subject to this requirement will likely not have to provide separate training for each contract.

In FY 2018, there were 12,151 contractors subject to PRC notification requirements, 2,830 (20 percent) with a heavier lift and 9,721 (80 percent) with a lighter lift. Vendors within the heavier lift category may need to develop formal training programs and conduct training for numerous divisions and offices, while contractors in the lighter lift category may have no need for training design and administration due to having as few as one person responsible for PRC compliance.

Training—Heavier Lift

Total Annual Responses: 2,430.
Average Hours per Response: 40.
Total Time Burden (Hours): 97,200.
Total Cost Burden: $7,537,860.

Training—Lighter Lift

Total Annual Responses: 9,721.
Average Hours per Response: 20.
Total Time Burden (Hours): 194,420.
Total Cost Burden: $15,077,271.

Compliance Systems: FSS contractors must develop systems to control discount relationships with other customers/categories of customer to ensure the basis of award pricing relationship is not disturbed. In public comments submitted on this information collection renewal in 2016, a respondent stated PRC monitoring burden should be 1,290 hours to establish a compliance system in the first year and 1,100 hours each year thereafter for monitoring activities. However, GSA believes the amount of investment into a compliance system is inversely related to the amount of time needed to carry out ongoing monitoring activities. Specifically, contractors making high upfront investments, such as programming a quotation tool to control discounts, will have a lower ongoing monitoring reporting burden. On the other hand, contractors not making upfront investments to establish a compliance system will have a higher ongoing reporting burden.

GSA previously adopted an average burden of 1,290 hours but allocated it across the 20-year life of a contract for heavier lift contractors using automated systems to carry out monitoring activities, resulting in an annual burden of 65 hours. GSA estimated heavier lift contractors that spend less time implementing an automated system would incur a similar burden for monitoring activities, meaning GSA estimated the same 65 hour/year burden for those contractors. For lighter lift contractors, GSA attributed an average burden of 700 hours for the 20-year life of the contract, which equates to 35 hours a year.

However, GSA decided in 2019 to increase its heavier lift burden estimates after considering public comments. GSA now believes the disparity between a lighter lift and a heavier lift is greater than previously estimated and projects the heavier lift burden for those activities to be 5 times greater than the lighter lift estimates.

Compliance Systems—Heavier Lift

Total Annual Responses: 2,430.
Average Hours per Response: 175.
Total Time Burden (Hours): 425,250.
Total Cost Burden: $32,978,138.

Compliance Systems—Lighter Lift

Total Annual Responses: 9,721.
Average Hours per Response: 35.
Total Time Burden (Hours): 340,235.
Total Cost Burden: $26,385,224.

Price Reduction Notifications: 1,035 price reduction modifications were completed in FY 2018, with each modification requiring a notification from the contractor. In a survey conducted among GSA FSS contracting officers, respondents estimated it took an average of 4.25 hours to complete a price reduction modification. GSA believes FSS contractors bear a similar burden for this task and is therefore using the same burden estimate.

Price Reduction Notifications

Total Annual Responses: 1,035.
Average Hours per Response: 4.25.
Total Time Burden (Hours): 4,399.
Total Cost Burden: $341,123.

Commercial Sales Practices Disclosures

The CSP burden results from disclosures required of any contractor submitting an offer for an FSS contract or modifying an FSS contract to increase prices, add items and Special Item Numbers, or exercise options.

The burden estimates for CSP disclosures are based upon the estimates provided by respondents to the GSA FSS contracting officer survey. The 77 survey respondents provided estimates regarding the amount of time it takes FSS contracting officers to complete CSP-related tasks and GSA believes these responses can be used as a benchmark for contractor burden estimates.

In calculating these burden estimates, GSA acknowledges a contractor's tasks are more complex than simply comparing offered prices to discounts given to other categories of customers. In addition to collecting and analyzing data, GSA expects offerors to provide data that is current, accurate and complete. GSA recognizes this due diligence places an additional burden on offerors. Also, similar to the PRC, factors such as sales volume, the number of contract items, complexity of offerings, and business structures has a significant effect on the burden but can

vary widely from contractor to contractor. Consequently, GSA is using the heavier lift and lighter lift methodology for the CSP burden estimates.

Pre-award Disclosures: In fiscal year 2018, contractors submitted 2,503 offers for FSS contracts with CSP disclosure requirements. GSA recognizes the complexity of this task varies with the type and number of offerings, business structure, and expected revenue, so for this burden estimate, these offers are separated between offerors with heavier lifts (20 percent or 501 offers) and those with lighter lifts (80 percent or 2,002 offers).

GSA previously based its burden estimates for this function directly on the results from the FAS survey of its FSS contracting officers in 2016. However, after receiving public comments in 2016 stating the pre-award disclosure burden for contractors exceeds that for contracting officers, GSA doubled its contractor estimates, resulting in increases for heavier lift contractors from 41.48 hours/year to 82.96 hours/year and for lighter lift contractors from 32.41 hours/year to 64.82 hours/year.

In 2019, GSA once again chose to increase its heavier lift burden estimates after considering public comments. GSA now believes the disparity between a lighter lift and a heavier lift is greater than previously estimated and projects the heavier lift burden for those activities to be 5 times greater than the lighter lift estimates.

Pre-award Disclosures—Heavier Lift

Total Annual Responses: 501.
Average Hours per Response: 324.10.
Total Time Burden (Hours): 162,374.
Total Cost Burden: $12,592,111.

Pre-award Disclosures—Lighter Lift

Total Annual Responses: 2,002.
Average Hours per Response: 64.82.
Total Time Burden (Hours): 129,770.
Total Cost Burden: $10,063,636.

Price Increase Modifications: In FY 2018, 1,457 price increase modifications were processed, including 492 (20 percent) with a heavier lift and 1,967 (80 percent) with a lighter lift. The time burden for these modifications varies mainly with the type and number of offerings. GSA is basing its burden estimates for this function directly on the results from the FAS survey of its FSS contracting officers.

Price Increases—Heavier Lift

Total Annual Responses: 492.
Average Hours per Response: 10.45.
Total Time Burden (Hours): 5,141.
Total Cost Burden: $398,716.

Price Increases—Lighter Lift

Total Annual Responses: 1,967.
Average Hours per Response: 9.71.
Total Time Burden (Hours): 18,037.
Total Cost Burden: $1,398,800.

Adding Items and Special Item Numbers (SINs): In FY 2018, 4,209 addition modifications were processed, including 1,275 (20 percent) with a heavier lift and 5,099 (80 percent) with a lighter lift. The time burden for these modifications varies with the type and number of offerings. GSA is basing its burden estimates for this function directly on the results from the FAS survey of its FSS contracting officers.

Addition Modifications—Heavier Lift

Total Annual Responses: 1,275.
Average Hours per Response: 11.13.
Total Time Burden (Hours): 14,191.
Total Cost Burden: $1,100,493.

Addition Modifications—Lighter Lift

Total Annual Responses: 5,099.
Average Hours per Response: 10.65.
Total Time Burden (Hours): 54,304.
Total Cost Burden: $4,275,363.

Exercising Options: In FY 2018, 2,468 option modifications were processed, including 494 (20 percent) with a heavier lift and 1,974 (80 percent) with a lighter lift. The time burden for these modifications varies with the type and number of offerings, business structure, and expected revenue.

GSA previously based its burden estimates for this function directly on the results from the FAS survey of its FSS contracting officers because while the associated tasks with processing an option CSP are similar to that of a pre-award CSP, the option CSP requires less time because of familiarity and precedents created during the preceding contract period.

However, GSA decided in 2019 to increase its heavier lift burden estimates after considering public comments. GSA now believes the disparity between a lighter lift and a heavier lift is greater than previously estimated and projects the heavier lift burden for those activities to be 5 times greater than the lighter lift estimates.

Option Modifications—Heavier Lift

Total Annual Responses: 494.
Average Hours per Response: 111.60.
Total Time Burden (Hours): 55,130.
Total Cost Burden: $1,000,605.

Option Modifications—Lighter Lift

Total Annual Responses: 1,974.
Average Hours per Response: 22.32.
Total Time Burden (Hours): 44,060.
Total Cost Burden: $3,416,828.

GSA Office of Inspector General Audits

The GSA Office of Inspector General (OIG) regularly audits GSA Schedule contracts for compliance with PRC and CSP requirements. The GSA OIG performed 48 contract audits in FY 2018.[12] Survey responses included with public comments submitted for the 2012 renewal of this information collection noted contractors estimated spending approximately 440–470 hours preparing for audits involving the PRC. This burden still applied in 2018, so GSA is taking the median point of that range (455) and multiplying it by 48 audits, to reach the sum of 21,840 hours expended preparing for audits.

GSA OIG Audits

Total Annual Responses: 48.
Average Hours per Response: 455.
Total Time Burden (Hours): 21,840.
Total Cost Burden: $1,226,316.

Total Annual Burden

The total estimated burden imposed by Federal Supply Schedule pricing disclosures is as follows:

Estimated Annual Time Burden (Hours)

Sales Reporting: 111,281.
Price Reductions Clause: 1,061,504.
CSP Disclosures: 483,008.
GSA OIG Audits: 21,840.
Total Annual Time Burden: 1,247,865.

Estimated Annual Cost Burden

Sales Reporting: $6,596,333.
Price Reductions Clause: $82,319,616.
CSP Disclosures: $37,457,248.
GSA OIG Audits: $1,693,692.
Total Annual Cost Burden: $128,066,888.

C. Public Comments

An initial notice of request for comments regarding the extension of this information collection was published in the **Federal Register** at 84 FR 24517 on May 28, 2019. GSA sought comments regarding (1) whether FSS pricing disclosures are necessary and have practical utility, and (2) if GSA's estimates of the collection burden are accurate, and based on valid assumptions and methodology. GSA received comment letters covering a variety of topics from two respondents, the GSA Office of Inspector General (GSA OIG) and the Coalition for Government Procurement (The Coalition).

[12] The GSA OIG's audit findings are outlined in their Semiannual Reports to the Congress. The report covering October 1, 2017 to March 31, 2018 stated the OIG performed 21 contract audits and the report covering April 1, 2018 to September 30, 2018 stated the GSA OIG performed 27 contract audits.

The GSA OIG's letter, dated July 26, 2019, provided comments for this information collection and the Transactional Data Reporting information collection (OMB control number 3090–0306). The Coalition's letter, dated July 29, 2019, is limited to this information collection, although they provided a separate letter with comments on the Transactional Data Reporting information collection. GSA is providing responses to the Transactional Data Reporting comments in the documents associated with the extension of OMB control number 3090–0306.

Both respondent's comments, as they relate to this information collection, concentrated on CSP and PRC disclosures. The following are summaries of those comments, grouped by subject matter, and GSA's responses:

Reporting Burden

Comments: Both respondents provided comments about GSA's burden calculations. The GSA OIG stated the burden is overstated, noting 16 of the 36 FSS contractors they audited in FY 2018 had insufficient commercial sales to disclose and therefore did not have to monitor PRC compliance. The GSA OIG explained these contractors had sales over $1 million and therefore would fall into the ''heavy lift'' category of GSA's burden methodology, despite having no compliance burden.

Conversely, the Coalition stated the burden estimates are too low and estimate the annual FSS pricing disclosures burden to be $1.1 billion. They stated:

- GSA's estimate of CSP-related activities being twice as burdensome for a contractor as the Government is true for a single contractor employee, but seven to ten contractor employees often participate in CSP preparation. Therefore, the CSP burden estimates should be increased by a factor of seven.
- The estimated contractor labor rate of $77.55/hour for PRC compliance activities does not account for the rates of professionals such as lawyers, accountants, and consultants, and contractors also frequently rely on outside resources for these activities. As such, the actual rates fall between $105/hour and $471/hour for an average of $288/hour.
- GSA's PRC compliance system burden estimate, which is adopted from an earlier Coalition study but allocated across 20 years, is an annual cost and should not be divided across 20 years.

Additionally, the GSA OIG stated the estimated 455-hour audit preparation burden should not be included in the burden estimates because those activities are included in the CSP and PRC disclosure activities for which GSA has already provided a burden estimate.

Finally, the Coalition noted three calculation discrepancies:

- The compliance systems (lighter lift) burden was noted as 35 hours but later included a burden of 30 hours per contractor.
- The stated labor rate was $77.25/hour but $77.55/hour was used in calculations.
- There is an arithmetical error in the pre-award disclosures (heavier lift) calculation.

GSA Response: The diverging opinions around the FSS pricing disclosure burden underscore GSA's decision to use a ''heavier lift'' and ''lighter lift'' methodology for many of the components of this information collection. While numerous contractors incur a significant burden for these activities, many others incur little to no burden, and these examples residing at either end of the burden spectrum should not be treated as indicative of all affected contractors.

GSA notes a contractor's sales volume is not the sole determiner of whether they are classified as heavier lift in the burden estimation methodology. As noted in the **Federal Register** notice, contracts with heavier lifts are those with the characteristics leading to increased burden—more sales volume, higher number of contract items, more complex offerings, more transactions, more complex transactions, and/or intricate business structures. In other words, no single factor, such as sales volume, results in a contractor having a heavier lift. Instead, GSA's intention was to show that 20 percent of contractors have a relatively heavier lift than the other 80 percent of contractors. As such, the 16 contractors highlighted by the GSA OIG would belong in the lighter lift category and provide an example of why a lighter lift contractor would have a relatively low burden.

Regarding the Coalition's burden estimates, GSA increased some of its heavier lift burden estimates in response to their comments. Previously, the heavier lift calculations for PRC compliance systems and CSP pre-award and options disclosures were generally 15–86 percent higher than the lighter lift estimates for those functions. However, GSA believes the disparity between a lighter lift and a heavier lift is greater than previously estimated and now estimates the heavier lift burden for those activities is 5 times greater than the lighter lift estimates. This change increases the annual information collection burden estimate by approximately $33 million.

Yet, GSA is not aligning the remaining burden estimates with the Coalition's because GSA does not believe those estimates are representative of most contractors. As illustrated in the first **Federal Register** notice, FSS contracts are held by a diverse set of companies, which vary in terms of business size, offerings, and FSS sales volume. For example, in FY 2018:

- 30.7 percent, or 4,975 contracts had $0 in reported FSS sales.
- 6.8 percent, or 1,100 contracts, accounted for about 80 percent of all FSS sales.
- The top 20 percent of FSS contracts (in terms of FY 2018 sales) accounted for 94.6 percent of FSS sales.
- Only 19.7 percent of FSS contracts had more than $1 million in FSS sales.
- 68.7 percent of FSS contracts were held by small businesses and had less than $1 million in FSS sales.
- Small businesses held 81 percent of the FSS contracts but accounted for 37 percent of FSS sales.

GSA also believes the labor rates provided by the Coalition are significantly higher than those typically paid by contractors to fulfill these functions. GSA believes these functions are typically performed by contract administrators with occasional assistance from higher-paid professionals, such as attorneys and consultants. The most comparable labor category to a contract administrator that was analyzed by the Bureau of Labor Statistics (BLS) is a compliance officer (13–1041). BLS's most recently published hourly rate for this type of professional was $34.86/hour; [13] when factoring a 36.25 percent overhead rate for fringe benefits, the fully burdened rate is $47.50 an hour.[14] However, GSA chose to use the higher $77.55/hour rate to account for the occasional involvement of higher-paid professionals.

With respect to the Coalition's assertion that their compliance estimate should be attributed to a single year, GSA will continue to allocate the burden over a 20-year period because contractors will not establish a new compliance system each year. GSA

[13] *See* the Bureau of Labor Statistics Occupational Employment and Wages for Compliance Officers, *available at https://www.bls.gov/oes/current/oes131041.htm.*

[14] 36.25% overhead rate was used in reference to Office of Management and Budget (OMB) Circular No. A–76. Circular A–76 requires agencies to use standard cost factors to estimate certain costs of Government performance. These cost factors ensure that specific government costs are calculated in a standard and consistent manner to reasonably reflect the cost of performing commercial activities with government personnel.

maintains many of the contractors with complex PRC monitoring requirements use automated compliance systems to relieve the ongoing compliance burden. These automated systems, which typically use price discount controls to assure PRC compliance, require high upfront effort but significantly decrease the ongoing burden for PRC compliance. On the other hand, contractors that forego automated systems in favor of manual, ad hoc monitoring activities will have higher ongoing monitoring burdens. GSA believes the high investment costs and low ongoing monitoring burden for contractors using automated systems is comparable over a 20-year period to the minimal investment effort and higher ongoing compliance burden for contractors using manual processes.

Regarding the GSA OIG audit burden, GSA will continue to capture this burden separately from other CSP and PRC-related burdens because that burden would not exist if those contractors were not subject to CSP and PRC disclosure requirements. As such, it should be accounted for when considering the burden absorbed by contractors complying with the CSP and PRC.

Finally, GSA corrected the errors identified by the Coalition; the compliance systems (lighter lift) burden is 35 hours, the correct labor rate is $77.55, and the arithmetical error in the pre-award disclosures (heavier lift) calculation was corrected. Additionally, the underlying calculations for the burden estimates included decimals that were not displayed in the **Federal Register** notice; as a result, some of the figures in the underlying calculations now use whole numbers to avoid rounding errors.

Utility of CSP and PRC Disclosures

Comments: Both respondents commented on the utility of CSP and PRC disclosures. The GSA OIG stated the benefits of these disclosures far exceed the estimated burdens but the Coalition posited these disclosures have no practical utility and are no longer necessary.

The GSA OIG stated the burdens of the CSP requirements and GSA OIG audits are considerably less than the estimated burdens, noting that since October 1, 2017 they had identified over $550 million in potential cost savings for upcoming contract periods based on commercial pricing information. Additionally, they stated they had identified over $15 million in unreported price reductions over the same time period despite auditing just 70 contracts.

Conversely, the Coalition recommends GSA eliminate the PRC and reform the CSP. They stated the PRC is a ''restraint of trade'' and it ''increases prices and operational costs while hindering innovation and competition in the commercial market.'' Moreover, they argue the PRC inhibits contractors' ability to compete in the private sector because it limits their ability to offer discounts to commercial customers without affecting their FSS pricing relationship. Regarding the CSP, the Coalition states it contains several undefined terms, raising GSA OIG audit and False Claims Act action risks if those terms are misunderstood. All told, the Coalition notes many contractors choose not to hold GSA Schedule contracts because of the CSP and PRC.

GSA Response: In respect to the GSA OIG's comment, GSA is solicited comments as part of its request to the Office of Information and Regulatory Affairs (OIRA). These comments supporting the value of CSP and PRC disclosures will be included in materials GSA is providing OIRA to justify the continuation of CSP and PRC disclosures.

Regarding the Coalition's comments, GSA understands contractors have regularly singled out these pricing tools as among the most complicated and burdensome requirements in federal contracting. As such, GSA will continue to investigate methods for reducing the information collection burden on its industry partners and increasing its reliance on internal Government systems for transactional data. Ultimately, GSA's reliance on contractor-reported data is a necessary bridge for ensuring the Government's continual access to the information it needs to make the best possible buying decisions for the taxpayer while it works towards developing internal capabilities.

Incomplete Analysis

Comments: Lastly, both respondents stated GSA's analysis was incomplete. The GSA OIG said GSA's burden estimates ''do not include the significant benefit those requirements bring to federal agencies and taxpayers alike.'' The Coalition argued GSA's analysis ''did not include an analysis of either the benefits of or the alternatives to these requirements . . .''

GSA Response: The **Federal Register** notice is only one facet of the process for requesting an extension of an existing information collection. Agencies requesting such extensions must also prepare a ''supporting statement'' that provides information including why the agency thinks the information collection is necessary, how the information is used, and consequences for the Government if the information is not collected or is collected less frequently.

Requesters may obtain a copy of the information collection documents from the General Services Administration, Regulatory Secretariat Division (MVCB), 1800 F Street NW, Washington, DC 20405, telephone 202–501–4755. Please cite OMB Control No. 3090–0235, Federal Supply Schedule Pricing Disclosures and Sales Reporting, in all correspondence. The supporting statement will also be posted on the Office of Information and Regulatory Affairs' website (*https://www.reginfo.gov*) if the information collection is approved.

Finally, additional public comments are particularly invited on: Whether this collection of information is necessary and whether it will have practical utility; whether our estimate of the public burden of this collection of information is accurate, and based on valid assumptions and methodology; ways to enhance the quality, utility, and clarity of the information to be collected.

Obtaining Copies of Proposals: Requesters may obtain a copy of the information collection documents from the General Services Administration, Regulatory Secretariat Division (MVCB), 1800 F Street NW, Washington, DC 20405, telephone 202–501–4755. Please cite OMB Control No. 3090–0235, Federal Supply Schedule Pricing Disclosures and Sales Reporting, in all correspondence.

Jeffrey A. Koses,

Senior Procurement Executive, Office of Acquisition Policy, Office of Government-wide Policy.

[FR Doc. 2019–21253 Filed 9–27–19; 8:45 am]

BILLING CODE 6820–61–P

DEPARTMENT OF HEALTH AND HUMAN SERVICES

Centers for Disease Control and Prevention

[30Day–19–0770]

Agency Forms Undergoing Paperwork Reduction Act Review

In accordance with the Paperwork Reduction Act of 1995, the Centers for Disease Control and Prevention (CDC) has submitted the information collection request titled National HIV Behavioral Surveillance System (NHBS) to the Office of Management and Budget (OMB) for review and approval. CDC

previously published a ''Proposed Data Collection Submitted for Public Comment and Recommendations'' notice on July 5, 2019 to obtain comments from the public and affected agencies. CDC did not receive comments related to the previous notice. This notice serves to allow an additional 30 days for public and affected agency comments.

CDC will accept all comments for this proposed information collection project. The Office of Management and Budget is particularly interested in comments that:

(a) Evaluate whether the proposed collection of information is necessary for the proper performance of the functions of the agency, including whether the information will have practical utility;

(b) Evaluate the accuracy of the agencies estimate of the burden of the proposed collection of information, including the validity of the methodology and assumptions used;

(c) Enhance the quality, utility, and clarity of the information to be collected;

(d) Minimize the burden of the collection of information on those who are to respond, including, through the use of appropriate automated, electronic, mechanical, or other technological collection techniques or other forms of information technology, *e.g.,* permitting electronic submission of responses; and

(e) Assess information collection costs.

To request additional information on the proposed project or to obtain a copy of the information collection plan and instruments, call (404) 639–7570 or send an email to *omb@cdc.gov.* Direct written comments and/or suggestions regarding the items contained in this notice to the Attention: CDC Desk Officer, Office of Management and Budget, 725 17th Street NW, Washington, DC 20503 or by fax to (202) 395–5806. Provide written comments within 30 days of notice publication.

Proposed Project

National HIV Behavioral Surveillance System (NHBS) (OMB Control No. 0920–0770, Exp. 05/31/2020)—Revision—National Center for HIV/AIDS, Viral Hepatitis, STD, and TB Prevention (NCHHSTP), Centers for Disease Control and Prevention (CDC).

Background and Brief Description

The purpose of this data collection is to monitor behaviors of persons at high risk for infection that are related to Human Immunodeficiency Virus (HIV) transmission and prevention in the United States. The primary objectives of the NHBS are to obtain data from samples of persons at risk to: (a) Describe the prevalence and trends in risk behaviors; (b) describe the prevalence of and trends in HIV testing and HIV infection; (c) describe the prevalence of and trends in use of HIV prevention services; (d) identify met and unmet needs for HIV prevention services in order to inform health departments, community based organizations, community planning groups and other stakeholders. By describing and monitoring the HIV risk behaviors, HIV seroprevalence and incidence, and HIV prevention experiences of persons at highest risk for HIV infection, NHBS provides an important data source for evaluating progress towards national public health goals, such as reducing new infections, increasing the use of condoms, and targeting high-risk groups.

The Centers for Disease Control and Prevention requests approval for a three-year extension of this information collection. Data are collected through anonymous, in-person interviews conducted with persons systematically selected from up to 25 Metropolitan Statistical Areas (MSAs) throughout the United States; these 25 MSAs are chosen based on having high HIV prevalence. Persons at risk for HIV infection to be interviewed for NHBS include men who have sex with men (MSM), persons who inject drugs (IDU), and heterosexually active persons at increased risk of HIV infection (HET). A brief screening interview will be used to determine eligibility for participation in the behavioral assessment.

The data from the behavioral assessment will provide estimates of (1) behavior related to the risk of HIV and other sexually transmitted diseases, (2) prior testing for HIV, and (3) use of HIV prevention services. All persons interviewed will also be offered an HIV test, and will participate in a pre-test counseling session. No other federal agency systematically collects this type of information from persons at risk for HIV infection. These data have substantial impact on prevention program development and monitoring at the local, state, and national levels.

CDC estimates that NHBS will involve, per year in up to 25 MSAs, eligibility screening for 100 persons and eligibility screening plus the behavioral assessment with 500 eligible respondents, resulting in a total of 37,500 eligible survey respondents and 7,500 ineligible screened persons during a three-year period. Data collection will rotate such that interviews will be conducted among one group per year: MSM in Year 1, IDU in Year 2, and HET in Year 3. The type of data collected for each group will vary slightly due to different sampling methods and risk characteristics of the group. Participation of respondents is voluntary and there is no cost to the respondents other than their time. The total annualized burden is 8,195 hours.

ESTIMATED ANNUALIZED BURDEN HOURS

Type of respondents	Form name	Number of respondents	Number of responses per respondent	Average burden per response (in hours)
Persons Screened	Eligibility Screener	15,000	1	5/60
Eligible Participants	Behavioral Assessment MSM	4,167	1	24/60
Eligible Participants	Behavioral Assessment IDU	4,167	1	43/60
Eligible Participant	Behavioral Assessment HET	4,167	1	31/60
Peer Recruiters	Recruiter Debriefing	4,167	1	2/60

Jeffrey M. Zirger,

Lead, Information Collection Review Office, Office of Scientific Integrity, Office of Science, Centers for Disease Control and Prevention.

[FR Doc. 2019–21168 Filed 9–27–19; 8:45 am]

BILLING CODE 4163–18–P

DEPARTMENT OF HEALTH AND HUMAN SERVICES

Centers for Disease Control and Prevention

Healthcare Infection Control Practices Advisory Committee (HICPAC)

AGENCY: Centers for Disease Control and Prevention (CDC), Department of Health and Human Services (HHS).

ACTION: Notice of meeting.

SUMMARY: In accordance with the Federal Advisory Committee Act, the CDC announces the following meeting for the Healthcare Infection Control Practices Advisory Committee (HICPAC). This meeting is open to the public, is limited only by room seating available (120). The public is also welcome to listen to the meeting via teleconference at 888–769–9417, passcode: 4538315; 100 teleconference lines are available. Time will be available for public comment. The public is welcome to submit written comments in advance of the meeting.

DATES: The meeting will be held on November 14, 2019, 9:00 a.m. to 5:00 p.m., EST, and November 15, 2019, 9:00 a.m. to 12:00 p.m., EST.

ADDRESSES: Centers for Disease Control and Prevention, Global Communications Center, Building 19, Auditorium B, 1600 Clifton Road NE, Atlanta, Georgia 30329 and teleconference at 888–769–9417, passcode: 4538315.

FOR FURTHER INFORMATION CONTACT: Koo-Whang Chung, M.P.H., HICPAC, Division of Healthcare Quality Promotion, NCEZID, CDC, l600 Clifton Road NE, Mailstop H16–3, Atlanta, Georgia 30329 Telephone (404) 498–0730. Email: *hicpac@cdc.gov.*

SUPPLEMENTARY INFORMATION:

Public Comment: Comments should be submitted in writing by email to the contact person listed below. The deadline for receipt of written public comment is October 31, 2019. All requests must contain the name, address, and organizational affiliation of the speaker, as well as the topic being addressed. Written comments should not exceed one single-spaced typed page in length and delivered in 3 minutes or less. Members of the public who wish to provide public comments should plan to attend the public comment session at the start time listed. Please note that the public comment period may end before the time indicated, following the last call for comments. Written comments received in advance of the meeting will be included in the official record of the meeting. Registration is required to attend in person or on the phone. Interested parties must be processed in accordance with established federal policies and procedures and may register at *https://www.cdc.gov/hicpac.*

Purpose: The Committee is charged with providing advice and guidance to the Director, Division of Healthcare Quality Promotion (DHQP), the Director, National Center for Emerging and Zoonotic Infectious Diseases (NCEZID), the Director, CDC, and the Secretary, Health and Human Services, regarding (1) the practice of healthcare infection prevention and control; (2) strategies for surveillance, prevention, and control of infections, antimicrobial resistance, and related events in settings where healthcare is provided; and (3) periodic updating of CDC guidelines and other policy statements regarding prevention of healthcare-associated infections and healthcare-related conditions.

Matters to be Considered: The agenda will include updates on CDC's activities for prevention of healthcare-associated infections. It will also include updates from the following HICPAC workgroups: The Healthcare Personnel Guideline Workgroup and the Neonatal Intensive Care Unit (NICU) Guideline Workgroup. The agenda also includes updates on CDC and DHQP activities. Agenda items are subject to change as priorities dictate.

The Director, Strategic Business Initiatives Unit, Office of the Chief Operating Officer, Centers for Disease Control and Prevention, has been delegated the authority to sign **Federal Register** notices pertaining to announcements of meetings and other committee management activities, for both the Centers for Disease Control and Prevention and the Agency for Toxic Substances and Disease Registry.

Kalwant Smagh,

Director, Strategic Business Initiatives Unit, Office of the Chief Operating Officer, Centers for Disease Control and Prevention.

[FR Doc. 2019–21138 Filed 9–27–19; 8:45 am]

BILLING CODE 4163–18–P

DEPARTMENT OF HEALTH AND HUMAN SERVICES

Centers for Disease Control and Prevention

[30Day–19–1171]

Agency Forms Undergoing Paperwork Reduction Act Review

In accordance with the Paperwork Reduction Act of 1995, the Centers for Disease Control and Prevention (CDC) has submitted the information collection request titled Study to Explore Early Development(SEED) Phase 3 to the Office of Management and Budget (OMB) for review and approval. CDC previously published a ''Proposed Data Collection Submitted for Public Comment and Recommendations'' notice on May 24, 2019 to obtain comments from the public and affected agencies. CDC did not receive comments related to the previous notice. This notice serves to allow an additional 30 days for public and affected agency comments.

CDC will accept all comments for this proposed information collection project. The Office of Management and Budget is particularly interested in comments that:

(a) Evaluate whether the proposed collection of information is necessary for the proper performance of the functions of the agency, including whether the information will have practical utility;

(b) Evaluate the accuracy of the agencies estimate of the burden of the proposed collection of information, including the validity of the methodology and assumptions used;

(c) Enhance the quality, utility, and clarity of the information to be collected;

(d) Minimize the burden of the collection of information on those who are to respond, including, through the use of appropriate automated, electronic, mechanical, or other technological collection techniques or other forms of information technology, *e.g.,* permitting electronic submission of responses; and

(e) Assess information collection costs.

To request additional information on the proposed project or to obtain a copy of the information collection plan and instruments, call (404) 639–7570 or send an email to *omb@cdc.gov.* Direct written comments and/or suggestions regarding the items contained in this notice to the Attention: CDC Desk Officer, Office of Management and Budget, 725 17th Street NW, Washington, DC 20503 or by fax to (202)

395–5806. Provide written comments within 30 days of notice publication.

Proposed Project

Study to Explore Early Development(SEED) Phase 3—Extension—National Center on Birth Defects and Developmental Disabilities (NCBDDD), Centers for Disease Control and Prevention (CDC).

Background and Brief Description

Autism spectrum disorders (ASD) are a group of neurodevelopmental disorders characterized by qualitative impairments in social interaction and communication and stereotyped behaviors and interests. Recent systematic population surveys and routine monitoring systems in the U.S. and other countries indicate the prevalence to be 1–2%. Apart from the identification of some rare genetic conditions that are commonly associated with autism, causal mechanisms for the disorder largely remain unknown.

The Children's Health Act of 2000 mandated CDC to establish autism surveillance and research programs to address the number, incidence, and causes of autism and related developmental disabilities. Under the provisions of this act, NCBDDD funded five Centers for Autism and Developmental Disabilities Research and Epidemiology (CADDRE) through program announcements in FY2001 and FY2002; CDC's NCBDDD served as the sixth CADDRE site.

For the first funding cycle (2001–2006), each CADDRE grantee had three core objectives: To develop a protocol for a multi-site collaborative epidemiologic study focused on autism (which was eventually named the Study to Explore Early Development [SEED]); to conduct surveillance of autism and other developmental disabilities; and to conduct site-specific investigator initiated studies on autism. In FY 2006, through a second CADDRE funding cycle, five grantees were awarded. The CADDRE activities for the second funding cycle (2006–2011) were limited to implementation of the first phase of SEED (subsequently known as SEED 1). CDC served as the sixth CADDRE SEED 1 site during this period. A second phase of SEED (SEED 2) was funded under a third funding cycle (2011–2016). Five CADDRE grantees received the awards. Again, CDC served as the sixth SEED 2 site.

A third phase of SEED (SEED 3) was funded in July 2016. Five extramural sites were funded. Together with the CDC, they are implementing the SEED 3 collaborative protocol. The SEED 3 protocol for identification of study participants, recruitment, and study data collection flow is similar to the protocols for SEED 1 and 2. CDC obtained approval to collect information for SEED 3 in 2017 (OMB 0920–1171). The current request is to obtain an extension of this approval so that data collection may continue beyond the current expiration date of 3/31/2020.

While all SEED phases have the same research goals and the same basic study design, data collection was greatly streamlined and revised between SEED 1, SEED 2, and SEED 3. Many study instruments and data collection components included in the SEED 1 protocol are not included in the SEED 3 protocol; two instruments included in the SEED 3 protocol were developed subsequent to SEED 1 to capture an abbreviated version of information that had been included on some of the discontinued SEED 1 forms and to capture some additional information overlooked in the SEED 1 protocol; and instruments included in all phases of SEED underwent review and minor revision subsequent to SEED 1 to address ambiguities and difficulties experienced during SEED 1 data collection. No additional changes are requested from the SEED 3 protocol that initially obtained OMB approval. Implementing this phase of SEED will increase the total SEED pooled sample size for investigation of high priority hypotheses. Maintaining the same basic study design and general protocol integrity will ensure that data pooling can be achieved across SEED phases.

Families will be identified from each of the three groups: Autism Spectrum Disorder (ASD), other developmental delay or disorder comparison group (DD), and a second comparison group of children randomly drawn from the entire study cohort population (POP). It is expected that the six SEED 3 study sites will enroll a total of 2,106 children and complete the study protocol. The data collection will take approximately 10 hours 35 minutes (ASD group); six hours 55 minutes (POP group); two hours 30 minutes (DD group) to complete, which includes (1) maternal telephone interview with questions about maternal reproductive history and pregnancy with the index child, (2) parent-completed questionnaires about parental and child health and child development, (3) in-person child developmental evaluation, (4) maternal and child anthropometry measurements, and (5) biosampling from biological parents and child. There are no costs to participants other than their time. The total estimated annual burden hours are 7,118.

ESTIMATED ANNUALIZED BURDEN HOURS

Type of respondents	Form name	Number of respondents	Number of responses per respondent	Average burden per response (in hours)
Mother, ASD workflow *All potential participants sent mailing.*	Invitation Packet/Response Card (Attachment 10a,d,g).	1,718	1	10/60
Mother, ASD workflow *Potentially eligible with contact by study staff.*	Invitation Call Script and (Attachment 11a) Social Communication Questionnaire (Attachment 3).	859	1	30/60
Mother, ASD workflow *Eligible, consented, and enrolled; assigned to the ASD workflow based on enrollment intake.*	Enrollment Packet (Attachment 12a, c, d)	469	1	20/60
Mother, ASD workflow *Completed this study step.*	Follow-up Phone Call Script and Checklist (Attachment 13) and Pregnancy Reference Form and 5 a, b).	422	1	15/60
Mother, ASD workflow *Completed this study step.*	Maternal Interview Call (Attachment 4)	422	1	1
Mother, ASD workflow *Completed this study step.*	Self-Administered Forms (Attachment 6a–e, 6f or 6g, 6h–i, 6k–l, and 6o–p).	375	1	105/60
Mother, ASD workflow *Completed this study step.*	Follow-up Call 2 (Attachment 14)	375	1	20/60

ESTIMATED ANNUALIZED BURDEN HOURS—Continued

Type of respondents	Form name	Number of respondents	Number of responses per respondent	Average burden per response (in hours)
Mother, ASD workflow *Completed this study step*.	Clinic/Home Visit—Developmental Assessment(Attachment 7b, c, g), saliva collection (Attachment 8a–d), overall consent (Attachment 15a).	328	1	225/60
Father, ASD workflow *Completed this study step*.	Clinic/Home Visit—Saliva Collection (Attachments 8b–d).	164	1	15/60
Child, ASD workflow *Completed this study step*.	Clinic/Home Visit—Developmental Assessment (attachment 7a, 7d or 7e or 7f) and saliva collection (8a–d).	328	1	135/60
Mother, POP workflow *All potential participants sent mailing*.	Invitation Packet/Response Card (Attachments 10c, 10f, and 10g).	1,466	1	10/60
Mother , POP workflow *Potentially eligible with contact by study staff*.	Invitation Call Script (Attachment 11c) and Social Communication Questionnaire (Attachment 3).	733	1	30/60
Mother , POP workflow *Eligible, consented, and enrolled; assigned to the POP workflow based on enrollment intake*.	Enrollment Packet (Attachments 12a, c, d) ...	334	1	20/60
Mother, POP workflow *Completed this study step*.	Follow-up Phone Call Script and Checklist (Attachment 13) and Pregnancy Reference Form Attachments 5a and 5b).	301	1	15/60
Mother, POP workflow *Completed this study step*.	Maternal Interview Call (Attachment 4)	301	1	1
Mother, POP workflow *Completed this study step*.	Self-Administered Forms (Attachment 6a–e, 6f or 6g, 6h–i, 6k, 6n–p).	267	1	105/60
Mother, POP workflow *Completed this study step*.	Follow-up Call 2 (Attachment 14)	267	1	20/60
Mother, POP workflow *Completed this study step*.	Developmental Assessment saliva collection (Attachment 8a–d), overall consent (Attachment 15c).	234	1	50/60
Father, POP workflow *Completed this study step*.	Clinic/Home Visit—Saliva Collection (Attachments 8b–d).	117	1	15/60
Child, POP workflow *Completed this study step*.	Clinic/Home Visit—Developmental Assessment Attachment 7a–c), saliva collection (Attachment 8a–d).	234	1	90/60
Mother, DD workflow *All potential participants sent mailing*.	Invitation Packet/Response Card (Attachments 10b, 10e, and 10g).	641	1	10/60
Mother, DD workflow *Potentially eligible with contact by study staff*.	Invitation Call Script (Attachment 11b) and SCQ (Attachment 3).	321	1	30/60
Mother, DD workflow *Eligible, consented, and enrolled; assigned to the DD workflow based on enrollment intake*.	Enrollment Packet (Attachment 12b–d)	175	1	20/60
Mother, DD workflow *Completed this study step*.	Follow-up Phone Call Script (Attachment 13) and Checklist and Pregnancy Reference Form (Attachments 5a and 5b).	158	1	15/60
Mother, DD workflow *Completed this study step*.	Maternal Interview Call (Attachment 4)	158	1	1
Mother, DD workflow *Completed this study step*.	Self-Administered Forms (Attachments 6a–d, 6j, 6m, and 6o–p).	140	1	55/60
Mother, DD workflow *Completed this study step*.	Follow-up Call 2 (Attachment 15b)	140	1	20/60

Jeffrey M. Zirger,

Lead, Information Collection Review Office, Office of Scientific Integrity, Office of Science, Centers for Disease Control and Prevention.

[FR Doc. 2019–21169 Filed 9–27–19; 8:45 am]

BILLING CODE 4163–18–P

DEPARTMENT OF HEALTH AND HUMAN SERVICES

Centers for Medicare & Medicaid Services

[Document Identifier: CMS–10709]

Agency Information Collection Activities: Proposed Collection; Comment Request

AGENCY: Centers for Medicare & Medicaid Services, HHS.

ACTION: Notice.

SUMMARY: The Centers for Medicare & Medicaid Services (CMS) is announcing an opportunity for the public to comment on CMS' intention to collect information from the public. Under the Paperwork Reduction Act of 1995 (the PRA), federal agencies are required to publish notice in the **Federal Register** concerning each proposed collection of information (including each proposed extension or reinstatement of an existing collection of information) and to allow 60 days for public comment on the proposed action. Interested persons are

invited to send comments regarding our burden estimates or any other aspect of this collection of information, including the necessity and utility of the proposed information collection for the proper performance of the agency's functions, the accuracy of the estimated burden, ways to enhance the quality, utility, and clarity of the information to be collected, and the use of automated collection techniques or other forms of information technology to minimize the information collection burden.

DATES: Comments must be received by November 29, 2019.

ADDRESSES: When commenting, please reference the document identifier or OMB control number. To be assured consideration, comments and recommendations must be submitted in any one of the following ways:

1. *Electronically.* You may send your comments electronically to *http://www.regulations.gov.* Follow the instructions for ''Comment or Submission'' or ''More Search Options'' to find the information collection document(s) that are accepting comments.

2. *By regular mail.* You may mail written comments to the following address: CMS, Office of Strategic Operations and Regulatory Affairs, Division of Regulations Development, Attention: Document Identifier/OMB Control Number __, Room C4–26–05, 7500 Security Boulevard, Baltimore, Maryland 21244–1850.

To obtain copies of a supporting statement and any related forms for the proposed collection(s) summarized in this notice, you may make your request using one of following:

1. Access CMS' website address at website address at *https://www.cms.gov/Regulations-and-Guidance/Legislation/PaperworkReductionActof1995/PRA-Listing.html.*

2. Email your request, including your address, phone number, OMB number, and CMS document identifier, to *Paperwork@cms.hhs.gov.*

3. Call the Reports Clearance Office at (410) 786–1326.

FOR FURTHER INFORMATION CONTACT: William N. Parham at (410) 786–4669.

SUPPLEMENTARY INFORMATION:

Contents

This notice sets out a summary of the use and burden associated with the following information collections. More detailed information can be found in each collection's supporting statement and associated materials (see **ADDRESSES**).

CMS–10709 Hospital Survey for Specified Covered Outpatient Drugs (SCODs)

Under the PRA (44 U.S.C. 3501–3520), federal agencies must obtain approval from the Office of Management and Budget (OMB) for each collection of information they conduct or sponsor. The term ''collection of information'' is defined in 44 U.S.C. 3502(3) and 5 CFR 1320.3(c) and includes agency requests or requirements that members of the public submit reports, keep records, or provide information to a third party. Section 3506(c)(2)(A) of the PRA requires federal agencies to publish a 60-day notice in the **Federal Register** concerning each proposed collection of information, including each proposed extension or reinstatement of an existing collection of information, before submitting the collection to OMB for approval. To comply with this requirement, CMS is publishing this notice.

Information Collection

1. *Type of Information Collection Request:* New collection (Request for a new OMB control number); *Title of Information Collection:* Hospital Survey for Specified Covered Outpatient Drugs (SCODs); *Use:* In the CY 2018 OPPS/ASC payment system final rule with comment period, CMS finalized a policy to adjust payment for separately payable outpatient drugs acquired by eligible hospitals at discounted rates under HRSA's 340B program from Average Sales Price (ASP) plus 6 percent to ASP minus 22.5 percent. According to 42 U.S.C. 256b, eligible hospitals include those with a Medicare Disproportionate Share Hospital adjustment of greater than 11.75 percent, Children's Hospitals, Critical Access Hospitals, Cancer Hospitals, Rural Referral Centers and Sole Community Hospitals. The 340B program sets a ceiling on the price that covered entities pay for outpatient drugs. The 340B ceiling price refers to the maximum amount that a manufacturer can charge a covered entity for the purchase of a 340B covered outpatient drug. The 340B ceiling price is statutorily defined as the Average Manufacturer Price (AMP) reduced by the rebate percentage, which is commonly referred to as the Unit Rebate Amount (URA).

On December 27, 2018, the United States District Court for the District of Columbia ruled that the Secretary of the Department of Health & Human Services exceeded his statutory authority to adjust payment rates under the Hospital Outpatient Prospective Payment System (OPPS) for separately payable, 340B-acquired drugs. *See American Hospital Ass'n* v. *Azar,* 348 F. Supp. 3d 62, 82–83 (D.D.C. 2018), *appeal pending,* Nos. 19–5048 & 19–5198 (D.C. Cir.). The Court reasoned, in part, that the Secretary had not collected the necessary data to set payment rates based on acquisition costs. The government disagrees with that ruling and has appealed. Nonetheless, in the event that the ruling is affirmed, CMS believes that it is important to begin obtaining acquisition costs for specified covered outpatient drugs to set payment rates based on cost for 340B-acquired drugs when they are furnished by certain covered entity hospitals.

The acquisition cost data hospitals submit in response to this survey will be used to help determine payment amounts for drugs acquired under the 340B program. We want to ensure that the Medicare program pays for specified covered outpatient drugs purchased under the 340B program at amounts that approximate what hospitals actually pay to acquire the drugs. This will ensure that the Medicare program uses taxpayer dollars prudently while maintaining beneficiary access to these drugs and allowing beneficiary cost-sharing to be based on the amounts hospitals actually pay to acquire the drugs. *Form Number:* CMS–10709 (OMB control number: 0938–New); *Frequency:* Occasionally; *Affected Public:* Business or other for-profits and Not-for-profits, State, Local, or Tribal Governments; *Number of Respondents:* 761; *Total Annual Responses:* 46,610,448; *Total Annual Hours:* 33,484. (For policy questions regarding this collection contact Steven Johnson at 410–786–3332.)

Dated: September 25, 2019.

William N. Parham, III,

Director, Paperwork Reduction Staff, Office of Strategic Operations and Regulatory Affairs.

[FR Doc. 2019–21120 Filed 9–26–19; 4:15 pm]

BILLING CODE 4120–01–P

DEPARTMENT OF HEALTH AND HUMAN SERVICES

Centers for Medicare & Medicaid Services

[CMS–3383–N]

Medicare, Medicaid, and CLIA Programs; Clinical Laboratory Improvement Amendments of 1988 Exemption of Laboratories Licensed by the State of Washington

AGENCY: Centers for Medicare & Medicaid Services (CMS), HHS.

ACTION: Notice.

SUMMARY: This notice announces that laboratories located in and licensed by the State of Washington that possess a valid license under the Medical Test Site law, Chapter 70.42 of the Revised Code of Washington, are exempt from the requirements of the Clinical Laboratory Improvement Amendments of 1988 (CLIA) for a period of 4 years.

DATES: The exemption takes effect on September 30, 2019 to October 2, 2023.

FOR FURTHER INFORMATION CONTACT: Daniel Cajigas, (410) 786–0783.

SUPPLEMENTARY INFORMATION:

I. Background and Legislative Authority

Section 353 of the Public Health Service Act (PHSA), as amended by the Clinical Laboratory Improvement Amendments of 1988 (CLIA) (Pub. L. 100–578), which was enacted on October 31, 1988, generally provides that no laboratory may perform tests on human specimens for the diagnosis, prevention or treatment of any disease or impairment of, or assessment of the health of, human beings unless it has a certificate to perform that category of tests issued by the Secretary of the Department of Health and Human Services (HHS). Under section 1861(s)(17)(A) of the Social Security Act (the Act), the Medicare program will only pay for laboratory services if the laboratory has an appropriate CLIA certificate for the testing they conduct. Under section 1902(a)(9)(C) of the Act, state Medicaid plans will generally only pay for laboratory services furnished by CLIA-certified laboratories. Thus, although subject to specified exemptions and exceptions, laboratories generally must have a current and valid CLIA certificate to test human specimens for the purposes noted above to be eligible for payment for those tests by the Medicare or Medicaid programs. Regulations implementing section 353 of the PHSA are contained in 42 CFR part 493.

Section 353(p) of the PHSA provides for the exemption of laboratories from CLIA requirements in states that enact legal requirements that are equal to or more stringent than CLIA's statutory and regulatory requirements. Section 353(p) of the PHSA is implemented in subpart E of our regulations at 42 CFR part 493. Sections 493.551(b) and 493.553 provide that we may exempt from CLIA requirements, for a period not to exceed 6 years, all state-licensed or state-approved laboratories in a state if the state licensure program meets the specified conditions. Section 493.559 provides that we will publish a notice in the **Federal Register** when we grant an exemption to an approved state licensure program. It also provides that the notice will include the following:

- The basis for granting the exemption.
- A description of how the laboratory requirements are equal to or more stringent than those of CLIA.
- The term of approval, not to exceed 6 years.

A. State of Washington's Application for CLIA Exemption of Its Laboratories

The State of Washington has applied for exemption of its laboratories from CLIA program requirements. The State of Washington submitted all of the applicable information and attestations required by §§ 493.551(a), 493.553, and 493.557(b) for state licensure programs seeking exemption of their licensed laboratories from CLIA program requirements. Examples of documents and information submitted include: A comparison of its laboratory licensure requirements with comparable CLIA condition-level requirements (that is, a crosswalk); and a description of the following: Its inspection process; its proficiency testing (PT) monitoring process; its data management and analysis system; its investigative and response procedures for complaints received against laboratories; and its policy regarding announced and unannounced inspections.

B. CMS Analysis of Washington's Application and Supporting Documentation

To determine whether we should grant a CLIA exemption to laboratories licensed by a state, we review the application and additional documentation that the state submits to us and conduct a detailed and in-depth comparison of the state licensure program and CLIA's statutory and regulatory requirements to determine whether the state program meets the requirements at subpart E of part 493.

In summary, the state generally must demonstrate that:

- It has state laws in effect that provide for a state licensure program that has requirements that are equal to or more stringent than CLIA condition-level requirements for laboratories.
- It has implemented a state licensure program with requirements that are equal to or more stringent than the CLIA condition-level requirements such that a laboratory licensed by the state program would meet the CLIA condition-level requirements if it were inspected against those requirements.
- The requirements under that state licensure program meet or exceed the requirements of §§ 493.553, 493.555, and 493.557(b) and are suitable for approval by us under § 493.551(a). For example, among other things, the program would need to:

++ Demonstrate that it has enforcement authority and administrative structures and resources adequate to enforce its laboratory requirements.

++ Permit us or our agents to inspect laboratories within the state.

++ Require laboratories within the state to submit to inspections by us or our agents as a condition of licensure.

++ Agree to pay any costs associated with our activities to validate its state licensure program as well as the state's pro rata share of the general overhead to develop and implement CLIA as specified in §§ 493.645(a), 493.646(b), and 493.557(b).

++ Take appropriate enforcement action against laboratories found by us or our agents out of compliance with requirements comparable to CLIA condition-level requirements, as specified in § 493.557(b).

As specified in our regulations at § 493.555 and § 493.557(b), our review of a state licensure program includes (but is not necessarily limited to) an evaluation of the following:

- Whether the state's requirements for laboratories are equal to or more stringent than the CLIA condition-level requirements.
- The state's inspection process requirements to determine the following:

++ The comparability of the full inspection and complaint inspection procedures to those of CMS.

++ The state's enforcement procedures for laboratories found to be out of compliance with its requirements.

- The ability of the state to provide us with electronic data and reports with the adverse or corrective actions resulting from PT results that constitute unsuccessful participation in CMS-approved PT programs and with other data we determine to be necessary for validation review and assessment of the state's inspection process requirements.
- The state's agreement with us to ensure that the agreement obligates the state to do the following:

++ Notify us within 30 days of the action taken against any CLIA-exempt laboratory that has had its licensure or approval withdrawn or revoked or been in any way sanctioned.

++ Notify us within 10 days of any deficiency identified in a CLIA-exempt laboratory in cases when the deficiency poses an immediate jeopardy to the laboratory's patients or a hazard to the general public.

++ Notify each laboratory licensed by the state under its approved state licensure program within 10 days of a withdrawal of our approval of the state's licensure program, and the resulting loss of the laboratory's exemption from CLIA based on its licensure under that program.

++ Provide us with written notification of any changes in the state's licensure (or approval) and inspection requirements.

++ Disclose to us or our agent any laboratory's PT results in accordance with the state's confidentiality requirements.

++ Take appropriate enforcement action against laboratories that we or our agents find to be out of compliance with CLIA condition-level requirements in a validation survey, and report these enforcement actions to us.

++ Notify us of all newly licensed laboratories, and any changes in the specialties and subspecialties for which any laboratory performs testing, within 30 days.

++ Provide us, as requested, inspection schedules for validation purposes.

In keeping with the process described above, we evaluated the application and supporting materials that were submitted by Washington State to verify that the laboratories licensed through its program will meet or exceed the requirements of the following subparts of part 493: Subpart H, Participation in Proficiency Testing for Laboratories Performing Nonwaived Testing; Subpart J, Facility Administration for Nonwaived Testing; Subpart K, Quality Systems for Nonwaived Testing, Subpart M, Personnel for Nonwaived Testing; Subpart Q, Inspection; and Subpart R, Enforcement Procedures.

We found that Washington State's laboratory licensure program requirements are equivalent to all the CLIA condition-level requirements. The state licensure program's inspection process and PT monitoring processes were adequate. Other materials that were submitted demonstrated compliance with the other above-referenced requirements of subpart E of part 493. As a result, we concluded that the submitted documents supported exempting laboratories licensed under that program from the CLIA program requirements.

The federal validation inspections of CLIA-exempt laboratories, as specified in § 493.563, were conducted on a representative sample basis, as well as in response to any substantial allegations of noncompliance (complaint inspections). The outcome of those validation inspections has been, and will continue to be our principal tool for verifying that the laboratories located in, and licensed by the state are in compliance with CLIA requirements.

We have conducted validation inspections of a representative sample (approximately 5 percent) of the laboratories inspected by the Washington State Office of Laboratory Quality Assurance (LQA). The validation inspections were primarily of the concurrent type; that is, our surveyors accompanied Washington State's inspectors, each inspecting against his or her agency's respective regulations. Analysis of the validation data revealed no significant differences between the state and federal findings. The validation surveys verified that the State of Washington inspection process covers all CLIA conditions applicable to each laboratory being inspected and also verified that the state laboratory licensure requirements meet or exceed CLIA condition-level requirements. Our validation surveys found the state inspectors highly skilled and qualified. The LQA inspected laboratories in a timely fashion; that is, all laboratories were inspected within the required 24-month cycle. All parameters monitored by our regional office in Seattle, Washington, to date, indicate that the State of Washington is meeting all requirements for approval of CLIA exemption. This federal monitoring will continue as an on-going process.

C. Conclusion

Based on review of the documents submitted by the Washington state licensure program under the requirements of subpart E of part 493, as well as the outcome of the validation inspections conducted by our regional office in Seattle, Washington, we find that the State of Washington's licensure program meets the requirements of § 493.551(a), and that, as a result, we may exempt from CLIA program requirements all state-licensed laboratories.

Approval of the CLIA exemption for laboratories located within and licensed by the State of Washington laboratory licensure program is subject to removal if we determine that the outcome of a comparability review or a validation review inspection is not acceptable, as described under §§ 493.573 and 493.575, or if the State of Washington fails to pay the required fee every 2 years as required under § 493.646(b).

D. Laboratory Data

In accordance with our regulations at § 493.557(b)(8), the approval of this exemption for laboratories located within and licensed by the State of Washington is conditioned on the State of Washington's continued compliance with the assertions made in its application, especially the provision of information to us about changes to a laboratory's specialties or subspecialties based on the state's survey, and changes to a laboratory's certification status.

E. Required Administrative Actions

CLIA is a user-fee funded program. The registration fee paid by laboratories is intended to cover the cost of the development and administration of the program. However, when a state's application for exemption is approved, we do not charge a fee to laboratories in the state. The state's share of the costs associated with CLIA must be collected from the state, as specified in § 493.645(a).

The State of Washington must pay for the following:

- Costs of federal inspections of laboratories in the state to verify that Washington State's laboratory licensure program requirements are equivalent to or more stringent than those in the CLIA program, and that they are enforced in an appropriate manner. The average federal hourly rate is multiplied by the total hours required to perform federal validation surveys within the state.
- Costs incurred for federal surveys, including investigations of complaints that are substantiated. We will bill the State of Washington on a semiannual basis.
- The State of Washington's proportionate share of the costs associated with establishing, maintaining, and improving the CLIA computer system, based on the portion of those services from which the State of Washington received direct benefit or which contributed to the CLIA program in the state. Thus, the State of Washington is being charged for a portion of our direct and indirect costs of administering the CLIA program. Such costs will be incurred by CMS, the Centers for Disease Control and Prevention (CDC), the Food and Drug Administration (FDA) and contractors working on behalf of these respective agencies.

To estimate the State of Washington's proportionate share of the general overhead costs to develop and implement CLIA, we determined the ratio of laboratories in the state to the total number of laboratories nationally. Approximately 1.6 percent of the registered laboratories are in the State of Washington. We determined that a corresponding percentage of the applicable CMS, CDC, FDA, and their respective contractor costs should be borne by the State of Washington.

The State of Washington has agreed to pay the state's pro rata share of the anticipated overhead costs and costs of actual validation (including complaint investigation surveys). A final reconciliation for all laboratories and all expenses will be made. We will reimburse the state for any overpayment or bill it for any balance.

II. Approval

In light of the foregoing, we grant approval of the State of Washington's laboratory licensure program under subpart E. All laboratories located in and licensed by the State of Washington under the Medical Test Site law, Chapter 70.42 of the Revised Code of Washington, are CLIA-exempt for all specialties and subspecialties until October 2, 2023.

III. Collection of Information Requirements

This document does not impose information collection requirements, that is, reporting, recordkeeping or third-party disclosure requirements. Consequently, there is no need for review by the Office of Management and Budget under the authority of the Paperwork Reduction Act of 1995 (44 U.S.C. 3501 *et seq.*).

Dated: September 12, 2019.

Seema Verma,

Administrator, Centers for Medicare & Medicaid Services.

[FR Doc. 2019–21062 Filed 9–27–19; 8:45 am]

BILLING CODE 4120–01–P

DEPARTMENT OF HEALTH AND HUMAN SERVICES

Centers for Medicare & Medicaid Services

Performance Review Board Membership

AGENCY: Centers for Medicare & Medicaid Services, HHS.

ACTION: Notice of Performance Review Board Membership.

FOR FURTHER INFORMATION CONTACT: Kathy Vaughn, 410–786–1050 or *katherine.vaughn@cms.hhs.gov*.

5 U.S.C. 4314(c)(1) through (5) requires each agency to establish, in accordance with regulations prescribed by the Office of Personnel Management, one or more Senior Executive Service (SES) Performance Review Boards.

The PRB shall review and evaluate the initial summary rating of a senior executive's performance, the executive's response, and the higher-level official's comments on the initial summary rating. In addition, the PRB will review and recommend executive performance bonuses and pay increases.

5 U.S.C. 4314(c)(4) requires the appointment of board members to be published in the **Federal Register**. The following persons comprise a standing roster to serve as members of the SES PRB for the Centers for Medicare & Medicaid Services:

Jennifer Main, Chief Operating Officer (serves as the Chair)
Kimberly Brandt, Principal Deputy Administrator for Policy and Operations
Scott Giberson, Acting Director, Office of Human Capital
Nancy O'Connor, Acting Consortium Administrator, Consortium for Medicare Health Plans Operations
Randy Pate, Deputy Administrator and Director, Center for Consumer Information and Insurance Oversight
Elizabeth Richter, Deputy Center Director, Center for Medicare
Arrah Tabe-Bedward, Deputy Director, Center for Medicare and Medicaid Innovation
Jeffrey, Deputy Director for Operations, Center for Consumer Information and Insurance Oversight

Dated: September 5, 2019.

Jennifer Main,

Chief Operating Officer.

[FR Doc. 2019–21061 Filed 9–27–19; 8:45 am]

BILLING CODE 4120–01–P

DEPARTMENT OF HEALTH AND HUMAN SERVICES

Food and Drug Administration

[Docket No. FDA–2019–D–3361]

Eligibility Criteria for Expanded Conditional Approval of New Animal Drugs; Draft Guidance for Industry; Availability

AGENCY: Food and Drug Administration, HHS.

ACTION: Notice of availability.

SUMMARY: The Food and Drug Administration (FDA or Agency) is announcing the availability of a draft guidance for industry (GFI) #261 entitled ''Eligibility Criteria for Expanded Conditional Approval of New Animal Drugs.'' This draft guidance is intended for persons interested in pursuing conditional approval of new animal drugs for certain major uses in major species. Eligibility for conditional approval has been expanded beyond minor uses in major species and minor species to include certain major uses. The Center for Veterinary Medicine (CVM) refers to the process for conditionally approving new animal drugs that are not minor use and minor species (MUMS) drugs as ''expanded conditional approval.'' The purpose of expanded conditional approval is to incentivize development of new animal drugs for serious or life-threatening conditions or unmet animal or human health needs under circumstances where a demonstration of effectiveness would require a complex or particularly difficult study or studies. This draft guidance defines certain terms, clarifies the eligibility criteria for expanded conditional approval, and describes the criteria CVM intends to consider when determining expanded conditional approval eligibility.

DATES: Submit either electronic or written comments on the draft guidance by January 28, 2020 to ensure that the Agency considers your comment on this draft guidance before it begins work on the final version of the guidance.

ADDRESSES: You may submit comments on any guidance at any time as follows:

Electronic Submissions

Submit electronic comments in the following way:

- *Federal eRulemaking Portal: https://www.regulations.gov.* Follow the instructions for submitting comments. Comments submitted electronically, including attachments, to *https://www.regulations.gov* will be posted to the docket unchanged. Because your comment will be made public, you are solely responsible for ensuring that your comment does not include any confidential information that you or a third party may not wish to be posted, such as medical information, your or anyone else's Social Security number, or confidential business information, such as a manufacturing process. Please note that if you include your name, contact information, or other information that identifies you in the body of your comments, that information will be posted on *https://www.regulations.gov.*
- If you want to submit a comment with confidential information that you do not wish to be made available to the public, submit the comment as a written/paper submission and in the manner detailed (see ''Written/Paper Submissions'' and ''Instructions'').

Written/Paper Submissions

Submit written/paper submissions as follows:

- *Mail/Hand Delivery/Courier (for written/paper submissions):* Dockets Management Staff (HFA–305), Food and Drug Administration, 5630 Fishers Lane, Rm. 1061, Rockville, MD 20852.

• For written/paper comments submitted to the Dockets Management Staff, FDA will post your comment, as well as any attachments, except for information submitted, marked and identified, as confidential, if submitted as detailed in ''Instructions.''

Instructions: All submissions received must include the Docket No. FDA–2019–D–3361 for ''Eligibility Criteria for Expanded Conditional Approval of New Animal Drugs.'' Received comments will be placed in the docket and, except for those submitted as ''Confidential Submissions,'' publicly viewable at *https://www.regulations.gov* or at the Dockets Management Staff between 9 a.m. and 4 p.m., Monday through Friday.

• Confidential Submissions—To submit a comment with confidential information that you do not wish to be made publicly available, submit your comments only as a written/paper submission. You should submit two copies total. One copy will include the information you claim to be confidential with a heading or cover note that states ''THIS DOCUMENT CONTAINS CONFIDENTIAL INFORMATION.'' The Agency will review this copy, including the claimed confidential information, in its consideration of comments. The second copy, which will have the claimed confidential information redacted/blacked out, will be available for public viewing and posted on *https://www.regulations.gov.* Submit both copies to the Dockets Management Staff. If you do not wish your name and contact information to be made publicly available, you can provide this information on the cover sheet and not in the body of your comments and you must identify this information as ''confidential.'' Any information marked as ''confidential'' will not be disclosed except in accordance with 21 CFR 10.20 and other applicable disclosure law. For more information about FDA's posting of comments to public dockets, see 80 FR 56469, September 18, 2015, or access the information at: *https://www.gpo.gov/fdsys/pkg/FR-2015-09-18/pdf/2015-23389.pdf.*

Docket: For access to the docket to read background documents or the electronic and written/paper comments received, go to *https://www.regulations.gov* and insert the docket number, found in brackets in the heading of this document, into the ''Search'' box and follow the prompts and/or go to the Dockets Management Staff, 5630 Fishers Lane, Rm. 1061, Rockville, MD 20852.

You may submit comments on any guidance at any time (see 21 CFR 10.115(g)(5)).

Submit written requests for single copies of the guidance to the Policy and Regulations Staff (HFV–6), Center for Veterinary Medicine, Food and Drug Administration, 7519 Standish Pl., Rockville, MD 20855. Send one self-addressed adhesive label to assist that office in processing your requests. See the **SUPPLEMENTARY INFORMATION** section for electronic access to the draft guidance document.

FOR FURTHER INFORMATION CONTACT: Christopher Loss, Center for Veterinary Medicine (HFV–116), Food and Drug Administration, 7500 Standish Pl., Rockville, MD 20855, 240–402–0619, *christopher.loss@fda.hhs.gov.*

SUPPLEMENTARY INFORMATION:

I. Background

FDA is announcing the availability of draft GFI #261 entitled ''Eligibility Criteria for Expanded Conditional Approval of New Animal Drugs.'' In 2013, in conjunction with the reauthorization of FDA's animal drug user fee program, FDA agreed to consider whether it would be appropriate to expand the concept of conditional approval in section 571 of the Federal Food, Drug, and Cosmetic Act (FD&C Act) (21 U.S.C. 360ccc) to include new animal drug use in major species for diseases or conditions that would not be eligible for conditional approval under the MUMS provisions of the FD&C Act. Through a public process and working in concert with stakeholders, CVM explored the feasibility of expanding the eligibility for conditional approval. CVM concluded that conditional approval may be appropriate for new animal drugs intended for a serious or life-threatening disease or condition, or for drugs intended to address an unmet animal or human health need under circumstances where a demonstration of effectiveness would require a particularly difficult effectiveness study or studies. The Animal Drug User Fee Amendments of 2018 amended section 571 of the FD&C Act to include provisions for expanded conditional approval and directed FDA to establish guidance or regulations to clarify the eligibility criteria for expanded conditional approval.

In accordance with the recent amendments to the FD&C Act, this draft guidance proposes definitions for the following terms that appear in section 571 of the FD&C Act:

• ''serious or life-threatening disease or condition''

• ''unmet animal or human health need,'' and

• ''complex or particularly difficult study or studies.''

II. Significance of Guidance

This level 1 draft guidance is being issued consistent with FDA's good guidance practices regulation (21 CFR 10.115). The draft guidance, when finalized, will represent the current thinking of FDA on ''Eligibility Criteria for Expanded Conditional Approval of New Animal Drugs.'' It does not establish any rights for any person and is not binding on FDA or the public. You can use an alternative approach if it satisfies the requirements of the applicable statutes and regulations. This guidance is not subject to Executive Order 12866.

III. Paperwork Reduction Act of 1995

This draft guidance refers to previously approved collections of information found in FDA regulations for new animal drug applications submitted under sections 512(b) (21 U.S.C. 360b(b)) and 571 of the FD&C Act. These collections of information are subject to review by the Office of Management and Budget (OMB) under the Paperwork Reduction Act of 1995 (44 U.S.C. 3501–3520). The collections of information in 21 CFR 514.1, 514.4, 514.5, 514.6, 514.8, and 514.11 have been approved under OMB control number 0910–0032.

IV. Electronic Access

Persons with access to the internet may obtain the draft guidance at either *https://www.fda.gov/AnimalVeterinary/GuidanceComplianceEnforcement/GuidanceforIndustry/default.htm* or *https://www.regulations.gov.*

Dated: September 23, 2019.

Lowell J. Schiller,

Principal Associate Commissioner for Policy.

[FR Doc. 2019–21002 Filed 9–26–19; 11:15 am]

BILLING CODE 4164–01–P

DEPARTMENT OF HEALTH AND HUMAN SERVICES

Food and Drug Administration

[Docket No. FDA–2019–D–3764]

Demonstrating Bioequivalence for Soluble Powder Oral Dosage Form Products and Type A Medicated Articles Manufactured From Active Pharmaceutical Ingredients Considered To Be Soluble in Aqueous Media; Draft Guidance for Industry; Availability

AGENCY: Food and Drug Administration, HHS.

ACTION: Notice of availability.

SUMMARY: The Food and Drug Administration (FDA, we, or Agency) is

announcing the availability of a draft guidance for industry (GFI) #171 entitled ''Demonstrating Bioequivalence for Soluble Powder Oral Dosage Form Products and Type A Medicated Articles Manufactured from Active Pharmaceutical Ingredients Considered to be Soluble in Aqueous Media.'' This draft guidance describes how the Agency intends to evaluate requests for waiving the requirement for performing in vivo bioequivalence studies for animal drugs administered orally as soluble powders or as Type A medicated articles manufactured from active pharmaceutical ingredients considered to be soluble in aqueous media.

DATES: Submit either electronic or written comments on the draft guidance by November 29, 2019 to ensure that the Agency considers your comment on this draft guidance before it begins work on the final version of the guidance.

ADDRESSES: You may submit comments on any guidance at any time as follows:

Electronic Submissions

Submit electronic comments in the following way:

• *Federal eRulemaking Portal: https://www.regulations.gov.* Follow the instructions for submitting comments. Comments submitted electronically, including attachments, to *https://www.regulations.gov* will be posted to the docket unchanged. Because your comment will be made public, you are solely responsible for ensuring that your comment does not include any confidential information that you or a third party may not wish to be posted, such as medical information, your or anyone else's Social Security number, or confidential business information, such as a manufacturing process. Please note that if you include your name, contact information, or other information that identifies you in the body of your comments, that information will be posted on *https://www.regulations.gov.*

• If you want to submit a comment with confidential information that you do not wish to be made available to the public, submit the comment as a written/paper submission and in the manner detailed (see ''Written/Paper Submissions'' and ''Instructions'').

Written/Paper Submissions

Submit written/paper submissions as follows:

• *Mail/Hand delivery/Courier (for written/paper submissions):* Dockets Management Staff (HFA–305), Food and Drug Administration, 5630 Fishers Lane, Rm. 1061, Rockville, MD 20852.

• For written/paper comments submitted to the Dockets Management Staff, FDA will post your comment, as well as any attachments, except for information submitted, marked and identified, as confidential, if submitted as detailed in ''Instructions.''

Instructions: All submissions received must include the Docket No. FDA–2019–D–3764 for ''Demonstrating Bioequivalence for Soluble Powder Oral Dosage Form Products and Type A Medicated Articles Manufactured from Active Pharmaceutical Ingredients Considered to be Soluble in Aqueous Media.'' Received comments will be placed in the docket and, except for those submitted as ''Confidential Submissions,'' publicly viewable at *https://www.regulations.gov* or at the Dockets Management Staff between 9 a.m. and 4 p.m., Monday through Friday.

• Confidential Submissions—To submit a comment with confidential information that you do not wish to be made publicly available, submit your comments only as a written/paper submission. You should submit two copies total. One copy will include the information you claim to be confidential with a heading or cover note that states ''THIS DOCUMENT CONTAINS CONFIDENTIAL INFORMATION.'' The Agency will review this copy, including the claimed confidential information, in its consideration of comments. The second copy, which will have the claimed confidential information redacted/blacked out, will be available for public viewing and posted on *https://www.regulations.gov.* Submit both copies to the Dockets Management Staff. If you do not wish your name and contact information to be made publicly available, you can provide this information on the cover sheet and not in the body of your comments and you must identify this information as ''confidential.'' Any information marked as ''confidential'' will not be disclosed except in accordance with 21 CFR 10.20 and other applicable disclosure law. For more information about FDA's posting of comments to public dockets, see 80 FR 56469, September 18, 2015, or access the information at: *https://www.gpo.gov/fdsys/pkg/FR-2015-09-18/pdf/2015-23389.pdf.*

Docket: For access to the docket to read background documents or the electronic and written/paper comments received, go to *https://www.regulations.gov* and insert the docket number, found in brackets in the heading of this document, into the ''Search'' box and follow the prompts and/or go to the Dockets Management Staff, 5630 Fishers Lane, Rm. 1061, Rockville, MD 20852.

You may submit comments on any guidance at any time (see 21 CFR 10.115(g)(5)).

Submit written requests for single copies of the guidance to the Policy and Regulations Staff (HFV–6), Center for Veterinary Medicine, Food and Drug Administration, 7519 Standish Pl., Rockville, MD 20855. Send one self-addressed adhesive label to assist that office in processing your requests. See the **SUPPLEMENTARY INFORMATION** section for electronic access to the draft guidance document.

FOR FURTHER INFORMATION CONTACT:

• *Biopharmaceutics and Pharmacokinetics:* Marilyn Martinez, Center for Veterinary Medicine (HFV–100), Food and Drug Administration, 7500 Standish Pl., Rockville, MD 20855, 240–402–0635, *Marilyn.Martinez@fda.hhs.gov.*

• *Manufacturing Chemistry/Solubility Concerns:* Catherine Finnegan, Center for Veterinary Medicine (HFV–147), Food and Drug Administration, 7500 Standish Pl., Rockville, MD 20855, 240–402–0650, *Catherine.Finnegan@fda.hhs.gov.*

• *Generic Drug Approval Requirements:* Ian S. Hendricks, Center for Veterinary Medicine (HFV–172), Food and Drug Administration, 7500 Standish Pl., Rockville, MD 20855, 240–402–0853, *Ian.Hendricks@fda.hhs.gov.*

SUPPLEMENTARY INFORMATION:

I. Background

FDA is announcing the availability of a draft GFI #171 entitled ''Demonstrating Bioequivalence for Soluble Powder Oral Dosage Form Products and Type A Medicated Articles Manufactured from Active Pharmaceutical Ingredients Considered to be Soluble in Aqueous Media.'' This draft guidance describes how the Agency intends to evaluate requests for waiving the requirement for performing in vivo bioequivalence studies (biowaivers) for animal drugs administered orally as soluble powders or as Type A medicated articles manufactured from active pharmaceutical ingredients (APIs) considered to be soluble in aqueous media (water soluble APIs). This draft guidance expands upon GFI #35, ''Bioequivalence Guidance,'' published November 8, 2006, to include biowaivers for soluble powder oral dosage form products as well as Type A medicated articles manufactured from active pharmaceutical ingredients considered to be soluble in aqueous media. This draft guidance offers particular focus on criteria for the waiver of the requirements for

submitting in vivo bioequivalence study data.

This draft guidance is applicable to generic investigational new animal drug (JINAD) files and to abbreviated new animal drug applications (ANADAs). Although the recommendations in this guidance refer to generic drug applications, the general principles described may also be applicable to new animal drug applications (NADAs), investigational new animal drug (INAD) files, and supplemental NADAs. This draft guidance does not address Type A medicated articles manufactured from active pharmaceutical ingredients considered to be insoluble in aqueous media.

II. Significance of Guidance

This level 1 draft guidance is being issued consistent with FDA's good guidance practices regulation (21 CFR 10.115). The draft guidance, when finalized, will represent the current thinking of FDA on ''Demonstrating Bioequivalence for Soluble Powder Oral Dosage Form Products and Type A Medicated Articles Manufactured from Active Pharmaceutical Ingredients Considered to be Soluble in Aqueous Media.'' It does not establish any rights for any person and is not binding on FDA or the public. You can use an alternative approach if it satisfies the requirements of the applicable statutes and regulations. This guidance is not subject to Executive Order 12866.

III. Paperwork Reduction Act of 1995

This draft guidance refers to collections of information associated with biowaiver requests for generic soluble powder oral dosage form products and Type A medicated articles. These collections of information are subject to review by the Office of Management and Budget (OMB) under the Paperwork Reduction Act of 1995 (44 U.S.C. 3501–3520). The collections of information associated with biowaiver requests for generic soluble powder oral dosage form products and Type A medicated articles are being reviewed by OMB under OMB control number 0910–0669 (see 84 FR 16270 at 16271, April 18, 2019).

IV. Electronic Access

Persons with access to the internet may obtain the draft guidance at either *https://www.fda.gov/AnimalVeterinary/GuidanceComplianceEnforcement/GuidanceforIndustry/default.htm* or *https://www.regulations.gov.*

Dated: September 25, 2019.

Lowell J. Schiller,

Principal Associate Commissioner for Policy.

[FR Doc. 2019–21202 Filed 9–27–19; 8:45 am]

BILLING CODE 4164–01–P

DEPARTMENT OF HEALTH AND HUMAN SERVICES

Food and Drug Administration

[Docket No. FDA–2019–N–007]

Fee for Using a Material Threat Medical Countermeasure Priority Review Voucher in Fiscal Year 2020

AGENCY: Food and Drug Administration, HHS.

ACTION: Notice.

SUMMARY: The Food and Drug Administration (FDA or the Agency) is announcing the fee rate for using a material threat medical countermeasure (MCM) priority review voucher for fiscal year (FY) 2020. The Federal Food, Drug, and Cosmetic Act (FD&C Act), as amended by the 21st Century Cures Act (Cures Act), authorizes FDA to determine and collect material threat MCM priority review user fees for certain applications for review of human drug products when those applications use a material threat MCM priority review voucher. These vouchers are awarded to the sponsors of material threat MCM applications that meet all the requirements of this program and upon FDA approval of such applications. The amount of the fee for using a material threat MCM priority review voucher is determined each FY based on the difference between the average cost incurred by FDA to review a human drug application designated as priority review in the previous FY, and the average cost incurred in the review of an application that is not subject to priority review in the previous FY. This notice establishes the material threat MCM priority review fee rate for FY 2020 and outlines the payment procedures for such fees.

FOR FURTHER INFORMATION CONTACT: Melissa Hurley, Office of Financial Management, Food and Drug Administration, 4041 Powder Mill Rd., Rm. 61075, Beltsville, MD 20705–4304, 240–402–4585.

SUPPLEMENTARY INFORMATION:

I. Background

Section 3086 of the Cures Act (Pub. L. 114–255) added section 565A to the FD&C Act (21 U.S.C. 360bbb–4a). In section 565A of the FD&C Act, Congress encouraged development of material threat MCMs by offering additional incentives for obtaining FDA approval of such products. Under section 565A of the FD&C Act, the sponsor of an eligible material threat MCM application (as defined in section 565A(a)(4)) shall receive a priority review voucher upon approval of the material threat MCM application. The recipient of a material threat MCM priority review voucher may either use the voucher for a future human drug application submitted to FDA under section 505(b)(1) of the FD&C Act (21 U.S.C. 355(b)(1)) or section 351(a) of the Public Health Service Act (42 U.S.C. 262(a)), or transfer (including by sale) the voucher to another party. The voucher may be transferred (including by sale) repeatedly until it ultimately is used for a human drug application submitted to FDA under section 505(b)(1) of the FD&C Act or section 351(a) of the Public Health Service Act. A priority review is a review conducted with a Prescription Drug User Fee Act (PDUFA) goal date of 6 months after the receipt or filing date, depending on the type of application. Information regarding PDUFA goals is available at *https://www.fda.gov/downloads/forindustry/userfees/prescriptiondruguserfee/ucm511438.pdf.*

The sponsor that uses a material threat MCM priority review voucher is entitled to a priority review of its eligible human drug application, but must pay FDA a material threat MCM priority review user fee in addition to any user fee required by PDUFA for the application. Information regarding the material threat MCM priority review voucher program is available at: *https://www.fda.gov/EmergencyPreparedness/Counterterrorism/MedicalCountermeasures/MCMLegalRegulatoryandPolicyFramework/ucm566498.htm.*

This notice establishes the material threat MCM priority review fee rate for FY 2020 at $2,167,116 and outlines FDA's payment procedures for material threat MCM priority review user fees. This rate is effective on October 1, 2019, and will remain in effect through September 30, 2020.

II. Material Threat Medical Countermeasure Priority Review User Fee for FY 2020

FDA interprets section 565A(c)(2) of the FD&C Act as requiring that FDA determine the amount of the material threat MCM priority review user fee each fiscal year based on the difference between the average cost incurred by FDA in the review of a human drug application subject to priority review in the previous fiscal year, and the average cost incurred by FDA in the review of a human drug application that is not

subject to priority review in the previous fiscal year.

A priority review is a review conducted with a PDUFA goal date of 6 months after the receipt or filing date, depending on the type of application. Under the PDUFA goals letter, FDA has committed to reviewing and acting on 90 percent of the applications granted priority review status within this expedited timeframe. Normally, an application for a human drug product will qualify for priority review if the product is intended to treat a serious condition and, if approved, would provide a significant improvement in safety or effectiveness. An application that does not receive a priority designation receives a standard review. Under the PDUFA goals letter, FDA has committed to reviewing and acting on 90 percent of standard applications within 10 months of the receipt or filing date, depending on the type of application. A priority review involves a more intensive level of effort and a higher level of resources than a standard review.

FDA is setting a fee for FY 2020, which is to be based on standard cost data from the previous fiscal year, FY 2019. However, the FY 2019 submission cohort has not been closed out yet, thus the cost data for FY 2019 are not complete. The latest year for which FDA has complete cost data is FY 2018. Furthermore, because FDA has never tracked the cost of reviewing applications that get priority review as a separate cost subset, FDA estimated this cost based on other data that the Agency has tracked. The Agency expects all applications that received priority review would contain clinical data. The application categories with clinical data that for which FDA tracks the cost of review are: (1) New drug applications (NDAs) for a new molecular entity (NME) with clinical data and (2) biologics license applications (BLAs).

The total cost for FDA to review NME NDAs with clinical data and BLAs in FY 2018 was $335,338,639. There was a total of 74 applications in these two categories (53 NME NDAs with clinical data and 21 BLAs). (Note: These numbers exclude the President's Emergency Plan for AIDS Relief NDAs; no investigational new drug review costs are included in this amount.) Forty-eight of these applications (35 NDAs and 13 BLAs) received priority review and the remaining 26 received standard reviews. Because a priority review compresses a review schedule that ordinarily takes 10 months into 6 months, FDA estimates that a multiplier of 1.67 (10 months ÷ 6 months) should be applied to non-priority review costs in estimating the effort and cost of a priority review as compared to a standard review. This multiplier is consistent with published research on this subject, which supports a priority review multiplier in the range of 1.48 to 2.35 (Ref. 1). Using FY 2018 figures, the costs of a priority and standard review are estimated using the following formula:

$$(48\ \alpha \times 1.67) + (26\ \alpha) = \$335{,}338{,}639$$

where ''α'' is the cost of a standard review and ''α times 1.67'' is the cost of a priority review. Using this formula, the cost of a standard review for NME NDAs and BLAs is calculated to be $3,158,804 (rounded to the nearest dollar) and the cost of a priority review for NME NDAs and BLAs is 1.67 times that amount, or $5,275,203 (rounded to the nearest dollar). The difference between these two cost estimates, or $2,116,399, represents the incremental cost of conducting a priority review rather than a standard review.

For the FY 2020 fee, FDA will need to adjust the FY 2018 incremental cost by the average amount by which FDA's average costs increased in the 3 years prior to FY 2019, to adjust the FY 2018 amount for cost increases in FY 2019. That adjustment, published in the **Federal Register** on August 1, 2019 (see 84 FR 37882), setting FY 2020 PDUFA fees, is 2.3964 percent for the most recent year, not compounded. Increasing the FY 2018 incremental priority review cost of $2,116,399 by 2.3964 percent (or 0.023964) results in an estimated cost of $2,167,116 (rounded to the nearest dollar). This is the material threat MCM priority review user fee amount for FY 2020 that must be submitted with a priority review voucher for a human drug application in FY 2020, in addition to any PDUFA fee that is required for such an application.

III. Fee Schedule for FY 2020

The fee rate for FY 2020 is set out in table 1:

TABLE 1—MATERIAL THREAT MEDICAL COUNTERMEASURE PRIORITY REVIEW SCHEDULE FOR FY 2020

Fee category	Fee rate for FY 2020
Application submitted with a material threat MCM priority review voucher in addition to the normal PDUFA fee	$2,167,116

IV. Implementation of Material Threat Medical Countermeasure Priority Review User Fee

Under section 565A(c)(4)(A) of the FD&C Act, the priority review user fee is due upon submission of a human drug application for which the priority review voucher is used. Section 565A(c)(4)(B) of the FD&C Act specifies that the application will be considered incomplete if the priority review user fee and all other applicable user fees are not paid in accordance with FDA payment procedures. In addition, section 565A(c)(4)(C) specifies that FDA may not grant a waiver, exemption, reduction, or refund of any fees due and payable under this section of the FD&C Act.

The material threat MCM priority review fee established in the new fee schedule must be paid for any application with a priority review voucher that is received on or after October 1, 2019. This fee must be paid in addition to any other fee due under PDUFA. Payment must be made in U.S. currency by electronic check, check, bank draft, wire transfer, credit card, or U.S. postal money order payable to the order of the Food and Drug Administration. The preferred payment method is online using electronic check (Automated Clearing House (ACH) also known as eCheck). Secure electronic payments can be submitted using the User Fees Payment Portal at *https://userfees.fda.gov/pay.* (*Note:* Only full payments are accepted. No partial payments can be made online.) Once you search for your invoice, select ''Pay Now'' to be redirected to *Pay.gov*. Note that electronic payment options are based on the balance due. Payment by credit card is available for balances that are less than $25,000. If the balance exceeds this amount, only the ACH option is available. Payments must be made using U.S. bank accounts as well as U.S. credit cards.

FDA has partnered with the U.S. Department of the Treasury to use *Pay.gov,* a web-based payment application, for online electronic payment. The *Pay.gov* feature is available on the FDA website after the user fee ID number is generated.

If paying by paper check, the user fee identification (ID) number should be included on the check, followed by the words ''Material Threat Medical Countermeasure Priority Review.'' All paper checks must be in U.S. currency from a U.S. bank made payable and mailed to: Food and Drug Administration, P.O. Box 979107, St. Louis, MO 63197–9000.

If checks are sent by a courier that requests a street address, the courier can deliver the checks to: U.S. Bank, Attention: Government Lockbox 979107, 1005 Convention Plaza, St. Louis, MO 63101. (Note: This U.S. Bank address is for courier delivery only. If you have any questions concerning courier delivery, contact the U.S. Bank at 314–418–4013. This telephone number is only for questions about courier delivery). The FDA post office box number (P.O. Box 979107) must be written on the check. If needed, FDA's tax identification number is 53–0196965.

If paying by wire transfer, please reference your unique user fee ID number when completing your transfer. The originating financial institution may charge a wire transfer fee. If the financial institution charges a wire transfer fee, it is required to add that amount to the payment to ensure that the invoice is paid in full. The account information is as follows: U.S. Dept. of the Treasury, TREAS NYC, 33 Liberty St., New York, NY 10045, Account Number: 75060099, Routing Number: 021030004, SWIFT: FRNYUS33

V. Reference

The following reference is on display at the Dockets Management Staff (HFA–305), Food and Drug Administration, 5630 Fishers Lane, Rm. 1061, Rockville, MD 20852, and is available for viewing by interested persons between 9 a.m. and 4 p.m., Monday through Friday; it is not available electronically at *https://www.regulations.gov* as this reference is copyright protected. FDA has verified the website address, as of the date this document publishes in the **Federal Register**, but websites are subject to change over time.

1. Ridley, D.B., H.G. Grabowski, and J.L. Moe, ''Developing Drugs for Developing Countries,'' *Health Affairs,* vol. 25, no. 2, pp. 313–324, 2006, available at: *https://www.healthaffairs.org/doi/full/10.1377/hlthaff.25.2.313.*

Dated: September 25, 2019.

Lowell J. Schiller,

Principal Associate Commissioner for Policy.

[FR Doc. 2019–21198 Filed 9–27–19; 8:45 am]

BILLING CODE 4164–01–P

DEPARTMENT OF HEALTH AND HUMAN SERVICES

Food and Drug Administration

[Docket No. FDA–2019–N–0007]

Fee for Using a Rare Pediatric Disease Priority Review Voucher in Fiscal Year 2020

AGENCY: Food and Drug Administration, HHS.

ACTION: Notice.

SUMMARY: The Food and Drug Administration (FDA or the Agency) is announcing the fee rate for using a rare pediatric disease priority review voucher for fiscal year (FY) 2020. The Federal Food, Drug, and Cosmetic Act (FD&C Act), as amended by the Food and Drug Administration Safety and Innovation Act (FDASIA), authorizes FDA to determine and collect rare pediatric disease priority review user fees for certain applications for review of human drug and biological products when those applications use a rare pediatric disease priority review voucher. These vouchers are awarded to sponsors of rare pediatric disease product applications that meet all the requirements of this program and are submitted 90 days or more after July 9, 2012, upon FDA approval of such applications. The amount of the fee for using a rare pediatric disease priority review voucher is determined each FY, based on the difference between the average cost incurred by FDA to review a human drug application designated as priority review in the previous FY, and the average cost incurred in the review of an application that is not subject to priority review in the previous FY. This notice establishes the rare pediatric disease priority review fee rate for FY 2020 and outlines the payment procedures for such fees.

FOR FURTHER INFORMATION CONTACT: Melissa Hurley, Office of Financial Management, Food and Drug Administration, 4041 Powder Mill Rd, Rm. 61075, Beltsville, MD 20705–4304, 240–402–4585.

SUPPLEMENTARY INFORMATION:

I. Background

Section 908 of FDASIA (Pub. L. 112–144) added section 529 to the FD&C Act (21 U.S.C. 360ff). In section 529 of the FD&C Act, Congress encouraged development of new human drugs and biological products for prevention and treatment of certain rare pediatric diseases by offering additional incentives for obtaining FDA approval of such products. Under section 529 of the FD&C Act, the sponsor of an eligible human drug application submitted 90 days or more after July 9, 2012, for a rare pediatric disease (as defined in section 529(a)(3)) shall receive a priority review voucher upon approval of the rare pediatric disease product application. The recipient of a rare pediatric disease priority review voucher may either use the voucher for a future human drug application submitted to FDA under section 505(b)(1) of the FD&C Act (21 U.S.C. 355(b)(1)) or section 351(a) of the Public Health Service Act (42 U.S.C. 262(a)), or transfer (including by sale) the voucher to another party. The voucher may be transferred (including by sale) repeatedly until it ultimately is used for a human drug application submitted to FDA under section 505(b)(1) of the FD&C Act or section 351(a) of the Public Health Service Act. A priority review is a review conducted with a Prescription Drug User Fee Act (PDUFA) goal date of 6 months after the receipt or filing date, depending on the type of application. Information regarding current PDUFA goals is available at *https://www.fda.gov/downloads/forindustry/userfees/prescriptiondruguserfee/ucm511438.pdf.*

The sponsor that uses a rare pediatric disease priority review voucher is entitled to a priority review of its eligible human drug application, but must pay FDA a rare pediatric disease priority review user fee in addition to any user fee required by PDUFA for the application. Information regarding the rare pediatric disease priority review voucher program is available at: *https://www.fda.gov/Drugs/DevelopmentApprovalProcess/DevelopmentResources/ucm375479.htm.*

This notice establishes the rare pediatric disease priority review fee rate for FY 2020 at $2,167,116 and outlines FDA's payment procedures for rare pediatric disease priority review user fees. This rate is effective on October 1, 2019, and will remain in effect through September 30, 2020.

II. Rare Pediatric Priority Review User Fee for FY 2020

Under section 529(c)(2) of the FD&C Act, the amount of the rare pediatric disease priority review user fee is determined each fiscal year based on the difference between the average cost incurred by FDA in the review of a human drug application subject to priority review in the previous fiscal year, and the average cost incurred by FDA in the review of a human drug application that is not subject to priority review in the previous fiscal year.

A priority review is a review conducted with a PDUFA goal date of 6

months after the receipt or filing date, depending on the type of application. Under the PDUFA goals letter, FDA has committed to reviewing and acting on 90 percent of the applications granted priority review status within this expedited timeframe. Normally, an application for a human drug or biological product will qualify for priority review if the product is intended to treat a serious condition and, if approved, would provide a significant improvement in safety or effectiveness. An application that does not receive a priority designation receives a standard review. Under the PDUFA goals letter, FDA has committed to reviewing and acting on 90 percent of standard applications within 10 months of the receipt or filing date depending on the type of application. A priority review involves a more intensive level of effort and a higher level of resources than a standard review.

FDA is setting a fee for FY 2020, which is to be based on standard cost data from the previous fiscal year, FY 2019. However, the FY 2019 submission cohort has not been closed out yet, thus the cost data for FY 2019 are not complete. The latest year for which FDA has complete cost data is FY 2018. Furthermore, because FDA has never tracked the cost of reviewing applications that get priority review as a separate cost subset, FDA estimated this cost based on other data that the Agency has tracked. The Agency expects all applications that received priority review would contain clinical data. The application categories with clinical data for which FDA tracks the cost of review are: (1) New drug applications (NDAs) for a new molecular entity (NME) with clinical data and (2) biologics license applications (BLAs).

The total cost for FDA to review NME NDAs with clinical data and BLAs in FY 2018 was $335,338,639. There were a total of 74 applications in these two categories (53 NME NDAs with clinical data and 21 BLAs). (Note: These numbers exclude the President's Emergency Plan for AIDS Relief NDAs; no investigational new drug review costs are included in this amount.) Forty-eight of these applications (35 NDAs and 13 BLAs) received priority review and the remaining 26 received standard reviews. Because a priority review compresses a review schedule that ordinarily takes 10 months into 6 months, FDA estimates that a multiplier of 1.67 (10 months ÷ 6 months) should be applied to non-priority review costs in estimating the effort and cost of a priority review as compared to a standard review. This multiplier is consistent with published research on this subject, which supports a priority review multiplier in the range of 1.48 to 2.35 (Ref. 1). Using FY 2018 figures, the costs of a priority and standard review are estimated using the following formula:

$$(48\ \alpha \times 1.67) + (26\ \alpha) = \$335{,}338{,}639$$

where ''α'' is the cost of a standard review and ''α times 1.67'' is the cost of a priority review. Using this formula, the cost of a standard review for NME NDAs and BLAs is calculated to be $3,158,804 (rounded to the nearest dollar) and the cost of a priority review for NME NDAs and BLAs is 1.67 times that amount, or $5,275,203 (rounded to the nearest dollar). The difference between these two cost estimates, or $2,116,399, represents the incremental cost of conducting a priority review rather than a standard review.

For the FY 2020 fee, FDA will need to adjust the FY 2018 incremental cost by the average amount by which FDA's average costs increased in the 3 years prior to FY 2019, to adjust the FY 2018 amount for cost increases in FY 2019. That adjustment, published in the **Federal Register** on August 2, 2019 (84 FR 37882), setting the FY 2020 PDUFA fees, is 2.3964 percent for the most recent year, not compounded. Increasing the FY 2018 incremental priority review cost of $2,116,399 by 2.3964 percent (or 0.023964) results in an estimated cost of $2,167,116 (rounded to the nearest dollar). This is the rare pediatric disease priority review user fee amount for FY 2020 that must be submitted with a priority review voucher for a human drug application in FY 2020, in addition to any PDUFA fee that is required for such an application.

III. Fee Schedule for FY 2020

The fee rate for FY 2020 is set out in table 1:

TABLE 1—RARE PEDIATRIC DISEASE PRIORITY REVIEW SCHEDULE FOR FY 2020

Fee category	Fee rate for FY 2020
Application submitted with a rare pediatric disease priority review voucher in addition to the normal PDUFA fee	$2,167,116

IV. Implementation of Rare Pediatric Disease Priority Review User Fee

Under section 529(c)(4)(A) of the FD&C Act, the priority review user fee is due (*i.e.* the obligation to pay the fee is incurred) when an sponsor notifies FDA of its intent to use the voucher. Section 529(c)(4)(B) of the FD&C Act specifies that the application will be considered incomplete if the priority review user fee and all other applicable user fees are not paid in accordance with FDA payment procedures. In addition, section 529(c)(4)(C) specifies that FDA may not grant a waiver, exemption, reduction, or refund of any fees due and payable under this section of the FD&C Act.

The rare pediatric disease priority review fee established in the new fee schedule must be paid for any fee that is received on or after October 1, 2019. In order to comply with this requirement, the sponsor must notify FDA 90 days prior to submission of the human drug application that is the subject of a priority review voucher of an intent to submit the human drug application, including the estimated submission date.

Upon receipt of this notification, FDA will issue an invoice to the sponsor who has incurred for the rare pediatric disease priority review voucher fee. The invoice will include instructions on how to pay the fee via wire transfer, check, or online payments.

As noted in section II, if a sponsor uses a rare pediatric disease priority review voucher for a human drug application, the sponsor would incur the rare pediatric disease priority review voucher fee in addition to any PDUFA fee that is required for the application. The sponsor would need to follow FDA's normal procedures for timely payment of the PDUFA fee for the human drug application.

Payment must be made in U.S. currency by electronic check, check, bank draft, wire transfer, credit card, or U.S. postal money order payable to the order of the Food and Drug Administration. The preferred payment method is online using electronic check (Automated Clearing House (ACH) also known as eCheck). Secure electronic payments can be submitted using the User Fees Payment Portal at *https://userfees.fda.gov/pay* (Note: Only full payments are accepted. No partial

payments can be made online). Once you search for your invoice, select ''Pay Now'' to be redirected to *Pay.gov*. Note that electronic payment options are based on the balance due. Payment by credit card is available for balances that are less than $25,000. If the balance exceeds this amount, only the ACH option is available. Payments must be made using U.S. bank accounts as well as U.S. credit cards.

If paying by paper check the invoice number should be included on the check, followed by the words ''Rare Pediatric Disease Priority Review.'' All paper checks must be in U.S. currency from a U.S. bank made payable and mailed to: Food and Drug Administration, P.O. Box 979107, St. Louis, MO 63197–9000.

If checks are sent by a courier that requests a street address, the courier can deliver the checks to: U.S. Bank, Attention: Government Lockbox 979107, 1005 Convention Plaza, St. Louis, MO 63101. (Note: This U.S. Bank address is for courier delivery only. If you have any questions concerning courier delivery contact the U.S. Bank at 314–418–4013. This telephone number is only for questions about courier delivery). The FDA post office box number (P.O. Box 979107) must be written on the check. If needed, FDA's tax identification number is 53–0196965.

If paying by wire transfer, please reference your invoice number when completing your transfer. The originating financial institution may charge a wire transfer fee. If the financial institution charges a wire transfer fee it is required to add that amount to the payment to ensure that the invoice is paid in full. The account information is as follows: U.S. Dept. of the Treasury, TREAS NYC, 33 Liberty St., New York, NY 10045, Account Number: 75060099, Routing Number: 021030004, SWIFT: FRNYUS33.

V. Reference

The following reference is on display at the Dockets Management Staff (HFA–305), Food and Drug Administration, 5630 Fishers Lane, Rm. 1061, Rockville, MD 20852) and is available for viewing by interested persons between 9 a.m. and 4 p.m., Monday through Friday; it is not available electronically at *https://www.regulations.gov* as this reference is copyright protected. FDA has verified the website address, as of the date this document publishes in the **Federal Register**, but websites are subject to change over time.

1. Ridley, D.B., H.G. Grabowski, and J.L. Moe, ''Developing Drugs for Developing Countries,'' *Health Affairs,* vol. 25, no. 2, pp. 313–324, 2006, available at: *https://www.healthaffairs.org/doi/full/10.1377/hlthaff.25.2.313.*

Dated: September 25, 2019.

Lowell J. Schiller,

Principal Associate Commissioner for Policy.

[FR Doc. 2019–21197 Filed 9–27–19; 8:45 am]

BILLING CODE 4164–01–P

DEPARTMENT OF HEALTH AND HUMAN SERVICES

Food and Drug Administration

[Docket No. FDA–2019–N–0007]

Fee for Using a Tropical Disease Priority Review Voucher in Fiscal Year 2020

AGENCY: Food and Drug Administration, HHS.

ACTION: Notice.

SUMMARY: The Food and Drug Administration (FDA or the Agency) is announcing the fee rates for using a tropical disease priority review voucher for fiscal year (FY) 2020. The Federal Food, Drug, and Cosmetic Act (FD&C Act), as amended by the Food and Drug Administration Amendments Act of 2007 (FDAAA), authorizes FDA to determine and collect priority review user fees for certain applications for review of drug and biological products when those applications use a tropical disease priority review voucher. These vouchers are awarded to the sponsors of certain tropical disease product applications, submitted after September 27, 2007, upon FDA approval of such applications. The amount of the fee submitted to FDA with applications using a tropical disease priority review voucher is determined each fiscal year based on the difference between the average cost incurred by FDA to review a human drug application designated as priority review in the previous fiscal year and the average cost incurred in the review of an application that is not subject to priority review in the previous fiscal year. This notice establishes the tropical disease priority review fee rate for FY 2020.

FOR FURTHER INFORMATION CONTACT: Melissa Hurley, Office of Financial Management, Food and Drug Administration, 4041 Powder Mill Rd., Rm. 61075, Beltsville, MD 20705–4304, 240–402–4585.

SUPPLEMENTARY INFORMATION:

I. Background

Section 1102 of FDAAA (Pub. L. 110–85) added section 524 to the FD&C Act (21 U.S.C. 360n). In section 524, Congress encouraged development of new drug and biological products for prevention and treatment of tropical diseases by offering additional incentives for obtaining FDA approval of such products. Under section 524, the sponsor of an eligible human drug application submitted after September 27, 2007, for a tropical disease (as defined in section 524(a)(3) of the FD&C Act) shall receive a priority review voucher upon approval of the tropical disease product application (assuming other criteria are met). The recipient of a tropical disease priority review voucher may either use the voucher with a future submission to FDA under section 505(b)(1) of the FD&C Act (21 U.S.C. 355(b)(1)) or section 351(a) of the Public Health Service Act (42 U.S.C. 262), or transfer (including by sale) the voucher to another party. The voucher may be transferred (including by sale) repeatedly until it ultimately is used for a human drug application submitted to FDA under section 505(b)(1) of the FD&C Act or section 351(a) of the Public Health Service Act. A priority review is a review conducted with a Prescription Drug User Fee Act (PDUFA) goal date of 6 months after the receipt or filing date, depending upon the type of application. Information regarding the PDUFA goals is available at: *https://www.fda.gov/downloads/forindustry/userfees/prescriptiondruguserfee/ucm511438.pdf.*

The sponsor that uses a priority review voucher is entitled to a priority review but must pay FDA a priority review user fee in addition to any other fee required by PDUFA. FDA published guidance on its website about how this tropical disease priority review voucher program operates (available at: *https://www.fda.gov/downloads/Drugs/GuidanceComplianceRegulatoryInformation/Guidances/ucm080599.pdf*).

This notice establishes the tropical disease priority review fee rate for FY 2020 as $2,167,116 and outlines FDA's process for implementing the collection of the priority review user fees. This rate is effective on October 1, 2019, and will remain in effect through September 30, 2020, for applications submitted with a tropical disease priority review voucher. The payment of this priority review user fee is required in addition to the payment of any other fee that would normally apply to such an application under PDUFA before FDA will consider the application complete and acceptable for filing.

II. Tropical Disease Priority Review User Fee for FY 2020

FDA interprets section 524(c)(2) of the FD&C Act as requiring that FDA determine the amount of the tropical disease priority review user fee each fiscal year based on the difference between the average cost incurred by FDA in the review of a human drug application subject to priority review in the previous fiscal year and the average cost incurred by FDA in the review of a human drug application that is not subject to priority review in the previous fiscal year.

A priority review is a review conducted with a PDUFA goal date of 6 months after the receipt or filing date, depending on the type of application. Under the PDUFA goals letter, FDA has committed to reviewing and acting on 90 percent of the applications granted priority review status within this expedited timeframe. Normally, an application for a human drug or biological product will qualify for priority review if the product is intended to treat a serious condition and, if approved, would provide a significant improvement in safety or effectiveness. An application that does not receive a priority designation receives a standard review. Under the PDUFA goals letter, FDA committed to reviewing and acting on 90 percent of standard applications within 10 months of the receipt or filing date, depending on the type of application. A priority review involves a more intensive level of effort and a higher level of resources than a standard review.

FDA is setting fees for FY 2020, which is to be based on standard cost data from the previous fiscal year, FY 2019. However, the FY 2019 submission cohort has not been closed out yet, thus the cost data for FY 2019 are not complete. The latest year for which FDA has complete cost data is FY 2018. Furthermore, because FDA has never tracked the cost of reviewing applications that get priority review as a separate cost subset, FDA estimated this cost based on other data that the Agency has tracked. The Agency expects all applications that received priority review would contain clinical data. The application categories with clinical data for which FDA tracks the cost of review are: (1) New drug applications (NDAs) for a new molecular entity (NME) with clinical data and (2) biologics license applications (BLAs).

The total cost for FDA to review NME NDAs with clinical data and BLAs in FY 2018 was $335,338,639. There was a total of 74 applications in these two categories (53 NME NDAs with clinical data and 21 BLAs). (*Note:* These numbers exclude the President's Emergency Plan for AIDS Relief NDAs; no investigational new drug review costs are included in this amount.) Of these applications, 48 (35 NDAs and 13 BLAs) received priority review and the remaining 26 received standard reviews. Because a priority review compresses a review that ordinarily takes 10 months into 6 months, FDA estimates that a multiplier of 1.67 (10 months divided by 6 months) should be applied to non-priority review costs in estimating the effort and cost of a priority review as compared to a standard review. This multiplier is consistent with published research on this subject, which supports a priority review multiplier in the range of 1.48 to 2.35 (Ref. 1). Using FY 2018 figures, the costs of a priority and standard review are estimated using the following formula:

$$(48\ \alpha \times 1.67) + (26\ \alpha) = \$335{,}338{,}639$$

where ''α'' is the cost of a standard review and ''α times 1.67'' is the cost of a priority review.

Using this formula, the cost of a standard review for NME NDAs and BLAs is calculated to be $3,158,804 (rounded to the nearest dollar) and the cost of a priority review for NME NDAs and BLAs is 1.67 times that amount, or $5,275,203 (rounded to the nearest dollar). The difference between these two cost estimates, or $2,116,399, represents the incremental cost of conducting a priority review rather than a standard review.

For the FY 2020 fee, FDA will need to adjust the FY 2018 incremental cost by the average amount by which FDA's average costs increased in the 3 years prior to FY 2019, to adjust the FY 2018 amount for cost increases in FY 2019. That adjustment, published in the **Federal Register** on August 2, 2019 (84 FR 37882), setting FY 2020 PDUFA fees, is 2.3964 percent for the most recent year, not compounded. Increasing the FY 2018 incremental priority review cost of $2,116,399 by 2.3964 percent (or 0.023964) results in an estimated cost of $2,167,116 (rounded to the nearest dollar). This is the tropical disease priority review user fee amount for FY 2020 that must be submitted with a priority review voucher for a human drug application in FY 2020, in addition to any PDUFA fee that is required for such an application.

III. Fee Schedule for FY 2020

The fee rate for FY 2020 is set out in table 1:

TABLE 1—TROPICAL DISEASE PRIORITY REVIEW SCHEDULE FOR FY 2020

Fee category	Fee rate for FY 2020
Application submitted with a tropical disease priority review voucher in addition to the normal PDUFA fee	$2,167,116

IV. Implementation of Tropical Disease Priority Review User Fee

Under section 524(c)(4)(A) of the FD&C Act, the priority review user fee is due upon submission of a human drug application for which the priority review voucher is used. Section 524(c)(4)(B) of the FD&C Act specifies that the application will be considered incomplete if the priority review user fee and all other applicable user fees are not paid in accordance with FDA payment procedures. In addition, FDA may not grant a waiver, exemption, reduction, or refund of any fees due and payable under section 524 of the FD&C Act (see section 524(c)(4)(C)), and FDA may not collect priority review voucher fees ''except to the extent provided in advance in appropriation Acts.'' (Section 524(c)(5)(B) of the FD&C Act.)

The tropical disease priority review fee established in the new fee schedule must be paid for any application that is received on or after October 1, 2019, and submitted with a priority review voucher. This fee must be paid in addition to any other fee due under PDUFA. Payment should be made in U.S. currency by electronic check, check, bank draft, wire transfer, credit card, or U.S. postal money order payable to the order of the Food and Drug Administration. The preferred payment method is online using electronic check (Automated Clearing House (ACH) also known as eCheck). Secure electronic payments can be submitted using the User Fees Payment Portal at *https://userfees.fda.gov/pay.* (*Note:* Only full payments are accepted. No partial payments can be made

online). Once you search for your invoice, select ''Pay Now'' to be redirected to *Pay.gov.* Note that electronic payment options are based on the balance due. Payment by credit card is available for balances that are less than $25,000. If the balance exceeds this amount, only the ACH option is available. Payments should be made using U.S bank accounts as well as U.S. credit cards.

FDA has partnered with the U.S. Department of the Treasury to use *Pay.gov,* a web-based payment application, for online electronic payment. The *Pay.gov* feature is available on the FDA website after the user fee identification (ID) number is generated.

If paying by paper check, the user fee ID number should be included on the check, followed by the words ''Tropical Disease Priority Review.'' All paper checks should be in U.S. currency from a U.S. bank made payable and mailed to: Food and Drug Administration, P.O. Box 979107, St. Louis, MO 63197–9000.

If checks are sent by a courier that requests a street address, the courier can deliver the checks to: U.S. Bank, Attention: Government Lockbox 979107, 1005 Convention Plaza, St. Louis, MO 63101. (*Note:* This U.S. Bank address is for courier delivery only.) If you have any questions concerning courier delivery, contact the U.S. Bank at 314–418–4013. (This telephone number is only for questions about courier delivery.) The FDA post office box number (P.O. Box 979107) must be written on the check. If needed, FDA's tax identification number is 53–0196965.

If paying by wire transfer, please reference your unique user fee ID number when completing your transfer. The originating financial institution may charge a wire transfer fee. If the financial institution charges a wire transfer fee, it is required to add that amount to the payment to ensure that the invoice is paid in full. The account information is as follows: U.S. Dept. of the Treasury, TREAS NYC, 33 Liberty St., New York, NY 10045, Account Number: 75060099, Routing Number: 021030004, SWIFT: FRNYUS33.

V. Reference

The following reference is on display with the Dockets Management Staff (HFA–305), Food and Drug Administration, 5630 Fishers Lane, Rm. 1061, Rockville, MD 20852, and is available for viewing by interested persons between 9 a.m. and 4 p.m., Monday through Friday; it is not available electronically at *https://www.regulations.gov* as this reference is copyright protected. FDA has verified the website address, as of the date this document publishes in the **Federal Register**, but websites are subject to change over time.

1. Ridley, D.B., H.G. Grabowski, and J.L. Moe, ''Developing Drugs for Developing Countries,'' *Health Affairs,* vol. 25, no. 2, pp. 313–324, 2006, available at: *https://www.healthaffairs.org/doi/full/10.1377/hlthaff.25.2.313.*

Dated: September 25, 2019.

Lowell J. Schiller,

Principal Associate Commissioner for Policy.

[FR Doc. 2019–21196 Filed 9–27–19; 8:45 am]

BILLING CODE 4164–01–P

DEPARTMENT OF HEALTH AND HUMAN SERVICES

Health Resources and Services Administration

Meeting of the National Advisory Council on Nurse Education and Practice

AGENCY: Health Resources and Services Administration (HRSA), Department of Health and Human Services (HHS).

ACTION: Notice.

SUMMARY: In accordance with the Federal Advisory Committee Act, this notice announces that the National Advisory Council on Nurse Education and Practice (NACNEP or Council) has scheduled a public meeting. Information about NACNEP, the agenda, and materials for this meeting can be found on the NACNEP website at *https://www.hrsa.gov/advisory-committees/nursing/index.html.*

DATES: November 5, 2019, 8:30 a.m.–4:00 p.m. Eastern Time (ET) and November 6, 2019, 8:30 a.m.–2:30 p.m. ET.

ADDRESSES: This meeting will be held by teleconference, and/or Adobe Connect webinar.

- *Webinar link: https://hrsa.connectsolutions.com/nacnep/*
- *Conference call-in number:* 1–888–455–4141 Passcode: FACA Meeting

FOR FURTHER INFORMATION CONTACT: Camillus Ezeike, Ph.D., JD, LLM, RN, CHC, CPHRM, Senior Advisor Division of Nursing and Public Health, Bureau of Health Workforce, HRSA, 5600 Fishers Lane, 11N–120, Rockville, Maryland 20857; 301–443–2866; or *BHWNACNEP@hrsa.gov.*

SUPPLEMENTARY INFORMATION: NACNEP provides advice and recommendations to the Secretary of HHS and the U.S. Congress on policy issues related to the activities carried out under Title VIII of the Public Health Service (PHS) Act, including the range of issues relating to the nurse workforce, education, and practice improvement. NACNEP also prepares and submits an annual report to the Secretary of HHS and Congress describing its activities, including NACNEP's findings and recommendations concerning activities under Title VIII, as required by the PHS Act.

During the November 5–6, 2019, meeting, NACNEP will welcome new members to the Council and discuss strategic priorities for nursing education and practice in preparation for the development of the Council's 17th Report to Congress. Agenda items are subject to change as priorities dictate. Refer to the NACNEP website for updated information concerning the November 2019 NACNEP meeting.

Members of the public will have the opportunity to provide comments. Public participants may submit written statements in advance of the scheduled meeting. Oral comments will be honored in the order they are requested and may be limited as time allows. Requests to submit a written statement or make oral comments to NACNEP should be sent to Camillus Ezeike using the contact information above at least 3 business days before the meeting date. Individuals who plan to attend and need special assistance or another reasonable accommodation should notify Camillus Ezeike at the address and phone number listed above at least 10 business days prior to the meeting.

Maria G. Button,

Executive Secretariat.

[FR Doc. 2019–21069 Filed 9–27–19; 8:45 am]

BILLING CODE 4165–15–P

DEPARTMENT OF HEALTH AND HUMAN SERVICES

National Committee on Vital and Health Statistics: Meeting

Pursuant to the Federal Advisory Committee Act, the Department of Health and Human Services (HHS) announces the following advisory committee meeting.

Name: National Committee on Vital and Health Statistics (NCVHS), Full Committee Meeting.

Dates and Times:

Wednesday, November 13, 2019: 9:00 a.m.–5:30 p.m.

Thursday, November 14, 2019: 8:30 a.m.–3:00 p.m.

Place: Centers for Disease Control and Prevention, National Center for Health Statistics, 3311 Toledo Road,

Auditorium, Hyattsville, Maryland 20782.

Status: Open.

Purpose: At the November 13–14, 2019 meeting, the Committee will deliberate draft recommendations for the HHS Secretary, continue with activities outlined in the NCVHS 2019 workplan, and hold discussions on several health data policy topics.

Anticipated action items during this meeting include a letter that outlines recommendations to the Secretary regarding preparations for implementation of ICD–11 and accompanying proposed research and communication agendas developed by the Committee.

The Subcommittee on Standards will report on continued progress on the elements of a Predictability Roadmap in follow up to its July 2019 visioning meeting and December 2018 hearing—including continued focus on the function and purpose of the Designated Standards Maintenance Organizations (DSMOs) in light of changes in the health care standards environment and the need for harmonization of administrative and clinical standards. The Subcommittee anticipates continuing discussion and possible activities in collaboration with the Office of the National Coordinator for Health Information and Technology (ONC) regarding the opportunity for burden reduction through convergence of administrative and clinical data standards using the prior authorization transaction as a use-case.

The Subcommittee on Privacy, Confidentiality and Security will lead a discussion of the full Committee on assessing priority areas for focus and activity. The Subcommittee on Population Health will lead discussion on the Federal Data Strategy Year One Action Plan. Finally, the Committee will consider and discuss its workplan for calendar year 2020 together with the NCVHS Strategic Plan.

The times and topics are subject to change. Please refer to the posted agenda for any updates.

Contact Person For More Information: Substantive program information may be obtained from Rebecca Hines, MHS, Executive Secretary, NCVHS, National Center for Health Statistics, Centers for Disease Control and Prevention, 3311 Toledo Road, Hyattsville, Maryland 20782, telephone (301) 458–4715. Summaries of meetings and a roster of Committee members are available on the home page of the NCVHS website: *www.ncvhs.hhs.gov,* where further information including an agenda and instructions to access the broadcast of the meeting will also be posted.

Should you require reasonable accommodation, please contact the CDC Office of Equal Employment Opportunity on (770) 488–3210 as soon as possible.

Dated: September 24, 2019.

Sharon Arnold,

Associate Deputy Assistant Secretary for Planning and Evaluation, Science and Data Policy, Office of the Assistant Secretary for Planning and Evaluation.

[FR Doc. 2019–21074 Filed 9–27–19; 8:45 am]

BILLING CODE 4150–05–P

DEPARTMENT OF HEALTH AND HUMAN SERVICES

[Document Identifier: OS–0945–0003]

Agency Information Collection Request. 30-Day Public Comment Request

AGENCY: Office of the Secretary, HHS.

ACTION: Notice.

SUMMARY: In compliance with the requirement of the Paperwork Reduction Act of 1995, the Office of the Secretary (OS), Department of Health and Human Services, is publishing the following summary of a proposed collection for public comment.

DATES: Comments on the Information Collection Request (ICR) must be received on or before October 30, 2019.

ADDRESSES: Submit your comments to *OIRA_submission@omb.eop.gov* or via facsimile to (202) 395–5806.

FOR FURTHER INFORMATION CONTACT: Sherrette Funn, *Sherrette.Funn@hhs.gov* or (202) 795–7714. When submitting comments or requesting information, please include the document identifier 0945–0003–New–30D and project title for reference.

SUPPLEMENTARY INFORMATION: Interested persons are invited to send comments regarding this burden estimate or any other aspect of this collection of information, including any of the following subjects: (1) The necessity and utility of the proposed information collection for the proper performance of the agency's functions; (2) the accuracy of the estimated burden; (3) ways to enhance the quality, utility, and clarity of the information to be collected; and (4) the use of automated collection techniques or other forms of information technology to minimize the information collection burden.

Title of the Collection: HIPAA Privacy, Security, and Breach Notification Rules, and Supporting Regulations Contained in 45 CFR parts 160 and 164.

Type of Collection: Extension.

OMB No. 0945–0003: Office for Civil Rights (OCR)—Health Information Privacy Division.

Abstract: Office for Civil Rights (OCR) requests approval to extend this existing, approved collection without changing any collection requirements while OCR obtains public comment through a Notice of Proposed Rulemaking (NPRM) proposing modifications to the HIPAA Rules that will affect the hourly burdens associated with the Rules. This notice does, however, make the following revisions to estimates provided in the 60-day public comment request, which do not change the collection requirements: (1) Lower the estimated number of individuals who call an entity's toll-free number for information after being affected by a breach requiring substitute notice to reflect a more realistic estimate of the proportion of individuals who choose to call; and (2) correct an error from the 2016 ICR notice that underestimated the average number of individuals affected per breach because it relied on older breach data. This notice also incorporates data from the 60-day public comment request which recognizes for the first time the burdens resulting from the pre-existing, ongoing requirements for business associates to report breaches of PHI to their covered entities.

We did not receive public comment on the 60-day public comment request published on July 19, 2019. We expect to receive robust public comment on existing burdens associated with compliance with the HIPAA Rules and on changes in burden that could result from the modifications proposed in the NPRM. OCR will update this ICR to reflect the input we receive.

Likely Respondents: HIPAA covered entities, business associates, individuals, and professional and trade associations of covered entities and business associates.

ESTIMATED ANNUALIZED BURDEN TABLE

Forms (if necessary)	Respondents (if necessary)	Number of respondents	Number of responses per respondents	Average burden per response	Total burden hours
45 CFR 160.204 Process for Requesting Exception Determinations (states or persons).	A state's chief elected official or designee.	1	1	16	16
45 CFR 164.308 Risk Analysis—Documentation.	Covered entities; business associates.	1,700,000	1	10	17,000,000
45 CFR 164.308 Information System Activity Review—Documentation.	Covered entities; business associates.	1,700,000	12	0.75	15,300,000
45 CFR 164.308 Security Reminders—Periodic Updates.	Covered entities; business associates.	1,700,000	12	1	20,400,000
45 CFR 164.308 Security Incidents (other than breaches)—Documentation.	Covered entities; business associates.	1,700,000	52	5	442,000,000
45 CFR 164.308 Contingency Plan—Testing and Revision.	Covered entities; business associates.	1,700,000	1	8	13,600,000
45 CFR 164.308 Contingency Plan—Criticality Analysis.	Covered entities; business associates.	1,700,000	1	4	6,800,000
45 CFR 164.310 Maintenance Records ...	Covered entities; business associates.	1,700,000	12	6	122,400,000
45 CFR 164.314 Security Incidents—Business Associate reporting of incidents (other than breach) to Covered Entities.	Business associates	1,000,000	12	20	240,000,000
45 CFR 164.316 Documentation—Review and Update.	Covered entities; business associates.	1,700,000	1	6	10,200,000
45 CFR 164.404 Individual Notice—Written and Email Notice (drafting).	Covered entities	58,482	1	0.5	29,241
45 CFR 164.404 Individual Notice—Written and Email Notice (preparing and documenting notification).	Covered entities	58,482	1	0.5	29,241
45 CFR 164.404 Individual Notice—Written and Email Notice (processing and sending).	Covered entities	58,482	1,941	0.008	908,108
45 CFR 164.404 Individual Notice—Substitute Notice (posting or publishing).	Covered entities	2,746	1	1	2,746
45 CFR 164.404 Individual Notice—Substitute Notice (staffing toll-free number).	Covered entities	2,746	1	3.42	9,391
45 CFR 164.404 Individual Notice—Substitute Notice (individuals' voluntary burden to call toll-free number for information).	Covered entities	113,264	1	0.125	14,158
45 CFR 164.406 Media Notice	Covered entities	267	1	1.25	334
45 CFR 164.408 Notice to Secretary (notice for breaches affecting 500 or more individuals).	Covered entities	267	1	1.25	334
45 CFR 164.408 Notice to Secretary (notice for breaches affecting less than 500 individuals).	Covered entities	58,215	1	1	58,215
45 CFR 164.410 Business associate notice to covered entity—500 or more affected individuals.	Business Associates	20	1	50	1,000
45 CFR 164.410 Business associate notice to covered entity—Less than 500 affected individuals.	Business Associates	1,165	1	8	9,320
45 CFR 164.414 500 or More Affected Individuals (investigating and documenting breach).	Covered entities	267	1	50	13,350
45 CFR 164.414 Less than 500 Affected Individuals (investigating and documenting breach)—affecting 10–499.	Covered entities	2,479	1	8	19,832
45 CFR 164.414 Less than 500 Affected Individuals (investigating and documenting breach)—affecting <10.	Covered entities	55,736	1	4	222,944
45 CFR 164.504 Uses and Disclosures—Organizational Requirements.	Covered entities	700,000	1	0.083333333	58,333
45 CFR 164.508 Uses and Disclosures for Which Individual authorization is required.	Covered entities	700,000	1	1	700,000
45 CFR 165.512 Uses and Disclosures for Research Purposes.	Covered entities	113,524	1	0.083333333	9,460

ESTIMATED ANNUALIZED BURDEN TABLE—Continued

Forms (if necessary)	Respondents (if necessary)	Number of respondents	Number of responses per respondents	Average burden per response	Total burden hours
45 CFR 164.520 Notice of Privacy Practices for Protected Health Information (health plans—periodic distribution of NPPs by paper mail).	Covered entities—health plans	100,000,000	1	0.004166667	416,667
45 CFR 164.520 Notice of Privacy Practices for Protected Health Information (health plans—periodic distribution of NPPs by electronic mail).	Covered entities—health plans	100,000,000	1	0.002783333	278,333
45 CFR 164.520 Notice of Privacy Practices for Protected Health Information (health care providers—dissemination and acknowledgement).	Covered entities—health care providers.	613,000,000	1	0.05	30,650,000
45 CFR 164.522 Rights to Request Privacy Protection for Protected Health Information.	Covered entities—health care providers, health plans.	20,000	1	0.05	1,000
45 CFR 164.524 Access of Individuals to Protected Health Information (disclosures).	Covered entities—health care providers, health plans, clearinghouses.	200,000	1	0.05	10,000
45 CFR 164.526 Amendment of Protected Health Information (requests).	Covered entities—health care providers, health plans, clearinghouses.	150,000	1	0.083333333	12,500
45 CFR 164.526 Amendment of Protected Health Information (denials).	Covered entities—health care providers, health plans, clearinghouses.	50,000	1	0.083333333	4,167
45 CFR 164.528 Accounting for Disclosures of Protected Health Information.	Covered entities—health care providers, health plans, clearinghouses.	5,000	1	0.05	250
Total					921,158,941

Debbie Kramer,

HHS Information Collection Reports Clearance Officer.

[FR Doc. 2019–21031 Filed 9–27–19; 8:45 am]

BILLING CODE 4153–01–P

DEPARTMENT OF HEALTH AND HUMAN SERVICES

National Institutes of Health

National Institute of Neurological Disorders & Stroke (NINDS); Notice of Organizational Change

AGENCY: National Institutes of Health, HHS.

ACTION: Notice.

SUMMARY: The National Institute of Neurological Disorders and Stroke (NINDS) will launch a public information website and host a webinar to enable public discussion regarding NINDS proposal to reorganize the Office of Communications and Public Liaison and Office of Scientific Liaison.

DATES: NINDS will launch public website information at *https://www.ninds.nih.gov/About-NINDS/Public-Hearing-NINDS-Office-Neuroscience-Communications-and-Engagement-Proposal* on October 01, 2019. A public webinar will be held on October 17, 2019 at 1:00 p.m. EST. A recording of the webinar will be posted no later than October 18, 2019 at 3:00 p.m. EST. Any interested person may file written comments by sending an email to *NINDSReorgComments@nih.gov* by October 31, 2019. The statement should include the individual's name, and when applicable, professional affiliation. NINDS will respond to comments by email no later than November 07, 2019.

ADDRESSES: The following email address has been established for questions and/or comments on the reorganization: *NINDSReorgComments@nih.gov*.

FOR FURTHER INFORMATION CONTACT: Mary Coats, Management Analyst, National Institute of Neurological Disorders & Stroke (NINDS), *NINDSReorgComments@nih.gov*, 301–594–4489.

SUPPLEMENTARY INFORMATION: Pursuant to the NIH Reform Act of 2006 (42 U.S.C. Sec. 281 (d)(4)), NINDS will launch a public information website at *https://www.ninds.nih.gov/About-NINDS/Public-Hearing-NINDS-Office-Neuroscience-Communications-and-Engagement-Proposal* and host a webinar to enable public discussion regarding NINDS proposal to reorganize the Office of Communications and Public Liaison and Office of Scientific Liaison. Details of the reorganization and information regarding the webinar is available on the Institute's website at *https://www.ninds.nih.gov/About-NINDS/Public-Hearing-NINDS-Office-Neuroscience-Communications-and-Engagement-Proposal.*

This reorganization will support efforts to Optimize NIH as it will foster greater collaboration and sharing of resources across NINDS.

Dated: September 19, 2019.

Walter J. Koroshetz,

Director, National Institute of Neurological Disorders and Stroke, National Institutes of Health.

[FR Doc. 2019–21189 Filed 9–27–19; 8:45 am]

BILLING CODE 4140–01–P

DEPARTMENT OF HEALTH AND HUMAN SERVICES

National Institutes of Health

National Heart, Lung, and Blood Institute; Notice of Closed Meeting

Pursuant to section 10(d) of the Federal Advisory Committee Act, as amended, notice is hereby given of the following meeting. The meeting will be closed to the public in accordance with the provisions set forth in sections 552b(c)(4) and 552b(c)(6), Title 5 U.S.C.,

as amended. The grant applications and the discussions could disclose confidential trade secrets or commercial property such as patentable material, and personal information concerning individuals associated with the grant applications, the disclosure of which would constitute a clearly unwarranted invasion of personal privacy.

Name of Committee: Heart, Lung, and Blood Initial Review Group; NHLBI Mentored Clinical and Basic Science Review Committee, NHLBI ''Mentored Clinical and Basic Science Review Committee'' MCBS.

Date: November 7–8, 2019.

Time: 10:30 a.m. to 12:00 p.m.

Agenda: To review and evaluate grant applications.

Place: Crowne Plaza National Airport, 1480 Crystal Drive, Arlington, MD 22202.

Contact Person: Keith A. Mintzer, Ph.D., Scientific Review Officer, Office of Scientific Review/DERA, National Heart, Lung, and Blood Institute, 6701 Rockledge Drive, Room 7186, Bethesda, MD 20892–7924, 301–827–7949, *mintzerk@nhlbi.nih.gov*.

(Catalogue of Federal Domestic Assistance Program Nos. 93.233, National Center for Sleep Disorders Research; 93.837, Heart and Vascular Diseases Research; 93.838, Lung Diseases Research; 93.839, Blood Diseases and Resources Research, National Institutes of Health, HHS)

Dated: September 24, 2019.

Ronald J. Livingston, Jr.,

Program Analyst, Office of Federal Advisory Committee Policy.

[FR Doc. 2019–21055 Filed 9–27–19; 8:45 am]

BILLING CODE 4140–01–P

DEPARTMENT OF HEALTH AND HUMAN SERVICES

National Institutes of Health

Center for Scientific Review; Notice of Closed Meetings

Pursuant to section 10(d) of the Federal Advisory Committee Act, as amended, notice is hereby given of the following meetings.

The meetings will be closed to the public in accordance with the provisions set forth in sections 552b(c)(4) and 552b(c)(6), Title 5 U.S.C., as amended. The grant applications and the discussions could disclose confidential trade secrets or commercial property such as patentable material, and personal information concerning individuals associated with the grant applications, the disclosure of which would constitute a clearly unwarranted invasion of personal privacy.

Name of Committee: Vascular and Hematology Integrated Review Group; Atherosclerosis and Inflammation of the Cardiovascular System Study Section.

Date: October 17–18, 2019.

Time: 8:00 a.m. to 1:00 p.m.

Agenda: To review and evaluate grant applications.

Place: The William F. Bolger Center, 9600 Newbridge Drive, Potomac, MD 20854.

Contact Person: Natalia Komissarova, Ph.D., Scientific Review Officer, Center for Scientific Review, National Institutes of Health, 6701 Rockledge Drive, Room 5207, MSC 7846, Bethesda, MD 20892, 301–435–1206, *komissar@mail.nih.gov*.

Name of Committee: Center for Scientific Review Special Emphasis Panel; RFA–AI19–022: US-South Africa Program for Collaborative HIV/AIDS Biomedical Research.

Date: October 25, 2019.

Time: 10:00 a.m. to 6:00 p.m.

Agenda: To review and evaluate grant applications.

Place: National Institutes of Health, Rockledge II, 6701 Rockledge Drive, Bethesda, MD 20892 (Virtual Meeting).

Contact Person: Shalanda A. Bynum, Ph.D., Scientific Review Officer, Center for Scientific Review, National Institutes of Health, 6701 Rockledge Drive, Room 3206, Bethesda, MD 20892, 301–755–4355, *bynumsa@csr.nih.gov*.

(Catalogue of Federal Domestic Assistance Program Nos. 93.306, Comparative Medicine; 93.333, Clinical Research, 93.306, 93.333, 93.337, 93.393–93.396, 93.837–93.844, 93.846–93.878, 93.892, 93.893, National Institutes of Health, HHS)

Dated: September 23, 2019.

Tyeshia M. Roberson,

Program Analyst, Office of Federal Advisory Committee Policy.

[FR Doc. 2019–21056 Filed 9–27–19; 8:45 am]

BILLING CODE 4140–01–P

DEPARTMENT OF HEALTH AND HUMAN SERVICES

National Institutes of Health

Center for Scientific Review; Notice of Closed Meetings

Pursuant to section 10(d) of the Federal Advisory Committee Act, as amended, notice is hereby given of the following meetings.

The meetings will be closed to the public in accordance with the provisions set forth in sections 552b(c)(4) and 552b(c)(6), Title 5 U.S.C., as amended. The grant applications and the discussions could disclose confidential trade secrets or commercial property such as patentable material, and personal information concerning individuals associated with the grant applications, the disclosure of which would constitute a clearly unwarranted invasion of personal privacy.

Name of Committee: Brain Disorders and Clinical Neuroscience Integrated Review Group; Diseases and Pathophysiology of the Visual System Study Section.

Date: October 28–29, 2019.

Time: 8:00 a.m. to 5:00 p.m.

Agenda: To review and evaluate grant applications.

Place: Embassy Suites—Chevy Chase Pavilion 4300 Military Road NW, Washington, DC 20015.

Contact Person: Nataliya Gordiyenko, Ph.D., Scientific Review Officer, Center for Scientific Review, National Institutes of Health, 6701 Rockledge Drive, Room 5202, MSC 7846, Bethesda, MD 20892, 301.435.1265, *gordiyenkon@csr.nih.gov*.

Name of Committee: Brain Disorders and Clinical Neuroscience Integrated Review Group; Acute Neural Injury and Epilepsy Study Section.

Date: October 28–29, 2019.

Time: 8:00 a.m. to 5:00 p.m.

Agenda: To review and evaluate grant applications.

Place: Renaissance, Washington, DC Hotel, 999 Ninth Street NW, Washington, DC 20001–4427.

Contact Person: Paula Elyse Schauwecker, Ph.D., Scientific Review Officer, Center for Scientific Review, National Institutes of Health, 6701 Rockledge Drive, Room 5201, Bethesda, MD 20892, 301–760–8207, *schauweckerpe@csr.nih.gov.*

Name of Committee: Oncology 2—Translational Clinical Integrated Review Group; Radiation Therapeutics and Biology Study Section.

Date: October 28–29, 2019.

T*ime:* 8:00 a.m. to 5:00 p.m.

Agenda: To review and evaluate grant applications.

Place: Hyatt Regency Bethesda, One Bethesda Metro Center, 7400 Wisconsin Avenue, Bethesda, MD 20814.

Contact Person: Bo Hong, Ph.D., Scientific Review Officer, Center for Scientific Review, National Institutes of Health, 6701 Rockledge Drive, Room 6194, MSC 7804, Bethesda, MD 20892, 301–996–6208, *hongb@csr.nih.gov.*

Name of Committee: Population Sciences and Epidemiology Integrated Review Group; Cancer, Heart, and Sleep Epidemiology B Study Section.

Date: October 28–29, 2019.

Time: 8:00 a.m. to 6:00 p.m.

Agenda: To review and evaluate grant applications.

Place: Melrose Hotel, 2430 Pennsylvania Ave. NW, Washington, DC 20037.

Contact Person: Gniesha Yvonne Dinwiddie, Ph.D., Scientific Review Officer, Center for Scientific Review, National Institutes of Health, 6701 Rockledge Drive, Room 3137, Bethesda, MD 20892, 301–827–7235, *dinwiddiegy@csr.nih.gov.*

Name of Committee: Healthcare Delivery and Methodologies Integrated Review Group; Clinical Management of Patients in Community-based Settings Study Section.

Date: October 28–29, 2019.

Time: 8:00 a.m. to 6:00 p.m.

Agenda: To review and evaluate grant applications.

Place: InterContinental Chicago Hotel, 505 North Michigan Avenue, Chicago, IL 60611.

Contact Person: Lauren Fordyce, Ph.D., Scientific Review Officer, Center for Scientific Review, National Institutes of

Health, 6701 Rockledge Drive, Room 3214, Bethesda, MD 20892, 301–827–8269, *fordycelm@mail.nih.gov.*

Name of Committee: Oncology 2—Translational Clinical Integrated Review Group; Developmental Therapeutics Study Section.

Date: October 28–29, 2019.

Time: 8:00 a.m. to 5:00 p.m.

Agenda: To review and evaluate grant applications.

Place: Ritz-Carlton Hotel at Pentagon City, 1250 South Hayes Street, Arlington, VA 22202.

Contact Person: Nicholas J. Donato, Ph.D., Scientific Review Officer, Center for Scientific Review, National Institutes of Health, 6701 Rockledge Drive, Room 4040, Bethesda, MD 20892, 301–827–4810, *nick.donato@nih.gov.*

Name of Committee: Genes, Genomes, and Genetics Integrated Review Group; Molecular Genetics B Study Section.

Date: October 28, 2019.

Time: 8:00 a.m. to 6:00 p.m.

Agenda: To review and evaluate grant applications.

Place: Melrose Hotel, 2430 Pennsylvania Avenue NW, Washington, DC 20037.

Contact Person: Emily Foley, Ph.D., Scientific Review Officer, Center for Scientific Review, 6701 Rockledge Drive, Room 2206, Genes, Genomes, Genetics IRG, National Institute of Health, Bethesda, MD 20892, 301–435–0627, *emily.foley@nih.gov.*

Name of Committee: Biobehavioral and Behavioral Processes Integrated Review Group; Cognition and Perception Study Section.

Date: October 28–29, 2019.

Time: 8:00 a.m. to 5:00 p.m.

Agenda: To review and evaluate grant applications.

Place: Canopy by Hilton, 940 Rose Avenue North, Bethesda, MD 20852.

Contact Person: Devon Rene Brost Oskvig, Ph.D., Scientific Review Officer, Center for Scientific Review, National Institutes of Health, 6701 Rockledge Drive, Room 3172, Bethesda, MD 20892, 301–402–4045, *brostd@csr.nih.gov.*

Name of Committee: Oncology 1-Basic Translational Integrated Review Group, Tumor Progression and Metastasis Study Section.

Date: October 28–29, 2019.

Time: 8:00 a.m. to 5:00 p.m.

Agenda: To review and evaluate grant applications.

Place: Embassy Suites at the Chevy Chase Pavilion, 4300 Military Road NW, Washington, DC 20015.

Contact Person: Rolf Jakobi, Ph.D., Scientific Review Officer, Center for Scientific Review, National Institutes of Health, 6701 Rockledge Drive, Room 6187, MSC 7806, Bethesda, MD 20892, 301–495–1718, *jakobir@mail.nih.gov.*

Name of Committee: Bioengineering Sciences & Technologies Integrated Review Group, Gene and Drug Delivery Systems Study Section.

Date: October 29–30, 2019.

Time: 7:30 a.m. to 6:00 p.m.

Agenda: To review and evaluate grant applications.

Place: Hyatt at Olive 8, 1635 8th Avenue, Seattle, WA 98101.

Contact Person: Leslie S Itsara, Ph.D., Scientific Review Officer, Center for Scientific Review, 6701 Rockledge Drive, Bethesda, MD 20892, 301–402–5174 *leslie.itsara@nih.gov.*

Name of Committee: Endocrinology, Metabolism, Nutrition and Reproductive Sciences Integrated Review Group, Cellular, Molecular and Integrative Reproduction Study Section.

Date: October 29, 2019.

Time: 8:00 a.m. to 6:00 p.m.

Agenda: To review and evaluate grant applications.

Place: Embassy Suites Hotel, 4300 Military Road, Washington, DC 20015.

Contact Person: Gary Hunnicutt, Ph.D., Scientific Review Officer, Center for Scientific Review, National Institutes of Health, 6701 Rockledge Drive, Room 6164, MSC 7892, Bethesda, MD 20892, 301–435–0229, *hunnicuttgr@csr.nih.gov.*

(Catalogue of Federal Domestic Assistance Program Nos. 93.306, Comparative Medicine; 93.333, Clinical Research, 93.306, 93.333, 93.337, 93.393–93.396, 93.837–93.844, 93.846–93.878, 93.892, 93.893, National Institutes of Health, HHS)

Dated: September 24, 2019.

Melanie J. Pantoja,

Program Analyst, Office of Federal Advisory Committee Policy.

[FR Doc. 2019–21054 Filed 9–27–19; 8:45 am]

BILLING CODE 4140–01–P

DEPARTMENT OF HEALTH AND HUMAN SERVICES

Substance Abuse and Mental Health Services Administration

Agency Information Collection Activities: Proposed Collection; Comment Request

In compliance with Section 3506(c)(2)(A) of the Paperwork Reduction Act of 1995 concerning opportunity for public comment on proposed collections of information, the Substance Abuse and Mental Health Services Administration (SAMHSA) will publish periodic summaries of proposed projects. To request more information on the proposed projects or to obtain a copy of the information collection plans, call the SAMHSA Reports Clearance Officer on (240) 276–1243.

Comments are invited on: (a) Whether the proposed collections of information are necessary for the proper performance of the functions of the agency, including whether the information shall have practical utility; (b) the accuracy of the agency's estimate of the burden of the proposed collection of information; (c) ways to enhance the quality, utility, and clarity of the information to be collected; and (d) ways to minimize the burden of the collection of information on respondents, including through the use of automated collection techniques or other forms of information technology.

Proposed Project: Voluntary Customer Satisfaction Surveys To Implement Executive Order 12862 in the Substance Abuse and Mental Health Services Administration (SAMHSA)—(OMB No. 0930–0197)—Extension

SAMHSA provides significant services directly to the public, including treatment providers and State substance abuse and mental health agencies, through a range of mechanisms, including publications, training, meetings, technical assistance and websites. Many of these services are focused on information dissemination activities. The purpose of this submission is to extend the existing generic approval for such surveys.

The primary use for information gathered is to identify strengths and weaknesses in current service provisions by SAMHSA and to make improvements that are practical and feasible. Several of the customer satisfaction surveys expected to be implemented under this approval will provide data for measurement of program effectiveness under the Government Performance and Results Act (GPRA). Information from these customer surveys will be used to plan and redirect resources and efforts to improve or maintain a high quality of service to health care providers and members of the public. Focus groups may be used to develop the survey questionnaire in some instances.

The estimated annual hour burden is as follows:

Type of data collection	Number of respondents	Responses/ respondent	Hours/ response	Total hours
Focus groups	250	1	2.50	625
Self-administered, mail, telephone and e-mail surveys	89,750	1	.250	22,438
Total	90,000			23,063

Send comments to Summer King, SAMHSA Reports Clearance Officer, 5600 Fishers Lane, Room 15E57–B, Rockville, Maryland 20857, *OR* email a copy to *summer.king@samhsa.hhs.gov.* Written comments should be received by November 29, 2019.

Summer King,

Statistician.

[FR Doc. 2019–21133 Filed 9–27–19; 8:45 am]

BILLING CODE 4162–20–P

DEPARTMENT OF HEALTH AND HUMAN SERVICES

Substance Abuse and Mental Health Services Administration

Agency Information Collection Activities: Proposed Collection; Comment Request

In compliance with Section 3506(c)(2)(A) of the Paperwork Reduction Act of 1995 concerning opportunity for public comment on proposed collections of information, the Substance Abuse and Mental Health Services Administration (SAMHSA) will publish periodic summaries of proposed projects. To request more information on the proposed projects or to obtain a copy of the information collection plans, call the SAMHSA Reports Clearance Officer on (240) 276–1112.

Comments are invited on: (a) Whether the proposed collections of information are necessary for the proper performance of the functions of the agency, including whether the information shall have practical utility; (b) the accuracy of the agency's estimate of the burden of the proposed collection of information; (c) ways to enhance the quality, utility, and clarity of the information to be collected; and (d) ways to minimize the burden of the collection of information on respondents, including through the use of automated collection techniques or other forms of information technology.

Proposed Project: National Mental Health Services Survey (N–MHSS) (OMB No. 0930–0119)—Revision

The Substance Abuse and Mental Health Services Administration (SAMHSA), Center for Behavioral Health Statistics and Quality (CBHSQ) is requesting a revision to the National Mental Health Services Survey (N–MHSS) (OMB No. 0930–0119), which expires on January 31, 2020. The N–MHSS provides annual national and state-level data on the number and characteristics of mental health treatment facilities in the United States and biennial national and state-level data on the number and characteristics of persons treated in these facilities. The information in the N–MHSS is needed to assess the nature and extent of these resources, to identify gaps in services, and to provide a database for treatment referrals.

The request for OMB approval will include a request to conduct the N–MHSS and the between-survey updates in 2020, 2021, and 2022. This update is a procedure for collecting services data from newly identified facilities between main cycles of the survey and will be used to improve the listing of treatment facilities in the online Behavioral Health Treatment Services Locator.

The N–MHSS will provide updated information about facilities for SAMHSA's online Behavioral Health Treatment Services Locator (see: *https://findtreatment.samhsa.gov*), which was last updated with information from the N–MHSS in 2018. A full-scale N–MHSS will be conducted in 2020 and 2022 to collect (1) information about facilities needed for updating the online Locator, such as the facility name and address, specific services offered, and special client groups served and (2) additional information about client counts and the demographics of persons treated in these facilities. An abbreviated N–MHSS (N–MHSS-Locator Survey) will be conducted in 2021 only to update the information about facilities in the online Locator. Three small surveys are proposed for adding new facilities to the online Locator as they become known to SAMHSA. Both the 2021 N–MHSS-Locator Survey and the addition of new facilities to the online Locator will use the same N–MHSS-Locator Survey instrument.

This request for a revision seeks to change the content of the currently approved abbreviated N–MHSS (*i.e.,* N–MHSS-Locator) survey instrument, and the previously approved 2018 full-scale N–MHSS (OMB No. 0930–0119) to accommodate two related N–MHSS activities:

(1) Collection of information from the total N–MHSS universe of mental health treatment facilities during 2020, 2021, and 2022; and

(2) collection of information on newly identified facilities throughout the year as they are identified so that new facilities can quickly be added to the online Locator.

The survey mode for both data collection activities will be web with telephone follow-up. A paper questionnaire will also be available to facilities who request one.

The database resulting from the N–MHSS will be used to update SAMHSA's online Behavioral Health Treatment Services Locator and to produce an electronic version of a national directory of mental health facilities, for use by the general public, behavioral health professionals, and treatment service providers. In addition, a data file derived from the survey will be used to produce a summary report providing national and state-level outcomes. The summary report and a public-use data file will be used by researchers, mental health professionals, State governments, the U.S. Congress, and the general public.

The request for OMB approval will include a request to conduct a full-scale N–MHSS in 2020 and 2022, and an abbreviated N–MHSS-Locator survey in 2021.

The following table summarizes the estimated annual response burden for the I–BHS and the N–MHSS:

SUMMARY OF ESTIMATED ANNUAL BURDEN FOR THE N–MHSS

Facility respondent	Number of respondents	Responses per respondent	Average hours per response	Total burden hours
Facilities in full-survey N–MHSS universe in 2020 and 2022	17,000	1	0.75	12,750
Newly identified facilities in Between-Survey Update in 2017, 2018, and 2019 [1] [2]	1,700	1	0.42	714
Facilities in N–MHSS-Locator Survey universe in 2021	17,000	1	0.42	7,140
Average Annual Total	18,700	1	0.59	11,118

[1] Throughout the year, approximately ten percent of facilities close or merge and a similar number of new facilities are identified.
[2] Collection of information on newly identified facilities throughout the year, as they are identified, so that new facilities can quickly be added to the Locator.

To stay current with the field and to collect policy relevant information, SAMHSA will add a series of questions about facilities offering pharmacotherapy for the treatment of serious mental illness (SMI), in particular information on the first- and second-generation antipsychotics used by these facilities. Also, a series of questions on crisis services were added to the survey. The N–MHSS will also be collecting information on facilities providing services to persons experiencing first episode psychosis (FEP), which was not asked in previous versions of the survey. In consultation with experts in the field, some categories and wording were updated to reflect current terminology in the field.

Send comments to Summer King, SAMHSA Reports Clearance Officer, 5600 Fishers Lane, Room 15E21–B, Rockville, MD 20857 *OR* email a copy at *summer.king@samhsa.hhs.gov.* Written comments should be received by November 29, 2019.

Summer King,

Statistician.

[FR Doc. 2019–21137 Filed 9–27–19; 8:45 am]

BILLING CODE 4162–20–P

DEPARTMENT OF HOMELAND SECURITY

Federal Emergency Management Agency

[Docket ID FEMA–2019–0002]

Final Flood Hazard Determinations

AGENCY: Federal Emergency Management Agency, DHS.

ACTION: Notice.

SUMMARY: Flood hazard determinations, which may include additions or modifications of Base Flood Elevations (BFEs), base flood depths, Special Flood Hazard Area (SFHA) boundaries or zone designations, or regulatory floodways on the Flood Insurance Rate Maps (FIRMs) and where applicable, in the supporting Flood Insurance Study (FIS) reports have been made final for the communities listed in the table below.

The FIRM and FIS report are the basis of the floodplain management measures that a community is required either to adopt or to show evidence of having in effect in order to qualify or remain qualified for participation in the Federal Emergency Management Agency's (FEMA's) National Flood Insurance Program (NFIP). In addition, the FIRM and FIS report are used by insurance agents and others to calculate appropriate flood insurance premium rates for buildings and the contents of those buildings.

DATES: The date of March 6, 2020 has been established for the FIRM and, where applicable, the supporting FIS report showing the new or modified flood hazard information for each community.

ADDRESSES: The FIRM, and if applicable, the FIS report containing the final flood hazard information for each community is available for inspection at the respective Community Map Repository address listed in the tables below and will be available online through the FEMA Map Service Center at *https://msc.fema.gov* by the date indicated above.

FOR FURTHER INFORMATION CONTACT: Rick Sacbibit, Chief, Engineering Services Branch, Federal Insurance and Mitigation Administration, FEMA, 400 C Street SW, Washington, DC 20472, (202) 646–7659, or (email) *patrick.sacbibit@fema.dhs.gov;* or visit the FEMA Map Information eXchange (FMIX) online at *https://www.floodmaps.fema.gov/fhm/fmx_main.html.*

SUPPLEMENTARY INFORMATION: The Federal Emergency Management Agency (FEMA) makes the final determinations listed below for the new or modified flood hazard information for each community listed. Notification of these changes has been published in newspapers of local circulation and 90 days have elapsed since that publication. The Deputy Associate Administrator for Insurance and Mitigation has resolved any appeals resulting from this notification.

This final notice is issued in accordance with section 110 of the Flood Disaster Protection Act of 1973, 42 U.S.C. 4104, and 44 CFR part 67. FEMA has developed criteria for floodplain management in floodprone areas in accordance with 44 CFR part 60.

Interested lessees and owners of real property are encouraged to review the new or revised FIRM and FIS report available at the address cited below for each community or online through the FEMA Map Service Center at *https://msc.fema.gov.*

The flood hazard determinations are made final in the watersheds and/or communities listed in the table below.

(Catalog of Federal Domestic Assistance No. 97.022, ''Flood Insurance.'')

Michael M. Grimm,

Assistant Administrator for Risk Management, Department of Homeland Security, Federal Emergency Management Agency.

Community	Community map repository address
Escambia County, Alabama and Incorporated Areas Docket No.: FEMA–B–1868	
City of Atmore	City Hall, 201 East Louisville Avenue, Atmore, AL 36502.

Community	Community map repository address
Unincorporated Areas of Escambia County	Escambia County Emergency Management Agency, 314 Belleville Avenue, Brewton, AL 36426.
Glades County, Florida and Incorporated Areas Docket No.: FEMA–B–1849	
City of Moore Haven	City Hall, 299 Riverside Drive, Moore Haven, FL 33471.
Unincorporated Areas of Glades County	Glades County Development Department, 198 6th Street, Moore Haven, FL 33471.
Nye County, Nevada and Incorporated Areas Docket No.: FEMA–B–1673	
Unincorporated Areas of Nye County	Nye County Planning Department, 250 North Highway 160, Suite 1, Pahrump, NV 89060.

[FR Doc. 2019–21057 Filed 9–27–19; 8:45 am]

BILLING CODE 9110–12–P

DEPARTMENT OF HOMELAND SECURITY

Federal Emergency Management Agency

[Docket ID FEMA–2019–0002; Internal Agency Docket No. FEMA–B–1963]

Proposed Flood Hazard Determinations

AGENCY: Federal Emergency Management Agency, DHS.

ACTION: Notice.

SUMMARY: Comments are requested on proposed flood hazard determinations, which may include additions or modifications of any Base Flood Elevation (BFE), base flood depth, Special Flood Hazard Area (SFHA) boundary or zone designation, or regulatory floodway on the Flood Insurance Rate Maps (FIRMs), and where applicable, in the supporting Flood Insurance Study (FIS) reports for the communities listed in the table below. The purpose of this notice is to seek general information and comment regarding the preliminary FIRM, and where applicable, the FIS report that the Federal Emergency Management Agency (FEMA) has provided to the affected communities. The FIRM and FIS report are the basis of the floodplain management measures that the community is required either to adopt or to show evidence of having in effect in order to qualify or remain qualified for participation in the National Flood Insurance Program (NFIP). In addition, the FIRM and FIS report, once effective, will be used by insurance agents and others to calculate appropriate flood insurance premium rates for new buildings and the contents of those buildings.

DATES: Comments are to be submitted on or before December 30, 2019.

ADDRESSES: The Preliminary FIRM, and where applicable, the FIS report for each community are available for inspection at both the online location *https://www.fema.gov/preliminaryfloodhazarddata* and the respective Community Map Repository address listed in the tables below. Additionally, the current effective FIRM and FIS report for each community are accessible online through the FEMA Map Service Center at *https://msc.fema.gov* for comparison.

You may submit comments, identified by Docket No. FEMA–B–1963, to Rick Sacbibit, Chief, Engineering Services Branch, Federal Insurance and Mitigation Administration, FEMA, 400 C Street SW, Washington, DC 20472, (202) 646–7659, or (email) *patrick.sacbibit@fema.dhs.gov.*

FOR FURTHER INFORMATION CONTACT: Rick Sacbibit, Chief, Engineering Services Branch, Federal Insurance and Mitigation Administration, FEMA, 400 C Street SW, Washington, DC 20472, (202) 646–7659, or (email) *patrick.sacbibit@fema.dhs.gov;* or visit the FEMA Map Information eXchange (FMIX) online at *https://www.floodmaps.fema.gov/fhm/fmx_main.html.*

SUPPLEMENTARY INFORMATION: FEMA proposes to make flood hazard determinations for each community listed below, in accordance with section 110 of the Flood Disaster Protection Act of 1973, 42 U.S.C. 4104, and 44 CFR 67.4(a).

These proposed flood hazard determinations, together with the floodplain management criteria required by 44 CFR 60.3, are the minimum that are required. They should not be construed to mean that the community must change any existing ordinances that are more stringent in their floodplain management requirements. The community may at any time enact stricter requirements of its own or pursuant to policies established by other Federal, State, or regional entities. These flood hazard determinations are used to meet the floodplain management requirements of the NFIP and are used to calculate the appropriate flood insurance premium rates for new buildings built after the FIRM and FIS report become effective.

The communities affected by the flood hazard determinations are provided in the tables below. Any request for reconsideration of the revised flood hazard information shown on the Preliminary FIRM and FIS report that satisfies the data requirements outlined in 44 CFR 67.6(b) is considered an appeal. Comments unrelated to the flood hazard determinations also will be considered before the FIRM and FIS report become effective.

Use of a Scientific Resolution Panel (SRP) is available to communities in support of the appeal resolution process. SRPs are independent panels of experts in hydrology, hydraulics, and other pertinent sciences established to review conflicting scientific and technical data and provide recommendations for resolution. Use of the SRP only may be exercised after FEMA and local communities have been engaged in a collaborative consultation process for at least 60 days without a mutually acceptable resolution of an appeal. Additional information regarding the SRP process can be found online at *https://www.floodsrp.org/pdfs/srp_overview.pdf.*

The watersheds and/or communities affected are listed in the tables below. The Preliminary FIRM, and where applicable, FIS report for each community are available for inspection at both the online location *https://www.fema.gov/preliminaryfloodhazarddata* and the respective Community Map Repository address listed in the tables. For communities

with multiple ongoing Preliminary studies, the studies can be identified by the unique project number and Preliminary FIRM date listed in the tables. Additionally, the current effective FIRM and FIS report for each community are accessible online through the FEMA Map Service Center at *https://msc.fema.gov* for comparison.

(Catalog of Federal Domestic Assistance No. 97.022, ''Flood Insurance.'')

Michael M. Grimm,

Assistant Administrator for Risk Management, Department of Homeland Security, Federal Emergency Management Agency.

Community	Community map repository address
Kauai County, Hawaii	
Project: 18–09–0029S Preliminary Date: May 24, 2019	
Kauai County	Kauai County Department of Public Works, 4444 Rice Street, Lihue, HI 96766.

[FR Doc. 2019–21052 Filed 9–27–19; 8:45 am]

BILLING CODE 91101–12–P

DEPARTMENT OF HOMELAND SECURITY

Federal Emergency Management Agency

[Docket ID FEMA–2019–0002; Internal Agency Docket No. FEMA–B–1959]

Proposed Flood Hazard Determinations

AGENCY: Federal Emergency Management Agency, DHS.

ACTION: Notice.

SUMMARY: Comments are requested on proposed flood hazard determinations, which may include additions or modifications of any Base Flood Elevation (BFE), base flood depth, Special Flood Hazard Area (SFHA) boundary or zone designation, or regulatory floodway on the Flood Insurance Rate Maps (FIRMs), and where applicable, in the supporting Flood Insurance Study (FIS) reports for the communities listed in the table below. The purpose of this notice is to seek general information and comment regarding the preliminary FIRM, and where applicable, the FIS report that the Federal Emergency Management Agency (FEMA) has provided to the affected communities. The FIRM and FIS report are the basis of the floodplain management measures that the community is required either to adopt or to show evidence of having in effect in order to qualify or remain qualified for participation in the National Flood Insurance Program (NFIP). In addition, the FIRM and FIS report, once effective, will be used by insurance agents and others to calculate appropriate flood insurance premium rates for new buildings and the contents of those buildings.

DATES: Comments are to be submitted on or before December 30, 2019.

ADDRESSES: The Preliminary FIRM, and where applicable, the FIS report for each community are available for inspection at both the online location *https://www.fema.gov/preliminaryfloodhazarddata* and the respective Community Map Repository address listed in the tables below. Additionally, the current effective FIRM and FIS report for each community are accessible online through the FEMA Map Service Center at *https://msc.fema.gov* for comparison.

You may submit comments, identified by Docket No. FEMA–B–1959, to Rick Sacbibit, Chief, Engineering Services Branch, Federal Insurance and Mitigation Administration, FEMA, 400 C Street SW, Washington, DC 20472, (202) 646–7659, or (email) *patrick.sacbibit@fema.dhs.gov.*

FOR FURTHER INFORMATION CONTACT: Rick Sacbibit, Chief, Engineering Services Branch, Federal Insurance and Mitigation Administration, FEMA, 400 C Street SW, Washington, DC 20472, (202) 646–7659, or (email) *patrick.sacbibit@fema.dhs.gov;* or visit the FEMA Map Information eXchange (FMIX) online at *https://www.floodmaps.fema.gov/fhm/fmx_main.html.*

SUPPLEMENTARY INFORMATION: FEMA proposes to make flood hazard determinations for each community listed below, in accordance with section 110 of the Flood Disaster Protection Act of 1973, 42 U.S.C. 4104, and 44 CFR 67.4(a).

These proposed flood hazard determinations, together with the floodplain management criteria required by 44 CFR 60.3, are the minimum that are required. They should not be construed to mean that the community must change any existing ordinances that are more stringent in their floodplain management requirements. The community may at any time enact stricter requirements of its own or pursuant to policies established by other Federal, State, or regional entities. These flood hazard determinations are used to meet the floodplain management requirements of the NFIP and are used to calculate the appropriate flood insurance premium rates for new buildings built after the FIRM and FIS report become effective.

The communities affected by the flood hazard determinations are provided in the tables below. Any request for reconsideration of the revised flood hazard information shown on the Preliminary FIRM and FIS report that satisfies the data requirements outlined in 44 CFR 67.6(b) is considered an appeal. Comments unrelated to the flood hazard determinations also will be considered before the FIRM and FIS report become effective.

Use of a Scientific Resolution Panel (SRP) is available to communities in support of the appeal resolution process. SRPs are independent panels of experts in hydrology, hydraulics, and other pertinent sciences established to review conflicting scientific and technical data and provide recommendations for resolution. Use of the SRP only may be exercised after FEMA and local communities have been engaged in a collaborative consultation process for at least 60 days without a mutually acceptable resolution of an appeal. Additional information regarding the SRP process can be found online at *https://www.floodsrp.org/pdfs/srp_overview.pdf.*

The watersheds and/or communities affected are listed in the tables below. The Preliminary FIRM, and where applicable, FIS report for each community are available for inspection at both the online location *https://www.fema.gov/preliminaryfloodhazarddata* and the respective Community Map Repository address listed in the tables. For communities with multiple ongoing Preliminary studies, the studies can be identified by

the unique project number and Preliminary FIRM date listed in the tables. Additionally, the current effective FIRM and FIS report for each community are accessible online through the FEMA Map Service Center at *https://msc.fema.gov* for comparison.

(Catalog of Federal Domestic Assistance No. 97.022, ''Flood Insurance.'')

Michael M. Grimm,

Assistant Administrator for Risk Management, Department of Homeland Security, Federal Emergency Management Agency.

Community	Community map repository address
Archer County, Texas and Incorporated Areas Project: 17–06–1173S Preliminary Date: April 19, 2019	
City of Archer City	City Hall, 118 South Sycamore Street, Archer City, TX 76351.
City of Holliday	City Office, 110 West Olive Street, Holliday, TX 76366.
City of Lakeside City	Lakeside City City Hall, 47 Donna Street, Wichita Falls, TX 76308.
City of Megargel	City Hall, 1302 Cedar Street, Megargel, TX 76370.
City of Scotland	City Hall, 727 Avenue L, Scotland, TX 76379.
City of Windthorst	Windthorst City Sewer Plant, 361 Sewer Plant Road, Windthorst, TX 76389.
Unincorporated Areas of Archer County	Archer County Courthouse Emergency Management Office, 100 South Center Street, Archer City, TX 76351.
Jack County, Texas and Incorporated Areas Project: 17–06–1176S Preliminary Date: April 19, 2019	
City of Bryson	City Hall, 102 North Depot Street, Bryson, TX 76427.
City of Jacksboro	Fire Department, 128 East College Street, Jacksboro, TX 76458.
Unincorporated Areas of Jack County	Jack County Office, 100 North Main Street, Jacksboro, TX 76458.

[FR Doc. 2019–21050 Filed 9–27–19; 8:45 am]

BILLING CODE 9110–12–P

DEPARTMENT OF HOUSING AND URBAN DEVELOPMENT

[Docket No. FR–7011–N–41]

30-Day Notice of Proposed Information Collection: Generic Customer Satisfaction Surveys

AGENCY: Office of the Chief Information Officer, HUD.

ACTION: Notice.

SUMMARY: HUD is seeking approval from the Office of Management and Budget (OMB) for the information collection described below. In accordance with the Paperwork Reduction Act, HUD is requesting comment from all interested parties on the proposed collection of information. The purpose of this notice is to allow for an additional 30 days of public comment.

DATES: *Comments Due Date: October 30, 2019.*

ADDRESSES: Interested persons are invited to submit comments regarding this proposal. Comments should refer to the proposal by name and/or OMB Control Number and should be sent to: Colette Pollard, Reports Management Officer, QDAM, Department of Housing and Urban Development, 451 7th Street SW, Room 4176, Washington, DC 20410–5000; telephone 202–402–3400 (this is not a toll-free number) or email at *Colette.Pollard@hud.gov* for a copy of the proposed forms or other available information. Persons with hearing or speech impairments may access this number through TTY by calling the toll-free Federal Relay Service at (800) 877–8339.

FOR FURTHER INFORMATION CONTACT: Colette Pollard, Reports Management Officer, QDAM, Department of Housing and Urban Development, 451 7th Street SW, Washington, DC 20410; email Colette Pollard at *Colette.Pollard@hud.gov* or telephone 202–402–3400. This is not a toll-free number. Persons with hearing or speech impairments may access this number through TTY by calling the toll-free Federal Relay Service at (800) 877–8339.

Copies of available documents submitted to OMB may be obtained from Ms. Pollard.

SUPPLEMENTARY INFORMATION: This notice informs the public that HUD is seeking approval from OMB for the information collection described in Section A. The **Federal Register** hat solicited public comments in the information for a period of 60 days was published July 8, 2019

A. Overview of Information Collection

Title of Information Collection: Generic Customer Satisfaction Surveys.

OMB Approval Number: 2535–0116.

Type of Request: Extension on a currently approved.

Form Number: None.

Description of the need for the information and proposed use: Executive Order 12862, ''Setting Customer Service Standards'' requires that Federal agencies provide the highest quality service to our customers by identifying them and determining what they think about our services. The surveys covered in the request for a generic clearance will provide HUD a means to gather this data directly from our customers. HUD will conduct various customer satisfaction surveys to gather feedback and data directly from our customers to determine the kind and quality of services and products they want and expect to receive.

Estimated Number of Respondents: 117,248.

Estimated Number of Responses: 117,248.

Frequency of Response: 1.

Average Hours per Response: 0.32.

Total Estimated Burden: 37,519.36.

B. Solicitation of Public Comment

This notice is soliciting comments from members of the public and affected parties concerning the collection of information described in Section A on the following:

(1) Whether the proposed collection of information is necessary for the proper performance of the functions of the agency, including whether the information will have practical utility;

(2) The accuracy of the agency's estimate of the burden of the proposed collection of information;

(3) Ways to enhance the quality, utility, and clarity of the information to be collected; and

(4) Ways to minimize the burden of the collection of information on those who are to respond; including through the use of appropriate automated collection techniques or other forms of information technology, *e.g.,* permitting electronic submission of responses.

HUD encourages interested parties to submit comment in response to these questions.

Authority: Section 3507 of the Paperwork Reduction Act of 1995, 44 U.S.C. Chapter 35.

Dated: September 20, 2019.

Colette Pollard,

Department Paperwork Reduction Act Officer, Office of the Chief Information Officer.

[FR Doc. 2019–21214 Filed 9–27–19; 8:45 am]

BILLING CODE 4210–67–P

DEPARTMENT OF THE INTERIOR

National Park Service

[NPS–WASO–NRNHL–DTS#–28932; PPWOCRADI0, PCU00RP14.R50000]

National Register of Historic Places; Notification of Pending Nominations and Related Actions

AGENCY: National Park Service, Interior.

ACTION: Notice.

SUMMARY: The National Park Service is soliciting comments on the significance of properties nominated before September 14, 2019, for listing or related actions in the National Register of Historic Places.

DATES: Comments should be submitted by October 15, 2019.

ADDRESSES: Comments may be sent via U.S. Postal Service and all other carriers to the National Register of Historic Places, National Park Service, 1849 C St. NW, MS 7228, Washington, DC 20240.

SUPPLEMENTARY INFORMATION: The properties listed in this notice are being considered for listing or related actions in the National Register of Historic Places. Nominations for their consideration were received by the National Park Service before September 14, 2019. Pursuant to Section 60.13 of 36 CFR part 60, written comments are being accepted concerning the significance of the nominated properties under the National Register criteria for evaluation.

Before including your address, phone number, email address, or other personal identifying information in your comment, you should be aware that your entire comment—including your personal identifying information—may be made publicly available at any time. While you can ask us in your comment to withhold your personal identifying information from public review, we cannot guarantee that we will be able to do so.

Nominations submitted by State Historic Preservation Officers:

CONNECTICUT

Fairfield County

Waveny. Roughly bounded by Lapham, Old Stamford & Farm Rds. and Merritt Pkwy.; New Canaan, SG100004543

Middlesex County

Middle Haddam School, 12 Schoolhouse Ln., East Hampton, SG100004545

New Haven County

Short Beach Historic District, Roughly bounded by Shore Dr., Beckett & Clarke Aves., Bungalow & Little Bay Lanes, Court, Pentecost and Bristol Sts., Branford, SG100004544

IOWA

Black Hawk County

Wild Historic District, 423, 501 & 509 W 1st St., Cedar Falls, SG100004546

NORTH DAKOTA

McLean County

Fort Buford Stage Road, Fort Buford Stage Rd., Washburn, SG100004540

Mountrail County

Wabek Consolidated School, 3825 64th Ave. NW, Plaza, SG100004541

OHIO

Franklin County

Winders Motor Sales Company, 182 E Long St., Columbus, SG100004542

Additional documentation has been received for the following resources:

WISCONSIN

Iowa County

Mineral Point Historic District, Roughly bounded by Ross, Shake Rag, 9th, and Bend Sts., Mineral Point, AD71000037

La Crosse County

LaCrosse Commercial Historic District, Roughly bounded by Jay St., Second St. S, State St. and Fifth Ave. S, LaCrosse, AD94001064

Rock County

West Milwaukee Street Historic District, Roughly bounded by Wall, River, Court, and Academy Sts., Janesville, AD90000790

Nomination submitted by Federal Preservation Officer:

The State Historic Preservation Officer reviewed the following nomination and responded to the Federal Preservation Officer within 45 days of receipt of the nomination and supports listing the property in the National Register of Historic Places.

OKLAHOMA

Comanche County

Holy City of the Wichitas Historic District, 62 Holy City Rd., Medicine Park vicinity, SG100004547

Authority: Section 60.13 of 36 CFR part 60

Dated: September 17, 2019.

Julie H. Ernstein, Ph.D., RPA

Supervisory Archeologist, National Register of Historic Places/National Historic Landmarks Program.

[FR Doc. 2019–21143 Filed 9–27–19; 8:45 am]

BILLING CODE 4312–52–P

DEPARTMENT OF THE INTERIOR

Bureau of Reclamation

[DOI–2019–0004; RR83570000, 190R5065C6, RX.59389832.1009676]

Privacy Act of 1974; System of Records

AGENCY: Bureau of Reclamation, Interior.

ACTION: Notice of a modified system of records.

SUMMARY: Pursuant to the provisions of the Privacy Act of 1974, as amended, the Department of the Interior proposes to consolidate ten existing Bureau of Reclamation Privacy Act systems of records related to land and realty management files into the modified and retitled Bureau of Reclamation system of records, ''INTERIOR/Reclamation-14, Land and Realty Program.'' This system of records administers the Bureau of Reclamation inventory of all land, facilities, and waterbodies under Reclamation's jurisdiction. The Bureau of Reclamation is proposing to add new routine uses, modify existing routine uses to provide clarification, and update all sections of the notice to reflect the expanded scope of the modified system. This modified system will be included in the Department of the Interior's inventory of record systems.

DATES: This modified system will be effective upon publication. New or modified routine uses will be effective October 30, 2019. Submit comments on or before October 30, 2019.

ADDRESSES: You may send comments identified by docket number [DOI–2019–0004] by any of the following methods:

- *Federal e-Rulemaking Portal: http://www.regulations.gov.* Follow the instructions for sending comments.
- *Email: DOI_Privacy@ios.doi.gov.* Include docket number [DOI–2019–0004] in the subject line of the message.

• *Mail:* Teri Barnett, Departmental Privacy Officer, U.S. Department of the Interior, 1849 C Street NW, Room 7112, Washington, DC 20240.

• *Hand Delivery/Courier:* Teri Barnett, Departmental Privacy Officer, U.S. Department of the Interior, 1849 C Street NW, Room 7112, Washington, DC 20240.

Instructions: All submissions received must include the agency name and docket number. All comments received will be posted without change to *http://www.regulations.gov,* including any personal information provided.

Docket: For access to the docket to read background documents or comments received, go to *http://www.regulations.gov.*

FOR FURTHER INFORMATION CONTACT: Regina Magno, Associate Privacy Officer, Bureau of Reclamation, P.O. Box 25007, Denver, CO 80225, email at *privacy@usbr.gov* or by telephone at (303) 445–3326.

SUPPLEMENTARY INFORMATION:

I. Background

The Department of the Interior (DOI), Bureau of Reclamation (Reclamation) manages a land and realty program that includes records maintained on individuals covered by ten systems of records notices:

(1) INTERIOR/WBR–14, Land Exchange;

(2) INTERIOR/WBR–15, Land Settlement Entries;

(3) INTERIOR/WBR–17, Lands—Leases, Sales, Rentals, and Transfers;

(4) INTERIOR/WBR–19, Mineral Location Entries;

(5) INTERIOR/WBR–22, Oil and Gas Applications;

(6) INTERIOR/WBR–28, Real Property and Right-of-Way Acquisitions;

(7) INTERIOR/WBR–29, Right-of-Way Applications;

(8) INTERIOR/WBR–32, Special Use Applications, Licenses, and Permits;

(9) INTERIOR/WBR–41, Permits; and

(10) INTERIOR/WBR–43, Real Estate Comparable Sales Data Storage.

During a review of these notices, Reclamation determined that these systems contained duplicative content and were managed by one system manager in the land and realty program. In an effort to streamline land and realty program functions, improve consistency, eliminate duplicative content and promote transparency, Reclamation is proposing to consolidate the ten systems of records into the INTERIOR/WBR–14, Land Exchange, system and change the title to ''INTERIOR/Reclamation-14, Land and Realty Program'' to reflect the purpose and scope of the modified system. This modified system will help Reclamation manage land and realty program activities and maintain an inventory of all land, facilities, and waterbodies under Reclamation's jurisdiction. The system of records will include the following land and realty actions: use authorization management; land settlement records; sales; transfers; disposals; mineral location entries, mining claims; oil and gas applications; real property and right-of-way acquisitions; real property interest applications; and status of land interests held for project purposes. The ten Reclamation system of records notices listed above will remain in effect until the proposed routine uses outlined in this notice become effective. Reclamation will subsequently rescind the other nine notices.

This notice reorganizes the sections and updates section titles in accordance with the Office of Management and Budget (OMB) Circular A–108, ''Federal Agency Responsibilities for Review, Reporting, and Publication under the Privacy Act.'' Additionally, Reclamation is modifying all existing routine uses to provide clarity and transparency. Routine use A was modified to further clarify disclosures to the Department of Justice or other Federal agencies when necessary in relation to litigation or judicial proceedings. Routine uses B, D, and E have been modified to provide additional clarification on external organizations and circumstances where disclosures are compatible with the purpose of the system or are proper and necessary to administer an internal program to manage a thorough inventory of all land, facilities, and waterbodies under Reclamation's jurisdiction.

Modified routine use J and proposed routine use K allow Reclamation to share information with appropriate Federal agencies or entities when reasonably necessary to respond to a breach of personally identifiable information and to prevent, minimize, or remedy the risk of harm to individuals or the Federal Government, or assist an agency in locating individuals affected by a breach in accordance with OMB Memorandum M–17–12, ''Preparing for and Responding to a Breach of Personally Identifiable Information.''

Proposed routine uses C, F, G, H, I, and L through R facilitate sharing of information with agencies and organizations to ensure the efficient management of all land, facilities, and waterbodies under Reclamation's jurisdiction, promote the integrity of the records in the system, or carry out a statutory responsibility of Reclamation or the Federal Government. Proposed routine use C facilitates sharing of information with the Executive Office of the President to resolve issues concerning individual's records. Routine use F allows Reclamation to share information with agencies when relevant for hiring and retention, or issuance of security clearance, license, contract, grant or benefit. Routine use G allows Reclamation to share information with the National Archives and Records Administration (NARA) to conduct records management inspections. Routine use H allows Reclamation to share information with external entities, such as state, territorial and local governments, and tribal organizations needed in response to court orders and/or for discovery purposes related to litigation. Routine use I allows Reclamation to share information with an expert, consultant, grantee, or contractor (including employees of the contractor) of DOI that performs services requiring access to these records on DOI's behalf to carry out the purposes of the system. Routine use L allows Reclamation to share information with the OMB during the coordination and clearance process in connection with legislative affairs. Routine use M allows Reclamation to share information with the Department of the Treasury to recover debts owed to the United States. Routine use N allows Reclamation to share information with the news media and the public if there is a legitimate public interest in the disclosure of the information. Routine use O allows Reclamation to share information with a Federal agency, state, or local government to transfer administration of the land for transmission of power, recreation, fish and wildlife activities, and other purposes as required. Routine use P allows Reclamation to share information with local county governments to transmit deeds and record ownership data. Routine use Q allows Reclamation to share information with appropriate irrigation districts to furnish a copy of a deed in order to advise of an available right-of-way for operating the irrigation system. Routine use R allows Reclamation to share information with DOJ in order to obtain a title opinion.

II. Privacy Act

The Privacy Act of 1974, as amended, embodies fair information practice principles in a statutory framework governing the means by which Federal agencies collect, maintain, use, and disseminate individuals' personal information. The Privacy Act applies to records about individuals that are

maintained in a ''system of records.'' A ''system of records'' is a group of any records under the control of an agency for which information is retrieved by the name of an individual or by some identifying number, symbol, or other identifying particular assigned to the individual. The Privacy Act defines an individual as a United States citizen or lawful permanent resident. Individuals may request access to their own records that are maintained in a system of records in the possession or under the control of DOI by complying with DOI Privacy Act regulations at 43 CFR part 2, subpart K, and following the procedures outlined in the Records Access, Contesting Record, and Notification Procedures sections of this notice.

The Privacy Act requires each agency to publish in the **Federal Register** a description denoting the existence and character of each system of records that the agency maintains and the routine uses of each system. The revised INTERIOR/Reclamation-14, Land and Realty Program, system of records notice is published in its entirety below. In accordance with 5 U.S.C. 552a(r), DOI has provided a report of this system of records to OMB and Congress.

III. Public Participation

You should be aware your entire comment including your personal identifying information, such as your address, phone number, email address, or any other personal identifying information in your comment, may be made publicly available at any time. While you may request to withhold your personal identifying information from public review, we cannot guarantee we will be able to do so.

SYSTEM NAME AND NUMBER:

INTERIOR/Reclamation-14, Land and Realty Program.

SECURITY CLASSIFICATION:

Unclassified.

SYSTEM LOCATION:

Bureau of Reclamation records in this system are maintained at:

(1) Office of Policy and Administration, Asset Management Division, P. O. Box 25007, Denver Federal Center, Denver, CO 80225;

(2) Pacific Northwest Regional Office, 1150 North Curtis Road, Suite 100, Boise, ID 83706;

(3) Mid-Pacific Regional Office, Federal Office Building, 2800 Cottage Way, Sacramento, CA 95825;

(4) Lower Colorado Regional Office, 500 Fir Street, Boulder City, NV 89005;

(5) Upper Colorado Regional Office, 125 South State Street, Room 8100, Salt Lake City, UT 84138;

(6) Great Plains Regional Office, 2021 4th Avenue North, Billings, MT 59101; and

(7) Area and Field offices located throughout the 17 western United States. Reclamation's Area and Field offices can be found at *www.usbr.gov.*

SYSTEM MANAGER(S):

Manager, Asset Management Division, Office of Policy and Administration, Bureau of Reclamation, P. O. Box 25007, Denver, CO 80225.

AUTHORITY FOR MAINTENANCE OF THE SYSTEM:

The Reclamation Act of 1902, (43 U.S.C. 391 *et seq.*), as amended and supplemented; the Reclamation Project Act of 1939, (43 U.S.C. 485), as amended and supplemented; the Mineral Leasing Act of Feb. 25, 1920, as amended, 30 U.S.C. 181 *et seq.;* 43 CFR part 429, Use of Bureau of Reclamation Land, Facilities, and Waterbodies; 44 U.S.C. 3101; An Act to Authorize Certain Desert-Land Claimants Who Entered the Military or Naval Service of the United States During the War with Germany to Make Final Proof of Their Entries, 41 Stat. 1201 (Mar. 1, 1921), as amended by 42 Stat. 348 (Dec. 15, 1921), and as further amended by 42 Stat. 492 (Apr. 7, 1922); the Fact Finders Act of Dec. 5, 1921, Section 4 (43 Stat. 702); Exchange of Unpatented Entries, 43 U.S.C. 423c (May 26, 1926, c. 383, Section 44, 44 Stat. 648); Lands Capable of Irrigation Works, 43 U.S.C. 617h; the Farm Unit Exchange Act of Aug. 13, 1953, 43 U.S.C. 451 *et seq.* (67 Stat. 566); the Reappraisal of Unsold Town Lots Act of Jun. 11, 1910, 43 U.S.C. 564 (36 Stat. 465); the Sale of Surplus Acquired Lands Act of Feb. 2, 1911, 43 U.S.C. 374 (36 Stat. 895); the Sale of Surplus Improved Public Lands Act of May 20, 1920, 43 U.S.C. 375 (41 Stat. 605); the Sale of Unproductive Public Land Act of May 16, 1930, 43 U.S.C. 424–424c (46 Stat. 367); the Taylor Grazing Act of June 28, 1934 (48 Stat. 1269, as amended; 43 U.S.C. 315 *et seq.*); the Columbia Basin Project Act of Mar. 10, 1943, Section 4 (57 Stat. 14); the Gila Project Act of Jul. 30, 1947 (61 Stat. 377); the Vacation of Withdrawals of Public lands Containing Minerals Act of Apr. 23, 1932 (47 Stat. 136); 43 U.S.C. 371, *et seq.;* the Uniform Relocation Assistance and Real Property Acquisition Policies Act of 1970, 42 U.S.C. 4651 *et seq.;* and the Rights of Way Reserved to United States for Canals and Ditches Act of Aug. 30, 1890 (26 Stat. 391), presently found in 43 U.S.C. 321.

PURPOSE(S) OF THE SYSTEM:

This system helps Reclamation manage an inventory of all land, facilities, and waterbodies within its jurisdiction, and administer land and realty actions, such as use authorization management, land settlement records, sales, transfers, disposals, mineral location entries, mining claims, oil and gas applications, real property and right-of-way acquisitions, real property interest applications, and status of land interests held for project purposes.

CATEGORIES OF INDIVIDUALS COVERED BY THE SYSTEM:

Individuals covered by this system include members of the public, applicants for the land and realty program, individual landowners, county recorders, appraisers, officials from title companies, and officials of Federal and non-Federal entities, including corporate and commercial stakeholders, whose records are maintained in this system. Note: This system contains records concerning corporations and other business entities, which are not subject to the Privacy Act. However, records pertaining to individuals acting on behalf of corporations and other business entities may reflect personal information that may be maintained in this system of records.

CATEGORIES OF RECORDS IN THE SYSTEM:

The system contains records related to the use of Reclamation land, facilities, or waterbodies. Records include land and realty actions; use authorization management; land settlement records; sales; transfers; disposals; mineral location entries; mining claims; oil and gas applications; real property and right-of-way acquisitions; real property interest applications; and status of land interests held for project purposes. Records also include Reclamation contracts involving land sales and purchases, leases, rentals, contracts, exchanges, and transferred ownership within Federal Reclamation projects; Land Office Notices, which are notices of compliance with the Homestead Act that verifies the homesteader/applicant has met all program requirements; general exchange of unpatented or private lands that have been determined to be insufficient to support a family; Notice of Availability of advertising land requests, contracts, and land renewals of Reclamation land interest; mining claims under the Mineral Leasing Act of February 25, 1920, as amended, 30 U.S.C. 181 *et seq.;* acquisitions of land or right-of-way information, including correspondence, appraisal reports, land descriptions, releases of prior liens, licenses, permits,

written correspondence giving permission to enter private land, contracts to purchase, landowner and Reclamation agreements, Notice of Exercise of Right-of-Way, payment history, condemnation actions, and other supporting correspondence as it relates to each transaction; Bureau of Land Management right-of-way applicant information on Reclamation land that is a requirement for certain right-of-way actions that need to become part of the legal land record; land exchange actions; and appeals as identified in 43 CFR part 429, Use of Bureau of Reclamation Land, Facilities, and Waterbodies.

These records may contain information such as name; email address; mailing address; work or personal phone number; veteran status; financial information; Social Security number; tax identification number; name of insurance carrier; financial assets to verify whether the individuals have the financial viability of the proposed land and realty actions; applicant's ability to meet program requirements as outlined in Reclamation's authorities; historical documentation related to health information from applicants; and legal parcel, land description which identifies property characteristics, or contract number.

RECORD SOURCE CATEGORIES:

Records in this system are obtained from individual members of the public, applicants, Federal and non-Federal entities including corporate and commercial stakeholders whose records are maintained, individual landowners, county recorders, appraisers, title companies, and from other internal DOI systems as set forth under Reclamation regulations and policies.

ROUTINE USES OF RECORDS MAINTAINED IN THE SYSTEM, INCLUDING CATEGORIES OF USERS AND THE PURPOSES OF SUCH USES:

In addition to those disclosures generally permitted under 5 U.S.C. 552a(b) of the Privacy Act, all or a portion of the records or information contained in this system may be disclosed outside DOI as a routine use pursuant to 5 U.S.C. 552a(b)(3) as follows:

A. To the Department of Justice (DOJ), including Offices of the U.S. Attorneys, or other Federal agency conducting litigation or in proceedings before any court, adjudicative, or administrative body, when it is relevant or necessary to the litigation and one of the following is a party to the litigation or has an interest in such litigation:

(1) DOI or any component of DOI;

(2) Any other Federal agency appearing before the Office of Hearings and Appeals;

(3) Any DOI employee or former employee acting in his or her official capacity;

(4) Any DOI employee or former employee acting in his or her individual capacity when DOI or DOJ has agreed to represent that employee or pay for private representation of the employee; or

(5) The United States Government or any agency thereof, when DOJ determines that DOI is likely to be affected by the proceeding.

B. To a congressional office in response to a written inquiry that an individual covered by the system has made to the office.

C. To the Executive Office of the President in response to an inquiry from that office made at the request of the subject of a record or a third party on that person's behalf, or for a purpose compatible with the reason for which the records are collected or maintained.

D. To any criminal, civil, or regulatory law enforcement authority (whether Federal, state, territorial, local, tribal or foreign) when a record, either alone or in conjunction with other information, indicates a violation or potential violation of law—criminal, civil, or regulatory in nature, and the disclosure is compatible with the purpose for which the records were compiled.

E. To an official of another Federal agency to provide information needed in the performance of official duties related to reconciling or reconstructing data files or to enable that agency to respond to an inquiry by the individual to whom the record pertains.

F. To Federal, state, territorial, local, tribal, or foreign agencies that have requested information relevant or necessary to the hiring, firing or retention of an employee or contractor, or the issuance of a security clearance, license, contract, grant or other benefit, when the disclosure is compatible with the purpose for which the records were compiled.

G. To representatives of the National Archives and Records Administration (NARA) to conduct records management inspections under the authority of 44 U.S.C. 2904 and 2906.

H. To state, territorial and local governments and tribal organizations to provide information needed in response to court order and/or discovery purposes related to litigation, when the disclosure is compatible with the purpose for which the records were compiled.

I. To an expert, consultant, grantee, or contractor (including employees of the contractor) of DOI that performs services requiring access to these records on DOI's behalf to carry out the purposes of the system.

J. To appropriate agencies, entities, and persons when:

(1) DOI suspects or has confirmed that there has been a breach of the system of records;

(2) DOI has determined that as a result of the suspected or confirmed breach there is a risk of harm to individuals, DOI (including its information systems, programs, and operations), the Federal Government, or national security; and

(3) the disclosure made to such agencies, entities, and persons is reasonably necessary to assist in connection with DOI's efforts to respond to the suspected or confirmed breach or to prevent, minimize, or remedy such harm.

K. To another Federal agency or Federal entity, when DOI determines that information from this system of records is reasonably necessary to assist the recipient agency or entity in:

(1) Responding to a suspected or confirmed breach; or

(2) preventing, minimizing, or remedying the risk of harm to individuals, the recipient agency or entity (including its information systems, programs, and operations), the Federal Government, or national security, resulting from a suspected or confirmed breach.

L. To the Office of Management and Budget (OMB) during the coordination and clearance process in connection with legislative affairs as mandated by OMB Circular A–19.

M. To the Department of the Treasury to recover debts owed to the United States.

N. To the news media and the public, with the approval of the Public Affairs Officer in consultation with counsel and the Senior Agency Official for Privacy, where there exists a legitimate public interest in the disclosure of the information, except to the extent it is determined that release of the specific information in the context of a particular case would constitute an unwarranted invasion of personal privacy.

O. To another Federal agency, state, or local government to transfer administration of the land for transmission of power, recreation, fish and wildlife activities, and other purposes as required. Transfer of information is necessary in order to effectively and efficiently facilitate operation and maintenance requirements.

P. To a local county government to transmit deeds in order to record

ownership data. For certain documents, it is required that appropriate land records be recorded in the county courthouse.

Q. To the appropriate irrigation district to furnish a copy of a deed in order to advise of an available right-of-way for operating the irrigation system. Transfer of information is necessary in order to effectively and efficiently facilitate operation and maintenance requirements.

R. To the DOJ for title opinion on land and realty actions by Reclamation. When appropriate, Reclamation will request DOJ to provide a title opinion on certain land and realty actions.

DISCLOSURE TO CONSUMER REPORTING AGENCIES:

Disclosure pursuant to 5 U.S.C. 552a(b)(12). Disclosures may be made from this system to consumer reporting agencies as defined in the Fair Credit Reporting Act (15 U.S.C. 1681a(f)) or the Federal Claims Act of 1966, as amended (31 U.S.C. 3701(a)(3)).

POLICIES AND PRACTICES FOR STORAGE OF RECORDS:

Land and realty program records are managed securely at Reclamation offices. Paper records are contained in file folders stored in locked file cabinets at secured Reclamation facilities. Electronic records are contained in removable drives, computers, email, and electronic databases.

POLICIES AND PRACTICES FOR RETRIEVAL OF RECORDS:

Records are retrieved by the individual's name, legal parcel, land description which identifies property characteristics, or contract number.

POLICIES AND PRACTICES FOR RETENTION AND DISPOSAL OF RECORDS:

Records in this system are currently maintained in accordance with the following Bureau of Reclamation Records Retention Schedule: ENV–8.00 Clean Water Act Management—5 years; LND–3.00 Land Acquisition—Permanent; LND–6.00 Land Management—Permanent; and WTR–4.03 Water Sales/Delivery Contract/Exchange of Water—Permanent. Permanent records are maintained either at the office of record or transferred to the Federal Records Center or NARA when volume warrants.

A new Department Records Schedule (DRS) has been submitted to the NARA and is pending approval. Once NARA approves the DRS the records related to this system, records will be maintained in accordance with the following DRS: 2.1.4.13 Natural and Cultural Resources Environmental Land and National Environmental Policy Act, 10 years; 2.2.3.18 Sustainably Manage Land Use, 25 years; 2.2.3.19 Sustainably Manage Land Use, Recreation and Planning—Management Plans and Reports, permanent; and 2.2.4.23 Sustainably Manage Water, permanent. These record schedules cover transactions on case files documenting correspondence, memorandums, email and other documentation containing contracts, deeds, and other supporting papers documenting the use authorization, sale, delivery, transfer, exchange, and disposal of land or water in which payment is required. This also includes documentation related to settlement and land entries as well as use authorization applications including licenses, and permits issued to Reclamation or by Reclamation. File closures vary and will fall under one of these methods: (1) Files are closed after unconditional sale or release by the Government restrictions (mortgages or other liens), transfer, exchange, or disposal of Reclamation land interest; (2) Files are closed after termination of said transaction or when no longer needed for reference, whichever is earlier; and (3) Some files are closed at the end of each calendar year or when the individual's permit expires or the termination of a contract.

Paper records are disposed of by shredding or pulping, and records contained on electronic media format are degaussed or erased in accordance with the applicable records retention schedule, 384 Department Manual 1, and NARA guidelines.

ADMINISTRATIVE, TECHNICAL, AND PHYSICAL SAFEGUARDS:

The records contained in this system are safeguarded in accordance with 43 CFR 2.226 and other applicable security rules and policies. Records are accessible only by authorized DOI employees, and other Federal Government agencies and contractors who have contractual agreements with Reclamation to conduct activities related to land and realty. During normal hours of operation, paper records are secured in locked file cabinets under the control of authorized personnel. Computers and servers on which electronic records are stored are located in secured DOI and/or contractor facilities with physical, technical, and administrative levels of security such as access codes, security codes, and security guards, to prevent unauthorized access to the DOI network and information assets. Access to DOI networks and data requires a valid username and password, and is limited to DOI personnel and/or contractors who have a need to know of the information for the performance of their official duties. Access to contractor's networks and data requires restricted access limited to authorized personnel. Computerized records systems follow the National Institute of Standards and Technology privacy and security standards as developed to comply with the Privacy Act of 1974 as amended, 5 U.S.C. 552a; the Paperwork Reduction Act of 1995, Public Law 104–13; the Federal Information Security Modernization Act of 2014, Public Law 113–283, as codified at 44 U.S.C. 3551, *et seq.;* and the Federal Information Processing Standard 199, Standards for Security Categorization of Federal Information and Information Systems. Security controls include user identification, passwords, database permissions, encryption, firewalls, audit logs, and network system security monitoring, and software controls. System administrators and authorized personnel are trained and required to follow established internal security protocols and must complete all security, privacy, and records management training and sign the DOI Rules of Behavior.

RECORD ACCESS PROCEDURES:

An individual requesting records on himself or herself should send a signed, written inquiry to the System Manager identified above. The request must include the specific office that maintains the record to facilitate location of the applicable records. The request envelope and letter should both be clearly marked ''PRIVACY ACT REQUEST FOR ACCESS.'' A request for access must meet the requirements of 43 CFR 2.238.

CONTESTING RECORD PROCEDURES:

An individual requesting corrections or the removal of material from his or her records should send a signed, written request to the System Manager as identified above. The request must include the specific office that maintains the record to facilitate location of the applicable records. A request for corrections or removal must meet the requirements of 43 CFR 2.246.

NOTIFICATION PROCEDURES:

An individual requesting notification of the existence of records on himself or herself should send a signed, written inquiry to the System Manager as identified above. The request must include the specific office that maintains the record to facilitate location of the applicable records. The request envelope and letter should both be clearly marked ''PRIVACY ACT

INQUIRY.'' A request for notification must meet the requirements of 43 CFR 2.235.

EXEMPTIONS PROMULGATED FOR THE SYSTEM:

None.

HISTORY:

- INTERIOR/WBR–14, Land Exchange, 64 FR 29876 (June 3, 1999); modification published 73 FR 20949 (April 17, 2008).
- INTERIOR/WBR–15, Land Settlement Entries, 64 FR 29876 (June 3, 1999); modification published 73 FR 20949 (April 17, 2008).
- INTERIOR/WBR–17, Lands—Leases, Sales, Rentals, and Transfers 64 FR 29876 (June 3, 1999); modification published 73 FR 20950 (April 17, 2008).
- INTERIOR/WBR–19, Mineral Location Entries, 64 FR 29876 (June 3, 1999); modification published 73 FR 20949 (April 17, 2008).
- INTERIOR/WBR–22, Oil and Gas Applications, 64 FR 29876 (June 3, 1999); modification published 73 FR 20949 (April 17, 2008).
- INTERIOR/WBR–28, Real Property and Right of Way Acquisition 64 FR 29876 (June 3, 1999); modification published 73 FR 20949 (April 17, 2008).
- INTERIOR/WBR–29, Right of Way Applications, 64 FR 29876 (June 3, 1999); modification published 73 FR 20949 (April 17, 2008).
- INTERIOR/WBR–32, Special Use Applications, Licenses, and Permits, 64 FR 29876 (June 3, 1999); modification published 73 FR 20949 (April 17, 2008).
- INTERIOR/WBR–41, Permits, 64 FR 29876 (June 3, 1999); modification published 73 FR 20949 (April 17, 2008).
- INTERIOR/WBR–43, Real Estate Comparable Sales Data Storage, 64 FR 29876 (June 3, 1999); modification published 73 FR 20949 (April 17, 2008).

Teri Barnett,

Departmental Privacy Officer, Department of the Interior.

[FR Doc. 2019–21072 Filed 9–27–19; 8:45 am]

BILLING CODE 4332–90–P

INTERNATIONAL TRADE COMMISSION

[Investigation No. 731–TA–1143 (Second Review)]

Small Diameter Graphite Electrodes From China; Scheduling of a Full Five-Year Review

AGENCY: United States International Trade Commission.

ACTION: Notice.

SUMMARY: The Commission hereby gives notice of the scheduling of a full review pursuant to the Tariff Act of 1930 (''the Act'') to determine whether revocation of the antidumping duty order on small diameter graphite electrodes from China would be likely to lead to continuation or recurrence of material injury within a reasonably foreseeable time.

DATES: September 23, 2019.

FOR FURTHER INFORMATION CONTACT: Nitin Joshi (202–708–1669), Office of Investigations, U.S. International Trade Commission, 500 E Street SW, Washington, DC 20436. Hearing-impaired persons can obtain information on this matter by contacting the Commission's TDD terminal on 202–205–1810. Persons with mobility impairments who will need special assistance in gaining access to the Commission should contact the Office of the Secretary at 202–205–2000. General information concerning the Commission may also be obtained by accessing its internet server (*https://www.usitc.gov*). The public record for this review may be viewed on the Commission's electronic docket (EDIS) at *https://edis.usitc.gov.*

SUPPLEMENTARY INFORMATION:

Background.—On August 5, 2019, the Commission determined that responses to its notice of institution of the subject five-year review were such that a full review should proceed (84 FR 43615, August 21, 2019); accordingly, a full review is being scheduled pursuant to section 751(c)(5) of the Tariff Act of 1930 (19 U.S.C. 1675(c)(5)). A record of the Commissioners' votes, the Commission's statement on adequacy, and any individual Commissioner's statements are available from the Office of the Secretary and at the Commission's website.

Participation in the review and public service list.—Persons, including industrial users of the subject merchandise and, if the merchandise is sold at the retail level, representative consumer organizations, wishing to participate in this review as parties must file an entry of appearance with the Secretary to the Commission, as provided in section 201.11 of the Commission's rules, by 45 days after publication of this notice. A party that filed a notice of appearance following publication of the Commission's notice of institution of the review need not file an additional notice of appearance. The Secretary will maintain a public service list containing the names and addresses of all persons, or their representatives, who are parties to the review.

For further information concerning the conduct of this review and rules of general application, consult the Commission's Rules of Practice and Procedure, part 201, subparts A and B (19 CFR part 201), and part 207, subparts A, D, E, and F (19 CFR part 207).

Limited disclosure of business proprietary information (BPI) under an administrative protective order (APO) and BPI service list.—Pursuant to section 207.7(a) of the Commission's rules, the Secretary will make BPI gathered in this review available to authorized applicants under the APO issued in the review, provided that the application is made by 45 days after publication of this notice. Authorized applicants must represent interested parties, as defined by 19 U.S.C. 1677(9), who are parties to the review. A party granted access to BPI following publication of the Commission's notice of institution of the review need not reapply for such access. A separate service list will be maintained by the Secretary for those parties authorized to receive BPI under the APO.

Staff report.—The prehearing staff report in the review will be placed in the nonpublic record on January 7, 2020, and a public version will be issued thereafter, pursuant to section 207.64 of the Commission's rules.

Hearing.—The Commission will hold a hearing in connection with the review beginning at 9:30 a.m. on Thursday, January 23, 2020, at the U.S. International Trade Commission Building. Requests to appear at the hearing should be filed in writing with the Secretary to the Commission on or before January 15, 2020. A nonparty who has testimony that may aid the Commission's deliberations may request permission to present a short statement at the hearing. All parties and nonparties desiring to appear at the hearing and make oral presentations should participate in a prehearing conference to be held on January 22, 2020, at the U.S. International Trade Commission Building, if deemed necessary. Oral testimony and written materials to be submitted at the public hearing are governed by sections 201.6(b)(2), 201.13(f), 207.24, and 207.66 of the Commission's rules. Parties must submit any request to present a portion of their hearing testimony *in camera* no later than 7 business days prior to the date of the hearing.

Written submissions.—Each party to the review may submit a prehearing brief to the Commission. Prehearing briefs must conform with the provisions of section 207.65 of the Commission's rules; the deadline for filing is January 14, 2020. Parties may also file written testimony in connection with their presentation at the hearing, as provided

in section 207.24 of the Commission's rules, and posthearing briefs, which must conform with the provisions of section 207.67 of the Commission's rules. The deadline for filing posthearing briefs is January 31, 2020. In addition, any person who has not entered an appearance as a party to the review may submit a written statement of information pertinent to the subject of the review on or before January 31, 2020. On February 26, 2020, the Commission will make available to parties all information on which they have not had an opportunity to comment. Parties may submit final comments on this information on or before February 28, 2020, but such final comments must not contain new factual information and must otherwise comply with section 207.68 of the Commission's rules. All written submissions must conform with the provisions of section 201.8 of the Commission's rules; any submissions that contain BPI must also conform with the requirements of sections 201.6, 207.3, and 207.7 of the Commission's rules. The Commission's *Handbook on Filing Procedures,* available on the Commission's website at *https://www.usitc.gov/documents/handbook_on_filing_procedures.pdf,* elaborates upon the Commission's procedures with respect to filings.

Additional written submissions to the Commission, including requests pursuant to section 201.12 of the Commission's rules, shall not be accepted unless good cause is shown for accepting such submissions, or unless the submission is pursuant to a specific request by a Commissioner or Commission staff.

In accordance with sections 201.16(c) and 207.3 of the Commission's rules, each document filed by a party to the review must be served on all other parties to the review (as identified by either the public or BPI service list), and a certificate of service must be timely filed. The Secretary will not accept a document for filing without a certificate of service.

Authority: This review is being conducted under authority of title VII of the Tariff Act of 1930; this notice is published pursuant to section 207.62 of the Commission's rules.

By order of the Commission.

Issued: September 24, 2019.

Lisa Barton,

Secretary to the Commission.

[FR Doc. 2019–21065 Filed 9–27–19; 8:45 am]

BILLING CODE 7020–02–P

DEPARTMENT OF JUSTICE

Federal Bureau of Investigation

Meeting of the Compact Council for the National Crime Prevention and Privacy Compact

AGENCY: Federal Bureau of Investigation, Department of Justice.

ACTION: Meeting notice.

SUMMARY: The purpose of this notice is to announce a meeting of the National Crime Prevention and Privacy Compact Council (Council) created by the National Crime Prevention and Privacy Compact Act of 1998 (Compact).

DATES: The Council will meet in open session from 9 a.m. until 5 p.m. on November 06, 2019 and 9 a.m. until 12:00 p.m. on November 7, 2019.

ADDRESSES: The meeting will take place at the InterContinental, Kansas City at the Plaza, 401 Ward Parkway, Kansas City, Missouri, telephone 816–756–1500.

FOR FURTHER INFORMATION CONTACT: Inquiries may be addressed to Mrs. Chasity S. Anderson, FBI Compact Officer, Module D3, 1000 Custer Hollow Road, Clarksburg, West Virginia 26306, telephone 304–625–2803, facsimile 304–625–2868.

SUPPLEMENTARY INFORMATION: Thus far, the Federal Government and 34 states are parties to the Compact which governs the exchange of criminal history records for licensing, employment, and similar purposes. The Compact also provides a legal framework for the establishment of a cooperative federal-state system to exchange such records.

The United States Attorney General appointed 15 persons from state and federal agencies to serve on the Council. The Council will prescribe system rules and procedures for the effective and proper operation of the Interstate Identification Index system for noncriminal justice purposes.

Matters for discussion are expected to include:

(1) Recommendations from the National Fingerprint File Qualification Requirements Focus Group
(2) Mobile Device Management Requirements
(3) Consolidation Notification of FBI Universal Control Numbers (UCN) to Federal Agencies

The meeting will be open to the public on a first-come, first-seated basis. Any member of the public wishing to file a written statement with the Council or wishing to address this session of the Council should notify the Federal Bureau of Investigation (FBI) Compact Officer, Mrs. Chasity S. Anderson at 304–625–2803, at least 24 hours prior to the start of the session. The notification should contain the individual's name and corporate designation, consumer affiliation, or government designation, along with a short statement describing the topic to be addressed and the time needed for the presentation. Individuals will ordinarily be allowed up to 15 minutes to present a topic.

Dated: September 23, 2019.

Chasity S. Anderson,

FBI Compact Officer, Criminal Justice Information Services Division, Federal Bureau of Investigation.

[FR Doc. 2019–21175 Filed 9–27–19; 8:45 am]

BILLING CODE 4410–02–P

DEPARTMENT OF JUSTICE

[OMB Number 1123–0013]

Agency Information Collection Activities; Proposed eCollection eComments Requested; United States Victims of State Sponsored Terrorism Fund Application Form

AGENCY: Criminal Division, Department of Justice.

ACTION: 30-Day notice.

SUMMARY: The U.S. Department of Justice, Criminal Division, United States Victims of State Sponsored Terrorism Fund, will be submitting the following information collection request to the Office of Management and Budget (OMB) for review and approval in accordance with the Paperwork Reduction Act of 1995. This proposed information collection was previously published in the **Federal Register**.

DATES: Comments are encouraged and will be accepted for an additional days until October 30, 2019.

FOR FURTHER INFORMATION CONTACT: Written comments and/or suggestions regarding the items contained in this notice, especially the estimated public burden and associated response time, should be directed to either the Special Master, United States Victims of State Sponsored Terrorism Fund, or the Chief, Program Management and Training Unit, Money Laundering and Asset Recovery Section, Criminal Division, U.S. Department of Justice, 950 Pennsylvania Avenue NW, Washington, DC 20530–0001, telephone (202) 353–2046. Written comments and/or suggestions can also be sent to the Office of Management and Budget, Office of Information and Regulatory Affairs, Attention Department of Justice Desk Officer, Washington, DC 20503, or

sent to *OIRA_submissions@omb.eop.gov.*

SUPPLEMENTARY INFORMATION: Written comments and suggestions from the public and affected agencies concerning the proposed collection of information are encouraged. Your comments should address one or more of the following four points:

1. Evaluate whether the proposed collection of information is necessary for the proper performance of the functions of the agency, including whether the information will have practical utility;
2. Evaluate the accuracy of the agency's estimate of the burden of the proposed collection of information, including the validity of the methodology and assumptions used;
3. Evaluate whether and if so how the quality, utility, and clarity of the information to be collected can be enhanced; and
4. Minimize the burden of the collection of information on those who are to respond, including through the use of appropriate automated, electronic, mechanical, or other technological collection techniques or other forms of information technology, *e.g.,* permitting electronic submission of responses.

Overview of This Information Collection

1. *Type of Information Collection:* Extension of a currently approved collection.
2. *The Title of the Form/Collection:* Application Form for the U.S. Victims of State Sponsored Terrorism Fund.
3. *The agency form number:* N/A. The U.S. Victims of State Sponsored Terrorism Fund, U.S. Department of Justice, Criminal Division.
4. *Affected public who will be asked or required to respond, as well as a brief abstract:*

Primary: Individuals or households.

Abstract: The U.S. Victims of State Sponsored Terrorism Fund (the ''USVSST Fund'') was established to provide compensation to certain individuals who were injured as a result of acts of international terrorism by a state sponsor of terrorism. Under the Justice for United States Victims of State Sponsored Terrorism Act (''Act''), 34 U.S.C. 20144(c), an eligible claimant is (1) a U.S. person, as defined in 34 U.S.C. 20144(j)(8), with a final judgment issued by a U.S. district court under state or federal law against a state sponsor of terrorism and arising from an act of international terrorism, for which the foreign state was found not immune under provisions of the Foreign Sovereign Immunities Act, codified at 28 U.S.C. 1605A or 1605(a)(7) (as such section was in effect on January 27, 2008); (2) a U.S. person, as defined in 34 U.S.C. 20144(j)(8), who was taken and held hostage from the United States Embassy in Tehran, Iran, during the period beginning November 4, 1979, and ending January 20, 1981, or the spouse and child of that U.S. person at that time, and who is also identified as a member of the proposed class in case number 1:00–CV–03110 (EGS) of the United States District Court for the District of Columbia; or (3) the personal representative of a deceased individual in either of those two categories.

The information collected from the USVSST Fund's Application Form will be used to determine whether applicants are eligible for compensation from the USVSST Fund, and if so, the amount of compensation to be awarded. The Application Form consists of parts related to eligibility and compensation. The eligibility parts seek the information required by the Act to determine whether a claimant is eligible for payment from the USVSST Fund, including information related to participation in federal lawsuits against a state sponsor of terrorism under the Foreign Sovereign Immunities Act. The compensation parts seek the information required by the Justice for United States Victims of State Sponsored Terrorism Act to determine the amount of compensation for which the claimant is eligible. Specifically, the compensation parts seek information regarding any payments from sources other than the USVSST Fund that the claimant received, is entitled to receive, or is scheduled to receive, as a result of the act of international terrorism by a state sponsor of terrorism and the amount of compensatory damages awarded to the claimant in a final judgment. The Application Form was revised with minor formatting changes. There are no substantive changes in the revised Application Form, which contains the same information regarding eligibility and compensation.

The USVSST Fund may require an eligible claimant to supplement his or her application by submitting additional forms. These additional supplementary forms include information related to: (1) An acknowledgment and certification by applicants and their attorneys regarding the statutory provision on the amount of attorneys' fees; (2) an authorization for the USVSST Fund to communicate with individuals identified by an applicant regarding his or her claim; (3) a proposed distribution plan and corresponding consent to the proposed distribution plan in claims filed by a personal representative of a deceased individual; (4) a Notice of Filing Claim for use by those applicants filing claims on behalf of deceased individuals; (5) a claimant's decision to change an attorney or representative; (6) a hearing request upon receipt of a decision denying the claim in whole or in part; and (7) electronic payment information.

5. *An estimate of the total number of respondents and the amount of time estimated for an average respondent to respond:* It is estimated that 700 respondents may complete the Application Form. It is estimated that respondents will complete the paper form or the electronic form in an average of 1.5 hours.

6. *An estimate of the total public burden (in hours) associated with the collection:* The estimated public burden associated with this collection is 1,050 hours.

If additional information is required contact: Melody Braswell, Department Clearance Officer, United States Department of Justice, Justice Management Division, Policy and Planning Staff, Two Constitution Square, 145 N Street NE, 3E.405A, Washington, DC 20530.

Dated: September 24, 2019.

Melody Braswell,

Department Clearance Officer for PRA, U.S. Department of Justice.

[FR Doc. 2019–21032 Filed 9–27–19; 8:45 am]

BILLING CODE 4410–14–P

DEPARTMENT OF LABOR

Employee Benefits Security Administration

[Exemption Application No. D–11998]

Proposed Exemption From Certain Prohibited Transaction Restrictions Involving UBS Asset Management (Americas) Inc.; UBS Realty Investors LLC; UBS Hedge Fund Solutions LLC; UBS O'Connor LLC; and Certain Future Affiliates in UBS's Asset Management and Global Wealth Management U.S. Divisions (Collectively, the Applicants or the UBS QPAMs) Located in Chicago, Illinois; Hartford, Connecticut; New York, New York; and Chicago, Illinois, Respectively

AGENCY: Employee Benefits Security Administration, Labor.

ACTION: Notice of proposed exemption.

SUMMARY: This document provides notice of the pendency before the Department of Labor (the Department) of

a proposed individual exemption from certain of the prohibited transaction restrictions of the Employee Retirement Income Security Act of 1974 (ERISA or the Act) and/or the Internal Revenue Code of 1986 (the Code). If this proposed exemption is granted, certain entities with specified relationships to UBS AG (UBS), UBS Securities Japan and UBS France will not be precluded from relying on the exemptive relief provided by Prohibited Transaction Class Exemption 84–14.

DATES: If granted, this proposed exemption will be in effect for five years beginning on February 20, 2020 and ending on February 20, 2025.

Written comments and requests for a public hearing on the proposed exemption should be submitted to the Department by November 14, 2019.

ADDRESSES: All written comments and requests for a hearing (at least three copies) should be sent to the Employee Benefits Security Administration (EBSA), Office of Exemption Determinations, U.S. Department of Labor, 200 Constitution Avenue NW, Suite 400, Washington, DC 20210, Attention: Application No. D–11998 or via private delivery service or courier to the Employee Benefits Security Administration (EBSA), Office of Exemption Determinations, U.S. Department of Labor, 122 C St. NW, Suite 400, Washington, DC 20001. Attention: Application No. D–11998. Interested persons may also submit comments and/or hearing requests to EBSA via email to *e-OED@dol.gov* or by FAX to (202) 693–8474, or online through *http://www.regulations.gov.* Any such comments or requests should be sent by the end of the scheduled comment period. The application for exemption and the comments received will be available for public inspection in the Public Disclosure Room of the Employee Benefits Security Administration, U.S. Department of Labor, Room N–1515, 200 Constitution Avenue NW, Washington, DC 20210. See **SUPPLEMENTARY INFORMATION** below for additional information regarding comments.

FOR FURTHER INFORMATION CONTACT: Brian Mica of the Department at (202) 693–8402. (This is not a toll-free number.)

SUPPLEMENTARY INFORMATION:

Comments: Comments should state the nature of the person's interest in the proposed exemption and the manner in which the person would be adversely affected by the exemption, if granted. Any person who may be adversely affected by an exemption can request a hearing on the exemption. A request for a hearing must state: (1) The name, address, telephone number, and email address of the person making the request; (2) the nature of the person's interest in the exemption and the manner in which the person would be adversely affected by the exemption; and (3) a statement of the issues to be addressed and a general description of the evidence to be presented at the hearing. The Department will grant a request for a hearing made in accordance with the requirements above where a hearing is necessary to fully explore material factual issues identified by the person requesting the hearing. A notice of such hearing shall be published by the Department in the **Federal Register**. The Department may decline to hold a hearing if: (1) The request for the hearing does not meet the requirements above; (2) the only issues identified for exploration at the hearing are matters of law; or (3) the factual issues identified can be fully explored through the submission of evidence in written (including electronic) form.

Warning: All comments received will be included in the public record without change and may be made available online at *http://www.regulations.gov,* including any personal information provided, unless the comment includes information claimed to be confidential or other information whose disclosure is restricted by statute. If you submit a comment, EBSA recommends that you include your name and other contact information in the body of your comment, but DO NOT submit information that you consider to be confidential, or otherwise protected (such as Social Security number or an unlisted phone number) or confidential business information that you do not want publicly disclosed. However, if EBSA cannot read your comment due to technical difficulties and cannot contact you for clarification, EBSA might not be able to consider your comment. Additionally, the *http://www.regulations.gov* website is an ''anonymous access'' system, which means EBSA will not know your identity or contact information unless you provide it in the body of your comment. If you send an email directly to EBSA without going through *http://www.regulations.gov,* your email address will be automatically captured and included as part of the comment that is placed in the public record and made available on the internet.

Background: On February 26, 2019, the Department published Prohibited Transaction Exemption (PTE) 2019–01, which is a one year exemption permitting certain entities with specified relationships to UBS to continue to rely upon the relief provided by PTE 84–14 [1] for a period of one year beginning February 20, 2019, notwithstanding certain criminal convictions, as described herein (the Convictions) and the 2019 French Conviction.[2] The Department granted PTE 2019–01 to protect plans and IRAs that use UBS asset managers, from the costs and expenses that could have arisen if the UBS QPAMs had lost their ability to rely on PTE 84–14 as of the 2019 French Conviction Date, as represented by the Applicants. The temporary nature of PTE 2019–01 allows the Department sufficient time, including a longer comment period for this proposed five-year exemption, to determine whether a longer-term exemption is necessary and appropriate.

The UBS QPAMs request a longer-term individual exemption providing the same relief as was provided in PTE 2019–01. Accordingly, the Department proposes to grant this five-year exemption to protect Covered Plans [3] from certain costs and/or investment losses that may arise to the extent entities with a corporate relationship to UBS, UBS Securities Japan, or UBS France lose their ability to rely on PTE 84–14 as of February 20, 2020.

The proposed exemption would provide relief from certain of the restrictions set forth in sections 406 and 407 of ERISA. It would not, however, provide relief from any other violation of law. Furthermore, the Department cautions that the relief in this proposed exemption would terminate immediately if, among other things, an entity within the UBS corporate structure is convicted of a crime covered by Section I(g) of PTE 84–14 (other than the 2013 Conviction, 2018 Conviction, and the 2019 French Conviction) during the exemption period (as defined in Section II(j)). Although the UBS QPAMs could apply for a new exemption in that

[1] 49 FR 9494, March 13, 1984, as corrected at 50 FR 41430 (October 10, 1985), as amended at 70 FR 49305 (August 23, 2005) and as amended at 75 FR 38837 (July 6, 2010), hereinafter referred to as PTE 84–14 or the QPAM exemption.

[2] PTE 2019–01; 84 FR 6163, February 26, 2019.

[3] A ''Covered Plan'' is a plan subject to Part 4 of Title 1 of ERISA (''ERISA-covered plan'') or a plan subject to section 4975 of the Code (''IRA'') with respect to which a UBS QPAM relies on PTE 84–14, or with respect to which a UBS QPAM (or any UBS affiliate) has expressly represented that the manager qualifies as a QPAM or relies on the QPAM class exemption (PTE 84–14). A Covered Plan does not include an ERISA-covered plan or IRA to the extent the UBS QPAM has expressly disclaimed reliance on QPAM status or PTE 84–14 in entering into its contract, arrangement, or agreement with the ERISA-covered plan or IRA.

circumstance, the Department would not be obligated to grant the exemption. The terms of this exemption have been specifically designed to permit plans to terminate their relationships in an orderly and cost effective fashion in the event of an additional conviction, or the expiration of this exemption without additional relief, or a determination that it is otherwise prudent for a plan to terminate its relationship with an entity covered by the exemption.

To the extent additional clarification is necessary, these persons or entities should contact EBSA's Office of Exemption Determinations, at 202–693–8540.

Summary of Facts and Representations [4]

UBS and the QPAMs

1. UBS AG (UBS) is a Swiss-based global financial services company organized under the laws of Switzerland. UBS has banking divisions and subsidiaries throughout the world, with its United States headquarters located in New York, New York and Stamford, Connecticut. UBS itself does not provide investment management services to client plans that are subject to Part 4 of Title I of ERISA (ERISA plans) or section 4975 of the Code (IRAs), or otherwise exercise discretionary control over ERISA assets. All ERISA assets are managed by U.S. affiliates of UBS.

2. UBS Asset Management (Americas) Inc., UBS Realty Investors LLC, UBS Hedge Fund Solutions LLC, and UBS O'Connor LLC [5] are currently the four UBS affiliates that rely on PTE 84–14. Collectively, these UBS QPAMs have total ERISA assets under management of approximately $11.5 billion as of June 30, 2018, excluding ERISA assets invested in pooled funds that are not plan asset funds.

ERISA and Code Prohibited Transactions and PTE 84–14

3. Section 406 of ERISA and section 4975(c)(1) of the Code proscribe certain ''prohibited transactions'' between plans and related parties with respect to those plans. Under ERISA such parties are known as ''parties in interest.'' Under section 3(14) of ERISA, parties in interest with respect to a plan include, among others, the plan fiduciary, a sponsoring employer of the plan, a union whose members are covered by the plan, service providers with respect to the plan, and certain of their affiliates.[6] The prohibited transaction provisions under section 406(a) of ERISA and 4975(c)(1) of the Code prohibit, in relevant part, sales, leases, loans or the provision of services between a party in interest and a plan (or an entity whose assets are deemed to constitute the assets of a plan), as well as the use of plan assets by or for the benefit of, or a transfer of plan assets to, a party in interest.[7] Under the authority of section 408(a) of ERISA and section 4975(c)(2) of the Code, the Department has the authority to grant exemptions from such ''prohibited transactions'' in accordance with the procedures set forth in 29 CFR part 2570, subpart B (76 FR 66637, 66644, October 27, 2011).

4. PTE 84–14 exempts certain prohibited transactions between a party in interest and an ''investment fund'' (as defined in Section VI(b) of PTE 84–14) [8] in which a plan has an interest, if the investment manager satisfies the definition of ''qualified professional asset manager'' (QPAM) and satisfies additional conditions for the exemption. PTE 84–14 was developed and granted based on the essential premise that broad relief could be afforded for all types of transactions in which a plan engages only if the commitments and the investments of plan assets and the negotiations leading thereto are the sole responsibility of an independent, discretionary, manager.[9]

5. However, Section I(g) of PTE 84–14 prevents an entity that may otherwise meet the definition of QPAM from utilizing the exemptive relief provided by PTE 84–14, for itself and its client plans, if that entity or an ''affiliate'' [10] thereof or any owner, direct or indirect, of a 5 percent or more interest in the QPAM has, within 10 years immediately preceding the transaction, been either convicted or released from imprisonment, whichever is later, as a result of criminal activity described in that section. Section I(g) was included in PTE 84–14, in part, based on the expectation that a QPAM, and those who may be in a position to influence its policies, maintain a high standard of integrity.[11]

Previous Convictions

6. UBS Securities Japan was previously convicted (2013 Conviction) of a crime arising out of its fraudulent submission of Yen London Interbank Offer Rate (Yen LIBOR) rates between 2006 and 2009, and its participation in a scheme to defraud counterparties to interest rate derivatives trades executed on its behalf, by secretly manipulating certain benchmark interest rates, to which the profitability of those trades was tied. This crime was described in detail in PTE 2013–09.[12]

Although UBS and the United States Department of Justice (DOJ) entered into a Non-Prosecution Agreement (the LIBOR NPA) related to UBS's misconduct involving its submission of Yen LIBOR rates and other benchmark rates between 2001 and 2010, the DOJ subsequently determined that the LIBOR NPA had been breached due to, among other things, UBS having engaged in deceptive currency trading and sales practices in conducting certain foreign exchange (FX) market transactions, as well as collusive conduct in certain FX markets (FX Misconduct). UBS then entered a guilty plea and was itself convicted (2018 Conviction) of a crime arising out of UBS's scheme to defraud counterparties to interest rate derivatives transactions, by secretly manipulating benchmark interest rates to which the profitability of those transactions was tied. This crime was described in detail in PTE 2017–07.[13]

[4] The Summary of Facts and Representations is based on the Applicants' representations, unless indicated otherwise.

[5] UBS Asset Management (Americas) Inc. and UBS Realty Investors LLC are wholly-owned by UBS Americas, Inc., a wholly-owned subsidiary of UBS AG. UBS Hedge Fund Solutions LLC (formerly UBS Alternative and Quantitative Investments, LLC) and UBS O'Connor LLC are wholly-owned by UBS Americas Holding LLC, a wholly-owned subsidiary of UBS AG.

[6] Under the Code such parties, or similar parties, are referred to as ''disqualified persons.''

[7] The prohibited transaction provisions also include certain fiduciary prohibited transactions under section 406(b) of ERISA and 4975(c)(1)(E) and (F) of the Code. These include transactions involving fiduciary self-dealing, fiduciary conflicts of interest, and kickbacks to fiduciaries. PTE 84–14 provides only very narrow conditional relief for transactions described in Section 406(b) of ERISA.

[8] An ''investment fund'' includes single customer and pooled separate accounts maintained by an insurance company, individual trusts and common, collective or group trusts maintained by a bank, and any other account or fund to the extent that the disposition of its assets (whether or not in the custody of the QPAM) is subject to the discretionary authority of the QPAM.

[9] *See* 75 FR 38837, 38839 (July 6, 2010).

[10] Section VI(d) of PTE 84–14 defines the term ''affiliate'' for purposes of Section I(g) as ''(1) Any person directly or indirectly through one or more intermediaries, controlling, controlled by, or under common control with the person, (2) Any director of, relative of, or partner in, any such person, (3) Any corporation, partnership, trust or unincorporated enterprise of which such person is an officer, director, or a 5 percent or more partner or owner, and (4) Any employee or officer of the person who- (A) Is a highly compensated employee (as defined in Section 4975(e)(2)(H) of the Code) or officer (earning 10 percent or more of the yearly wages of such person), or (B) Has direct or indirect authority, responsibility or control regarding the custody, management or disposition of plan assets.''

[11] *See* 47 FR 56945, 56947 (December 21, 1982).

[12] *See* PTE 2013–09, 78 FR 56740 (September 13, 2003).

[13] *See* PTE 2017–07, 82 FR 61916 (December 29, 2017).

Previous Exemptions

7. PTE 2013–09 allowed UBS QPAMs to continue to rely on PTE 84–14, notwithstanding the 2013 conviction, as long as a number of conditions were met. One of those conditions requires that UBS or any of its affiliates may not be further convicted of a crime described in Section I(g) of PTE 84–14. The 2018 Conviction violated this condition in PTE 2013–09 and therefore, the UBS QPAMs could no longer rely on the relief provided by PTE 2013–09. The Department granted PTE 2017–07 to allow the UBS QPAMs to continue to rely on PTE 84–14 notwithstanding the Convictions.

2019 French Conviction

8. In 2013, France opened an investigation into UBS, UBS France, and certain former employees of UBS France S.A. The investigation centered on the maintenance of foreign (''cross-border'') UBS bank accounts held for private citizens. The investigating judges closed the investigation in February 2016. UBS and UBS France received the National Financial Prosecutor's recommendation (''requisitoire'') in July 2016 that charges be filed. The investigating judges issued the trial order (''Ordonnance de renvoi'') in March 2017 that set out the precise charges against UBS, UBS France, and the individual former employees. UBS was charged with: (1) ''illicit solicitation,'' based on the alleged solicitation of French clients within French territory from 2004–2011 by Swiss-based UBS client advisors without authorization to conduct such business in France; and (2) laundering the proceeds of tax fraud, based on UBS's alleged assistance from 2004 to 2012 to French taxpayers in opening bank accounts outside of France to conceal their identities from relevant authorities for the purposes of alleged tax evasion. Following a trial in the French First Instance Court, UBS and UBS France were convicted of illegally soliciting clients from 2004 to 2012 and laundering the proceeds of tax fraud from 2004 to 2012. The French court imposed penalties of 3.7 billion Euros on UBS and 15 million Euros on UBS France. UBS and UBS France were also assessed civil damages of 800 million Euros by the French court. UBS and UBS France are appealing the 2019 French Conviction.

The 2019 French Conviction violated PTE 2017–07 and therefore, the UBS QPAMs could no longer rely on the relief provided by PTE 2017–07 as of the 2019 French Conviction Date. As stated above, the Department granted PTE 2019–01 to allow the UBS QPAMs to rely on PTE 84–14 notwithstanding the Convictions and the 2019 French Conviction for a period of one-year.

Current Exemption Request

9. On June 3, 2019, the UBS QPAMs filed an exemption request to continue to rely on PTE 84–14 after the expiration of the temporary one-year exemption, PTE 2019–01. The UBS QPAMs request that the Department issue an exemption which would allow for the continued reliance on PTE 84–14 by the UBS QPAMs notwithstanding the Convictions and the 2019 French Conviction. The UBS QPAMs request an exemption that covers the remaining disqualification period under Section I(g) of PTE 84–14 (nine years beginning on February 20, 2020), and that the exemption contain the same conditions as PTE 2017–07.

10. The UBS QPAMs represent they are separate entities from the entities involved in the 2019 French Conviction and none of the UBS QPAMs or their personnel knew of, had reason to know of, or participated in the conduct that is the subject of the 2019 French Conviction. Additionally, the UBS QPAMs represent that neither the UBS QPAMs nor their personnel received direct compensation, or knowingly received indirect compensation, in connection with the conduct that is the subject of the 2019 French Conviction. Furthermore, the UBS QPAMs represent that no UBS QPAM exercised authority over the assets of any plan in a manner that it knew or should have known would further the conduct that is the subject of the 2019 Conviction, or otherwise caused the UBS QPAMs, their affiliates, or related parties to directly or indirectly profit from the conduct that is the subject of the 2019 French Conviction.

11. The UBS QPAMs represent that the conduct that is the subject of the 2019 French Conviction relates to cross-border banking practices, and that UBS was the first Swiss bank to accept responsibility for the misconduct and to remediate. According to the UBS QPAMs, UBS resolved similar charges in the U.S. when UBS entered into a deferred prosecution agreement with the United States Department of Justice (DOJ) in 2009 regarding cross-border banking practices from 2000 through 2007 taking place at UBS's now-defunct U.S. cross-border desk within the UBS wealth management business. Additionally, according to the UBS QPAMs, by 2010, UBS adopted a global Policy on Cross-border Standards establishing global standards and a robust framework for compliance with applicable laws and regulations in each country in which UBS continued its cross-border business. UBS also made a decision to provide wealth management services only to clients willing to attest that they are in compliance with their tax obligations of their home countries.

12. The UBS QPAMs represent that the majority of the conduct that is the subject of the 2019 French Conviction occurred prior to 2012 when UBS implemented reforms to its control framework and compliance programs. UBS QPAMs state that UBS substantially transformed its organization through a series of remedial measures and compliance reforms from 2008 through 2011. These efforts, according to the UBS QPAMs, were a result of significant changes to UBS's senior management in late 2011 and early 2012 which were supported by the highest levels of the bank, including the appointment of a new Chief Executive Officer, a new Chairman of the Board of Directors, and a new Chief Risk Officer. Moreover, the UBS QPAMs represent that the cross-border criminal misconduct in France took place prior to the granting of PTE 2013–09 and PTE 2017–07 which imposed additional comprehensive conditions on UBS and the UBS QPAMs designed to protect the rights of participants and beneficiaries.

13. The UBS QPAMs represent they have worked diligently to comply with each of the conditions of PTE 2013–09, PTE 2016–17,[14] and PTE 2017–07. The UBS QPAMs claim that the policies, practices and conditions implemented in accordance with PTE 2017–07 are sufficient to protect the rights and interest of plans and plan participants particularly. They argue that this is particularly true because all the conduct that is the subject of the 2019 French Conviction occurred before they had reformed their compliance structure and culture in response to the LIBOR and FX matters, implemented the protective conditions of PTE 2017–07, and engaged in the cross-border remediation efforts noted above.

Term of the Exemption

14. As noted above, the UBS QPAMs have requested a nine year exemption. The UBS QPAMs state that, by the time a final exemption takes effect, they will have been operating under the comprehensive conditions of PTE 2017–07 for more than two years and under the conditions of PTE 2013–09 for nearly six years. The UBS QPAMs state

[14] 81 FR 94049 (December 22, 2016). PTE 2016–17 is a temporary exemption for UBS QPAMs to rely on the exemptive relief provided by PTE 84–14, notwithstanding the Convictions, for up to twelve months from January 5, 2017.

that the Department has had sufficient time to assess the UBS QPAMs' compliance with these conditions and consider any relevant comments. In addition, they claim that granting longer-term relief would be in the best interest of plans, which are otherwise uncertain of the duration of relief and, accordingly, have to expend the time and resources necessary to be sure that they can replace the UBS QPAMs in the event that the Department does not grant permanent relief. The UBS QPAMs argue that nothing about the 2019 French Conviction would prevent the Department from granting an exemption for the remaining disqualification period provided under Section I(g).

The UBS QPAMs also argue that, in other cases, the Department has granted exemptions for the full 10-year period based on the foreign conviction of an affiliate of the QPAM where, as in this instance, the QPAM did not engage in the misconduct or act as a fiduciary to ERISA-covered plans or exercise discretionary control over ERISA-covered assets. Moreover, the UBS QPAMs state the conduct that is the subject of the 2019 French Conviction occurred over ten years ago, and well before the Department had concluded the conditions of the 2013 exemption were sufficiently protective. Accordingly, they argue that the conditions of that exemption are appropriate for the 2019 French Conviction as well. The UBS QPAMs also request that the exemption's term be defined in such a way that if UBS's appeal of the 2019 French Conviction is successful, the term of the exemption would be for ten years, beginning from the date of the 2018 Conviction.

The Department is not persuaded that the exemptive relief for the remaining nine year disqualification period under PTE 84–14 Section I(g) would be protective and in the best interest of participants and beneficiaries. This exemption, if granted, would provide exemptive relief notwithstanding the 2013 Conviction, the 2018 Conviction, as well as the 2019 French Conviction. As stated in previous exemptions, the Department considers the entirety of the record before it when developing an exemption. In the case of the UBS QPAMs, that record includes consideration of the 2013 Conviction, the Plea Agreement, the LIBOR NPA in which UBS agreed, among other things, not to commit any crime in violation of U.S. laws for a period of two years and the Plea Agreement, the breach of the LIBOR NPA, the 2018 conviction, and the 2019 French Conviction.

Both the LIBOR NPA and the Plea Agreement contain a Statement of Facts (SOF) that describes the circumstances of UBS's scheme to defraud counterparties to interest rate derivatives transactions by secretly manipulating benchmark interest rates to which the profitability of those transactions was tied. The SOF describes the wide-ranging and systematic efforts, practiced nearly on a daily basis, by several UBS employees: (a) To manipulate the YEN LIBOR in order to benefit UBS's trading positions; (b) to use cash brokers to influence other Contributor Panel banks' Yen LIBOR submissions; and (c) to collude directly with employees at other Contributor Panel banks to influence those banks' Yen LIBOR submissions. The Department considered the DOJ's determination that UBS subsequently breached the LIBOR NPA when certain employees engaged in fraudulent and deceptive trading and sales practices in certain foreign exchange (FX) market transactions via telephone, email and/or electronic chat, to the detriment of UBS customers.[15] These employees also colluded with other actors in certain FX markets in order to manipulate those markets. The Department considered the Factual Basis for Breach attached to the Plea Agreement which details that conduct (the FX Misconduct as defined in Section II(d)).

In developing this exemption, the Department also considered statements from a number of regulators about the FX Misconduct. The Financial Conduct Authority's (FCA) Final Notice dated November 11, 2014 states: ''During the Relevant Period, UBS did not exercise adequate and effective control over its G10 spot FX trading business. . . . The front office failed adequately to discharge these responsibilities with regard to obvious risks associated with confidentiality, conflicts of interest and trading conduct.'' That notice also states: ''These failings occurred in circumstances where certain of those responsible for managing front office matters were aware of and/or at times involved in behaviors described above.'' The United States Commodity and Futures Trading Commission's (CFTC) Order dated November 11, 2014 states: ''During the Relevant Period, UBS failed to adequately address the risks associated with its FX traders participating in the fixing of certain FX benchmark rates. UBS also lacked adequate internal controls in order to prevent its FX traders from engaging in improper communications with certain FX traders at other banks. UBS lacked sufficient policies, procedures and training specifically governing participation in trading around the FX benchmark rates. . . .'' The Department took into consideration the monetary penalties imposed and the agreements by UBS with certain other U.S. and non-U.S. regulatory agencies to further strengthen its internal controls.

In light of the breach of two previous exemptions, which were themselves necessitated by criminal conduct, the severity of the misconduct, and the repeated criminal violations, the Department has concluded that it is appropriate to propose a limited five-year term of relief. Relevant to this determination is a finding set forth in an audit report required by PTE 2016–17, performed by Fiduciary Counselors, Inc., dated August 7, 2018.[16] The five-year term and the exemption's protective conditions reflect the Department's intent to protect Covered Plans that entrust substantial assets with a UBS QPAM, following serious misconduct, supervisory failures, repeated criminal convictions, and violations of a two previous exemptions.

The 2019 French Conviction violated one of the conditions of the previous exemptions. The conduct that is the subject of the 2019 French Conviction reinforces the Department's concerns about the need for careful scrutiny to ensure that the interests of plan participants, beneficiaries, and IRA owners are safeguarded. As stated in PTE 2017–07, the five-year term gives the Department the opportunity to review, on an ongoing basis, the UBS QPAMs' adherence to the conditions set out herein. The five-year period stresses the importance of the UBS QPAMs' efforts to maintain supervisory mechanisms, policies, and procedures that safeguard plans and IRAs, and guard against the risk of further misconduct.

The Department additionally notes that, if the UBS QPAMs' appeal of the 2019 French Conviction is successful the UBS QPAMs may rely on PTE 2017–

[15] The circumstances of UBS's violation of the terms of the LIBOR NPA are described in detail in Exhibit 1 to the Plea Agreement, entitled ''The Factual Basis for Breach of the Non-Prosecution Agreement'' (the Factual Basis for Breach).

[16] In that audit report, Fiduciary Counselors, Inc. states, on page 26: ''Asset Management [QPAM] informed us that during the Audit Period it utilized PTE 86–128 with respect to effecting securities transactions using affiliated brokers for one ERISA Plan client. However, it does not appear that Asset Management correctly followed all of the requirement of PTE 86–128. Specifically, it does not appear that Asset Management provided its client with the required annual termination notice. Additionally, it does not appear that Asset Management timely provided its client with the required annual disclosure summary.

07, PTE 2019–01, or, if granted, this exemption, during their respective effective periods, as long as the applicable conditions therein are met.[17] The Applicants may apply for an additional extension at such time as they believe appropriate. Before granting an extension, however, the Department expects to consider carefully the efficacy of this exemption and any public comments on additional extensions, particularly including comments on how well the exemption has or has not worked to safeguard the interests of Covered Plans.

Conditions of the Exemption

15. The UBS QPAMs have requested that the Department omit from this proposed exemption any reference to foreign convictions as it appears in Section I(l) of PTE 2019–01. PTE 2019–01 Section I(l) states in part ''if, during the Exemption Period, an entity within the UBS corporate structure is convicted of a crime described in Section I(g) of PTE 84–14 . . . , including a conviction in a foreign jurisdiction for a crime described in Section I(g) of PTE 84–14, relief in this exemption would terminate immediately.'' The UBS QPAMs argue the inclusion of this language by the Department ''is superfluous given the Department's current stated interpretation of Section I(g), unnecessary given the Department's articulation of that interpretation throughout the temporary exemption's preamble, and could produce uncertainty if included in a longer-term exemption in the event the Department were subsequently to 'reverse its view' on Section I(g)'s applicability to foreign convictions.'' Given the Department's current stated interpretation of Section I(g) as articulated in PTE 2019–01, it adopts the UBS QPAMs' request.

16. The UBS QPAMs recommended the proposed exemption contain certain revisions to the conditions of the one-year exemption, PTE 2019–01, to align this proposed exemption with PTE 2017–07.

In developing administrative exemptions under Section 408(a) of ERISA, the Department seeks to implement its statutory directive to grant only exemptions that are appropriately protective of affected plans and IRAs and in their interest. In discharging this obligation, the Department will sometimes impose conditions that depart from those provided in older exemptions based on the Department's experience with those exemptions, the Department's conclusion that new or revised conditions will better serve the interests of affected plans and IRAs, similar changes in more recent exemptions applicable to other firms providing the same services, and other factors. In the Department's view, the conditions set forth in PTE 2019–01 best protect the interests of plan participants, beneficiaries, and IRA owners, and are consistent with the terms of similar exemptions relied upon by other service providers. Therefore, the conditions of this proposed exemption follow the conditions of PTE 2019–01 while incorporating certain updates the Department finds necessary to protect the interest of plans and IRAs and certain conditions that have been modified at the request of the UBS QPAMs.

17. The UBS QPAMs specifically request that the Department modify text in Section I(a) of PTE 2019–01, which conditions relief on the fact that third parties engaged ''on behalf of'' the UBS QPAMs did not ''know of, have reason to know of, or participate in'' the criminal conduct that is the subject of the 2019 French Conviction. In particular, the UBS QPAMs request deletion of the exemption's reference to such third parties who ''had responsibility for, or exercised authority in connection with the management of plan assets.'' Additionally, the UBS QPAMs object to the exemption's provision stating that a person is treated as having participated in criminal misconduct not only if the person actively engaged in the misconduct, but also if he or she knowingly approved of the criminal conduct or, with knowledge of the misconduct, failed to take active steps to prohibit it, such as reporting the conduct to supervisors.

The Department declines to make the requested modifications to Section I(a) of the proposed exemption. In the Department's view, the UBS QPAMs are appropriately held accountable in this manner for the conduct of the third parties they engaged on their behalf to manage or exercise authority over plan assets. If such parties knowingly participated in the criminal conduct that is the subject of the 2019 French conviction, the QPAMs' culpability is potentially greater than the Department assumed in drafting exemption conditions, and there may be need for greater protections or reduced relief.

Moreover, the Department's expectation of adherence to high standards of integrity is not satisfied merely by avoiding actively engaging in misconduct, but also extends to taking measures to stop misconduct that is known or should be known. Silent acquiescence to criminal conduct falls far short of the standards expected of parties relying on the exemption.

The condition as written in PTE 2019–01 was specifically designed to give assurance that the UBS QPAMs and third parties engaged on the UBS QPAMs' behalf did not participate, approve, or facilitate criminal misconduct. Accordingly, the condition treats as knowing participation a party's failure to take active steps to prevent the criminal conduct that is the subject of the 2019 exemption.

18. The UBS QPAMs similarly request that Section I(b) of the proposed exemption not include the condition set forth in Section I(b) of PTE 2019–01, which provides that the parties engaged to act on behalf of the UBS QPAMs must not have received compensation in connection with the criminal conduct that is the subject of the 2019 French Conviction. This condition too reflects the Department's view that the QPAMs and the parties engaged on their behalf to manage or exercise authority over plan assets should adhere to high standards of integrity. Accordingly, they should neither have participated in nor profited from the criminal conduct that is the subject of the 2019 French conviction. If such parties, in fact, received direct or indirect compensation in connection with the criminal conduct, their culpability, and the culpability of the USB QPAMs, is potentially greater than the Department assumed in drafting exemption conditions, and there may be need for greater protections or reduced relief.

Therefore, Section I(b) of the proposed exemption will continue to extend the prohibition against the receipt of compensation in connection with the conduct that is the subject of the 2019 French Conviction to third parties with responsibility or authority over plan assets.

19. The UBS QPAMs request that the timing of the audit periods and the Exemption Review be such that the initial periods under audit and review be for a period of thirteen months. The Department has accommodated this request and Sections I(i) and I(m) of the proposed exemption provide for initial periods of thirteen months.

Statutory Findings

20. Section 408(a) of ERISA provides, in part, that the Department may not grant an exemption unless the Department finds that the exemption is administratively feasible, in the interest of affected plans and of their participants and beneficiaries, and

[17] In this circumstance, the Department would consider good faith compliance with the conditions of PTE 2019–01 and this exemption, if granted, as compliance with the conditions of PTE 2017–07.

protective of the rights of such participants and beneficiaries. These criteria are discussed below.

a. ''*Administratively Feasible.*'' The Department has tentatively determined that the proposal is administratively feasible since, among other things, a qualified independent auditor will be required to perform an in-depth audit covering, among other things, each UBS QPAM's compliance with the exemption, and a corresponding written audit report will be provided to the Department and available to the public. The independent audit will provide an incentive for, and a measure of, compliance, while reducing the immediate need for review and oversight by the Department.

b. ''*In the interest of.*'' The Department has tentatively determined that the proposed exemption is in the interests of the participants and beneficiaries of each affected Covered Plan. Based on the representation of the UBS QPAMs, it is the Department's understanding that if the requested exemption were denied, client ERISA-covered plans would be unable to maintain their investment strategy with their current asset manager and would be subject to disruptions and costs associated with changing asset managers. The UBS QPAMs claim that their ERISA plan clients have long availed themselves of the benefit of the UBS QPAMs' investment expertise, even after the grant of PTE 2013–09 and PTE 2017–07. The UBS QPAMs state that granting the exemption would enable the UBS QPAMs to continue to effect a wide range of beneficial transactions on their ERISA clients' behalf without undue administrative delay or other conditions or limitations that could be disadvantageous to the ERISA plan clients. The UBS QPAMs represent that without the ability to serve as QPAMs certain prudent and appropriate investment opportunities may not be available to such ERISA plan clients. The UBS QPAMs state that PTE 84–14 is one of the most commonly used prohibited transaction exemptions and, for some transactions, may be the only available exemption. In addition, the UBS QPAMs and counterparties to transactions with the UBS QPAMs frequently rely on PTE 84–14 as a backup exemption for transactions. The UBS QPAMs claim that some third parties may elect not to engage in transactions involving plan assets managed by the UBS QPAMs without the assurance they receive from the availability of PTE 84–14 or, if they do engage in the transactions, may only do so on less advantageous terms.

Additionally, the UBS QPAMs represent that if client ERISA plans were to move to new asset managers they could incur transition costs, including the costs associated with identifying an asset manager (such as the costs and management time required in a Request for Proposal process, consultant fees and other due diligence expenses), brokerage and other transaction costs associated with the sale of portfolio investments to accommodate the investment policies and strategy of the new asset manager, the opportunity costs of holding cash pending investment by the new asset manager, and lost investment opportunities in connection with a change of asset managers. The UBS QPAMs claim that losing the ability to use PTE 84–14 would make it difficult, costly, and impracticable to enter into many transactions that are in the best interests of ERISA client plans, reducing plan choices, especially among large institutional banks.

Further, the UBS QPAMs represent that if the requested exemption were not granted, ERISA plan clients could be effectively prohibited from entering into certain transactions, either because no other exemption is available or the counterparty is not willing to enter into the transaction without the protections provided by PTE 84–14. The UBS QPAMs claim that the loss of the ability to use PTE 84–14 could significantly delay or even make impossible transactions that would be beneficial for the ERISA plans. The UBS QPAMs also represent that counterparties could seek to terminate contracts for certain outstanding transactions (including swaps) that require the UBS QPAMs to represent that they are QPAMs and/or use PTE 84–14 and additionally, pursuant to these contracts, swap transactions with certain counterparties could automatically and immediately be terminated without any notice or action of such counterparties, even if other prohibited transaction exemptions are available which could result in significant losses for the client ERISA plans.

c. ''*Protective of.*'' The Department has tentatively determined that the exemption, as proposed, will be protective of the rights of participants and beneficiaries of affected plans and IRAs and will appropriately protect plans subject to Part 4 of Title I of ERISA (an ERISA-covered plan) or plans subject to section 4975 of the Code (an IRA), in each case, with respect to which a UBS QPAM relies on PTE 84–14, or with respect to which a UBS QPAM (or any UBS affiliate) has expressly represented that the manager qualifies as a QPAM or relies on the QPAM class exemption (PTE 84–14) (Covered Plans).[18] This exemption, if granted, would provide relief for the UBS QPAMs to rely on PTE 84–14, notwithstanding the 2013 Conviction, the 2018 Conviction, and the 2019 French Conviction for a five-year period from the expiration of PTE 2019–01. The proposal has essentially the same conditions as PTE 2019–01.

Relief is necessary since, at present, the judgment in the French First Instance Court constitutes a conviction, consistent with the Department's prior practice and treatment of foreign convictions.[19] If UBS is successful in its appeal of the verdict of the French First Instance Court, the UBS QPAMs may rely on PTE 2017–07, PTE 2019–01, or, if granted this exemption, during the exemptions' respective effective periods, as long as the applicable conditions therein are met.[20]

Several of the conditions are aimed at ensuring that the UBS QPAMs were not involved in the conduct that gave rise to any of the Convictions and the 2019 French Conviction. Accordingly, the proposal generally precludes relief to the extent the UBS QPAMs and any other party engaged on behalf of such QPAMs who had responsibility for, or exercised authority in connection with the management of plan assets, and were aware of, participated in, approved of, furthered, benefitted, or profited from: (1) The FX Misconduct; (2) the criminal conduct of UBS Securities Japan and UBS that is the subject of the Convictions; or (3) the criminal conduct of UBS and UBS France that is the subject of the 2019 French Conviction.[21] Further, the UBS QPAMs may not employ or knowingly engage any of the individuals that participated in the conduct attributable to the FX Misconduct, the 2013 and 2018 Convictions, or the 2019 French Conviction.

The proposal further provides that no UBS QPAM will use its authority or

[18] For purposes of this exemption, a Covered Plan does not include an ERISA-covered plan or IRA to the extent the UBS QPAM has expressly disclaimed reliance on QPAM status or PTE 84–14 in entering into a contract, arrangement, or agreement with the ERISA-covered plan or IRA.

[19] The UBS QPAMs have requested the Department revisit application of PTE 84–14, Section I(g), to foreign convictions through an Advisory Opinion. The Department has not yet responded to this request.

[20] In this circumstance, the Department would consider good faith compliance with the conditions of PTE 2019–01 and this exemption, if granted, as compliance with the conditions of PTE 2017–07.

[21] For clarity, references to the UBS QPAMs include any individual employed by or engaged to work on behalf of these QPAMs during or after the period of misconduct.

influence to direct an ''investment fund'' that is subject to ERISA or the Code and managed by such UBS QPAM with respect to one of more Covered Plans, to enter into any transaction with UBS, UBS Securities Japan, or UBS France, or engage UBS, UBS Securities Japan, or UBS France to provide any service to such investment fund, for a direct or indirect fee borne by such investment fund, regardless of whether such transaction or service may otherwise be within the scope of relief provided by an administrative or statutory exemption. Also, with very limited exceptions, UBS, UBS Securities Japan, and UBS France may not act as a fiduciary within the meaning of section 3(21)(A)(i) or (iii) of ERISA, or section 4975(e)(3)(A) and (C) of the Code, with respect to ERISA-covered plan and IRA assets.

The proposal requires each UBS QPAM to update, implement and follow certain written policies and procedures (the Policies). These Policies are similar to the policies and procedures mandated by PTE 2019–01. In general terms, the Policies must require, and must be reasonably designed to ensure that, among other things: The asset management decisions of the UBS QPAMs are conducted independently of the corporate management and business activities of UBS, UBS Securities Japan, and UBS France; the UBS QPAMs fully comply with ERISA's fiduciary duties, and with ERISA and the Code's prohibited transaction provisions; the UBS QPAMs do not knowingly participate in any other person's violation of ERISA or the Code with respect to Covered Plans; any filings or statements made by the UBS QPAMs to regulators, on behalf of or in relation to Covered Plans, are materially accurate and complete; the UBS QPAMs do not make material misrepresentations or omit material information in its communications with such regulators with respect to Covered Plans; the UBS QPAMs do not make material misrepresentations or omit material information in its communications with Covered Plans; the UBS QPAMs comply with the terms of this exemption; and any violation of, or failure to comply with any of these items by the UBS QPAMs, is corrected as soon as reasonably possible upon discovery, or as soon after the UBS QPAMs reasonably should have known of the noncompliance (whichever is earlier). Any such violation or compliance failure not so corrected must be reported, upon the discovery of such failure to so correct, in writing, to appropriate corporate officers, the head of compliance and the General Counsel (or their functional equivalent), and the independent auditor responsible for reviewing compliance with the Policies.

This proposal mandates training (Training), which is similar to the training required under PTE 2019–01. In this regard, all relevant UBS QPAM asset/portfolio management, trading, legal, compliance, and internal audit personnel must be trained annually during the Exemption Period. Among other things, the Training must, at a minimum, cover the Policies, ERISA and Code compliance, ethical conduct, the consequences of not complying with the conditions of this exemption (including any loss of exemptive relief provided herein), and the requirement for prompt reporting of wrongdoing. The Training must be conducted by a professional who has been prudently selected and who has appropriate technical training and proficiency with ERISA and the Code.

Under this proposal, as in PTE 2019–01, each UBS QPAM must submit to an annual audit conducted by an independent auditor.[22] Among other things, the auditor must test a sample of each UBS QPAM's transactions involving Covered Plans, sufficient in size and nature to afford the auditor a reasonable basis to determine such QPAM's operational compliance with the Policies and Training. The auditor's conclusions cannot be based solely on the Exemption Report created by the Compliance Officer, described below, in lieu of independent determinations and testing performed by the auditor.

The Audit Report must be certified by the General Counsel or one of the three most senior executive officers of the UBS QPAM to which the Audit Report applies. A copy of the Audit Report must be provided to the Risk Committee of UBS's Board of Directors. Among other things, UBS must submit to the Office of Exemption Determinations (OED), any engagement agreement with an auditor to perform the audit required under the terms of this exemption no later than two (2) months after the execution of such agreement;

This proposal requires that, as of the effective date this exemption, and throughout the Exemption Period, with respect to any arrangement, agreement, or contract between a UBS QPAM and a Covered Plan, the UBS QPAM must agree and warrant: (i) To comply with ERISA and the Code, as applicable with respect to such Covered Plan; and (ii) to refrain from engaging in prohibited transactions that are not otherwise exempt (and to promptly correct any inadvertent prohibited transactions). The UBS QPAMs must further agree and warrant to comply with the standards of prudence and loyalty set forth in section 404 of ERISA with respect to each such ERISA-covered plan and IRA to the extent that section 404 is applicable. Each UBS QPAM must also agree and warrant to indemnify and hold harmless such Covered Plan for any actual losses resulting directly from any of the following: (a) A UBS QPAM's violation of ERISA's fiduciary duties, as applicable, and/or the prohibited transaction provisions of ERISA and the Code, as applicable; (b) a breach of contract by the UBS QPAM; or (c) any claim arising out of the failure of such UBS QPAM to qualify for the exemptive relief provided by PTE 84–14 as a result of a violation of Section I(g) of PTE 84–14 other than the 2013 Conviction, the 2018 Conviction, or the 2019 French Conviction. This condition applies only to actual losses caused by the UBS QPAM. As noted above, the Applicant has identified a wide range of potential harm and costs that may be incurred by plans and IRAs if the UBS QPAMs were no longer able to rely on PTE 84–14. The Department views actual losses arising from unwinding transactions with third parties, and from transitioning Covered Plan assets to third parties, to be ''direct'' results of violating the terms of this provision.

This exemption contains specific notice requirements. In this regard, each UBS QPAM will provide a notice of the exemption, along with a separate summary describing the facts that led to the Conviction (the Summary), which have been submitted to the Department, and a prominently displayed statement (the Statement) that the Convictions, and in the Department's view, the 2019 French Conviction, each separately result in a failure to meet a condition in PTE 84–14 and/or PTE 2017–07, to each sponsor and beneficial owner of a Covered Plan, or the sponsor of an investment fund in any case where a UBS QPAM acts as a sub-advisor to the investment fund in which such ERISA-covered plan and IRA invests. The notice, Summary and Statement must be provided prior to, or contemporaneously with, the client's receipt of a written asset management agreement from the UBS QPAM.

[22] Audits covering time periods prior to the 2019 French Conviction Date must be completed in accordance with the requirements of PTE 2017–07 and PTE 2019–01, as applicable. Accordingly, the last audit performed pursuant to PTE 2017–07 will cover the period beginning January 10, 2018 and ending on the 2019 French Conviction Date and the corresponding Audit Report must be completed within six months and submitted to the Department within 45 days of completion.

Disclosures may be delivered electronically.

The proposal requires that each UBS QPAM maintain records necessary to demonstrate that the conditions of this exemption have been met, for six (6) years following the date of any transaction for which such UBS QPAM relies upon the relief in the exemption. The proposal mandates that UBS continue to designate a senior compliance officer (the Compliance Officer) who will be responsible for compliance with the Policies and Training requirements described herein. The Compliance Officer must conduct an annual reviews (the Exemption Review) during the Exemption Period [23] to determine the adequacy and effectiveness of the implementation of the Policies and Training. The Compliance Officer must be a professional with extensive relevant experience and must have a reporting line within UBS's Compliance and Operational Risk Control function to the Head of Compliance and Operational Rick Control, Asset Management. At a minimum, the Exemption Review must include review of the following items: (i) Any compliance matter related to the Policies or Training that was identified by, or reported to, the Compliance Officer during the previous year; (ii) the most recent Audit Report issued pursuant to this exemption or PTE 2019–01; (iii) any material change in the relevant business activities of the UBS QPAMs; and (iv) any change to ERISA, the Code, or regulations that may be applicable to the activities of the UBS QPAMs.

The Compliance Officer must prepare a written report (an Exemption Report) that summarizes his or her material activities during the Exemption Period and sets forth any instance of noncompliance discovered during the Exemption Period, and any related corrective action. In each Exemption Report, the Compliance Officer must certify in writing that to his or her knowledge the report is accurate and the UBS QPAMs have complied with the Policies and Training, and/or corrected (or are correcting) any instances of noncompliance.

Each Exemption Report must be provided to the appropriate corporate officers of UBS and each UBS QPAM to which such report relates and to the head of compliance and the General Counsel (or their functional equivalent) of the relevant UBS QPAM. The Exemption Report must be made unconditionally available to the independent auditor. The Exemption Review, including the Compliance Officer's written Exemption Report, must be completed within three (3) months following the end of the period to which it relates.

UBS must also immediately disclose to the Department any Deferred Prosecution Agreement (a DPA) or Non-Prosecution Agreement (an NPA) with the U.S. Department of Justice, entered into by UBS or any of its affiliates (as defined in Section VI(d) of PTE 84–14) in connection with conduct described in Section I(g) of PTE 84–14 or section 411 of ERISA. UBS must also immediately provide the Department with any information requested by the Department, as permitted by law, regarding the agreement and/or conduct and allegations that led to the agreement.

The proposal mandates that, among other things, each UBS QPAM clearly and prominently inform Covered Plan clients of their right to obtain a copy of the Policies or a description (Summary Policies) which accurately summarizes key components of the UBS QPAM's written Policies developed in connection with this exemption. If the Policies are thereafter changed, each Covered Plan client must receive a new disclosure within six (6) months following the end of the calendar year during which the Policies were changed.[24] With respect to this requirement, the description may be continuously maintained on a website, provided that such website link to the Policies or Summary Policies is clearly and prominently disclosed to each Covered Plan.

The proposal requires that UBS QPAMs must comply with each condition of PTE 84–14, as amended, with the sole exception of the conduct that is attributable to the 2013 Conviction, the 2018 Conviction and the 2019 French Conviction. If, during the Exemption Period, an entity within the UBS corporate structure is convicted of a crime described in Section I(g) of PTE 84–14, (other than the 2013 Conviction, 2018 Conviction, and the 2019 French Conviction) relief in this exemption, if granted, would terminate immediately.

Summary

21. Given the conditions described above, the Department has tentatively determined that providing five-year relief to the Applicant satisfies the statutory requirements for an exemption under section 408(a) of ERISA and section 4975(c)(2) of the Code.

Notice to Interested Persons

Notice of the proposed exemption will be provided to all interested persons within fifteen (15) days of the publication of the notice of proposed five-year exemption in the **Federal Register**. The notice will be provided to all interested persons in the manner described in Section I(k) of this proposed five-year exemption and will contain the documents described therein and a supplemental statement, as required pursuant to 29 CFR 2570.43(a)(2). The supplemental statement will inform interested persons of their right to comment on and to request a hearing with respect to the pending exemption. All written comments and/or requests for a hearing must be received by the Department within forty five (45) days of the date of publication of this proposed five-year exemption in the **Federal Register**. All comments will be made available to the public.

Warning: If you submit a comment, EBSA recommends that you include your name and other contact information in the body of your comment, but DO NOT submit information that you consider to be confidential, or otherwise protected (such as Social Security number or an unlisted phone number) or confidential business information that you do not want publicly disclosed. All comments may be posted on the internet and can be retrieved by most internet search engines.

General Information

The attention of interested persons is directed to the following:

(1) The fact that a transaction is the subject of an exemption under section 408(a) of the Act and/or section 4975(c)(2) of the Code does not relieve a fiduciary or other party in interest or disqualified person from certain other provisions of the Act and/or the Code, including any prohibited transaction provisions to which the exemption does not apply and the general fiduciary responsibility provisions of section 404 of the Act, which, among other things, require a fiduciary to discharge his duties respecting the plan solely in the interest of the participants and beneficiaries of the plan and in a prudent fashion in accordance with section 404(a)(1)(b) of the Act; nor does it affect the requirement of section 401(a) of the Code that the plan must operate for the exclusive benefit of the

[23] All Exemption Reviews for periods prior to the effective date of this exemption must be conducted and completed pursuant to the requirements of PTE 2017–07 or PTE 2019–01, as applicable.

[24] In the event Applicant meets this disclosure requirement through Summary Policies, changes to the Policies shall not result in the requirement for a new disclosure unless the Summary Policies are no longer accurate because of the changes.

employees of the employer maintaining the plan and their beneficiaries;

(2) Before an exemption may be granted under section 408(a) of the Act and/or section 4975(c)(2) of the Code, the Department must find that the exemption is administratively feasible, in the interests of the plan and of its participants and beneficiaries, and protective of the rights of participants and beneficiaries of the plan;

(3) The proposed exemption, if granted, will be supplemental to, and not in derogation of, any other provisions of the Act and/or the Code, including statutory or administrative exemptions and transitional rules. Furthermore, the fact that a transaction is subject to an administrative or statutory exemption is not dispositive of whether the transaction is in fact a prohibited transaction; and

(4) The proposed exemption, if granted, will be subject to the express condition that the material facts and representations contained in each application are true and complete, and that each application accurately describes all material terms of the transaction which is the subject of the exemption.

Proposed Exemption

The Department is considering granting a five-year exemption under the authority of section 408(a) of the Act (or ERISA) and section 4975(c)(2) of the Internal Revenue Code (or Code), and in accordance with the procedures set forth in 29 CFR part 2570, subpart B (76 FR 66637, 66644, October 27, 2011).[25] Effective December 31, 1978, section 102 of Reorganization Plan No. 4 of 1978, 5 U.S.C. App. 1 (1996), transferred the authority of the Secretary of the Treasury to issue exemptions of the type requested to the Secretary of Labor. Therefore, this notice of proposed exemption is issued solely by the Department.

Section I. Covered Transactions

Certain entities with specified relationships to UBS (hereinafter, the UBS QPAMs, as defined in Section II(e)) will not be precluded from relying on the exemptive relief provided by Prohibited Transaction Class Exemption 84–14 (PTE 84–14 or the QPAM Exemption) during the Exemption Period,[26] notwithstanding the 2013 Conviction of UBS Securities Japan Co., Ltd., the 2018 Conviction of UBS (collectively the Convictions, as defined in Section II(a)), and the 2019 French Conviction of UBS and UBS France (as defined in Section II(b)), provided that the following conditions are satisfied:

(a) The UBS QPAMs (including their officers, directors, agents other than UBS, UBS Securities Japan and UBS France, and the employees of such UBS QPAMs, did not know of, did not have reason to know of, or did not participate in: (1) The FX Misconduct; (2) the criminal conduct of UBS Securities Japan and UBS that is the subject of the Convictions; or (3) the criminal conduct of UBS and UBS France that is the subject of the 2019 French Conviction. Further, any other party engaged on behalf of such UBS QPAMs who had responsibility for, or exercised authority in connection with the management of plan assets did not know of, did not have reason to know of, or participate in the criminal conduct of UBS and UBS France that is the subject of the 2019 French Conviction. For purposes of this exemption, ''participate in'' refers not only to active participation in the FX Misconduct, the criminal conduct that is the subject of the Convictions, and the criminal conduct that is the subject of the 2019 French Conviction, but also to knowing approval of the criminal conduct, or knowledge of such conduct without taking active steps to prohibit such conduct, including reporting the conduct to such individual's supervisors, and to the Board of Directors;

(b) The UBS QPAMs (including their officers, directors, agents other than UBS, UBS Securities Japan, and UBS France, and employees of such UBS QPAMs) did not receive direct compensation, or knowingly receive indirect compensation, in connection with the (1) the FX Misconduct; (2) the criminal conduct of UBS Securities Japan and UBS that is the subject of the Convictions; or (3) the criminal conduct of UBS and UBS France that is the subject of the 2019 French Conviction. Further, any other party engaged on behalf of such UBS QPAMs who had responsibility for, or exercised authority in connection with the management of plan assets did not receive direct compensation, or knowingly receive indirect compensation, in connection with the criminal conduct of UBS and UBS France that is the subject of the 2019 French Conviction;

(c) The UBS QPAMs will not employ or knowingly engage any of the individuals who participated in: (1) The FX Misconduct; (2) the criminal conduct of UBS Securities Japan and UBS that is the subject of the Convictions; or (3) the criminal conduct of UBS and UBS France that is the subject of the 2019 French Conviction;

(d) At all times during the Exemption Period, no UBS QPAM will use its authority or influence to direct an ''investment fund'' (as defined in Section VI(b) of PTE 84–14) that is subject to ERISA or the Code and managed by such UBS QPAM with respect to one or more Covered Plans (as defined in Section II(c)) to enter into any transaction with UBS, UBS Securities Japan, or UBS France or to engage UBS, UBS Securities Japan, or UBS France to provide any service to such investment fund, for a direct or indirect fee borne by such investment fund, regardless of whether such transaction or service may otherwise be within the scope of relief provided by an administrative or statutory exemption;

(e) Any failure of the UBS QPAMs to satisfy Section I(g) of PTE 84–14 arose solely from the Convictions and the 2019 French Conviction;

(f) A UBS QPAM did not exercise authority over the assets of any plan subject to Part 4 of Title I of ERISA (an ERISA-covered plan) or section 4975 of the Code (an IRA) in a manner that it knew or should have known would: Further the FX Misconduct, the criminal conduct that is the subject of the Convictions, or the criminal conduct that is the subject of the 2019 French Conviction; or cause the UBS QPAM or its affiliates to directly or indirectly profit from the FX Misconduct, the criminal conduct that is the subject of the Convictions, or the criminal conduct that is the subject of the 2019 French Conviction;

(g) Other than with respect to employee benefit plans maintained or sponsored for its own employees or the employees of an affiliate, UBS, UBS Securities Japan, and UBS France will not act as fiduciaries within the meaning of section 3(21)(A)(i) or (iii) of ERISA, or section 4975(e)(3)(A) and (C) of the Code, with respect to ERISA-covered plan and IRA assets; provided, however, that UBS, UBS Securities Japan, and UBS France will not be treated as violating the conditions of this exemption solely because they acted as an investment advice fiduciary within the meaning of section 3(21)(A)(ii) of ERISA or section 4975(e)(3)(B) of the Code;

(h)(1) Each UBS QPAM must continue to maintain, adjust (to the extent necessary), implement, and follow written policies and procedures (the Policies). The Policies must require, and

[25] For purposes of this proposed three-year temporary exemption, references to section 406 of Title I of the Act, unless otherwise specified, should be read to refer as well to the corresponding provisions of section 4975 of the Code.

[26] 49 FR 9494 (March 13, 1984), as corrected at 50 FR 41430, (October 10, 1985), as amended at 70 FR 49305(August 23, 2005), and as amended at 75 FR 38837 (July 6, 2010).

must be reasonably designed to ensure that:

(i) The asset management decisions of the UBS QPAM are conducted independently of UBS's corporate management and business activities, including the corporate management and business activities of the Investment Bank division, UBS Securities Japan, and UBS France. This condition does not preclude a UBS QPAM from receiving publicly available research and other widely available information from a UBS affiliate;

(ii) The UBS QPAM fully complies with ERISA's fiduciary duties, and with ERISA and the Code's prohibited transaction provisions, in each case as applicable with respect to each Covered Plan, and does not knowingly participate in any violation of these duties and provisions with respect to Covered Plans;

(iii) The UBS QPAM does not knowingly participate in any other person's violation of ERISA or the Code with respect to Covered Plans;

(iv) Any filings or statements made by the UBS QPAM to regulators, including, but not limited to, the Department, the Department of the Treasury, the Department of Justice, and the Pension Benefit Guaranty Corporation, on behalf of or in relation to Covered Plans, are materially accurate and complete, to the best of such QPAM's knowledge at that time;

(v) To the best of the UBS QPAM's knowledge at that time, the UBS QPAM does not make material misrepresentations or omit material information in its communications with such regulators with respect to Covered Plans, or make material misrepresentations or omit material information in its communications with Covered Plans; and

(vi) The UBS QPAM complies with the terms of this five-year exemption;

(2) Any violation of, or failure to comply with an item in subparagraphs (h)(1)(ii) through (vi), is corrected as soon as reasonably possible upon discovery, or as soon after the QPAM reasonably should have known of the noncompliance (whichever is earlier), and any such violation or compliance failure not so corrected is reported, upon the discovery of such failure to so correct, in writing. Such report shall be made to the head of compliance and the General Counsel (or their functional equivalent) of the relevant UBS QPAM that engaged in the violation or failure, and the independent auditor responsible for reviewing compliance with the Policies. A UBS QPAM will not be treated as having failed to develop, implement, maintain, or follow the Policies, provided that it corrects any instance of noncompliance as soon as reasonably possible upon discovery, or as soon as reasonably possible after the UBS QPAM reasonably should have known of the noncompliance (whichever is earlier), and provided that it adheres to the reporting requirements set forth in this subparagraph (2);

(3) Each UBS QPAM will maintain, adjust (to the extent necessary) and implement a program of training during the Exemption Period, to be conducted at least annually, for all relevant UBS QPAM asset/portfolio management, trading, legal, compliance, and internal audit personnel. The Training must:

(i) At a minimum, cover the Policies, ERISA and Code compliance (including applicable fiduciary duties and the prohibited transaction provisions), ethical conduct, the consequences for not complying with the conditions of this exemption (including any loss of exemptive relief provided herein), and prompt reporting of wrongdoing; and

(ii) Be conducted by a professional who has been prudently selected and who has appropriate technical training and proficiency with ERISA and the Code;

(i)(1) Each UBS QPAM submits to an audit conducted by an independent auditor, who has been prudently selected and who has appropriate technical training and proficiency with ERISA and the Code, to evaluate the adequacy of, and each UBS QPAM's compliance with, the Policies and Training described herein. The audit requirement must be incorporated in the Policies. The initial audit must cover the thirteen (13) month period that begins on February 20, 2020 and ends on March 19, 2021, and must be completed by September 19, 2021. The second audit must cover the period March 20, 2021 through March 19, 2022 and must be completed by September 19, 2022. The third audit must cover the period March 20, 2022 through March 19, 2023 and must be completed by September 19, 2023. The fourth audit must cover the period March 20, 2023 through March 19, 2024 and must be completed by September 19, 2024. The fifth audit must cover the period March 20, 2024 through February 20, 2025 and must be completed by August 20, 2025. The corresponding certified Audit Reports must be submitted to the Department no later than 45 days following the completion of the audit; [27] For time periods ending prior to February 20, 2020, and covered by the audit required pursuant to PTE 2017–07 [28] and PTE 2019–01,[29] the audit requirements in Section I(i) of PTE 2017–07 and PTE 2019–01 will remain in effect.[30]

(2) Within the scope of the audit and to the extent necessary for the auditor, in its sole opinion, to complete its audit and comply with the conditions for relief described herein, and only to the extent such disclosure is not prevented by state or federal statute, or involves communications subject to attorney client privilege, each UBS QPAM and, if applicable, UBS, will grant the auditor unconditional access to its business, including, but not limited to: Its computer systems; business records; transactional data; workplace locations; training materials; and personnel. Such access is limited to information relevant to the auditor's objectives as specified by the terms of this exemption;

(3) The auditor's engagement must specifically require the auditor to determine whether each UBS QPAM has developed, implemented, maintained, and followed the Policies in accordance with the conditions of this five-year exemption, and has developed and implemented the Training, as required herein;

(4) The auditor's engagement must specifically require the auditor to test each UBS QPAM's operational compliance with the Policies and Training. In this regard, the auditor must test, for each UBS QPAM, a sample of such UBS QPAM's transactions involving Covered Plans, sufficient in size and nature to afford the auditor a reasonable basis to determine such UBS QPAM's operational compliance with the Policies and Training;

[27] The initial Audit Report must be submitted to the Department by November 3, 2021. The second Audit Report must be submitted to the Department by November 3, 2022. The third Audit Report must be submitted to the Department by November 3, 2023. The fourth Audit Report must be submitted to the Department by November 3, 2024. The fifth Audit Report must be submitted to the Department by October 4, 2025.

[28] 82 FR 61903 (December 29, 2017). PTE 2017–07 is an exemption that permits UBS QPAMs to rely on the exemptive relief provided by PTE 84–14, notwithstanding the 2013 and 2018 Convictions.

[29] 84 FR 6163 (February 26, 2019. PTE 2019–01 is an exemption that permits the UBS QPAMs to rely on the exemptive relief provided by PTE 84–14 notwithstanding the 2013 and 2018 Convictions and the 2019 French Conviction.

[30] Accordingly, pursuant to PTE 2019–01, the final audit under PTE 2017–07 will cover the period beginning on January 10, 2018 and ending on February 19, 2019, and the corresponding Audit Report must be completed by August 19, 2019 and the Audit Report submitted to the Department by October 3, 2019. Likewise, the audit required under PTE 2019–01 must cover the period cover the period beginning February 20, 2019 and ending on February 19, 2020. The corresponding Audit Report must be completed by August 19, 2020 and submitted to the Department by October 3, 2020.

(5) For the audit, on or before the end of the relevant period described in Section I(i)(1) for completing the audit, the auditor must issue a written report (the Audit Report) to UBS and the UBS QPAM to which the audit applies that describes the procedures performed by the auditor in connection with its examination. The auditor, at its discretion, may issue a single consolidated Audit Report that covers all the UBS QPAMs. The Audit Report must include the auditor's specific determinations regarding:

(i) The adequacy of each UBS QPAM's Policies and Training; each UBS QPAM's compliance with the Policies and Training; the need, if any, to strengthen such Policies and Training; and any instance of the respective UBS QPAM's noncompliance with the written Policies and Training described in Section I(h) above. The UBS QPAM must promptly address any noncompliance. The UBS QPAM must promptly address or prepare a written plan of action to address any determination as to the adequacy of the Policies and Training and the auditor's recommendations (if any) with respect to strengthening the Policies and Training of the respective UBS QPAM. Any action taken or the plan of action to be taken by the respective UBS QPAM must be included in an addendum to the Audit Report (such addendum must be completed prior to the certification described in Section I(i)(7) below). In the event such a plan of action to address the auditor's recommendation regarding the adequacy of the Policies and Training is not completed by the time of submission of the Audit Report, the following period's Audit Report must state whether the plan was satisfactorily completed. Any determination by the auditor that a UBS QPAM has implemented, maintained, and followed sufficient Policies and Training must not be based solely or in substantial part on an absence of evidence indicating noncompliance. In this last regard, any finding that a UBS QPAM has complied with the requirements under this subparagraph must be based on evidence that the particular UBS QPAM has actually implemented, maintained, and followed the Policies and Training required by this exemption. Furthermore, the auditor must not solely rely on the Exemption Report created by the compliance officer (the Compliance Officer), as described in Section I(m) below, as the basis for the auditor's conclusions in lieu of independent determinations and testing performed by the auditor as required by Section I(i)(3) and (4) above; and

(ii) The adequacy of the Exemption Review described in Section I(m);

(6) The auditor must notify the respective UBS QPAM of any instance of noncompliance identified by the auditor within five (5) business days after such noncompliance is identified by the auditor, regardless of whether the audit has been completed as of that date;

(7) With respect to the Audit Report, the General Counsel, or one of the three most senior executive officers of the UBS QPAM to which the Audit Report applies, must certify in writing, under penalty of perjury, that the officer has reviewed the Audit Report and this exemption; that, to the best of such officer's knowledge at the time, such UBS QPAM has addressed, corrected, remedied any noncompliance and inadequacy or has an appropriate written plan to address any inadequacy regarding the Policies and Training identified in the Audit Report. Such certification must also include the signatory's determination, that, to the best of such officer's knowledge at the time, the Policies and Training in effect at the time of signing are adequate to ensure compliance with the conditions of this exemption and with the applicable provisions of ERISA and the Code;

(8) The Risk Committee of UBS's Board of Directors is provided a copy of the Audit Report; and a senior executive officer of UBS's Compliance and Operational Risk Control function must review the Audit Report for each UBS QPAM and must certify in writing, under penalty of perjury, that such officer has reviewed the Audit Report;

(9) Each UBS QPAM provides its certified Audit Report, by regular mail to: Office of Exemption Determinations (OED), 200 Constitution Avenue NW, Suite 400, Washington, DC 20210; or by private carrier to: 122 C Street NW, Suite 400, Washington, DC 20001–2109. This delivery must take place no later than 45 days following completion of the Audit Report. The Audit Reports will be made part of the public record regarding this five-year exemption. Furthermore, each UBS QPAM must make its Audit Reports unconditionally available, electronically or otherwise, for examination upon request by any duly authorized employee or representative of the Department, other relevant regulators, and any fiduciary of a Covered Plan;

(10) Any engagement agreement with an auditor to perform the audit required by this exemption that is entered into subsequent to the effective date of this exemption must be submitted to OED no later than two (2) months after the execution of such agreement;

(11) The auditor must provide the Department, upon request, for inspection and review, access to all the workpapers created and used in connection with the audit, provided such access and inspection is otherwise permitted by law; and

(12) UBS must notify the Department of a change in the independent auditor no later than two (2) months after the engagement of a substitute or subsequent auditor and must provide an explanation for the substitution or change including a description of any material disputes between the terminated auditor and UBS;

(j) As of the effective date of this five-year exemption, with respect to any arrangement, agreement, or contract between a UBS QPAM and a Covered Plan, the UBS QPAM agrees and warrants to Covered Plans:

(1) To comply with ERISA and the Code, as applicable with respect to such Covered Plan; to refrain from engaging in prohibited transactions that are not otherwise exempt (and to promptly correct any inadvertent prohibited transactions); and to comply with the standards of prudence and loyalty set forth in section 404 of ERISA with respect to each such ERISA-covered plan and IRA to the extent that section 404 is applicable;

(2) To indemnify and hold harmless the Covered Plan for any actual losses resulting directly from: a UBS QPAM's violation of ERISA's fiduciary duties, as applicable, and of the prohibited transaction provisions of ERISA and the Code, as applicable; a breach of contract by the QPAM; or any claim arising out of the failure of such UBS QPAM to qualify for the exemptive relief provided by PTE 84–14 as a result of a violation of Section I(g) of PTE 84–14 other than the Convictions and the 2019 French Conviction. This condition applies only to actual losses caused by the UBS QPAM's violations.

(3) Not to require (or otherwise cause) the Covered Plan to waive, limit, or qualify the liability of the UBS QPAM for violating ERISA or the Code or engaging in prohibited transactions;

(4) Not to restrict the ability of such Covered Plan to terminate or withdraw from its arrangement with the UBS QPAM with respect to any investment in a separately managed account or pooled fund subject to ERISA and managed by such QPAM, with the exception of reasonable restrictions, appropriately disclosed in advance, that are specifically designed to ensure equitable treatment of all investors in a

pooled fund in the event such withdrawal or termination may have adverse consequences for all other investors. In connection with any such arrangements involving investments in pooled funds subject to ERISA entered into after the effective date of PTE 2017–07, the adverse consequences must relate to a lack of liquidity of the underlying assets, valuation issues, or regulatory reasons that prevent the fund from promptly redeeming an ERISA-covered plan's or IRA's investment, and such restrictions must be applicable to all such investors and be effective no longer than reasonably necessary to avoid the adverse consequences;

(5) Not to impose any fees, penalties, or charges for such termination or withdrawal with the exception of reasonable fees, appropriately disclosed in advance, that are specifically designed to prevent generally recognized abusive investment practices or specifically designed to ensure equitable treatment of all investors in a pooled fund in the event such withdrawal or termination may have adverse consequences for all other investors, provided that such fees are applied consistently and in a like manner to all such investors; and

(6) Not to include exculpatory provisions disclaiming or otherwise limiting liability of the UBS QPAM for a violation of such agreement's terms. To the extent consistent with Section 410 of ERISA, however, this provision does not prohibit disclaimers for liability caused by an error, misrepresentation, or misconduct of a plan fiduciary or other party hired by the plan fiduciary who is independent of UBS and its affiliates, or damages arising from acts outside the control of the UBS QPAM;

(7) For Covered Plans that enter into a written asset or investment management agreement with a UBS QPAM on or after the effective date of this exemption, the UBS QPAM will agree to its obligations under this Section I(j) in an updated investment management agreement between the UBS QPAM and such clients or other written contractual agreement. This condition will be deemed met for each Covered Plan that received a notice pursuant to PTE 2016–17, PTE 2017–07, and/or PTE 2019–01 that meets the terms of this condition. Notwithstanding the above, a UBS QPAM will not violate the condition solely because a Plan or IRA refuses to sign an updated investment management agreement.

(k) Each UBS QPAM will provide a notice of the proposed exemption, along with a separate summary describing the facts that led to the Convictions and the 2019 French Conviction (the Summary), which have been submitted to the Department, and a prominently displayed statement (the Statement) that the Convictions and, in the Department's view, the 2019 French Conviction, each separately result in a failure to meet a condition in PTE 84–14 and PTE 2017–07, to each sponsor and beneficial owner of a Covered Plan that entered into a written asset or investment management agreement with a UBS QPAM, or the sponsor of an investment fund in any case where a UBS QPAM acts as a sub-advisor to the investment fund in which such ERISA-covered plan and IRA invests. The notice, Summary and Statement must be provided prior to, or contemporaneously with, the client's receipt of a written asset management agreement from the UBS QPAM. If this five-year exemption is granted, the clients must receive a **Federal Register** copy of the notice of final five-year exemption within sixty (60) days of the effective date of the five year exemption. The notice may be delivered electronically (including by an email that has a link to the five-year exemption);

(l) The UBS QPAMs must comply with each condition of PTE 84–14, as amended, with the sole exception of the violations of Section I(g) of PTE 84–14 that are attributable to the Convictions and the 2019 French Conviction. If, during the Exemption Period, an entity within the UBS corporate structure is convicted of a crime described in Section I(g) of PTE 84–14, (other than the 2013 Conviction, 2018 Conviction, and the 2019 French Conviction), relief in this exemption would terminate immediately;

(m)(1) UBS continues to designate a senior compliance officer (the Compliance Officer) who will be responsible for compliance with the Policies and Training requirements described herein. The Compliance Officer must conduct an annual review during the Exemption Period (the Exemption Review), to determine the adequacy and effectiveness of the implementation of the Policies and Training. With respect to the Compliance Officer, the following conditions must be met:

(i) The Compliance Officer must be a professional who has extensive experience with, and knowledge of, the regulation of financial services and products, including under ERISA and the Code; and

(ii) The Compliance Officer must have a reporting line within UBS's Compliance and Operational Risk Control (C&ORC) function to the Head of Compliance and Operational Risk Control, Asset Management. The C&ORC function is organizationally independent of UBS's business divisions-including Asset Management, the Investment Bank, and Global Wealth Management-and is led by the head of Group Compliance, Regulatory and Governance, or another appropriate member of the Group Executive Board;

(2) With respect to the Exemption Review, the following conditions must be met:

(i) The Exemption Review includes a review of the UBS QPAMs' compliance with and effectiveness of the Policies and Training and of the following: Any compliance matter related to the Policies or Training that was identified by, or reported to, the Compliance Officer or others within the C&ORC function during the previous year; the most recent Audit Report issued pursuant to this exemption or PTE 2019–01; any material change in the relevant business activities of the UBS QPAMs; and any change to ERISA, the Code, or regulations related to fiduciary duties and the prohibited transaction provisions that may be applicable to the activities of the UBS QPAMs;

(ii) The Compliance Officer prepares a written report for the Exemption Review (an Exemption Report) that (A) summarizes his or her material activities during the Exemption Period; (B) sets forth any instance of noncompliance discovered during the Exemption Period, and any related corrective action; (C) details any change to the Policies or Training to guard against any similar instance of noncompliance occurring again; and (D) makes recommendations, as necessary, for additional training, procedures, monitoring, or additional and/or changed processes or systems, and management's actions on such recommendations;

(iii) In the Exemption Report, the Compliance Officer must certify in writing that to the best of his or her knowledge at the time: (A) The report is accurate; (B) the Policies and Training are working in a manner which is reasonably designed to ensure that the Policies and Training requirements described herein are met; (C) any known instance of noncompliance during the Exemption Period and any related correction taken to date have been identified in the Exemption Report; and (D) the UBS QPAMs have complied with the Policies and Training, and/or corrected (or are correcting) any known instances of noncompliance in accordance with Section I(h) above;

(iv) The Exemption Report must be provided to appropriate corporate officers of UBS and each UBS QPAM to which such report relates, and to the head of compliance and the General Counsel (or their functional equivalent) of the relevant UBS QPAM; and the report must be made unconditionally available to the independent auditor described in Section I(i) above;

(v) The first Exemption Review, including the Compliance Officer's written Exemption Report, must cover the thirteen month period beginning on February 20, 2020 and ending on March 19, 2021, and must be completed by June 19, 2021. The second Exemption Review and Exemption Report must cover the period beginning on March 20, 2021 and ending on March 19, 2022, and must be completed by June 19, 2022. The third Exemption Review and Exemption Report must cover the period beginning on March 20, 2022 and ending on March 19, 2023, and must be completed by June 19, 2023. The fourth Exemption Review and Exemption Report must cover the period beginning on March 20, 2023 and ending on March 19, 2024, and must be completed by June 19, 2024. The fifth Exemption Review and Exemption Report must cover the period beginning on March 20, 2024 and ending on February 20, 2025, and must be completed by May 20, 2025. The Exemption review undertaken pursuant to PTE 2019–01 must cover the period February 20, 2019 through February 19, 2020 and be completed by May 19, 2020; [31]

(n) UBS imposes its internal procedures, controls, and protocols on UBS Securities Japan to: (1) Reduce the likelihood of any recurrence of conduct that is the subject of the 2013 Conviction, and (2) comply in all material respects with the Business Improvement Order, dated December 16, 2011, issued by the Japanese Financial Services Authority;

(o) UBS complies in all material respects with the audit and monitoring procedures imposed on UBS by the U.S. Commodity Futures Trading Commission Order, dated December 19, 2012;

(p) Each UBS QPAM will maintain records necessary to demonstrate that the conditions of this exemption have been met, for six (6) years following the date of any transaction for which such UBS QPAM relies upon the relief in the exemption;

(q) During the Exemption Period, UBS must: (1) Immediately disclose to the Department any Deferred Prosecution Agreement (a DPA) or Non-Prosecution Agreement (an NPA) with the U.S. Department of Justice, entered into by UBS or any of its affiliates (as defined in Section VI(d) of PTE 84–14) in connection with conduct described in Section I(g) of PTE 84–14 or section 411 of ERISA; and (2) immediately provides the Department any information requested by the Department, as permitted by law, regarding the agreement and/or conduct and allegations that led to the agreement;

(r) Each UBS QPAM, in its agreements with, or in other written disclosures provided to Covered Plans, will clearly and prominently inform Covered Plan clients of their right to obtain a copy of the Policies or a description (Summary Policies) which accurately summarizes key components of the UBS QPAM's written Policies developed in connection with this exemption. If the Policies are thereafter changed, each Covered Plan client must receive a new disclosure within six (6) months following the end of the calendar year during which the Policies were changed.[32] With respect to this requirement, the description may be continuously maintained on a website, provided that such website link to the Policies or Summary Policies is clearly and prominently disclosed to each Covered Plan; and

(s) A UBS QPAM will not fail to meet the terms of this exemption, solely because a different UBS QPAM fails to satisfy a condition for relief described in Sections I(c), (d), (h), (i), (j), (k), (l), (p), or (r); or if the independent auditor described in Section I(i) fails a provision of the exemption other than the requirement described in Section I(i)(11), provided that such failure did not result from any actions or inactions of UBS or its affiliates.

Section II. Definitions

(a) The term ''Convictions'' means the 2013 Conviction and the 2018 Conviction. The term ''2013 Conviction'' means the judgment of conviction against UBS Securities Japan Co. Ltd. in case number 3:12–cr–00268–RNC in the U.S. District Court for the District of Connecticut for one count of wire fraud in violation of Title 18, United States Code, sections 1343 and 2 in connection with submission of YEN London Interbank Offered Rates and other benchmark interest rates. The term ''2018 Conviction'' means the judgment of conviction against UBS in case number 3:15–cr–00076–RNC in the U.S. District Court for the District of Connecticut for one count of wire fraud in violation of Title 18, United States Code, Sections 1343 and 2 in connection with UBS's submission of Yen London Interbank Offered Rates and other benchmark interest rates between 2001 and 2010. For all purposes under this exemption, ''conduct'' of any person or entity that is the ''subject of the Convictions'' encompasses any conduct of UBS and/or their personnel, that is described in (i) Exhibit 3 to the Plea Agreement entered into between UBS and the Department of Justice Criminal Division, on May 20, 2015, in connection with case number 3:15–cr–00076–RNC, and (ii) Exhibits 3 and 4 to the Plea Agreement entered into between UBS Securities Japan and the Department of Justice Criminal Division, on December 19, 2012, in connection with case number 3:12–cr–00268–RNC;

(b) The term ''2019 French Conviction'' means the adverse judgment on February 20, 2019 against UBS and UBS France in case Number 1105592033 in the French First Instance Court. For all purposes under this exemption, ''conduct'' of any person or entity that is the ''criminal conduct that is the subject of the 2019 French Conviction'', includes any conduct of UBS, its affiliates, or UBS France and/or their personnel that is described in any such judgment;

(c) The term ''Covered Plan'' means a plan subject to Part IV of Title I of ERISA (an ''ERISA-covered plan'') or a plan subject to section 4975 of the Code (an ''IRA''), in each case, with respect to which a UBS QPAM relies on PTE 84–14, or with respect to which a UBS QPAM (or any UBS affiliate) has expressly represented that the manager qualifies as a QPAM or relies on the QPAM class exemption (PTE 84–14). A Covered Plan does not include an ERISA-covered plan or IRA to the extent the UBS QPAM has expressly disclaimed reliance on QPAM status or PTE 84–14 in entering into a contract, arrangement, or agreement with the ERISA-covered plan or IRA.

(d) The term ''FX Misconduct'' means the conduct engaged in by UBS personnel described in Exhibit 1 of the Plea Agreement (Factual Basis for Breach) entered into between UBS and the Department of Justice Criminal Division, on May 20, 2015 in connection with Case Number 3:15–cr–00076–RNC filed in the US District Court for the District of Connecticut.

[31] All Exemption Reviews for periods prior to the effective date of this exemption must be conducted and completed pursuant to the requirements of PTE 2017–07 or PTE 2019–01, as applicable.

[32] In the event the Applicant meets this disclosure requirement through Summary Policies, changes to the Policies shall not result in the requirement for a new disclosure unless, as a result of changes to the Policies, the Summary Policies are no longer accurate.

(e) The term ''UBS QPAM'' means UBS Asset Management (Americas) Inc., UBS Realty Investors LLC, UBS Hedge Fund Solutions LLC, UBS O'Connor LLC, and any future entity within the Asset Management or the Global Wealth Management Americas U.S. divisions of UBS that qualifies as a ''qualified professional asset manager'' (as defined in Section VI(a) of PTE 84–14) [33] and that relies on the relief provided by PTE 84–14, and with respect to which UBS is an ''affiliate'' (as defined in Part VI(d) of PTE 84–14). The term ''UBS QPAM'' excludes UBS securities Japan, the entity implicated in the criminal conduct that is the subject of the 2013 Conviction, UBS, the entity implicated in the criminal conduct that is the subject of the 2018 Conviction and implicated in the criminal conduct of UBS and UBS France that is the subject of the 2019 French Conviction and UBS France, the entity implicated in the criminal conduct of UBS and UBS France that is the subject of the 2019 French Conviction.

(f) The term ''UBS'' means UBS AG.

(g) The term ''UBS France'' means ''UBS (France) S.A.,'' a wholly-owned subsidiary of UBS incorporated under the laws of France.

(h) The term ''UBS Securities Japan'' means UBS Securities Japan Co. Ltd, a wholly-owned subsidiary of UBS incorporated under the laws of Japan.

(i) All references to ''the 2019 French Conviction Date'' means February 20, 2019;

(j) The term ''Exemption Period'' means the five year period beginning on February 20, 2020 and ending on February 20, 2025;

(k) The term ''Plea Agreement'' means the Plea Agreement (including Exhibits 1 and 3 attached thereto) entered into between UBS and the Department of Justice Criminal Division, on May 20, 2015 in connection with Case Number 3:15–cr–00076–RNC filed in the US District Court for the District of Connecticut.

Effective Date: This exemption will be in effect for a period of five years beginning on February 20, 2020.

[33] In general terms, a QPAM is an independent fiduciary that is a bank, savings and loan association, insurance company, or investment adviser that meets certain equity or net worth requirements and other licensure requirements and that has acknowledged in a written management agreement that it is a fiduciary with respect to each plan that has retained the QPAM.

Signed at Washington, DC, this 25th day of September, 2019.

Lyssa Hall,

Director, Office of Exemption Determinations, Employee Benefits Security Administration, U.S. Department Of Labor.

[FR Doc. 2019–21124 Filed 9–27–19; 8:45 am]

BILLING CODE 4510–29–P

DEPARTMENT OF LABOR

Employment And Training Administration

Agency Information Collection Activities; Comment Request; Registered Apprenticeship College Consortium

ACTION: Notice.

SUMMARY: The Department of Labor's (DOL's) Employment and Training Administration (ETA) is soliciting comments concerning a proposed extension for the authority to conduct the information collection request (ICR) titled, ''Registered Apprenticeship College Consortium.'' This comment request is part of continuing Departmental efforts to reduce paperwork and respondent burden in accordance with the Paperwork Reduction Act of 1995 (PRA).

DATES: Consideration will be given to all written comments received by November 29, 2019.

ADDRESSES: A copy of this ICR with applicable supporting documentation, including a description of the likely respondents, proposed frequency of response, and estimated total burden, may be obtained free by contacting Randy Copeland by telephone at 202–693–3776 (this is not a toll-free number), TTY 1–877–889–5627 (this is not a toll-free number), or by email at *Apprenticeship@dol.gov.*

Submit written comments about, or requests for a copy of, this ICR by mail or courier to the U.S. Department of Labor, Employment and Training Administration, Office of Apprenticeship, Room C–5321, 200 Constitution Avenue NW, Washington, DC 20210; by email: *Apprenticeship@dol.gov;* or by Fax 202–693–3799.

FOR FURTHER INFORMATION CONTACT: Randy Copeland by telephone at 202–693–3776 (this is not a toll-free number) or by email at *Apprenticeship@dol.gov.*

SUPPLEMENTARY INFORMATION: DOL, as part of continuing efforts to reduce paperwork and respondent burden, conducts a pre-clearance consultation program to provide the general public and Federal agencies an opportunity to comment on proposed and/or continuing collections of information before submitting them to the Office of Management and Budget (OMB) for final approval. This program helps to ensure requested data can be provided in the desired format, reporting burden (time and financial resources) is minimized, collection instruments are clearly understood, and the impact of collection requirements can be properly assessed.

The data collection includes three application forms to establish membership in the Registered Apprenticeship College Consortium. The three types of membership are: Two- and four-year post-secondary institutions, Registered Apprenticeship sponsors, and organizations and associations that represent institutions or sponsors on a national, regional or state level and serve in a coordinating role to facilitate membership in the consortium. At the September 2011 meeting of the Secretary's Advisory Committee on Apprenticeship (ACA) a unanimous proposal was adopted to form a national consortium based on the Service members Opportunity Colleges Consortium (SOC) model, which is a consortium of colleges that provides college articulation for soldiers and veterans who accumulate credits at a number of colleges. The SOC is supported by the Department of Defense. The ACA also adopted the Registered Apprenticeship College Consortium Articulation Framework which outlines the goals of the consortium, the principles that guide the effort, conditions of membership, and criteria. The National Apprenticeship Act of 1937, Section 50 (29 U.S.C. 50), authorizes this information collection.

This information collection is subject to the PRA. A Federal agency generally cannot conduct or sponsor a collection of information, and the public is generally not required to respond to an information collection, unless it is approved by OMB under the PRA and displays a currently valid OMB Control Number. In addition, notwithstanding any other provisions of law, no person shall generally be subject to penalty for failing to comply with a collection of information that does not display a valid Control Number. See 5 CFR 1320.5(a) and 1320.6.

Interested parties are encouraged to provide comments to the contact shown in the **ADDRESSES** section. Comments must be written to receive consideration, and they will be summarized and included in the request for OMB approval of the final ICR. In order to help ensure appropriate consideration, comments should

mention OMB Control Number 1205–0512.

Submitted comments will also be a matter of public record for this ICR and posted on the internet, without redaction. DOL encourages commenters not to include personally identifiable information, confidential business data, or other sensitive statements/information in any comments.

DOL is particularly interested in comments that:

- Evaluate whether the proposed collection of information is necessary for the proper performance of the functions of the agency, including whether the information will have practical utility;
- Evaluate the accuracy of the agency's estimate of the burden of the proposed collection of information, including the validity of the methodology and assumptions used;
- Enhance the quality, utility, and clarity of the information to be collected; and
- Minimize the burden of the collection of information on those who are to respond, including through the use of appropriate automated, electronic, mechanical, or other technological collection techniques or other forms of information technology, (*e.g.,* permitting electronic submission of responses).

Agency: DOL–ETA.

Type of Review: Extension without changes.

Title of Collection: Registered Apprenticeship College Consortium.

Form: Two- and Four-Year Post-Secondary Institutions—Articulation agreement, Two- and Four-Year Post-Secondary Institutions—RACC Application & File Transfer, Registered Apprenticeship Sponsor—RACC Application, Associations and Other Organizations—RACC Application, Two- and Four-Year Post- Secondary Institutions—RACC Applications, Two- and Four-Year Post- Secondary Institutions—Articulation Agreement Review, Registered Apprenticeship Sponsor—Articulation Agreement Review, Associations and Other Organizations — Articulation Agreement Review.

OMB Control Number: 1205–0512.

Affected Public: Federal Government; State, Local, and Tribal Governments; and Private Sector—Businesses or other for-profit and not-for profit institutions.

Estimated Number of Respondents: 500.

Frequency: Bi-annual.

Total Estimated Annual Responses: 166.6 per year or 500 over three years.

Estimated Average Time per Response: 10 minutes.

Estimated Total Annual Burden Hours: 58 hours.

Total Estimated Annual Other Cost Burden: $0.

Authority: 44 U.S.C. 3506(c)(2)(A).

John Pallasch,

Assistant Secretary for Employment and Training.

[FR Doc. 2019–21182 Filed 9–27–19; 8:45 am]

BILLING CODE 4510–FR–P

DEPARTMENT OF LABOR

Office of the Secretary

Agency Information Collection Activities; Submission for OMB Review; Comment Request; Cleanup Program for Accumulations of Coal and Float Coal Dusts, Loose Coal, and Other Combustibles

ACTION: Notice of availability; request for comments.

SUMMARY: The Department of Labor (DOL) is submitting the Mine Safety and Health Administration (MSHA) sponsored information collection request (ICR) titled, ''Cleanup Program for Accumulations of Coal and Float Coal Dusts, Loose Coal, and Other Combustibles,'' to the Office of Management and Budget (OMB) for review and approval for continued use, without change, in accordance with the Paperwork Reduction Act of 1995 (PRA). Public comments on the ICR are invited.

DATES: The OMB will consider all written comments that agency receives on or before October 30, 2019.

ADDRESSES: A copy of this ICR with applicable supporting documentation; including a description of the likely respondents, proposed frequency of response, and estimated total burden may be obtained free of charge from the *RegInfo.gov* website at *http://www.reginfo.gov/public/do/PRAViewICR?ref_nbr=201905-1219-005* (this link will only become active on the day following publication of this notice) or by contacting Frederick Licari by telephone at 202–693–8073, TTY 202–693–8064, (these are not toll-free numbers) or by email at *DOL_PRA_PUBLIC@dol.gov.*

Submit comments about this request by mail to the Office of Information and Regulatory Affairs, Attn: OMB Desk Officer for DOL–MSHA, Office of Management and Budget, Room 10235, 725 17th Street NW, Washington, DC 20503; by Fax: 202–395–5806 (this is not a toll-free number); or by email: *OIRA_submission@omb.eop.gov.* Commenters are encouraged, but not required, to send a courtesy copy of any comments by mail or courier to the U.S. Department of Labor-OASAM, Office of the Chief Information Officer, Attn: Departmental Information Compliance Management Program, Room N1301, 200 Constitution Avenue NW, Washington, DC 20210; or by email: *DOL_PRA_PUBLIC@dol.gov.*

FOR FURTHER INFORMATION CONTACT: Frederick Licari by telephone at 202–693–8073, TTY 202–693–8064, (these are not toll-free numbers) or by email at *DOL_PRA_PUBLIC@dol.gov.*

SUPPLEMENTARY INFORMATION: This ICR seeks to extend PRA authority for the Cleanup Program for Accumulations of Coal and Float Coal Dusts, Loose Coal, and Other Combustibles information collection. The information collection requirements codified in regulations 30 CFR 75.400–2 requires a mine operator to establish and to maintain a program for the regular cleanup and removal of accumulations of coal and float coal dusts, loose coal, and other combustibles. A mine operator must have a written cleanup program that is maintained in the underground mine file at the appropriate MSHA District Office for each mine. This cleanup program is used as a tool to help abate significant or persistent problems by including cleanup program revisions to address hazards detected in the mine. Federal Mine Safety and Health Act of 1977 sections 101(a) and 103(h) authorizes this information collection. *See* 30 U.S.C. 811(a) and U.S.C. 813(h).

This information collection is subject to the PRA. A Federal agency generally cannot conduct or sponsor a collection of information, and the public is generally not required to respond to an information collection, unless the OMB under the PRA approves it and displays a currently valid OMB Control Number. In addition, notwithstanding any other provisions of law, no person shall generally be subject to penalty for failing to comply with a collection of information that does not display a valid Control Number. *See* 5 CFR 1320.5(a) and 1320.6. The DOL obtains OMB approval for this information collection under Control Number 1219–0151.

OMB authorization for an ICR cannot be for more than three (3) years without renewal, and the current approval for this collection is scheduled to expire on September 30, 2019. The DOL seeks to extend PRA authorization for this information collection for three (3) more years, without any change to existing requirements. The DOL notes that existing information collection

requirements submitted to the OMB receive a month-to-month extension while they undergo review. For additional substantive information about this ICR, see the related notice published in the **Federal Register** on July 1, 2019 (84 FR 31351).

Interested parties are encouraged to send comments to the OMB, Office of Information and Regulatory Affairs at the address shown in the **ADDRESSES** section within thirty-(30) days of publication of this notice in the **Federal Register**. In order to help ensure appropriate consideration, comments should mention OMB Control Number 1219–0151. The OMB is particularly interested in comments that:

- Evaluate whether the proposed collection of information is necessary for the proper performance of the functions of the agency, including whether the information will have practical utility:
- Evaluate the accuracy of the agency's estimate of the burden of the proposed collection of information, including the validity of the methodology and assumptions used.
- Enhance the quality, utility, and clarity of the information to be collected; and
- Minimize the burden of the collection of information on those who are to respond, including through the use of appropriate automated, electronic, mechanical, or other technological collection techniques or other forms of information technology, *e.g.,* permitting electronic submission of responses.

Agency: DOL–MSHA.

Title of Collection: Cleanup Program for Accumulations of Coal and Float Coal Dusts, Loose Coal, and Other Combustibles.

OMB Control Number: 1219–0151.

Affected Public: Private Sector—businesses or other for-profits and not-for-profit institutions.

Total Estimated Number of Respondents: 183.

Total Estimated Number of Responses: 183.

Total Estimated Annual Time Burden: 281 hours.

Total Estimated Annual Other Costs Burden: $0.

Authority: 44 U.S.C. 3507(a)(1)(D).

Dated: September 18, 2019.

Frederick Licari,

Departmental Clearance Officer.

[FR Doc. 2019–21264 Filed 9–27–19; 8:45 am]

BILLING CODE 4510–43–P

DEPARTMENT OF LABOR

Office of the Secretary

Agency Information Collection Activities; Submission for OMB Review; Comment Request; Coal Mine Dust Sampling Devices

ACTION: Notice of availability; request for comments.

SUMMARY: The Department of Labor (DOL) is submitting the Mine Safety and Health Administration (MSHA) sponsored information collection request (ICR) titled, ''Coal Mine Dust Sampling Devices,'' to the Office of Management and Budget (OMB) for review and approval for continued use, without change, in accordance with the Paperwork Reduction Act of 1995 (PRA). Public comments on the ICR are invited.

DATES: The OMB will consider all written comments that agency receives on or before October 30, 2019.

ADDRESSES: A copy of this ICR with applicable supporting documentation; including a description of the likely respondents, proposed frequency of response, and estimated total burden may be obtained free of charge from the *RegInfo.gov* website at *http://www.reginfo.gov/public/do/PRAViewICR?ref_nbr=201905-1219-004* (this link will only become active on the day following publication of this notice) or by contacting Frederick Licari by telephone at 202–693–8073, TTY 202–693–8064, (these are not toll-free numbers) or by email at *DOL_PRA_PUBLIC@dol.gov.*

Submit comments about this request by mail to the Office of Information and Regulatory Affairs, Attn: OMB Desk Officer for DOL–MSHA, Office of Management and Budget, Room 10235, 725 17th Street NW, Washington, DC 20503; by Fax: 202–395–5806 (this is not a toll-free number); or by email: *OIRA_submission@omb.eop.gov.* Commenters are encouraged, but not required, to send a courtesy copy of any comments by mail or courier to the U.S. Department of Labor–OASAM, Office of the Chief Information Officer, Attn: Departmental Information Compliance Management Program, Room N1301, 200 Constitution Avenue NW, Washington, DC 20210; or by email: *DOL_PRA_PUBLIC@dol.gov.*

FOR FURTHER INFORMATION CONTACT: Frederick Licari by telephone at 202–693–8073, TTY 202–693–8064, (these are not toll-free numbers) or by email at *DOL_PRA_PUBLIC@dol.gov.*

SUPPLEMENTARY INFORMATION: This ICR seeks to extend PRA authority for the Coal Mine Dust Sampling Devices information collection requirements codified in regulations 30 CFR 74.7, 74.8, 74.11, 74.16, and 74.16. Continuous Personal Dust Monitors (CPDMs) determine the concentration of respirable dust in coal mines. CPDMs must be designed and constructed for coal miners to wear and operate without impeding their ability to perform their work safely and effectively. CPDMs must also be durable to perform reliably in normal working conditions of coal mines. Paperwork requirements imposed on applicants are related to the application process and CPDM testing procedures. Federal Mine Safety and Health Act of 1977 sections 101(a) and 103(h) authorize this information collection. *See* 30 U.S.C. 811(a), 813(h).

This information collection is subject to the PRA. A Federal agency generally cannot conduct or sponsor a collection of information, and the public is generally not required to respond to an information collection, unless the OMB under the PRA approves it and displays a currently valid OMB Control Number. In addition, notwithstanding any other provisions of law, no person shall generally be subject to penalty for failing to comply with a collection of information that does not display a valid Control Number. *See* 5 CFR 1320.5(a) and 1320.6. The DOL obtains OMB approval for this information collection under Control Number 1219–0147.

OMB authorization for an ICR cannot be for more than three (3) years without renewal, and the current approval for this collection is scheduled to expire on September 30, 2019. The DOL seeks to extend PRA authorization for this information collection for three (3) more years, without any change to existing requirements. The DOL notes that existing information collection requirements submitted to the OMB receive a month-to-month extension while they undergo review. For additional substantive information about this ICR, see the related notice published in the **Federal Register** on July 31, 2019 (84 FR 37352).

Interested parties are encouraged to send comments to the OMB, Office of Information and Regulatory Affairs at the address shown in the **ADDRESSES** section within thirty-(30) days of publication of this notice in the **Federal Register**. In order to help ensure appropriate consideration, comments should mention OMB Control Number 1219–0147. The OMB is particularly interested in comments that:

- Evaluate whether the proposed collection of information is necessary for the proper performance of the

functions of the agency, including whether the information will have practical utility:

• Evaluate the accuracy of the agency's estimate of the burden of the proposed collection of information, including the validity of the methodology and assumptions used.

• Enhance the quality, utility, and clarity of the information to be collected; and

• Minimize the burden of the collection of information on those who are to respond, including through the use of appropriate automated, electronic, mechanical, or other technological collection techniques or other forms of information technology, *e.g.,* permitting electronic submission of responses.

Agency: DOL–MSHA.

Title of Collection: Coal Mine Dust Sampling Devices.

OMB Control Number: 1219–0147.

Affected Public: Private Sector—Businesses or other for-profits.

Total Estimated Number of Respondents: 1.

Total Estimated Number of Responses: 1.

Total Estimated Annual Time Burden: 41 hours.

Total Estimated Annual Other Costs Burden: $0.

Authority: 44 U.S.C. 3507(a)(1)(D).

Dated: September 10, 2019.

Frederick Licari,

Departmental Clearance Officer.

[FR Doc. 2019–20376 Filed 9–27–19; 8:45 am]

BILLING CODE 4510–43–P

DEPARTMENT OF LABOR

Office of the Secretary

Agency Information Collection Activities; Submission for OMB Review; Comment Request; Employment and Training Administration—Financial Report Form ETA–9130

ACTION: Notice of availability; request for comments.

SUMMARY: The Department of Labor (DOL) is submitting the Employment and Training Administration (ETA) sponsored information collection request (ICR) revision titled, ''Employment and Training Administration—Financial Report Form ETA–9130,'' to the Office of Management and Budget (OMB) for review and approval for use in accordance with the Paperwork Reduction Act (PRA) of 1995. Public comments on the ICR are invited.

DATES: The OMB will consider all written comments that agency receives on or before October 30, 2019.

ADDRESSES: A copy of this ICR with applicable supporting documentation; including a description of the likely respondents, proposed frequency of response, and estimated total burden may be obtained free of charge from the *RegInfo.gov* website at *http://www.reginfo.gov/public/do/PRAViewICR?ref_nbr=201909-1205-006* (this link will only become active on the day following publication of this notice) or by contacting Frederick Licari by telephone at 202–693–8073, TTY 202–693–8064, (these are not toll-free numbers) or sending an email to *DOL_PRA_PUBLIC@dol.gov.*

Submit comments about this request by mail to the Office of Information and Regulatory Affairs, Attn: OMB Desk Officer for DOL–ETA, Office of Management and Budget, Room 10235, 725 17th Street NW, Washington, DC 20503; by Fax: 202–395–5806 (this is not a toll-free number); or by email: *OIRA_submission@omb.eop.gov.* Commenters are encouraged, but not required, to send a courtesy copy of any comments by mail or courier to the U.S. Department of Labor-OASAM, Office of the Chief Information Officer, Attn: Departmental Information Compliance Management Program, Room N1301, 200 Constitution Avenue NW, Washington, DC 20210; or by email: *DOL_PRA_PUBLIC@dol.gov.*

FOR FURTHER INFORMATION CONTACT: Frederick Licari by telephone at 202–693–8073, TTY 202–693–8064, (these are not toll-free numbers) or sending an email to *DOL_PRA_PUBLIC@dol.gov.*

SUPPLEMENTARY INFORMATION: This ICR seeks approval under the PRA for revisions to the Employment and Training Administration—Financial Report Form ETA–9130. The ETA awards approximately $8 billion in formula and discretionary grants each year to an average of 1,000 recipients. Financial reports for each of these grants must be submitted quarterly on the financial reports form ETA–9130. Recipients include but are not limited to: State Employment Security Agencies, which are comprised of three components: Wagner Peyser Employment Service, Unemployment Insurance program, and Trade Program Grant Agreement; and the grantee under the following programs: WIOA Youth, Adult, and Dislocated Worker programs; National Dislocated Worker Grants; National Farmworker Jobs Program; Indian and Native American programs; Senior Community Service Employment Program; WIOA discretionary grants; and H–1B Job Training Grants. This information collection is a revision because ETA proposes adding a new reporting line item entitled, Training Expenditures, to the WIOA Adult, Youth and Dislocated Worker ETA–9130s. The WOIA authorizes this information collection.

This information collection is subject to the PRA. A Federal agency generally cannot conduct or sponsor a collection of information, and the public is generally not required to respond to an information collection, unless the OMB, under the PRA, approves it and displays a currently valid OMB Control Number. In addition, notwithstanding any other provisions of law, no person shall generally be subject to penalty for failing to comply with a collection of information that does not display a valid Control Number. *See* 5 CFR 1320.5(a) and 1320.6. The DOL obtains OMB approval for this information collection under Control Number 1205–0461. The current approval is scheduled to expire on September 30, 2019; however, the DOL notes that existing information collection requirements submitted to the OMB will receive a month-to-month extension while they undergo review. New requirements would only take effect upon OMB approval. For additional substantive information about this ICR, see the related notice published in the **Federal Register** on July 19, 2019 (84 FR 34947).

Interested parties are encouraged to send comments to the OMB, Office of Information and Regulatory Affairs at the address shown in the **ADDRESSES** section within thirty-(30) days of publication of this notice in the **Federal Register**. In order to help ensure appropriate consideration, comments should mention OMB Control Number 1205–0461. The OMB is particularly interested in comments that:

• Evaluate whether the proposed collection of information is necessary for the proper performance of the functions of the agency, including whether the information will have practical utility.

• Evaluate the accuracy of the agency's estimate of the burden of the proposed collection of information, including the validity of the methodology and assumptions used.

• Enhance the quality, utility, and clarity of the information to be collected; and

• Minimize the burden of the collection of information on those who are to respond, including through the use of appropriate automated, electronic, mechanical, or other technological collection techniques or other forms of information technology,

e.g., permitting electronic submission of responses.

Agency: DOL–ETA.

Title of Collection: Employment and Training Administration—Financial Report Form ETA–9130.

OMB Control Number: 1205–0461.

Affected Public: State, Local and Tribal Governments.

Total Estimated Number of Respondents: 1,000.

Total Estimated Number of Responses: 20,000.

Total Estimated Annual Time Burden: 15,000 hours.

Total Estimated Annual Other Costs Burden: $0.

Authority: 44 U.S.C. 3507(a)(1)(D).

Dated: September 23, 2019.

Frederick Licari,

Departmental Clearance Officer.

[FR Doc. 2019–21113 Filed 9–27–19; 8:45 am]

BILLING CODE 4510–FN–P

DEPARTMENT OF LABOR

Occupational Safety and Health Administration

[Docket No. OSHA–2019–0005]

Stakeholder Meeting on Using Leading Indicators To Improve Safety and Health Outcomes

AGENCY: Occupational Safety and Health Administration (OSHA), Labor.

ACTION: Notice of stakeholder meeting.

SUMMARY: OSHA invites interested parties to participate in a stakeholder meeting to share information on their use of leading indicators to improve safety and health outcomes in the workplace. OSHA plans to use the information to create additional tools that may help employers with developing and using leading indicators. Participants are invited to provide responses to the questions included in this notice and share examples of leading indicators that they use to improve safety or health performance in their workplaces. This information can also be submitted to OSHA in writing. The meeting will take place at the Frances Perkins Building (See Address).

DATES: The stakeholder meeting will be held from 1:00 p.m. to 4:30 p.m. ET on November 7, 2019.

ADDRESSES: The meeting will take place in Conference Room N–4437 at the U.S. Department of Labor, 200 Constitution Avenue NW, Washington, DC 20210.

Registration to attend: The deadline for registering to attend the meeting is October 30, 2019. Please register online at: *https://projects.erg.com/conferences/osha/register-osha-leading indicators.htm.* Registration will be available on a first-come, first-served basis.

Public Comments: You are invited to submit comments that address the questions for discussion listed in Section II of this notice. You may submit comments and additional materials electronically or by hard copy until February 7, 2020.

Electronically: You may submit comments and attachments electronically at *http://www.regulations.gov.* Search for Docket No. OSHA–2019–0005, and follow the instructions for making electronic submissions.

Mail, hand delivery, express mail, messenger or courier service: You may submit comments and attachments to the OSHA Docket Office, Docket No. 2019–0005, U.S. Department of Labor, Room N–3508, 200 Constitution Avenue NW, Washington, DC 20210.

Instructions: All submissions must include the agency name and the OSHA docket number for this **Federal Register** notice (Docket No. OSHA–2019–0005). Because of security-related procedures, submissions by regular mail may result in a significant delay in receipt. Please contact the OSHA Docket Office for information about security procedures for making submissions by express mail, hand (courier) delivery, and messenger service.

Requests for special accommodations: Please submit requests for special accommodations for this stakeholder meeting by October 30, 2019, to Ms. Gretta Jameson, OSHA, Office of Communications, Room N–3647, U.S. Department of Labor, 200 Constitution Avenue NW, Washington, DC 20210; telephone: (202) 693–1999; email: *jameson.grettah@dol.gov.*

FOR FURTHER INFORMATION CONTACT:

For press inquiries: Mr. Frank Meilinger, Director, OSHA Office of Communications; telephone: (202) 693–1999; email: *meilinger.francis2@dol.gov.*

For general and technical information about the meeting: Mr. Mark Hagemann, Director, Office of Safety Systems, OSHA, Directorate of Standards and Guidance; telephone: (202) 693–2222; email: *hagemann.mark@dol.gov.*

For copies of this **Federal Register** *notice:* Electronic copies of this **Federal Register** document are available at *http://www.regulations.gov.* This document, as well as news releases and other relevant information, also are available on OSHA's web page at *http://www.osha.gov.*

SUPPLEMENTARY INFORMATION:

I. Background

Many employers track their injury or illness rates using lagging indicators. Lagging indicators are useful because they can alert an employer to a safety and health program failure that may be causing injuries or illnesses. Unfortunately, lagging indicators do not reveal hazards until after an injury or illness occurs. Therefore, employers should also consider using leading indicators. Leading indicators are proactive, preventive, and predictive measures. A good safety and health program uses leading indicators to drive change and lagging indicators to measure effectiveness. The agency has published a guidance document that provides an overview of leading indicators and illustrates a systematic method for using leading indicators.

II. Questions for Consideration

To elicit feedback on these issues, OSHA is requesting comment from interested parties regarding the following questions. Case studies, real world examples, and any data to support the responses is encouraged.

- To what extent are leading indicators used in your workplace?
- Do you use leading indicators as a preventative tool for fixing workplace hazards, or as a tool for improving performance of your safety and health program?
- What leading indicators are most important in your workplace? Why were these indicators chosen?
- How do you determine the effectiveness of your leading indicators? How do you track your leading indicators?
- What leading indicators are, or could be, commonly used in your industry?
- What challenges, if any, have you encountered using leading indicators?
- How many employees are at your facility, and how many are involved in tracking leading indicators?
- How has the use of leading indicators changed the way you manage your safety and health program or other business operations?
- What should OSHA do to encourage employers to use leading indicators in addition to lagging indicators to improve safety management?

III. Meeting Format

The meeting will be a roundtable discussion of the questions posed by OSHA. Participants should focus on answering the questions provided in this notice. OSHA expects this to be a facilitated group discussion. Written comments may be provided to OSHA at

the conclusion of the meeting, or as a follow-up to the meeting.

Authority and Signature

Loren Sweatt, Principal Deputy Assistant Secretary of Labor for Occupational Safety and Health, authorized the preparation of this notice under the authority granted by sections 4, 6, and 8 of the Occupational Safety and Health Act of 1970 (29 U.S.C. 653, 655, 657), and Secretary's Order 1–2012 (77 FR 3912), (Jan. 25, 2012).

Signed at Washington, DC, on September 24, 2019.

Loren Sweatt,

Principal Deputy Assistant Secretary of Labor for Occupational Safety and Health.

[FR Doc. 2019–21111 Filed 9–27–19; 8:45 am]

BILLING CODE 4510–26–P

DEPARTMENT OF LABOR

Veterans' Employment and Training Service

Agency Information Collection Activities; Comment Request: VETS VP/USERRA Complaint Form 1010

AGENCY: Veterans' Employment and Training Service (VETS), Labor.

ACTION: Request for comments.

SUMMARY: The Veterans' Employment and Training Service (VETS) is announcing an opportunity for public comment on a proposed collection of information by the agency. Under the Paperwork Reduction Act (PRA) of 1995, Federal agencies are required to publish notice in the **Federal Register** concerning each proposed collection of information and to allow 60 days for public comment in response to the notice. In this notice, VETS is soliciting comments concerning the proposed information collection request for the VETS USERRA/VP Form 1010.

DATES: Consideration will be given to all written comments received by November 29, 2019.

ADDRESSES: Follow the instructions for submitting comments.

- *Email: 1010-FRN-2019-VETS@dol.gov*. Include ''VETS–1010 Form'' in the subject line of the message.
- *Fax:* (202) 693–4755. Please send comments by fax only if they are 10 pages or less.
- *Mail:* William Coughlin, Investigative Analyst, Compliance and Investigations, VETS, U.S. Department of Labor, Room S–1316, 200 Constitution Avenue NW, Washington, DC 20210.
- Receipt of submissions, whether by U.S. Mail, email, or FAX transmittal, will not be acknowledged; however, the sender may request confirmation that a submission has been received, by telephoning VETS at (202) 693–4715 (VOICE) (this is not a toll-free number) or (202) 693–4760 (TTY/TDD).

All comments received, including any personal information provided, will be available for public inspection during normal business hours at the above address. People needing assistance to review comments will be provided with appropriate aids such as readers or print magnifiers.

FOR FURTHER INFORMATION CONTACT: William Coughlin, Investigative Analyst, Compliance and Investigations, VETS, U.S. Department of Labor, Room S–1316, 200 Constitution Avenue NW, Washington, DC 20210, or by email at: *1010-FRN-2019-VETS@dol.gov*.

SUPPLEMENTARY INFORMATION:

I. Background

The VETS USERRA/VP Form 1010 (VETS–1010 Form) is used to file complaints with the Department of Labor's Veterans' Employment and Training Service (VETS) under either the Uniformed Services Employment and Reemployment Rights Act (USERRA) or the laws and regulations related to Veterans' Preference (VP) in Federal employment. On October 13, 1994, the Uniformed Services Employment and Reemployment Rights Act (USERRA), Public Law 103–353, 108 Stat. 3150 was signed into law. Contained in Title 38, U.S.C. 4301–4335, USERRA is the replacement for the Veterans' Reemployment Rights (VRR) law. The purposes of USERRA laws and regulations are: To minimize disruption to the lives of persons who perform service in the uniformed services (including the National Guard and Reserves), as well as to their employers, their fellow employees, and their communities, by providing for prompt reemployment of such persons upon completion of such service; to encourage individuals to participate in non-career uniformed service by eliminating and minimizing the disadvantages to civilian careers and employment which can result from such service; and to prohibit discrimination in employment and acts of reprisal against persons because of their obligations in the uniformed services, prior service, intention to join the uniformed services, filing of a USERRA claim, seeking assistance concerning an alleged USERRA violation, testifying in a proceeding, or otherwise assisting in an investigation of a USERRA claim. The Veterans Employment Opportunities Act (VEOA) of 1998, Public Law 105–339, 12 Stat. 3182, contained in Title 5 U.S.C. 3330a–3330c, authorizes the Secretary of Labor to provide assistance to preference eligible individuals who believe their rights under the veterans' preference laws have been violated, and to investigate claims filed by those individuals. The purposes of veterans' preference laws include: To provide preference for certain veterans over others in Federal hiring from competitive lists of applicants; to allow access and open up Federal job opportunities to veterans that might otherwise be closed to the public; and to provide preference eligible veterans with preference over others in retention during reductions in force in Federal agencies. VETS has an electronic complaint form, the VETS e1010, available on our website at: *https://vets1010.dol.gov/Login.aspx,* and which may also be accessed via our USERRA elaws Advisor (*https://webapps.dol.gov/elaws/vets/userra/*) and Veterans' Preference elaws Advisor (*https://webapps.dol.gov/elaws/vetspref.htm*). The e1010 may be completed and submitted electronically without having to download, print, and mail a signed hard copy to our Atlanta data center.

II. Desired Focus of Comments

VETS is soliciting comments concerning the proposed information collection in the VETS–1010 Form. The Department of Labor is particularly interested in comments which:

- Evaluate whether the proposed collection of information is necessary for the proper performance of the functions of the agency, including whether the information will have practical utility;
- Evaluate the accuracy of the agency's estimate of the burden of the proposed collection of information, including the validity of the methodology and assumptions used;
- Enhance the quality, utility, and clarity of the information to be collected; and
- Minimize the burden of the collection of information on those who are to respond, including through the use of appropriate automated, electronic, mechanical, or other technological collection techniques or other forms of information technology.

III. Current Actions

This notice requests an extension of the current Office of Management and Budget approval of the paperwork requirements for VETS–1010 Form.

Type of Review: Extension.

Agency: Veterans' Employment and Training Service.

Title: VETS/USERRA/VP (VETS–1010 Form.)

OMB Number: 1293–0002.

Affected Public: Individuals or households.

Total Respondents: Approximately 2,250.

Average Time per Response: 30 minutes, including 10 minutes estimated to collect the information needed to file a USERRA or VP claim and 20 minutes estimated to complete the form.

Total Burden Hours: 1,125 hours.

Total Annualized Capital/Startup Costs: $0.

Total Initial Annual Costs: $0.

Comments submitted in response to this notice will be summarized and included in the request for the Office of Management and Budget approval of the information collection request.

Comments will become a matter of public record.

Joseph Shellenberger,

Acting Assistant Secretary, Veterans' Employment and Training Service, U.S. Department of Labor.

[FR Doc. 2019–21165 Filed 9–27–19; 8:45 am]

BILLING CODE 4510–79–P

NATIONAL AERONAUTICS AND SPACE ADMINISTRATION

[Notice: (19–056)]

NASA Advisory Council; Science Committee; Meeting.

AGENCY: National Aeronautics and Space Administration.

ACTION: Notice of meeting.

SUMMARY: In accordance with the Federal Advisory Committee Act, as amended, the National Aeronautics and Space Administration (NASA) announces a meeting of the Science Committee of the NASA Advisory Council (NAC). This Committee reports to the NAC. The meeting will be held for the purpose of soliciting, from the scientific community and other persons, scientific and technical information relevant to program planning.

DATES: Friday, October 18, 2019, 1:00–3:00 p.m., Eastern Time.

FOR FURTHER INFORMATION CONTACT: Ms. KarShelia Henderson, Science Mission Directorate, NASA Headquarters, Washington, DC 20546, (202) 358–2355, fax (202) 358–2779, or *khenderson@nasa.gov.*

SUPPLEMENTARY INFORMATION: The meeting will be open to the public telephonically and by WebEx. You must use a touch-tone phone to participate in this meeting. Any interested person may dial the toll free number 1–888–469–1762 or toll number 1–212–287–1653, passcode 8281293 followed by the # sign, to participate in this meeting by telephone. The WebEx link is *https://nasaenterprise.webex.com;* the meeting number is 904 615 112 and the password is SC@Oct2019 (case sensitive). The agenda for the meeting includes the following topics:

—Science Mission Directorate Missions, Programs and Activities

It is imperative that the meeting be held on these dates to the scheduling priorities of the key participants.

Carol Hamilton,

Acting Advisory Committee Management Officer, National Aeronautics and Space Administration.

[FR Doc. 2019–21130 Filed 9–27–19; 8:45 am]

BILLING CODE 7510–13–P

NATIONAL AERONAUTICS AND SPACE ADMINISTRATION

[Notice: (19–057)]

NASA Advisory Council; Regulatory and Policy Committee; Meeting

AGENCY: National Aeronautics and Space Administration.

ACTION: Notice of meeting.

SUMMARY: In accordance with the Federal Advisory Committee Act, as amended, the National Aeronautics and Space Administration (NASA) announces a meeting of the Regulatory and Policy Committee of the NASA Advisory Council (NAC). This Committee reports to the NAC.

DATES: Wednesday, October 16, 2019, from 10:00 a.m.–3:00 p.m., Eastern Time.

ADDRESSES: NASA Headquarters, Room 2R69, 300 E Street SW, Washington, DC 20546.

FOR FURTHER INFORMATION CONTACT: Mr. Andrew Rowe, Designated Federal Officer, Office of Legislative and Intergovernmental Affairs, NASA Headquarters, Washington, DC 20546, (202) 358–4269 or *andrew.rowe@nasa.gov.*

SUPPLEMENTARY INFORMATION: This meeting will be open to the public up to the capacity of the meeting room. This meeting is also available telephonically and by WebEx. You must use a touch-tone phone to participate in this meeting. Any interested person may dial the toll-free number 1–844–467–6272 or toll number 1–720–259–6462 and then the numeric passcode 713620, followed by the # sign. *Note:* If dialing in, please ''mute'' your phone. To join via WebEx, the link is *https://nasaenterprise.webex.com/.* The meeting number is 904 284 879 and the meeting password is tD2SAXJ* (case sensitive).

The agenda for the meeting will include:

—Extraction and Utilization of Extraterrestrial Resources

—Discussion of Procurement Reform

—Discussion of Spectrum Issues

Attendees will be requested to sign a register and to comply with NASA Headquarters security requirements, including the presentation of a valid picture ID to NASA Security before access to NASA Headquarters. Foreign nationals attending this meeting will be required to provide a copy of their passport and visa in addition to providing the following information no less than 10 days prior to the meeting: Full name; gender; date/place of birth; citizenship; passport information (number, country, telephone); visa information (number, type, expiration date); employer/affiliation information (name of institution, address, country, telephone); title/position of attendee. To expedite admittance, attendees that are U.S. citizens and Permanent Residents (green card holders) are requested to provide full name and citizenship status no less than 3 working days prior to the meeting. Information should be sent to Mr. Andrew Rowe, at *andrew.rowe@nasa.gov.*

Carol Hamilton,

Acting Advisory Committee Management Officer, National Aeronautics and Space Administration.

[FR Doc. 2019–21131 Filed 9–27–19; 8:45 am]

BILLING CODE 7510–13–P

OFFICE OF THE FEDERAL REGISTER

Publication Procedures for Federal Register Documents During a Funding Hiatus

AGENCY: Office of the Federal Register.

ACTION: Notice of special procedures.

SUMMARY: In the event of an appropriations lapse, the Office of the Federal Register (OFR) would be required to publish documents directly related to the performance of governmental functions necessary to address imminent threats to the safety of human life or protection of property and documents related to funded programs if delaying publication until the end of the appropriations lapse would prevent or significantly damage the execution of funded functions at the agency. Since it

would be impracticable for the OFR to make case-by-case determinations as to whether certain documents are directly related to activities that qualify for an exemption under the Antideficiency Act, the OFR will place responsibility on agencies submitting documents to certify that their documents are authorized under the Act.

FOR FURTHER INFORMATION CONTACT: Amy Bunk, Director of Legal Affairs and Policy, or Miriam Vincent, Staff Attorney, Office of the Federal Register, National Archives and Records Administration, (202) 741–6030 or *Fedreg.legal@nara.gov.*

SUPPLEMENTARY INFORMATION: Due to the possibility of a lapse in appropriations and in accordance with the provisions of the Antideficiency Act, as amended by Public Law 101–508, 104 Stat. 1388 (31 U.S.C. 1341), the OFR announces special procedures for agencies submitting documents for publication in the **Federal Register**.

In the event of an appropriations lapse, the OFR would be required to publish documents directly related to the performance of governmental functions necessary to address imminent threats to the safety of human life or protection of property and documents related to funded programs if delaying publication until the end of the appropriations lapse would prevent or significantly damage the execution of funded functions at the agency. Since it would be impracticable for the OFR to make case-by-case determinations as to whether certain documents are directly related to activities that qualify for an exemption under the Antideficiency Act, the OFR will place responsibility on agencies submitting documents to certify that their documents are authorized under the Act.

During a funding hiatus affecting one or more Federal agencies, the OFR will remain open to accept and process documents authorized to be published in the daily **Federal Register** in the absence of continuing appropriations. An agency wishing to submit a document to the OFR during a funding hiatus must attach a transmittal letter to the document which certifies that publication in the **Federal Register** is necessary:

Unfunded Agencies or Programs

- To safeguard human life, protect property, or
- Provide other emergency services consistent with the performance of functions and services exempted under the Antideficiency Act.

Funded Agencies or Programs

- Because delaying publication until the end of the appropriations lapse would prevent or significantly damage the execution of funded functions at the agency.

Under the August 16, 1995 opinion of the Office of Legal Counsel of the Department of Justice (OLC), *Government Operations in the Event of a Laspe in Appropriations,* exempt functions and services would include activities such as those related to the constitutional duties of the President, food and drug inspection, air traffic control, responses to natural or manmade disasters, law enforcement and supervision of financial markets. Documents related to normal or routine activities of Federal agencies, even if funded under prior year appropriations, will not be published.

In another opinion issued on December 13, 1995, *Effect of Appropriations for Other Agencies and Branches on the Authority to Continue Department of Justice Functions During the Lapse in the Department's Appropriations,* the OLC found that the necessary-implication exception allowed unfunded agencies to provide support to funded agencies or programs under certain conditions. As this applies to the OFR, if an agency with current appropriations submits a document for publication and certifies that delaying publication until the end of the appropriations lapse would prevent or significantly damage the execution of funded functions at the agency, then publication in the **Federal Register** will be a function or service excepted under the Anti-Deficiency Act.

At the onset of a funding hiatus, the OFR may suspend the regular three-day publication schedule to permit a limited number of exempt personnel to process emergency documents. Agency officials will be informed as to the schedule for filing and publishing individual documents.

Authority: The authority for this action is 44 U.S.C. 1502 and 1 CFR 2.4 and 5.1.

Oliver A. Potts,

Director of the Federal Register.

[FR Doc. 2019–21317 Filed 9–27–19; 8:45 am]

BILLING CODE 1301–00–P

NATIONAL ARCHIVES AND RECORDS ADMINISTRATION

[NARA–19–0013; NARA–2019–039]

Records Schedules; Availability and Request for Comments

AGENCY: National Archives and Records Administration (NARA).

ACTION: Notice of availability of proposed records schedules; request for comments.

SUMMARY: The National Archives and Records Administration (NARA) publishes notice of certain Federal agency requests for records disposition authority (records schedules). We publish notice in the **Federal Register** and on regulations.gov for records schedules in which agencies propose to dispose of records they no longer need to conduct agency business. We invite public comments on such records schedules.

DATES: NARA must receive comments by November 14, 2019.

ADDRESSES: You may submit comments by either of the following methods. You must cite the control number, which appears on the records schedule in parentheses after the name of the agency that submitted the schedule.

- *Federal eRulemaking Portal: http://www.regulations.gov.*
- *Mail:* Records Appraisal and Agency Assistance (ACR); National Archives and Records Administration; 8601 Adelphi Road; College Park, MD 20740–6001.

FOR FURTHER INFORMATION CONTACT: Records Management Operations by email at *request.schedule@nara.gov,* by mail at the address above, or by phone at 301–837–1799.

SUPPLEMENTARY INFORMATION:

Public Comment Procedures

We are publishing notice of records schedules in which agencies propose to dispose of records they no longer need to conduct agency business. We invite public comments on these records schedules, as required by 44 U.S.C. 3303a(a), and list the schedules at the end of this notice by agency and subdivision requesting disposition authority.

In addition, this notice lists the organizational unit(s) accumulating the records or states that the schedule has agency-wide applicability. It also provides the control number assigned to each schedule, which you will need if you submit comments on that schedule.

We have uploaded the records schedules and accompanying appraisal memoranda to the *regulations.gov* docket for this notice as ''other'' documents. Each records schedule contains a full description of the records at the file unit level as well as their proposed disposition. The appraisal memorandum for the schedule includes information about the records.

We will post comments, including any personal information and

attachments, to the public docket unchanged. Because comments are public, you are responsible for ensuring that you do not include any confidential or other information that you or a third party may not wish to be publicly posted. If you want to submit a comment with confidential information or cannot otherwise use the *regulations.gov* portal, you may contact *request.schedule@nara.gov* for instructions on submitting your comment.

We will consider all comments submitted by the posted deadline and consult as needed with the Federal agency seeking the disposition authority. After considering comments, we will post on *regulations.gov* a ''Consolidated Reply'' summarizing the comments, responding to them, and noting any changes we have made to the proposed records schedule. We will then send the schedule for final approval by the Archivist of the United States. You may elect at *regulations.gov* to receive updates on the docket, including an alert when we post the Consolidated Reply, whether or not you submit a comment. You may request additional information about the disposition process through the contact information listed above.

We will post schedules on our website in the Records Control Schedule (RCS) Repository, at *https://www.archives.gov/records-mgmt/rcs,* after the Archivist approves them. The RCS contains all schedules approved since 1973.

Background

Each year, Federal agencies create billions of records. To control this accumulation, agency records managers prepare schedules proposing retention periods for records and submit these schedules for NARA's approval. Once approved by NARA, records schedules provide mandatory instructions on what happens to records when no longer needed for current Government business. The records schedules authorize agencies to preserve records of continuing value in the National Archives or to destroy, after a specified period, records lacking continuing administrative, legal, research, or other value. Some schedules are comprehensive and cover all the records of an agency or one of its major subdivisions. Most schedules, however, cover records of only one office or program or a few series of records. Many of these update previously approved schedules, and some include records proposed as permanent.

Agencies may not destroy Federal records without the approval of the Archivist of the United States. The Archivist grants this approval only after thorough consideration of the records' administrative use by the agency of origin, the rights of the Government and of private people directly affected by the Government's activities, and whether or not the records have historical or other value. Public review and comment on these records schedules is part of the Archivist's consideration process.

Schedules Pending

1. Department of the Army, U.S. Army Corps of Engineers, Geotechnical Investigations (DAA–0077–2019–0001).
2. Department of Commerce, National Oceanic and Atmospheric Administration, Center Weather Service Unit Files (DAA–0370–2019–0002).
3. Department of Defense, National Security Agency, Security Forensic Investigative Files (DAA–0457–2018–0002).
4. Department of Defense, National Security Agency, Security Case Control Investigative Files (DAA–0457–2019–0001).
5. Department of Homeland Security, Transportation Security Administration, First Observer Plus (DAA–0560–2019–0006).
6. Department of Homeland Security, U.S. Citizenship and Immigration Services, Public Charge Bonds (DAA–0566–2019–0024).
7. Securities and Exchange Commission, Division of Enforcement, Whistleblower Application Files (DAA–0266–2019–0003).

Laurence Brewer,

Chief Records Officer for the U.S. Government.

[FR Doc. 2019–21129 Filed 9–27–19; 8:45 am]

BILLING CODE 7515–01–P

NATIONAL SCIENCE FOUNDATION

Notice of Availability of a Record of Decision Following a Final Comprehensive Environmental Evaluation (CEE) for Continuation and Modernization of McMurdo Station Area Activities in Antarctica

AGENCY: National Science Foundation.

ACTION: Notice of availability.

SUMMARY: The National Science Foundation (NSF) gives notice of the availability of a Record of Decision following a Final Comprehensive Environmental Evaluation (CEE) for Continuation and Modernization of McMurdo Station Area Activities, pursuant to the Antarctic Conservation Act, as amended, its implementing regulations, and in accordance with the Protocol on Environmental Protection to the Antarctic Treaty. The proposed activity would implement modernization projects at McMurdo Station while continuing United States Antarctic Program science and operations at McMurdo Station and locations supported by the Station.

ADDRESSES: Copies of the Notice of Availability of the Record of Decision are available upon request from Dr. Polly A. Penhale, Senior Advisor, Environment, Office of Polar Programs, National Science Foundation, 2415 Eisenhower Avenue, Alexandria, Virginia 22314 or *CEE.comments@nsf.gov.*

FOR FURTHER INFORMATION CONTACT: For further information regarding the CEE process, please contact Dr. Polly A. Penhale, at the above address, 703–292–8030, or *CEE.comments@nsf.gov.*

SUPPLEMENTARY INFORMATION: Article 3 of Annex I to the Protocol on Environmental Protection to the Antarctic Treaty requires the preparation of a CEE for any proposed Antarctic activity likely to have more than a minor or transitory impact. The draft CEE was made available to Antarctic Treaty Parties and the Committee for Environmental Protection to the Antarctic Treaty for a 120-day period, as specified above.

The draft CEE was published in the **Federal Register** (Vol. 84, No. 76/Friday, April 19, 2019, Page 16547) for a 90-comment period, as specified in 45 CFR 641.18.

Comments were received and considered as described in the Final CEE for Continuation and Modernization of McMurdo Station Area Activities in Antarctica. The Final CEE was published in the **Federal Register** (Vol 84, No. 159, Friday, August 16, 2019, Page 42021).

The Final CEE may be viewed by interested parties at *https://www.acpt.nsf.gov/geo/opp/antarct/treaty/cees/AIMS/Final%20CEE_McMurdo%20Modernization_v8_05Aug2019.pdf.*

Additional information on the proposed actions and purpose and need was provided in the Notice of Intent to prepare a CEE published in the **Federal Register** (Vol. 81, No. 164/Wednesday, August 24, 2016, Pages 57940–57941).

Erika N. Davis,

Program Specialist, Office of Polar Programs.

[FR Doc. 2019–21173 Filed 9–27–19; 8:45 am]

BILLING CODE 7555–01–P

NUCLEAR REGULATORY COMMISSION

[NRC–2019–0001]

Sunshine Act Meetings

TIME AND DATE: Weeks of September 30, October 7, 14, 21, 28, November 4, 2019.

PLACE: Commissioners' Conference Room, 11555 Rockville Pike, Rockville, Maryland.

STATUS: Public and Closed.

MATTERS TO BE CONSIDERED:

Week of September 30, 2019

There are no meetings scheduled for the week of September 30, 2019.

Week of October 7, 2019—Tentative

There are no meetings scheduled for the week of October 7, 2019.

Week of October 14, 2019—Tentative

There are no meetings scheduled for the week of October 14, 2019.

Week of October 21, 2019—Tentative

There are no meetings scheduled for the week of October 21, 2019.

Week of October 28, 2019—Tentative

There are no meetings scheduled for the week of October 28, 2019.

Week of November 4, 2019—Tentative

There are no meetings scheduled for the week of November 4, 2019.

CONTACT PERSON FOR MORE INFORMATION: For more information or to verify the status of meetings, contact Denise McGovern at 301–415–0681 or via email at *Denise.McGovern@nrc.gov*. The schedule for Commission meetings is subject to change on short notice.

The NRC Commission Meeting Schedule can be found on the internet at: *http://www.nrc.gov/public-involve/public-meetings/schedule.html*.

The NRC provides reasonable accommodation to individuals with disabilities where appropriate. If you need a reasonable accommodation to participate in these public meetings or need this meeting notice or the transcript or other information from the public meetings in another format (*e.g.,* braille, large print), please notify Anne Silk, NRC Disability Program Specialist, at 301–287–0745, by videophone at 240–428–3217, or by email at *Anne.Silk@nrc.gov*. Determinations on requests for reasonable accommodation will be made on a case-by-case basis.

Members of the public may request to receive this information electronically. If you would like to be added to the distribution, please contact the Nuclear Regulatory Commission, Office of the Secretary, Washington, DC 20555 (301–415–1969), or by email at *Tyesha.Bush@nrc.gov*.

The NRC is holding the meetings under the authority of the Government in the Sunshine Act, 5 U.S.C. 552b.

Dated at Rockville, Maryland, this 26th day of September 2019.

For the Nuclear Regulatory Commission.

Denise L. McGovern,

Policy Coordinator, Office of the Secretary.

[FR Doc. 2019–21355 Filed 9–26–19; 4:15 pm]

BILLING CODE 7590–01–P

NUCLEAR REGULATORY COMMISSION

[Docket No. 50–456 and 50–457; NRC–2018–0277]

Exelon Generation Company, LLC; Braidwood Station Units 1 and 2

AGENCY: Nuclear Regulatory Commission.

ACTION: License amendment application; withdrawal by applicant.

SUMMARY: The U.S. Nuclear Regulatory Commission (NRC) has granted the request of Exelon Generation Company, LLC to withdraw its application dated July 19, 2018, as supplemented by letters dated October 19, 2018 and May 30, 2019, for proposed amendments to Renewed Facility Operating License Nos. NPF–72 and NPF–77. The proposed amendment would have modified the renewed facility operating licenses to utilize TVEL TVS–K lead test assemblies.

DATES: September 30, 2019.

ADDRESSES: Please refer to Docket ID NRC–2018–0277 when contacting the NRC about the availability of information regarding this document. You may obtain publicly-available information related to this document using any of the following methods:

- *Federal Rulemaking website:* Go to *https://www.regulations.gov* and search for Docket ID NRC–2018–0277. Address questions about NRC dockets IDs in *Regulations.gov* to Jennifer Borges; telephone: 301–287–9127; email: *Jennifer.Borges@nrc.gov.* For technical questions, contact the individual listed in the **FOR FURTHER INFORMATION CONTACT** section of this document.
- *NRC's Agencywide Documents Access and Management System (ADAMS):* You may obtain publicly-available documents online in the ADAMS Public Documents collection at *https://www.nrc.gov/reading-rm/adams.html.* To begin the search, select ''Begin Web-based ADAMS Search.'' For problems with ADAMS, please contact the NRC's Public Document Room (PDR) reference staff at 1–800–397–4209, 301–415–4737, or by email to *pdr.resource@nrc.gov.* The ADAMS accession number for each document referenced (if it is available in ADAMS) is provided the first time that it is mentioned in this document.
- *NRC's PDR:* You may examine and purchase copies of public documents at the NRC's PDR, Room O1–F21, One White Flint North, 11555 Rockville Pike, Rockville, Maryland 20852.

FOR FURTHER INFORMATION CONTACT: Joel S. Wiebe, Office of Nuclear Reactor Regulation, U.S. Nuclear Regulatory Commission, Washington, DC 20555–0001; telephone: 301–415–6606, email: *Joel.Wiebe@nrc.gov.*

SUPPLEMENTARY INFORMATION: The NRC has granted the request of Exelon Generation Company, LLC (the licensee) to withdraw its July 19, 2018, application (ADAMS Accession No. ML18204A169), as supplemented by letters dated October 19, 2018 (ADAMS Accession No. ML18296A288), and May 30, 2019 (ADAMS Accession No. Ml19150A428), for proposed amendments to Renewed Facility Operating License Nos. NPF–72 and NPF–77 for the Braidwood Station, Units 1 and 2, located in Dewitt County, Illinois.

The proposed amendments would have added new License Conditions to Appendix C, ''Additional Conditions,'' of the Braidwood Station Renewed Operating Licenses for Units 1 and 2, that authorize the use of up to eight Joint Stock Company TVEL (Fuel Company of Rosatom) TVS–K lead test assemblies in non-limiting reactor core locations for operation and evaluation.

The NRC's initial proposed finding of no significant hazards consideration was published in the **Federal Register** dated January 8, 2019 (84 FR 91).

Dated at Rockville, Maryland, this 25th day of September, 2019.

For the Nuclear Regulatory Commission.

Joel S. Wiebe,

Senior Project Manager, Plant Licensing Branch III, Division of Operating Reactor Licensing, Office of Nuclear Reactor Regulation.

[FR Doc. 2019–21110 Filed 9–27–19; 8:45 am]

BILLING CODE 7590–01–P

OVERSEAS PRIVATE INVESTMENT CORPORATION

Memorandum on the Delegation of Functions and Authorities Under the Better Utilization of Investments Leading to Development Act of 2018

AGENCY: Overseas Private Investment Corporation.

ACTION: Notice.

A ''Memorandum on the Delegation of Functions and Authorities under the Better Utilization of Investments Leading to Development Act of 2018'' was issued by the President on September 24, 2019. The President authorized and directed the President of the Overseas Private Investment Corporation to publish this memorandum in the **Federal Register**. The text of the memorandum is set out below.

Dated: September 24, 2019.

Catherine F.I. Andrade,

Corporate Secretary, Overseas Private Investment Corporation.

MEMORANDUM FOR

THE PRESIDENT OF THE OVERSEAS PRIVATE INVESTMENT CORPORATION

THE ADMINISTRATOR OF THE UNITED STATES AGENCY FOR INTERNATIONAL DEVELOPMENT

SUBJECT: Delegation of Functions and Authorities under the Better Utilization of Investments Leading to Development Act of 2018

By the authority vested in me as President by the Constitution and the laws of the United States of America, including section 1462 of title VI of division F of Public Law 115–254 (section 9682 of title 22, United States Code) (the ''Act''), and section 301 of title 3, United States Code, I hereby delegate to the President of the Overseas Private Investment Corporation, in consultation with the Administrator of the United States Agency for International Development, the functions and authorities vested in the President by the Act to submit a reorganization plan, including any modifications or revisions thereto, and to consult with the appropriate congressional committees on such plan, including any modifications and revisions thereto.

The President of the Overseas Private Investment Corporation is authorized and directed to publish this memorandum in the *Federal Register*.

DONALD J. TRUMP

THE WHITE HOUSE

Washington, September 24, 2019

[FR Doc. 2019–21181 Filed 9–27–19; 8:45 am]

BILLING CODE 3210–01–P

POSTAL SERVICE

Product Change—Priority Mail Express and Priority Mail Negotiated Service Agreement

AGENCY: Postal Service™.

ACTION: Notice.

SUMMARY: The Postal Service gives notice of filing a request with the Postal Regulatory Commission to add a domestic shipping services contract to the list of Negotiated Service Agreements in the Mail Classification Schedule's Competitive Products List.

DATES: *Date of required notice:* September 30, 2019.

FOR FURTHER INFORMATION CONTACT: Sean Robinson, 202–268–8405.

SUPPLEMENTARY INFORMATION: The United States Postal Service® hereby gives notice that, pursuant to 39 U.S.C. 3642 and 3632(b)(3), on September 25, 2019, it filed with the Postal Regulatory Commission a *USPS Request to Add Priority Mail Express & Priority Mail Contract 99 to Competitive Product List.* Documents are available at *www.prc.gov,* Docket Nos. MC2019–204, CP2019–226.

Sean Robinson,

Attorney, Corporate and Postal Business Law.

[FR Doc. 2019–21144 Filed 9–27–19; 8:45 am]

BILLING CODE 7710–12–P

POSTAL SERVICE

Product Change—Priority Mail Negotiated Service Agreement

AGENCY: Postal Service™.

ACTION: Notice.

SUMMARY: The Postal Service gives notice of filing a request with the Postal Regulatory Commission to add a domestic shipping services contract to the list of Negotiated Service Agreements in the Mail Classification Schedule's Competitive Products List.

DATES: *Date of required notice:* September 30, 2019.

FOR FURTHER INFORMATION CONTACT: Sean Robinson, 202–268–8405.

SUPPLEMENTARY INFORMATION: The United States Postal Service® hereby gives notice that, pursuant to 39 U.S.C. 3642 and 3632(b)(3), on September 25, 2019, it filed with the Postal Regulatory Commission a *USPS Request to Add Priority Mail Contract 552 to Competitive Product List.* Documents are available at *www.prc.gov,* Docket Nos. MC2019–205, CP2019–227.

Sean Robinson,

Attorney, Corporate and Postal Business Law.

[FR Doc. 2019–21145 Filed 9–27–19; 8:45 am]

BILLING CODE 7710–12–P

POSTAL SERVICE

Product Change—First-Class Package Service Negotiated Service Agreement

AGENCY: Postal Service™.

ACTION: Notice.

SUMMARY: The Postal Service gives notice of filing a request with the Postal Regulatory Commission to add a domestic shipping services contract to the list of Negotiated Service Agreements in the Mail Classification Schedule's Competitive Products List.

DATES: *Date of required notice:* September 30, 2019.

FOR FURTHER INFORMATION CONTACT: Sean Robinson, 202–268–8405.

SUPPLEMENTARY INFORMATION: The United States Postal Service® hereby gives notice that, pursuant to 39 U.S.C. 3642 and 3632(b)(3), on September 25, 2019, it filed with the Postal Regulatory Commission a *USPS Request to Add First-Class Package Service Contract 104 to Competitive Product List.* Documents are available at *www.prc.gov,* Docket Nos. MC2019–206, CP2019–228.

Sean Robinson,

Attorney, Corporate and Postal Business Law.

[FR Doc. 2019–21146 Filed 9–27–19; 8:45 am]

BILLING CODE 7710–12–P

SECURITIES AND EXCHANGE COMMISSION

[SEC File No. 270–793, OMB Control No. 3235–0734]

Submission for OMB Review; Comment Request

Upon Written Request, Copies Available From: Securities and Exchange Commission, Office of FOIA Services, 100 F Street NE, Washington, DC 20549–2736.

Extension:
Rule 22c–1

Notice is hereby given that pursuant to the Paperwork Reduction Act of 1995 (44 U.S.C. 3501–3520), the Securities and Exchange Commission (the ''Commission'') has submitted to the Office of Management and Budget a request for extension of the previously

approved collection of information discussed below.

Rule 22c–1 (17 CFR 270.22c–1) under the Investment Company Act of 1940 (15 U.S.C. 80a) (the ''Investment Company Act'' or ''Act'') enables a fund to choose to use ''swing pricing'' as a tool to mitigate shareholder dilution. Rule 22c–1 is intended to promote investor protection by providing funds with an additional tool to mitigate the potentially dilutive effects of shareholder purchase or redemption activity and a set of operational standards that allow funds to gain comfort using swing pricing as a means of mitigating potential dilution.

The respondents to amended rule 22c–1 are open-end management investment companies (other than money market funds or exchange-traded funds) that engage in swing pricing. Compliance with rule 22c–1(a)(3) is mandatory for any fund that chooses to use swing pricing to adjust its NAV in reliance on the rule.

While we are not aware of any funds that have engaged in swing pricing,[1] we are estimating for the purpose of this analysis that 5 fund complexes have funds that may adopt swing pricing policies and procedures in the future pursuant to the rule. We estimate that the total burden associated with the preparation and approval of swing pricing policies and procedures by those fund complexes that would use swing pricing will be 280 hours.[2] We also estimate that it will cost a fund complex $43,406 to document, review and initially approve these policies and procedures, for a total cost of $217,030.[3]

Rule 22c–1 requires a fund that uses swing pricing to maintain the fund's swing policies and procedures that are in effect, or at any time within the past six years were in effect, in an easily accessible place.[4] The rule also requires a fund to retain a written copy of the periodic report provided to the board prepared by the swing pricing administrator that describes, among other things, the swing pricing administrator's review of the adequacy of the fund's swing pricing policies and procedures and the effectiveness of their implementation, including the impact on mitigating dilution and any back-testing performed.[5] The retention of these records is necessary to allow the staff during examinations of funds to determine whether a fund is in compliance with its swing pricing policies and procedures and with rule 22c–1. We estimate a time cost per fund complex of $292.[6] We estimate that the total for recordkeeping related to swing pricing will be 20 hours, at an aggregate cost of $1,460, for all fund complexes that we believe include funds that have adopted swing pricing policies and procedures.[7]

Amortized over a three-year period, we believe that the hour burdens and time costs associated with rule 22c–1, including the burden associated with the requirements that funds adopt policies and procedures, obtain board approval, and periodic review of an annual written report from the swing pricing administrator, and retain certain records and written reports related to swing pricing, will result in an average aggregate annual burden of 113.3 hours, and average aggregate time costs of $73,803.[8]

These estimates of average costs are made solely for the purposes of the Paperwork Reduction Act. The estimate is not derived from a comprehensive or even a representative survey or study of the costs of Commission rules.

This collection of information is necessary to obtain a benefit and will not be kept confidential. An agency may not conduct or sponsor, and a person is not required to respond to, a collection of information unless it displays a currently valid OMB control number.

The public may view the background documentation for this information collection at the following website, *www.reginfo.gov.* Comments should be directed to: (i) Desk Officer for the Securities and Exchange Commission, Office of Information and Regulatory Affairs, Office of Management and Budget, Room 10102, New Executive Office Building, Washington, DC 20503, or by sending an email to: *Lindsay.M.Abate@omb.eop.gov*; and (ii) Charles Riddle, Acting Director/Chief Information Officer, Securities and Exchange Commission, c/o Candace Kenner, 100 F Street NE, Washington, DC 20549 or send an email to: *PRA_Mailbox@sec.gov.* Comments must be submitted to OMB within 30 days of this notice.

Dated: September 24, 2019.

Jill M. Peterson,

Assistant Secretary.

[FR Doc. 2019–21080 Filed 9–27–19; 8:45 am]

BILLING CODE P

[1] No funds have engaged in swing pricing as reported on Form N–CEN as of August 14, 2019.

[2] This estimate is based on the following calculation: (48 + 2 + 6) hours × 5 fund complexes = 280 hours.

[3] These estimates are based on the following calculations: 24 hours × $201 (hourly rate for a senior accountant) = $4,824; 24 hours × $463 (blended hourly rate for assistant general counsel ($433) and chief compliance officer ($493)) = $11,112; 2 hours (for a fund attorney's time to prepare materials for the board's determinations) × $340 (hourly rate for a compliance attorney) = $680; 6 hours × $4,465 (hourly rate for a board of 8 directors) = $26,790; ($4,824 + $11,112 + $680 + $26,790) = $43,406; $43,406 × 5 fund complexes = $217,030. The hourly wages used are from SIFMA's Management & Professional Earnings in the Securities Industry 2013, modified by Commission staff to account for an 1800-hour work-year and inflation, and multiplied by 5.35 to account for bonuses, firm size, employee benefits, and overhead. The staff previously estimated in 2009 that the average cost of board of director time was $4,000 per hour for the board as a whole, based on information received from funds and their counsel. Adjusting for inflation, the staff estimates that the current average cost of board of director time is approximately $4,465.

[4] *See* rule 22c–1(a)(3)(iii).

[5] *See id.*

[6] This estimate is based on the following calculations: 2 hours × $58 (hourly rate for a general clerk) = $116; 2 hours × $88 (hourly rate for a senior computer operator) = $176. $116 + $176 = $292.

[7] These estimates are based on the following calculations: 4 hours × 5 fund complexes = 20 hours. 5 fund complexes × $292 = $1,460.

[8] These estimates are based on the following calculations: (280 hours (year 1) + (3 × 20 hours) (years 1, 2 and 3)) ÷ 3 = 113.3 hours; ($217,030 (year 1) + (3 × $1,460) (years 1, 2 and 3)) ÷ 3 = $73,803.

SECURITIES AND EXCHANGE COMMISSION

[Release No. 34–87071; File No. SR–NYSEArca–2019–39]

Self-Regulatory Organizations; NYSE Arca, Inc.; Order Instituting Proceedings To Determine Whether To Approve or Disapprove a Proposed Rule Change To Amend NYSE Arca Rule 8.201–E (Commodity-Based Trust Shares) and To List and Trade Shares of the United States Bitcoin and Treasury Investment Trust Under NYSE Arca Rule 8.201–E

September 24, 2019.

On June 12, 2019, NYSE Arca, Inc. (''NYSE Arca'' or ''Exchange'') filed with the Securities and Exchange Commission (''Commission''), pursuant to Section 19(b)(1) of the Securities Exchange Act of 1934 (''Act'')[1] and Rule 19b–4 thereunder,[2] a proposed rule change to amend NYSE Arca Rule 8.201–E and to list and trade shares (''Shares'') of the United States Bitcoin and Treasury Investment Trust (''Trust'') under NYSE Arca Rule 8.201–E, as proposed to be amended. The proposed rule change was published for comment in the **Federal Register** on July 1, 2019.[3]

On August 12, 2019, pursuant to Section 19(b)(2) of the Act,[4] the Commission designated a longer period

[1] 15 U.S.C. 78s(b)(1).

[2] 17 CFR 240.19b–4.

[3] *See* Securities Exchange Act Release No. 86195 (June 25, 2019), 84 FR 31373 (July 1, 2019) (''Notice''). Comments on the proposed rule change can be found at: *https://www.sec.gov/comments/sr-nysearca-2019-39/srnysearca201939.htm.*

[4] 15 U.S.C. 78s(b)(2).

within which to approve the proposed rule change, disapprove the proposed rule change, or institute proceedings to determine whether to disapprove the proposed rule change.[5] This order institutes proceedings under Section 19(b)(2)(B) of the Act[6] to determine whether to approve or disapprove the proposed rule change.

I. Summary of the Proposal

As described in detail in the Notice,[7] the Exchange proposes to amend NYSE Arca Rule 8.201–E, which governs the listing and trading of Commodity-Based Trust Shares on the Exchange,[8] and to list and trade Shares of the Trust under NYSE Arca Rule 8.201–E, as proposed to be amended.

Proposed Amendments to NYSE Arca Rule 8.201–E

NYSE Arca Rule 8.201–E(c)(1) currently states that Commodity-Based Trust Shares are issued by a trust in a specified aggregate minimum number in return for a deposit of a quantity of the underlying commodity, and may be redeemed in the same specified minimum number by a holder for the quantity of the underlying commodity. The Exchange proposes to amend Rule 8.201–E(c)(1) to provide that Commodity-Based Trust Shares may be issued and redeemed for the underlying commodity and/or cash. The Exchange further proposes to amend Rule 8.201–E(c)(2) to state that the term ''commodity'' is defined in Section 1(a)(9) of the Commodity Exchange Act.

Proposal To List and Trade Shares of the Trust

The Shares would be issued by the Trust, a Delaware statutory trust.[9] The Trust would operate pursuant to a trust agreement between Wilshire Phoenix Funds, LLC (''Sponsor'') and Delaware Trust Company. UMB Bank N.A. would act as custodian for the Trust's cash and U.S. treasury assets (''Cash and Treasury Custodian''), and UMB Fund Services, Inc. would act as the transfer agent and administrator of the Trust. Coinbase Custody Trust Company, LLC would act as the Bitcoin custodian for the Trust (''Bitcoin Custodian'').

The investment objective of the Trust would be for the Shares to closely reflect the Bitcoin Treasury Index (''Index''), less the Trust's liabilities and expenses. The Trust would have no assets other than (a) bitcoin and (b) short-term U.S. Treasury securities with a maturity of less than one year (''T-Bills''). The Trust would also hold U.S. dollars for short periods of time in connection with (i) the maturity of any T-Bills, (ii) the purchase and sale of bitcoin and/or T-Bills, and (iii) the payment of redemptions, if any, and fees and expenses of the Trust. Bitcoin would be held by the Bitcoin Custodian on behalf of the Trust, and T-Bills and U.S. dollars would be held by the Cash and Treasury Custodian on behalf of the Trust. The amount of bitcoin and T-Bills held by the Trust would be determined by the Index.[10]

The Index is calculated and published by Solactive AG (''Index Calculation Agent'').[11] The level of the Index is published on each business day at approximately 5:00 p.m. Eastern time and has two components: (1) A notional component representing bitcoin (''Bitcoin Component''); and (2) a notional component representing T-Bills (''Treasury Component''). On a monthly basis, the Index rebalances its weighting of the Bitcoin Component and the Treasury Component utilizing a mathematically derived passive rules-based methodology that is based on the daily volatility of the ''Bitcoin Price.'' The Bitcoin Price, which will be the price of bitcoin used to determine the weighting of the Bitcoin Component and the Treasury Component of the Index, as well as the value of bitcoin held by the Trust, is based on the Chicago Mercantile Exchange (''CME'') CF Bitcoin Reference Rate (''CME CF BRR''). On a monthly basis, following the calculation of the weighting of the components of the Index, the Trust would rebalance its holdings in bitcoin and T-Bills in order to closely replicate the Index.[12]

According to the proposal, the Trust may offer and sell Shares from time to time through (1) underwriters, placement agents, or distributors, or such other means as the Sponsor may determine or (2) through subscription agreements. In addition, upon at least five business days' prior written notice, a shareholder may redeem all or a portion of its Shares on the last business day of each calendar month. All redemptions will be based on the net asset value (''NAV'') of Shares submitted for redemption, determined as of the last business day of the applicable calendar month. In general, redemptions will be deemed to occur on a ''first-in first-out'' basis among Shares held by a particular shareholder.[13]

II. Proceedings To Determine Whether To Approve or Disapprove SR–NYSEArca–2019–39 and Grounds for Disapproval Under Consideration

The Commission is instituting proceedings pursuant to Section 19(b)(2)(B) of the Act[14] to determine whether the proposed rule change should be approved or disapproved. Institution of such proceedings is appropriate at this time in view of the legal and policy issues raised by the proposed rule change. Institution of proceedings does not indicate that the Commission has reached any conclusions with respect to any of the issues involved. Rather, as described below, the Commission seeks and encourages interested persons to provide comments on the proposed rule change.

Pursuant to Section 19(b)(2)(B) of the Act,[15] the Commission is providing notice of the grounds for disapproval under consideration. The Commission is instituting proceedings to allow for additional analysis of the proposed rule change's consistency with Section 6(b)(5) of the Act, which requires, among other things, that the rules of a national securities exchange be ''designed to prevent fraudulent and manipulative acts and practices, to promote just and equitable principles of trade,'' and ''to protect investors and the public interest.''[16]

The Commission asks that commenters address the sufficiency of the Exchange's statements in support of the proposal, which are set forth in the

[5] *See* Securities Exchange Act Release No. 86631 (Aug. 12, 2019), 84 FR 42028 (Aug. 16, 2019). The Commission designated September 29, 2019, as the date by which it should approve, disapprove, or institute proceedings to determine whether to disapprove the proposed rule change.

[6] 15 U.S.C. 78s(b)(2)(B).

[7] *See* Notice, *supra* note 3.

[8] NYSE Arca Rule 8.201–E(c)(1) defines the term ''Commodity-Based Trust Shares'' as a security (a) that is issued by a trust that holds a specified commodity deposited with the Trust; (b) that is issued by such trust in a specified aggregate minimum number in return for a deposit of a quantity of the underlying commodity; and (c) that, when aggregated in the same specified minimum number, may be redeemed at a holder's request by such trust which will deliver to the redeeming holder the quantity of the underlying commodity.

[9] On May 21, 2019, the Trust filed Amendment 3 to Form S–1 under the Securities Act of 1933 (File No. 333–229187).

[10] *See* Notice, *supra* note 3, 84 FR at 31374–76.

[11] According to the Exchange, the Index is a passive, rules-based index, and the Index Calculation Agent provides calculation services only. The Index Calculation Agent is not affiliated with the Sponsor and has represented that it and its employees are subject to market abuse laws and that the Index Calculation Agent has established and maintains processes and procedures to prevent the use and dissemination of material, non-public information regarding the Index. *See id.* at 31375 n.11.

[12] *See id.* at 31375–76.

[13] *See id.* at 31377.

[14] 15 U.S.C. 78s(b)(2)(B).

[15] *Id.*

[16] 15 U.S.C. 78f(b)(5).

Notice,[17] in addition to any other comments they may wish to submit about the proposed rule change. In particular, the Commission seeks comment on the following questions and asks commenters to submit data where appropriate to support their views:

1. What are commenters' views of the Exchange's assertion that the ''proper 'market' that one should evaluate to determine whether the 'market' is inherently resistant to manipulation is the segment of the market formed by the Constituent Platforms''? [18] What are commenters' views of the Exchange's conclusion that, while bitcoin is listed and traded on a number of markets and platforms, the CME CF BRR exclusively utilizes its Constituent Platforms to determine the value of the CME CF BRR, and therefore, use of the CME CF BRR would mitigate the effects of potential manipulation of the bitcoin market? [19] Additionally, what are commenters' views of the Exchange's assertion that the capital necessary to maintain a significant presence on any Constituent Platform would make manipulation of the CME CF BRR unlikely? [20]

2. What are commenters' views of the Exchange's assertion that the CME CF BRR is not susceptible to manipulation? What are commenters' views of the Exchange's assertion that the linkage between the bitcoin markets and the presence of arbitrageurs in those markets means that the manipulation of the price of bitcoin on any Constituent Platform would likely require overcoming the liquidity supply of such arbitrageurs who are potentially eliminating any cross-market pricing differences? [21]

3. What are commenters' views of the Exchange's arguments that substantially similar price discovery and degrees of price volatility among each of the Constituent Platforms support the conclusion that robust arbitrage trading and liquidity provision occurs among the Constituent Platforms? [22]

4. What are commenters' views on whether the Constituent Platforms are regulated markets of significant size related to bitcoin? What are commenters' views on the Exchange's assertion that, because the CME CF BRR is calculated based solely on the price data from the Constituent Platforms, manipulating the CME CF BRR must necessarily entail manipulating the price data at one or more Constituent Platforms and that anyone attempting to manipulate the Trust would need to place numerous large sized trades on any of the Constituent Platforms that are used to calculate the CME CF BRR? [23] What are commenters' views on the Exchange's argument that, if an attempt were made to manipulate the Trust, the administrator for the CME CF BRR and the CME would be able to detect the manipulative trading patterns? [24] What are commenters' views on the Exchange's assertion that the CME and the Exchange would be able, in the case of any suspicious trades, to share surveillance information with the Constituent Platforms and to discover all material trade information including the identities of the customers placing the trades? [25]

5. What are commenters' views of the Exchange's assertion that the trading volume in CME bitcoin futures makes the CME a regulated market of significant size related to bitcoin? [26] Additionally, what are commenters' views of the Exchange's assertions that, in comparison, the bitcoin futures market is larger in size as a percentage of bitcoin spot trading than the size of the gold futures markets as a percentage of OTC gold trading? [27] What are commenters' views on whether there is a reasonable likelihood that a person attempting to manipulate the Shares would also have to trade on the CME to manipulate the Shares?

6. What are commenters' views on the trading relationship between the CME and the Constituent Platforms or the bitcoin spot market more broadly? For example, what is the relative size of these markets, and where does bitcoin price formation occur? Does the market, spot or futures, in which price formation occurs affect commenters' analysis of whether it is reasonably likely that someone attempting to manipulate the Shares would have to trade on the CME, or that trading in the Shares would be the predominant influence on prices on the CME?

7. What are commenters' views on the Exchange's representation that, ''given the nature of the Trust and the composition of its assets, trading in the Trust would not be the predominant influence on prices (i) that make up the CME CF BRR, (ii) in the [b]itcoin futures market on the CME, or (iii) in the USD/BTC spot market on the Constituent Platforms?'' [28] In addition, what are commenters' views on the Exchange's conclusion that, because the Trust will only purchase bitcoin if (1) required to as a result of the monthly rebalancing of its assets or (2) if it sells Shares to new investors, and will only sell bitcoin if required to as a result of the monthly rebalancing of its assets, ''trading in the Shares will not cause the Trust to purchase or sell [b]itcoin and will therefore not influence the price of [b]itcoin?'' [29]

8. According to the Exchange, (a) the level of the Index is published on each business day at approximately 5:00 p.m. Eastern time (U.S.), (b) the CME CF BRR aggregates the trade flow of the Constituent Platforms during a calculation window into the U.S. dollar price of one bitcoin as of 4:00 p.m. London time, (c) the Trust's NAV will be determined daily as of 4:00 p.m. Eastern time (U.S.), and (d) the Trust will determine the price of the Trust's bitcoin by reference to the Bitcoin Reference Rate, which is published between 4:00 p.m. and 4:30 p.m. London time. What are commenters' views on whether (and if so, how) the variation in timing with respect to the calculation and price determination of the underlying bitcoin price, Index level, and NAV would affect the susceptibility of the Shares to fraudulent and manipulative acts and practices? What are commenters' views on whether this variation in timing would affect the ability of arbitrage to keep the price of the Shares aligned with the value of the portfolio at all times during the trading day?

9. What are commenters' views on the requirement that shareholders may redeem all or a portion of its Shares only on the last business day of each calendar month? [30] What are commenters' views on whether this restriction on redemptions would affect the ability of arbitrage to keep the price of the Shares aligned with the value of the portfolio continuously during the trading day over each monthly period? What are commenters' views on whether this restriction on redemptions would affect the resistance of the Shares to manipulation?

[17] *See* Notice, *supra* note 3.

[18] *See id.* at 31378.

[19] *See id.* at 31383.

[20] *See id.* at 31379.

[21] *See id.* (''The linkage between the [b]itcoin markets and the presence of arbitrageurs . . . in those markets means that the manipulation of the price of [b]itcoin on any Constituent Platform would likely require overcoming the liquidity supply of such arbitrageurs who are potentially eliminating any cross-market pricing differences.'').

[22] *See id.* at 31378–79.

[23] *See id.* at 31380 & n.50.

[24] *See id.* at 31380 & n.51.

[25] *See id.* at 31380.

[26] *See id.*

[27] *See id.*

[28] *See id.* at 31381.

[29] *See id.*

[30] *See supra* note 13 and accompanying text.

III. Procedure: Request for Written Comments

The Commission requests that interested persons provide written submissions of their views, data, and arguments with respect to the issues identified above, as well as any other concerns they may have with the proposal. In particular, the Commission invites the written views of interested persons concerning whether the proposal is consistent with Section 6(b)(5) or any other provision of the Act, and the rules and regulations thereunder. Although there do not appear to be any issues relevant to approval or disapproval that would be facilitated by an oral presentation of views, data, and arguments, the Commission will consider, pursuant to Rule 19b–4, any request for an opportunity to make an oral presentation.[31]

Interested persons are invited to submit written data, views, and arguments regarding whether the proposal should be approved or disapproved by October 21, 2019. Any person who wishes to file a rebuttal to any other person's submission must file that rebuttal by November 4, 2019.

Comments may be submitted by any of the following methods:

Electronic Comments

- Use the Commission's internet comment form (*http://www.sec.gov/rules/sro.shtml*); or
- Send an email to *rule-comments@sec.gov.* Please include File Number SR–NYSEArca–2019–39 on the subject line.

Paper Comments

- Send paper comments in triplicate to Secretary, Securities and Exchange Commission, 100 F Street NE, Washington, DC 20549–1090.

All submissions should refer to File Number SR–NYSEArca–2019–39. This file number should be included on the subject line if email is used. To help the Commission process and review your comments more efficiently, please use only one method. The Commission will post all comments on the Commission's internet website (*http://www.sec.gov/rules/sro.shtml*). Copies of the submission, all subsequent amendments, all written statements with respect to the proposed rule change that are filed with the Commission, and all written communications relating to the proposed rule change between the Commission and any person, other than those that may be withheld from the public in accordance with the provisions of 5 U.S.C. 552, will be available for website viewing and printing in the Commission's Public Reference Room, 100 F Street NE, Washington, DC 20549 on official business days between the hours of 10:00 a.m. and 3:00 p.m. Copies of the filing also will be available for inspection and copying at the principal office of the Exchange. All comments received will be posted without change. Persons submitting comments are cautioned that we do not redact or edit personal identifying information from comment submissions. You should submit only information that you wish to make available publicly. All submissions should refer to File Number SR–NYSEArca–2019–39 and should be submitted by October 21, 2019. Rebuttal comments should be submitted by November 4, 2019.

For the Commission, by the Division of Trading and Markets, pursuant to delegated authority.[32]

Jill M. Peterson,

Assistant Secretary.

[FR Doc. 2019–21097 Filed 9–27–19; 8:45 am]

BILLING CODE 8011–01–P

[31] Section 19(b)(2) of the Act, as amended by the Securities Act Amendments of 1975, Public Law 94–29 (June 4, 1975), grants the Commission flexibility to determine what type of proceeding—either oral or notice and opportunity for written comments—is appropriate for consideration of a particular proposal by a self-regulatory organization. *See* Securities Act Amendments of 1975, Senate Comm. on Banking, Housing & Urban Affairs, S. Rep. No. 75, 94th Cong., 1st Sess. 30 (1975).

[32] 17 CFR 200.30–3(a)(57).

SECURITIES AND EXCHANGE COMMISSION

[Release No. 34–87095; File No. SR–CboeBZX–2019–083]

Self-Regulatory Organizations; Cboe BZX Exchange, Inc.; Notice of Filing of a Proposed Rule Change Regarding Certain Changes to Investments of the Aptus Collared Income Opportunity ETF, a Series of ETF Series Solutions

September 24, 2019.

Pursuant to Section 19(b)(1) of the Securities Exchange Act of 1934 (the ''Act''),[1] and Rule 19b–4 thereunder,[2] notice is hereby given that on September 16, 2019, Cboe BZX Exchange, Inc. (the ''Exchange'' or ''BZX'') filed with the Securities and Exchange Commission (the ''Commission'') the proposed rule change as described in Items I and II below, which Items have been prepared by the Exchange. The Exchange filed the proposal as a ''non-controversial'' proposed rule change pursuant to Section 19(b)(3)(A)(iii) of the Act[3] and Rule 19b–4(f)(6) thereunder.[4] The Commission is publishing this notice to solicit comments on the proposed rule change from interested persons.

I. Self-Regulatory Organization's Statement of the Terms of Substance of the Proposed Rule Change

The Exchange proposes a rule change to allow the Aptus Collared Income Opportunity ETF (the ''Fund''), a series of ETF Series Solutions (the ''Trust''), to hold certain instruments in a manner that does not necessarily comply with Rule 14.11(i) (''Managed Fund Shares''). The shares of the Fund are referred to herein as the ''Shares.''

The text of the proposed rule change is also available on the Exchange's website (*http://markets.cboe.com/us/equities/regulation/rule_filings/bzx/*), at the Exchange's Office of the Secretary, and at the Commission's Public Reference Room.

II. Self-Regulatory Organization's Statement of the Purpose of, and Statutory Basis for, the Proposed Rule Change

In its filing with the Commission, the Exchange included statements concerning the purpose of and basis for the proposed rule change and discussed any comments it received on the proposed rule change. The text of these statements may be examined at the places specified in Item IV below. The Exchange has prepared summaries, set forth in sections A, B, and C below, of the most significant aspects of such statements.

A. Self-Regulatory Organization's Statement of the Purpose of, and Statutory Basis for, the Proposed Rule Change

1. Purpose

The Shares are currently listed on the Exchange pursuant to the generic listing standards applicable to Managed Fund Shares under Rule 14.11(i)[5] (the ''Generic Listing Standards'') and began trading on July 10, 2019. While the Fund currently meets all of the Generic Listing Standards, the Adviser would like to increase the flexibility of the Fund's holdings in a way that might not meet such requirements. As such, the Exchange submits this proposal in order

[1] 15 U.S.C. 78s(b)(1).

[2] 17 CFR 240.19b–4.

[3] 15 U.S.C. 78s(b)(3)(A)(iii).

[4] 17 CFR 240.19b–4(f)(6).

[5] The Commission approved Rule 14.11(i) in Securities Exchange Act Release No. 65225 (August 30, 2011), 76 FR 55148 (September 6, 2011) (SR–BATS–2011–018).

to allow the Shares to continue listing and trading on the Exchange while holding certain listed derivatives in a manner that may not comply with Rule 14.11(i)(4)(C)(iv)(b).[6] Specifically, the Exchange is proposing to allow the Fund to hold options on the S&P 500 Index (''SPX Options'') and/or options on the SPDR S&P 500 ETF Trust (''SPY'') (''SPY Options'' and, collectively with SPX Options, ''S&P 500 Options'') in a manner that exceeds both the 30% Limit and the 65% Limit. Otherwise, the Fund will continue to comply with all other listing standards on an initial and continued listing basis under Rule 14.11(i). As noted above, the Fund currently meets the Generic Listing Standards and will continue to meet the Generic Listing Standards until and unless this proposal becomes operative.

The Exchange notes that the proposed exceptions to the Generic Listing Standards included in this proposal are substantively identical to exceptions previously approved by the Commission and do not raise any new issues that the Commission has not previously contemplated.[7]

The Shares are offered by the Trust, which was established as a Delaware statutory trust on February 9, 2012.[8] The Trust is registered with the Commission as an open-end investment company and has filed a registration statement on behalf of the Fund on Form N–1A (''Registration Statement'') with the Commission.[9] Aptus Capital Advisors, LLC (the ''Adviser'') serves as investment adviser to the Fund. Rule 14.11(i)(7) provides that, if the investment adviser to the investment company issuing Managed Fund Shares is affiliated with a broker-dealer, such investment adviser shall erect a ''fire wall'' between the investment adviser and the broker-dealer with respect to access to information concerning the composition and/or changes to such investment company portfolio.[10] In addition, Rule 14.11(i)(7) further requires that personnel who make decisions on the investment company's portfolio composition must be subject to procedures designed to prevent the use and dissemination of material nonpublic information regarding the applicable investment company portfolio. The Adviser is not a broker-dealer and is not affiliated with a broker-dealer. In addition, Adviser personnel who make decisions regarding the Fund's portfolio are subject to procedures designed to prevent the use and dissemination of material nonpublic information regarding the Fund's portfolio. In the event that (a) the Adviser becomes registered as a broker-dealer or newly affiliated with a broker-dealer, or (b) any new adviser or sub-adviser is a registered broker-dealer or becomes affiliated with a broker-dealer, it will implement and maintain a fire wall with respect to its relevant personnel or such broker-dealer affiliate, as applicable, regarding access to information concerning the composition and/or changes to the portfolio, and will be subject to procedures designed to prevent the use and dissemination of material non-public information regarding such portfolio.

Aptus Collared Income Opportunity ETF

According to the Registration Statement, the Fund seeks current income and capital appreciation. The Fund is an actively-managed exchange-traded fund (''ETF'') that seeks to achieve its investment objective principally by investing in a portfolio of large capitalization U.S.-listed equity securities and an options collar (*i.e.,* a mix of written (sold) call options and long (bought) put options) on the same underlying equity securities. The equity securities and options held by the Fund must be listed on a U.S.-exchange.

The Adviser selects the Fund's equity securities based on the Adviser's assessment of the likelihood that the dividends paid by the issuer will increase or remain stable and based on the liquidity of the options available for such security. The Adviser considers factors primarily related to yield, earnings growth, revenue growth, and distribution history in assessing the likelihood that the dividends paid by an issuer will increase or remain stable. The Fund's portfolio will typically consist of approximately 30 equity securities across a variety of industries, with generally no more than 30% of the Fund's net assets invested in companies in a single sector. The Fund's options collar strategy typically consists of two components: (i) Selling covered call options on up to 100% of the equity securities held by the Fund to generate premium from such options, while (ii) simultaneously reinvesting a portion of such premium to buy put options on all or a significant portion of an equity position held by the Fund to ''hedge'' or mitigate the downside risk associated with owning equity securities. The Fund seeks to generate income from the combination of dividends received from the equity securities held by the Fund and premiums received from the sale of options.

The equity securities held by the Fund will meet the requirements of Rule 14.11(i)(4)(C)(i)(a) and the single equity options contracts will meet the requirements of Rule 14.11(i)(4)(C)(iv)(a) and (b).

In addition to the above described principal investment strategy, the Fund may also invest in a ''bull call spread'' options strategy as a non-principal investment strategy. The Fund's bull call spread strategy entails (i) the purchase of at-the-money call S&P 500 Options (*i.e.,* call options with a strike price roughly equal to the current price

[6] Rule 14.11(i)(4)(C)(iv)(b) provides that ''the aggregate gross notional value of listed derivatives based on any five or fewer underlying reference assets shall not exceed 65% of the weight of the portfolio (including gross notional exposures) (the ''65% Limit''), and the aggregate gross notional value of listed derivatives based on any single underlying reference asset shall not exceed 30% of the weight of the portfolio (including gross notional exposures) (the ''30% Limit'').''

[7] The Exchange notes that this proposal is very similar to several previously submitted proposals to list and trade a series of Index Fund Shares (which are referred to as Investment Company Units under the rules of NYSE Arca, Inc.) and Managed Fund Shares with exposures to a single underlying reference asset that were either approved by the Commission or effective upon filing. *See* Securities Exchange Act Release Nos. 83146 (May 1, 2018), 83 FR 20103 (May 7, 2018) (SR–CboeBZX–2018–029); 83679 (July 20, 2018), 83 FR 35505 (July 26, 2018); 77045 (February 3, 2016), 81 FR 6916 (February 9, 2016) (SR–NYSEArca–2015–113) (the ''Amendment''); and 74675 (April 8, 2015), 80 FR 20038 (April 14, 2015) (SR–NYSEArca–2015–05) (collectively, with the Amendment, the ''Arca Filing'').

[8] The Commission has issued an order, upon which the Trust may rely, granting certain exemptive relief under the 1940 Act. *See* Investment Company Act Release No. 32110 (May 10, 2016) (File No. 812–14604).

[9] *See* Registration Statement on Form N–1A for the Trust, dated April 26, 2019 (File Nos. 333–179562 and 811–22668). The descriptions of the Fund and the Shares contained herein are based, in part, on information in the Registration Statement.

[10] An investment adviser to an open-end fund is required to be registered under the Investment Advisers Act of 1940 (the ''Advisers Act''). As a result, the Adviser and its related personnel are subject to the provisions of Rule 204A–1 under the Advisers Act relating to codes of ethics. This Rule requires investment advisers to adopt a code of ethics that reflects the fiduciary nature of the relationship to clients as well as compliance with other applicable securities laws. Accordingly, procedures designed to prevent the communication and misuse of non-public information by an investment adviser must be consistent with Rule 204A–1 under the Advisers Act. In addition, Rule 206(4)–7 under the Advisers Act makes it unlawful for an investment adviser to provide investment advice to clients unless such investment adviser has (i) adopted and implemented written policies and procedures reasonably designed to prevent violation, by the investment adviser and its supervised persons, of the Advisers Act and the Commission rules adopted thereunder; (ii) implemented, at a minimum, an annual review regarding the adequacy of the policies and procedures established pursuant to subparagraph (i) above and the effectiveness of their implementation; and (iii) designated an individual (who is a supervised person) responsible for administering the policies and procedures adopted under subparagraph (i) above.

of the underlying asset); and (ii) writing (selling) out-of-the-money call S&P 500 Options (*i.e.,* call options with a strike price higher than the current price of the underlying asset). The Adviser expects to generally invest less than 5% of the Fund's net assets in the bull call spread options strategy, however, the gross notional value of such positions may exceed the 30% Limit and the 65% Limit.

S&P 500 Options

The market for options contracts on the S&P 500 Index traded on Cboe Exchange, Inc. (''Cboe Options'') is among the most liquid markets in the world. In August 2019, approximately 1.488 million options contracts on the S&P 500 Index were traded per day, which is more than $430 billion in notional volume traded on a daily basis. Similarly, more than 75 million options contracts referencing SPY were traded in August 2019, representing more than $105 billion in notional volume on a daily basis. The Exchange believes that sufficient protections are in place to protect against market manipulation of the Fund's Shares and S&P 500 Options for several reasons: (i) The diversity, liquidity, and market cap of the securities underlying the S&P 500 Index; (ii) the significant liquidity in the market for SPX Options and SPY Options; and (iii) surveillance by the Exchange, Cboe Options, other U.S. options exchanges, and the Financial Industry Regulatory Authority (''FINRA'') designed to detect violations of the federal securities laws and self-regulatory organization (''SRO'') rules. The Exchange has in place a surveillance program for transactions in ETFs to ensure the availability of information necessary to detect and deter potential manipulations and other trading abuses, thereby making the Shares less readily susceptible to manipulation. Further, the Exchange believes that because the S&P 500 Options in the Fund's portfolio will be acquired in extremely liquid and highly regulated markets,[11] the Shares are less readily susceptible to manipulation.

The Exchange believes that its surveillance procedures are adequate to properly monitor the trading of the Shares on the Exchange during all trading sessions and to deter and detect violations of Exchange rules and the applicable federal securities laws. Trading of the Shares through the Exchange will be subject to the Exchange's surveillance procedures for derivative products, including Managed Fund Shares. All statements and representations made in this filing regarding (a) the description of the portfolio and reference assets, (b) limitations on portfolio holdings or reference assets, or (c) the applicability of Exchange rules shall constitute continued listing requirements for listing the Shares on the Exchange. The issuer has represented to the Exchange that it will advise the Exchange of any failure by the Fund or the Shares to comply with the continued listing requirements, and, pursuant to its obligations under Section 19(g)(1) of the Act, the Exchange will surveil for compliance with the continued listing requirements. If the Fund or the Shares are not in compliance with the applicable listing requirements, then the Exchange will commence delisting procedures under Exchange Rule 14.12. FINRA conducts certain cross-market surveillances on behalf of the Exchange pursuant to a regulatory services agreement. The Exchange is responsible for FINRA's performance under this regulatory services agreement. If the Fund is not in compliance with the applicable listing requirements, the Exchange will commence delisting procedures for the Fund under Exchange Rule 14.12.

The Exchange or FINRA, on behalf of the Exchange, will communicate as needed regarding trading in the Shares and exchange-traded options contracts with other markets and other entities that are members of the ISG and may obtain trading information regarding trading in the Shares as well as the equities and exchange-traded options contracts held by the Fund from such markets and other entities. In addition, the Exchange may obtain information regarding trading in the Shares, equities, and exchange-traded options contracts from markets and other entities that are members of ISG or with which the Exchange has in place a comprehensive surveillance sharing agreement. In addition, the Exchange also has a general policy prohibiting the distribution of material, non-public information by its employees.

As noted above, SPX Options and SPY Options are among the most liquid options in the world and derive their value from the actively traded S&P 500 Index components. The contracts trade in competitive auction markets with price and quote transparency. The Exchange believes the highly regulated options markets and the broad base and scope of the S&P 500 Index make securities that derive their value from that index less susceptible to market manipulation in view of market capitalization and liquidity of the S&P 500 Index components, the market cap and liquidity of SPY, price and quote transparency, and arbitrage opportunities.

The Exchange believes that the liquidity of the markets for SPY, S&P 500 Index securities, SPX Options, and SPY Options, and other related derivatives is sufficiently great to deter fraudulent or manipulative acts associated with the price of the Shares. The Exchange also believes that such liquidity is sufficient to support the creation and redemption mechanism. Coupled with the extensive surveillance programs of the SROs described above, the Exchange does not believe that trading in the Shares would present manipulation concerns.

The Exchange represents that, except for the limitations on listed derivatives in BZX Rule 14.11(i)(4)(C)(iv)(b), the Fund's proposed investments will satisfy, on an initial and continued listing basis, all of the generic listing standards under BZX Rule 14.11(i)(4)(C) and all other applicable requirements for Managed Fund Shares under Rule 14.11(i). The Trust is required to comply with Rule 10A–3 under the Act for the initial and continued listing of the Shares of the Fund. In addition, the Exchange represents that the Shares of the Fund will continue to comply with all other requirements applicable to Managed Fund Shares, which includes the dissemination of key information such as the Disclosed Portfolio,[12] Net Asset Value,[13] and the Intraday Indicative Value,[14] suspension of trading or removal,[15] trading halts,[16] surveillance,[17] minimum price variation for quoting and order entry,[18] and the information circular,[19] as set forth in Exchange rules applicable to Managed Fund Shares. Further, all statements or representations regarding the description of the portfolio or reference assets, limitations on portfolio holdings or reference assets, dissemination and availability of index, reference asset, and intraday indicative values, or the applicability of Exchange listing rules shall constitute continued listing

[11] All exchange-listed securities that the Fund may hold will trade on a market that is a member of the Intermarket Surveillance Group (''ISG'') and the Fund will not hold any non-exchange-listed equities or options, however, not all of the components of the portfolio for the Fund may trade on exchanges that are members of the ISG or with which the Exchange has in place a comprehensive surveillance sharing agreement. For a list of the current members of ISG, see *www.isgportal.org.*

[12] *See* Rule 14.11(i)(4)(A)(ii) and 14.11(i)(4)(B)(ii).

[13] *See* Rule 14.11(i)(4)(A)(ii).

[14] *See* Rule 14.11(i)(4)(B)(i).

[15] *See* Rule 14.11(i)(4)(B)(iii).

[16] *See* Rule 14.11(i)(4)(B)(iv).

[17] *See* Rule 14.11(i)(2)(C).

[18] *See* Rule 14.11(i)(2)(B).

[19] *See* Rule 14.11(i)(6).

requirements for the Fund. Moreover, all of the options contracts held by the Fund will trade on markets that are a member of ISG or affiliated with a member of ISG or with which the Exchange has in place a comprehensive surveillance sharing agreement. Quotation and last sale information for U.S. exchange-listed options contracts cleared by The Options Clearing Corporation will be available via the Options Price Reporting Authority. The intra-day, closing and settlement prices of exchange-traded options will be readily available from the options exchanges, automated quotation systems, published or other public sources, or online information services such as Bloomberg or Reuters. Price information on cash equivalents is available from major broker-dealer firms or market data vendors, as well as from automated quotation systems, published or other public sources, or online information services.

2. Statutory Basis

The Exchange believes that the proposal is consistent with Section 6(b) of the Act [20] in general and Section 6(b)(5) of the Act [21] in particular in that it is designed to prevent fraudulent and manipulative acts and practices, to promote just and equitable principles of trade, to foster cooperation and coordination with persons engaged in facilitating transactions in securities, to remove impediments to and perfect the mechanism of a free and open market and a national market system and, in general, to protect investors and the public interest, because, as noted above, the Shares will meet each of the initial and continued listing criteria in BZX Rule 14.11(i) with the exception of Rule 14.11(i)(4)(C)(iv)(b), which requires that the aggregate gross notional value of listed derivatives based on any five or fewer underlying reference assets shall not exceed 65% of the weight of the portfolio (including gross notional exposures), and the aggregate gross notional value of listed derivatives based on any single underlying reference asset shall not exceed 30% of the weight of the portfolio (including gross notional exposures).[22] Rule 14.11(i)(4)(C)(iv)(b) is intended to ensure that the Fund is not subject to manipulation by virtue of significant exposure to a manipulable underlying reference asset by establishing concentration limits among the underlying reference assets for listed derivatives held by a particular fund.

The Exchange believes that sufficient protections are in place to protect against market manipulation of the Fund's Shares and S&P 500 Options for several reasons: (i) The diversity, liquidity, and market cap of the securities underlying the S&P 500 Index; (ii) the significant liquidity in the market for SPX Options and SPY Options; and (iii) surveillance by the Exchange, Cboe Options, other U.S. options exchanges, and FINRA designed to detect violations of the federal securities laws and SRO rules. The Exchange has in place a surveillance program for transactions in ETFs to ensure the availability of information necessary to detect and deter potential manipulations and other trading abuses, thereby making the Shares less readily susceptible to manipulation. Further, the Exchange believes that because the assets in the Fund's portfolio, which are comprised primarily of S&P 500 Options, will be acquired in extremely liquid and highly regulated markets, the Shares are less readily susceptible to manipulation.

The Exchange believes that its surveillance procedures are adequate to properly monitor the trading of the Shares on the Exchange during all trading sessions and to deter and detect violations of Exchange rules and the applicable federal securities laws. Trading of the Shares through the Exchange will be subject to the Exchange's surveillance procedures for derivative products, including Managed Fund Shares. All statements and representations made in this filing regarding (a) the description of the portfolio and reference assets, (b) limitations on portfolio holdings or reference assets, or (c) the applicability of Exchange rules shall constitute continued listing requirements for listing the Shares on the Exchange. The issuer has represented to the Exchange that it will advise the Exchange of any failure by the Fund or the Shares to comply with the continued listing requirements, and, pursuant to its obligations under Section 19(g)(1) of the Act, the Exchange will surveil for compliance with the continued listing requirements. If the Fund or the Shares are not in compliance with the applicable listing requirements, then the Exchange will commence delisting procedures under Exchange Rule 14.12. FINRA conducts certain cross-market surveillances on behalf of the Exchange pursuant to a regulatory services agreement. The Exchange is responsible for FINRA's performance under this regulatory services agreement. If the Fund is not in compliance with the applicable listing requirements, the Exchange will commence delisting procedures for the Fund under Exchange Rule 14.12.

The Exchange or FINRA, on behalf of the Exchange, will communicate as needed regarding trading in the Shares and exchange-traded options contracts with other markets and other entities that are members of the ISG and may obtain trading information regarding trading in the Shares and exchange-traded options contracts from such markets and other entities. In addition, the Exchange may obtain information regarding trading in the Shares and exchange-traded options contracts from markets and other entities that are members of ISG or with which the Exchange has in place a comprehensive surveillance sharing agreement. In addition, the Exchange also has a general policy prohibiting the distribution of material, non-public information by its employees. As noted above, SPX Options and SPY Options are among the most liquid options in the world and derive their value from the actively traded S&P 500 Index components. The Exchange believes the highly regulated options markets and the broad base and scope of the S&P 500 Index make securities that derive their value from that index less susceptible to market manipulation in view of market capitalization and liquidity of the S&P 500 Index components, the market cap and liquidity of SPY, price and quote transparency, and arbitrage opportunities.

The Exchange believes that the liquidity of the markets for S&P 500 Index securities, SPY, SPX Options and SPY Options, and other related derivatives is sufficiently great to deter fraudulent or manipulative acts associated with the Fund's Shares price. The Exchange also believes that such liquidity is sufficient to support the creation and redemption mechanism. Coupled with the extensive surveillance programs of the SROs described above, the Exchange does not believe that trading in the Fund's Shares would present manipulation concerns.

The Exchange represents that, except as described above, the Fund will meet and be subject to all other requirements of the Generic Listing Standards and

[20] 15 U.S.C. 78f.

[21] 15 U.S.C. 78f(b)(5).

[22] As noted above, the Exchange is submitting this proposal because the Fund would not meet the requirements of Rule 14.11(i)(4)(C)(iv)(b) which prevents the aggregate gross notional value of listed derivatives based on any single underlying reference asset from exceeding 30% of the weight of the portfolio (including gross notional exposures) and the aggregate gross notional value of listed derivatives based on any five or fewer underlying reference assets from exceeding 65% of the weight of the portfolio (including gross notional exposures).

other applicable continued listing requirements for Managed Fund Shares under Rule 14.11(i), including those requirements regarding the Disclosed Portfolio,[23] Intraday Indicative Value,[24] suspension of trading or removal,[25] trading halts,[26] disclosure,[27] and firewalls.[28] The Trust is required to comply with Rule 10A–3 under the Act for the initial and continued listing of the Shares of the Fund. Moreover, all of the options contracts held by the Fund will trade on markets that are a member of ISG or affiliated with a member of ISG or with which the Exchange has in place a comprehensive surveillance sharing agreement.

Finally, this proposal would allow the Fund to hold S&P 500 Options in a manner that is generally consistent with other series of Index Fund Shares and Managed Fund Shares based on filings that were either effective upon filing or that the Commission has approved for listing and trading that also did not satisfy the applicable generic listing standards. Specifically, the proposal is seeking similar exposure as was approved by the Commission in the Arca Filing, which allowed the listing of a fund based on an index with significant exposure to SPX Options. As such, the Exchange believes the proposed rule change will not significantly affect the protection of investors or the public interest because the proposal contains no new issues that the Commission has not previously contemplated.

For the above reasons, the Exchange believes that the proposed rule change is consistent with the requirements of Section 6(b)(5) of the Act.

B. Self-Regulatory Organization's Statement on Burden on Competition

The Exchange does not believe that the proposed rule change will impose any burden on competition that is not necessary or appropriate in furtherance of the purpose of the Act. The Exchange notes that the proposed rule change will allow the Fund to fully implement its options strategy, which will enhance competition among market participants, to the benefit of investors and the marketplace.

[23] *See* Rule 14.11(i)(4)(B)(ii).

[24] *See* Rule 14.11(i)(4)(B)(i).

[25] *See* Rule 14.11(i)(4)(B)(iii).

[26] *See* Rule 14.11(i)(4)(B)(iv).

[27] *See* Rule 14.11(i)(6).

[28] *See* Rule 14.11(i)(7).

C. Self-Regulatory Organization's Statement on Comments on the Proposed Rule Change Received From Members, Participants, or Others

The Exchange has neither solicited nor received written comments on the proposed rule change.

III. Date of Effectiveness of the Proposed Rule Change and Timing for Commission Action

Because the foregoing proposed rule change does not: (i) Significantly affect the protection of investors or the public interest; (ii) impose any significant burden on competition; and (iii) become operative for 30 days from the date on which it was filed, or such shorter time as the Commission may designate, it has become effective pursuant to Section 19(b)(3)(A) of the Act [29] and Rule 19b–4(f)(6) thereunder.[30]

A proposed rule change filed pursuant to Rule 19b–4(f)(6) under the Act [31] normally does not become operative for 30 days after the date of its filing. However, Rule 19b–4(f)(6)(iii) [32] permits the Commission to designate a shorter time if such action is consistent with the protection of investors and the public interest. The Exchange has requested that the Commission waive the 30-day operative delay so that the proposed rule change may become operative upon filing. The Exchange believes that the proposal will enhance competition among both market participants and listing venues to the benefit of investors and the marketplace by providing additional flexibility for the options strategy of the Fund. Further, the Exchange believes that the proposed rule change will not significantly affect the protection of investors or the public interest because the proposal does not raise any new issues that the Commission has not previously contemplated. The Commission believes that waiver of the 30-day operative delay is consistent with the protection of investors and the public interest. Accordingly, the Commission hereby waives the operative delay and designates the proposed rule change operative upon filing.[33]

[29] 15 U.S.C. 78s(b)(3)(A).

[30] 17 CFR 240.19b–4(f)(6). In addition, Rule 19b–4(f)(6)(iii) requires a self-regulatory organization to give the Commission written notice of its intent to file the proposed rule change, along with a brief description and text of the proposed rule change, at least five business days prior to the date of filing of the proposed rule change, or such shorter time as designated by the Commission. The Exchange has satisfied this requirement.

[31] 17 CFR 240.19b–4(f)(6).

[32] 17 CFR 240.19b–4(f)(6)(iii).

[33] For purposes only of waiving the 30-day operative delay, the Commission also has considered the proposed rule's impact on efficiency, competition, and capital formation. *See* 15 U.S.C. 78c(f).

At any time within 60 days of the filing of the proposed rule change, the Commission summarily may temporarily suspend such rule change if it appears to the Commission that such action is necessary or appropriate in the public interest, for the protection of investors, or otherwise in furtherance of the purposes of the Act. If the Commission takes such action, the Commission shall institute proceedings to determine whether the proposed rule change should be approved or disapproved.

IV. Solicitation of Comments

Interested persons are invited to submit written data, views, and arguments concerning the foregoing, including whether the proposed rule change is consistent with the Act. Comments may be submitted by any of the following methods:

Electronic Comments

- Use the Commission's internet comment form (*http://www.sec.gov/rules/sro.shtml*); or
- Send an email to *rule-comments@sec.gov.* Please include File Number SR–CboeBZX–2019–083 on the subject line.

Paper Comments

- Send paper comments in triplicate to Secretary, Securities and Exchange Commission, 100 F Street NE, Washington, DC 20549–1090.

All submissions should refer to File Number SR–CboeBZX–2019–083. This file number should be included on the subject line if email is used. To help the Commission process and review your comments more efficiently, please use only one method. The Commission will post all comments on the Commission's internet website (*http://www.sec.gov/rules/sro.shtml*). Copies of the submission, all subsequent amendments, all written statements with respect to the proposed rule change that are filed with the Commission, and all written communications relating to the proposed rule change between the Commission and any person, other than those that may be withheld from the public in accordance with the provisions of 5 U.S.C. 552, will be available for website viewing and printing in the Commission's Public Reference Room, 100 F Street NE, Washington, DC 20549 on official business days between the hours of 10:00 a.m. and 3:00 p.m. Copies of the filing also will be available for

inspection and copying at the principal office of the Exchange. All comments received will be posted without change. Persons submitting comments are cautioned that we do not redact or edit personal identifying information from comment submissions. You should submit only information that you wish to make available publicly. All submissions should refer to File Number SR–CboeBZX–2019–083, and should be submitted on or before October 21, 2019.

For the Commission, by the Division of Trading and Markets, pursuant to delegated authority.[34]

Jill M. Peterson,

Assistant Secretary.

[FR Doc. 2019–21094 Filed 9–27–19; 8:45 am]

BILLING CODE 8011–01–P

[34] 17 CFR 200.30–3(a)(12).

SECURITIES AND EXCHANGE COMMISSION

Submission for OMB Review; Comment Request

Upon Written Request, Copies Available From: Securities and Exchange Commission, Office of FOIA Services, 100 F Street NE, Washington, DC 20549–2736.

Extension:

Rule 12d3–1, SEC File No. 270–504, OMB Control No. 3235–0561.

Notice is hereby given that, pursuant to the Paperwork Reduction Act of 1995 (44 U.S.C. 3501 *et seq.*), the Securities and Exchange Commission (the ''Commission'') has submitted to the Office of Management and Budget (''OMB'') a request for extension of the previously approved collection of information discussed below.

Section 12(d)(3) of the Investment Company Act of 1940 (15 U.S.C. 80a) generally prohibits registered investment companies (''funds''), and companies controlled by funds, from purchasing securities issued by a registered investment adviser, broker, dealer, or underwriter (''securities-related businesses''). Rule 12d3–1 (''Exemption of acquisitions of securities issued by persons engaged in securities related businesses'' (17 CFR 270.12d3–1)) permits a fund to invest up to five percent of its assets in securities of an issuer deriving more than fifteen percent of its gross revenues from securities-related businesses, but a fund may not rely on rule 12d3–1 to acquire securities of its own investment adviser or any affiliated person of its own investment adviser.

A fund may, however, rely on an exemption in rule 12d3–1 to acquire securities issued by its subadvisers in circumstances in which the subadviser would have little ability to take advantage of the fund, because it is not in a position to direct the fund's securities purchases. The exemption in rule 12d3–1 is available if (i) the subadviser is not, and is not an affiliated person of, an investment adviser that provides advice with respect to the portion of the fund that is acquiring the securities, and (ii) the advisory contracts of the subadviser, and any subadviser that is advising the purchasing portion of the fund, prohibit them from consulting with each other concerning securities transactions of the fund, and limit their responsibility in providing advice to providing advice with respect to discrete portions of the fund's portfolio.

Based on an analysis of fund filings, the staff estimates that approximately 216 fund portfolios enter into subadvisory agreements each year.[1] Based on discussions with industry representatives, the staff estimates that it will require approximately 3 attorney hours to draft and execute additional clauses in new subadvisory contracts in order for funds and subadvisers to be able to rely on the exemptions in rule 12d3–1. Because these additional clauses are identical to the clauses that a fund would need to insert in their subadvisory contracts to rely on rules 10f–3, 17a–10, and 17e–1 and because we believe that funds that use one such rule generally use all of these rules, we apportion this 3 hour time burden equally to all four rules. Therefore, we estimate that the burden allocated to rule 12d3–1 for this contract change would be 0.75 hours.[2] Assuming that all 216 funds that enter into new subadvisory contracts each year make the modification to their contract required by the rule, we estimate that the rule's contract modification requirement will result in 182 burden hours annually.[3]

The estimate of average burden hours is made solely for the purposes of the Paperwork Reduction Act. The estimate is not derived from a comprehensive or even a representative survey or study of the costs of Commission rules. Complying with this collection of information requirement is necessary to obtain the benefit of relying on rule 12d3–1. Responses will not be kept confidential. An agency may not conduct or sponsor, and a person is not required to respond to, a collection of information unless it displays a currently valid control number.

The public may view the background documentation for this information collection at the following website, *www.reginfo.gov.* Comments should be directed to: (i) Desk Officer for the Securities and Exchange Commission, Office of Information and Regulatory Affairs, Office of Management and Budget, Room 10102, New Executive Office Building, Washington, DC 20503, or by sending an email to: *Lindsay.M.Abate@omb.eop.gov;* and (ii) Charles Riddle, Acting Director/Chief Information Officer, Securities and Exchange Commission, c/o Candace Kenner, 100 F Street NE, Washington, DC 20549 or send an email to: *PRA_Mailbox@sec.gov.* Comments must be submitted to OMB within 30 days of this notice.

Dated: September 24, 2019.

Jill M. Peterson,

Assistant Secretary.

[FR Doc. 2019–21084 Filed 9–27–19; 8:45 am]

BILLING CODE 8011–01–P

[1] Based on data from Morningstar Direct, as of December 31, 2018, there are 12,459 registered funds (open-end funds, closed-end funds, and exchange-traded funds), 4,615 of which have subadvisory relationships (approximately 37%). 583 new funds were established in 2018. 583 new funds × 37% = 216 funds.

[2] This estimate is based on the following calculation (3 hours ÷ 4 rules = .75 hours).

[3] This estimate is based on the following calculation: (0.75 hours × 216 portfolios = 182 burden hours).

SECURITIES AND EXCHANGE COMMISSION

[Release No. 34–87092; File No. SR–CboeBZX–2019–082]

Self-Regulatory Organizations; Cboe BZX Exchange, Inc.; Notice of Filing and Immediate Effectiveness of a Proposed Rule Change To Amend the Fees Applicable to Physical Connectivity

September 24, 2019.

Pursuant to Section 19(b)(1) of the Securities Exchange Act of 1934 (the ''Act''),[1] and Rule 19b–4 thereunder,[2] notice is hereby given that, on September 10, 2019, Cboe BZX Exchange, Inc. (the ''Exchange'' or ''BZX'') filed with the Securities and Exchange Commission (''Commission'') the proposed rule change as described in Items I, II, and III below, which Items have been prepared by the Exchange. The Commission is publishing this notice to solicit comments on the

[1] 15 U.S.C. 78s(b)(1).

[2] 17 CFR 240.19b–4.

proposed rule change from interested persons.

I. Self-Regulatory Organization's Statement of the Terms of Substance of the Proposed Rule Change

The Exchange proposes a rule change to waive the fees for a single 1 gigabyte physical port in its secondary data center for Members that are registered as an LMM on the Exchange for the first twelve months following the Member establishing physical connectivity to the secondary data center.

The text of the proposed rule change is also available on the Exchange's website (*http://markets.cboe.com/us/equities/regulation/rule_filings/bzx/*), at the Exchange's Office of the Secretary, and at the Commission's Public Reference Room.

II. Self-Regulatory Organization's Statement of the Purpose of, and Statutory Basis for, the Proposed Rule Change

In its filing with the Commission, the Exchange included statements concerning the purpose of and basis for the proposed rule change and discussed any comments it received on the proposed rule change. The text of these statements may be examined at the places specified in Item IV below. The Exchange has prepared summaries, set forth in sections A, B, and C below, of the most significant aspects of such statements.

A. Regulatory Organization's Statement of the Purpose of, and Statutory Basis for, the Proposed Rule Change

1. Purpose

The Exchange proposes to implement proposed changes to its fee schedule relating to physical connectivity fees in its secondary data center, effective September 10, 2019. Specifically, the Exchange is proposing to waive the fees for a single 1 gigabyte physical port that is connected solely to the secondary data center for the Exchange's cash equities trading platform (''BZX Equities'') for Members that are registered as an LMM on the Exchange for the first twelve months following the Member establishing physical connectivity to the secondary data center.[3]

By way of background, a physical port is utilized by a Member or non-Member to connect to the Exchange at the data centers where the Exchange's servers are located. The Exchange currently maintains a presence in two third-party data centers: (i) The primary data center where the Exchange's business is primarily conducted on a daily basis, and (ii) a secondary data center, which is predominantly maintained for business continuity purposes. The Exchange currently assesses fees of $2,000 per physical port for a 1 gigabyte circuit for Members and non-Members to connect to its secondary data center on a monthly basis.[4]

Pursuant to Regulation Systems Compliance and Integrity,[5] Exchange Rule 2.4(b)(2) requires all active Lead Market Makers (''LMMs''),[6] to connect to the Exchange's secondary data center and to participate in functional and performance testing on an annual basis [7] and, as such, in order to become an LMM on the Exchange, a Member would be required to pay all fees associated with connecting to the secondary data center.

LMMs play an important role in the Exchange's listing program by providing significant liquidity and enhanced market quality in BZX-listed securities. There is significant competition among listing venues to attract, retain, and incentivize liquidity provision by LMMs.[8] Increasing the number of LMMs on the Exchange and enhancing the competition among LMMs is particularly important because it further increases the pressure on LMMs to meet the market quality metrics applicable under the LMM Program and enhance market quality in all BZX-listed securities.[9] More LMMs registered on the Exchange will result in more competition to become an LMM in new and existing products, including where an assigned LMM fails to meet the market quality metrics, all of which the Exchange believes will act to enhance market quality in BZX-listed securities and improve issuer and investor experience.

The Exchange is proposing to waive the fees for a Member that is a registered LMM shall have physical connectivity fees waived for a single 1 gigabyte physical port that is connected solely to the BZX Equities secondary data center for the first twelve months following the Member establishing such physical connectivity.[10] There are a number of costs, both related and unrelated to the Exchange, associated with becoming an LMM and the Exchange believes that this proposal to reduce the overall burden to become an LMM will help the Exchange compete to attract LMMs. The Exchange believes that the ability to attract new LMMs will benefit of its listing business, its issuers, and investors in BZX-listed securities.

Implementation Date

The Exchange proposes to implement these amendments to its fee schedule on September 10, 2019.

2. Statutory Basis

The Exchange believes that the proposed rule change is consistent with the objectives of Section 6 of the Act,[11] in general, and furthers the objectives of Section 6(b)(4),[12] in particular, as it is designed to provide for the equitable allocation of reasonable dues, fees and other charges among its Members and other persons using its facilities. The Exchange also notes that its listing business operates in a highly competitive market in which market participants, which includes both ETP issuers and LMMs, can readily transfer their listings or opt not to participate, respectively, if they deem fee levels, liquidity provision incentive programs, or any other factor at a particular venue to be insufficient or excessive. The proposed rule change reflects a

[3] The Exchange notes that the waiver applies only to the BZX Equities secondary data center and to the extent that a Member otherwise subject to the waiver uses such physical connectivity to connect to the Exchange's equity options platform (''BZX Options'') or any of the Exchange's affiliates, such Member will be subject to the applicable physical connectivity fees.

[4] *See* Securities Exchange Act Release No. 83442 (June 14, 2018), 83 FR 28675 (June 20, 2018) (notice of filing and immediate effectiveness of proposed rule change related to physical port fees for BZX).

[5] *See* Securities Exchange Act Release No. 73639 (November 19, 2014), 79 FR72252 (December 5, 2014) (''SCI Adopting Release'').

[6] As defined in Rule 11.8(e)(1)(B), the term ''LMM'' means a Market Maker registered with the Exchange for a particular LMM Security that has committed to maintain Minimum Performance Standards in the LMM Security.

[7] *See* Securities Exchange Act Release No. 76162 (October 15, 2015), 80 FR 63849 (October 21, 2015) (SR–BATS–2015–06) (notice of filing and immediate effectiveness of a proposed rule change to adopt Rule 2.4, Mandatory Participation in Testing of Backup Systems).

[8] The Exchange recently implemented a new LMM incentive program that provides payments to LMMs where they meet certain market quality metrics (the ''LMM Program'') rather than offering enhanced rebates on a transaction-by-transaction basis, as LMMs have traditionally been compensated, which it believes will help to incentivize Members to become LMMs on the Exchange and to foster competition among LMMs to become an LMM in all products listed on the Exchange, regardless of trading volume. *See* Securities Exchange Act Release No. 86213 (June 27, 2019), 84 FR 31951 (July 3, 2019).

[9] As provided in Rule 11.8(e)(2)(C), where an LMM does not meet the market quality metrics for three out of four months, they are subject to losing their registration as an LMM in the applicable security.

[10] As noted above, the waiver applies only to the BZX Equities secondary data center and to the extent that a Member otherwise subject to the waiver uses such physical connectivity to connect to BZX Options or any of the Exchange's affiliates, such Member will be subject to the applicable physical connectivity fees.

[11] 15 U.S.C. 78f.

[12] 15 U.S.C. 78f(b)(4).

competitive pricing structure designed to incentivize Members to enroll and participate as LMMs on the Exchange, which the Exchange believes will enhance market quality in ETPs listed on the Exchange. As described above, the Exchange is proposing to waive certain physical connectivity fees for Members that are registered as an LMM on the Exchange for the first twelve months following the Member establishing physical connectivity to the secondary data center, which it believes will allow it to better compete to attract market participants to register as LMMs on the Exchange.

The Proposed Fee Waiver Is Reasonable

The Exchange believes that the proposal is a reasonable means to encourage Members to register as an LMM. By reducing the cost associated with the initial registration and participation as an LMM, Members will be more likely to participate in the LMM program. The Exchange believes that this will benefit the Exchange's listing program through enhanced competition among LMMs, which will also benefit issuers of securities listed on the Exchange, and, more broadly, investors through enhanced market quality in such securities.

The Proposed Fee Waiver Is Equitable and Not Unreasonably Discriminatory

The Exchange believes that the proposal represents an equitable allocation of reasonable dues, fees, and other charges and is not unreasonably discriminatory in that it applies uniformly to all similarly situated Members. Any Member that has not established physical connectivity to the secondary data center that becomes an LMM will be eligible for such waiver. While Members that are already connected to the secondary data center will not be eligible, they have already made the decision to connect to the secondary data center and presumably such costs were included in their calculation. Further, the proposal will only result in reduced fees for Members and will not result in any changes for Members that are already connected to the secondary data center.

The Exchange also believes that the proposal represents an equitable allocation of reasonable dues, fees, and other charges and is not unreasonably discriminatory as LMMs play an important role in the Exchange's listing program by providing significant liquidity and enhanced market quality in BZX-listed securities. As noted above, there is significant competition among listing venues to attract, retain, and incentivize liquidity provision by LMMs. Increasing the number of LMMs on the Exchange and enhancing the competition among LMMs is particularly important because it further increases the pressure on LMMs to meet the market quality metrics applicable under the LMM Program and enhance market quality in all BZX-listed securities. More LMMs registered on the Exchange will result in more competition to become an LMM in new and existing products, including where an assigned LMM fails to meet the market quality metrics, all of which the Exchange believes will act to enhance market quality in BZX-listed securities and improve issuer and investor experience.

The Exchange is proposing to waive the fees for a single 1 gigabyte physical port in its secondary data center for Members that are registered as an LMM on the Exchange for the first twelve months following the Member establishing physical connectivity to the secondary data center. There are a number of costs, both related and unrelated to the Exchange, associated with becoming an LMM and the Exchange believes that this proposal to reduce the overall burden to become an LMM will help the Exchange compete to attract LMMs. The Exchange believes that the ability to attract new LMMs will benefit of its listing business, its issuers, and investors in BZX-listed securities.

Lastly, the Exchange believes the fees remain competitive with those charged by other venues and therefore continue to be reasonable and equitably allocated to Members.[13]

B. Self-Regulatory Organization's Statement on Burden on Competition

The Exchange does not believe that the proposed rule change will impose any burden on competition not necessary or appropriate in furtherance of the purposes of the Act. As discussed above, the Exchange believes that fees for connectivity and particularly for LMMs are constrained by the robust competition for order flow among listing venues and there is significant competition among listing venues to attract, retain, and incentivize liquidity provision by LMMs. The Exchange believes that this proposal will enhance the Exchange's ability to compete as a listing venue by incentivizing the registration of additional LMMs on the Exchange, resulting in additional competition among LMMs to the benefit of issuers and investors. The Exchange does not believe that the proposed changes represent a significant departure from previous pricing offered by the Exchange or pricing offered by the Exchange's competitors.

C. Self-Regulatory Organization's Statement on Comments on the Proposed Rule Change Received From Members, Participants, or Others

The Exchange has not solicited, and does not intend to solicit, comments on this proposed rule change. The Exchange has not received any unsolicited written comments from Members or other interested parties.

III. Date of Effectiveness of the Proposed Rule Change and Timing for Commission Action

The foregoing rule change has become effective pursuant to Section 19(b)(3)(A) of the Act[14] and paragraph (f) of Rule 19b–4[15] thereunder. At any time within 60 days of the filing of the proposed rule change, the Commission summarily may temporarily suspend such rule change if it appears to the Commission that such action is necessary or appropriate in the public interest, for the protection of investors, or otherwise in furtherance of the purposes of the Act. If the Commission takes such action, the Commission will institute proceedings to determine whether the proposed rule change should be approved or disapproved.

IV. Solicitation of Comments

Interested persons are invited to submit written data, views, and arguments concerning the foregoing, including whether the proposed rule change is consistent with the Act. Comments may be submitted by any of the following methods:

Electronic Comments

- Use the Commission's internet comment form (*http://www.sec.gov/rules/sro.shtml*); or
- Send an email to *rule-comments@sec.gov.* Please include File Number SR–CboeBZX–2019–082 on the subject line.

Paper Comments

- Send paper comments in triplicate to Secretary, Securities and Exchange Commission, 100 F Street NE, Washington, DC 20549–1090.

All submissions should refer to File Number SR–CboeBZX–2019–082. This file number should be included on the subject line if email is used. To help the Commission process and review your comments more efficiently, please use

[13] *See e.g.,* NYSE Arca Equities Fees and Charges, NYSE Arca Marketplace: Other Fees and Charges, Connectivity Fees. *See also,* Nasdaq Phlx LLC Pricing Schedule, Section XI, Direct Connectivity to Phlx.

[14] 15 U.S.C. 78s(b)(3)(A).

[15] 17 CFR 240.19b–4(f).

only one method. The Commission will post all comments on the Commission's internet website (*http://www.sec.gov/rules/sro.shtml*). Copies of the submission, all subsequent amendments, all written statements with respect to the proposed rule change that are filed with the Commission, and all written communications relating to the proposed rule change between the Commission and any person, other than those that may be withheld from the public in accordance with the provisions of 5 U.S.C. 552, will be available for website viewing and printing in the Commission's Public Reference Room, 100 F Street NE, Washington, DC 20549 on official business days between the hours of 10:00 a.m. and 3:00 p.m. Copies of such filing also will be available for inspection and copying at the principal office of the Exchange. All comments received will be posted without change. Persons submitting comments are cautioned that we do not redact or edit personal identifying information from comment submissions. You should submit only information that you wish to make available publicly. All submissions should refer to File Number SR–CboeBZX–2019–082, and should be submitted on or before October 21, 2019.

For the Commission, by the Division of Trading and Markets, pursuant to delegated authority.[16]

Jill M. Peterson,

Assistant Secretary.

[FR Doc. 2019–21091 Filed 9–27–19; 8:45 am]

BILLING CODE 8011–01–P

[16] 17 CFR 200.30–3(a)(12).

SECURITIES AND EXCHANGE COMMISSION

[Release No. 34–87096; File No. SR–CboeEDGA–2019–012]

Self-Regulatory Organizations; Cboe EDGA Exchange, Inc.; Order Instituting Proceedings To Determine Whether To Approve or Disapprove a Proposed Rule Change To Introduce a Liquidity Provider Protection Delay Mechanism on EDGA

September 24, 2019.

I. Introduction

On June 7, 2019, Cboe EDGA Exchange, Inc. (''EDGA'' or ''Exchange'') filed with the Securities and Exchange Commission (''Commission''), pursuant to Section 19(b)(1) of the Securities Exchange Act of 1934 (''Exchange Act'')[1] and Rule 19b–4 thereunder,[2] a proposed rule change to introduce a delay mechanism on EDGA. The proposed rule change was published for comment in the **Federal Register** on June 26, 2019.[3] On August 5, 2019, the Commission designated a longer period within which to approve the proposed rule change, disapprove the proposed rule change, or institute proceedings to determine whether the proposed rule change should be disapproved.[4] The Commission received twenty-one comment letters from eighteen commenters on the proposed rule change, including a response from the Exchange.[5] This order institutes proceedings under Section 19(b)(2)(B) of the Exchange Act[6] to determine whether to approve or disapprove the proposed rule change.

[1] 15 U.S.C. 78s(b)(1).

[2] 17 CFR 240.19b–4.

[3] *See* Securities Exchange Act Release No. 86168 (June 20, 2019), 84 FR 30282 (''Notice'').

[4] *See* Securities Exchange Act Release No. 86567, 84 FR 39385 (August 9, 2019).

[5] *See* Letters from: R.T. Leuchtkafer, dated July 12, 2019 (''Leuchtkafer Letter I''); Steve Crutchfield, Head of Market Structure, CTC Trading Group, LLC, dated July 15, 2019 (''CTC Letter''); Tyler Gellasch, Executive Director, Healthy Markets, dated July 16, 2019 (''Healthy Markets Letter''); Larry Tabb, Founder and Research Chairman, TABB Group, dated July 16, 2019 (''Tabb Group Letter''); Stephen John Berger, Managing Director, Global Head of Government and Regulatory Policy, Citadel Securities, dated July 16, 2019 (''Citadel Letter''); Mehmet Kinak, Vice President & Global Head of Systematic Trading & Market Structure, and Jonathan D. Siegel, Vice President & Senior Legal Counsel (Legislative & Regulatory Affairs), T. Rowe Price, dated July 16, 2019 (''T. Rowe Price Letter''); Adam Nunes, Head of Business Development, Hudson River Trading LLC, dated July 16, 2019 (''Hudson River Trading Letter''); Joanna Mallers, Secretary, FIA Principal Traders Group, dated July 16, 2019 (''FIA Letter''); Ray Ross, Chief Technology Officer, Clearpool, dated July 16, 2019 (''Clearpool Letter''); Eric Swanson, CEO, XTX Markets LLC (Americas), dated July 16, 2019 (''XTX Letter I''); John Thornton, Co-Chair, Hal S. Scott, President, and R. Glenn Hubbard, Co-Chair, Committee on Capital Markets Regulation, dated July 16, 2019 (''CMR Committee Letter''); Kirsten Wegner, Chief Executive Officer, Modern Markets Initiative, dated July 17, 2019 (''MMI Letter''); Theodore R. Lazo, Managing Director and Associate General Counsel, SIFMA, dated July 18, 2019 (''SIFMA Letter''); Eric Swanson, CEO, XTX Markets LLC (Americas), dated July 31, 2019 (''XTX Letter II''); Mark D. Epley, Executive Vice President & Managing Director, General Counsel, and Jennifer W. Han, Associate General Counsel, Managed Funds Association, dated August 2, 2019 (''MFA Letter''); Hubert De Jesus, Managing Director, Global Head of Market Structure and Electronic Trading, and Joanne Medero, Managing Director, Global Public Policy, Black Rock, dated August 2, 2019 (''Black Rock Letter''); Rich Steiner, Head of Client Advocacy and Market Innovation, RBC Capital Markets, dated August 15, 2019 (''RBC Letter''); Adrian Griffiths, Assistant General Counsel, Cboe Global Markets, dated August 22, 2019 (''Exchange Response Letter''); R.T. Leuchtkafer, dated August 23, 2019 (''Leuchtkafer Letter II''), R.T. Leuchtkafer, dated September 9, 2019 (''Leuchtkafer Letter III''), Joshua Mollner, Assistant Professor, Kellogg School of Management, Northwestern University, and Markus Baldauf, Assistant Professor, Sauder School of Business, University of British Columbia, dated September 12, 2019 (''Mollner & Baldauf Letter'') available at *https://www.sec.gov/comments/sr-cboeedga-2019-012/srcboeedga2019012.htm.*

II. Summary of the Proposal

EDGA proposes to adopt the Liquidity Provider Protection (''LP2'') delay mechanism, which would delay all incoming executable orders for up to four milliseconds.[7] If an incoming executable order subject to the delay is no longer executable against orders resting on the EDGA Book (*e.g.,* resting orders on the book are cancelled or modified such that they are no longer marketable against the delayed incoming order), such incoming order will be immediately released from the queue.[8]

The LP2 delay mechanism also would apply to the cancel, cancel/replace, or modification messages that are associated with liquidity taking orders.[9] The Exchange would apply such messages after the liquidity taking order is released from the delay mechanism.[10] At the end of the delay period, incoming orders, cancel, and cancel/replace messages subjected to the delay mechanism would be processed after the System has processed, if applicable, all messages in the security received by the Exchange during such delay period which could result in a message being delayed for longer than four milliseconds depending on the volume of messages being processed by the Exchange.[11]

Certain order types, or orders with instructions, that are not eligible for execution upon entry would become subject to the LP2 delay mechanism when a potential execution is triggered by a subsequent incoming order. For example, orders entered with either a Stop Price or Stop Limit Price instruction would not be executed until elected, and would only be subject to the delay mechanism after the order is converted to either a Market Order or Limit Order. Similarly, orders entered with a time-in-force instruction of Regular Hours Only would be subjected to the delay mechanism when entered into the EDGA Book after an opening or re-opening process.[12]

An incoming order that is not executable upon entry would not be subject to the delay mechanism. For example, orders with instructions that

[6] 15 U.S.C. 78s(b)(2)(B).

[7] *See* Notice, 84 FR at 30284.

[8] *See* Notice, 84 FR at 30284.

[9] *See id.*

[10] *See id.*

[11] *See* Notice 84 FR at 30284, n. 11.

[12] *See* EDGA Rule 11.7 relating to the opening and re-opening process.

are not executable when entered due to its order instructions (*e.g.,* Minimum Quantity and Post Only) would not be subject to the LP2 Delay Mechanism. The one exception to this would be incoming orders with the EdgeRisk Self Trade Protection modifier.[13] These modifiers would be applied to the order after it is delayed. In addition, incoming routable orders that bypass the EDGA book would not be subject to the LP2 delay mechanism, but any returning, executable remainder of such a routed order would be subject to the delay mechanism.

Market Data

The Exchange proposes that the LP2 delay mechanism would not apply to inbound or outbound market data. Current, un-delayed data, would be used for all purposes including regulatory compliance and the pricing of pegged orders and the quotation and trade data would continue to be disseminated, without delay, to the applicable securities information processor (''SIP'') and direct market data feeds.[14]

Regulation NMS

In conjunction with the proposed LP2 delay mechanism, the Exchange proposes to disseminate a manual, unprotected quotation.[15] In addition, because certain Regulation NMS rules related to locked and crossed markets would apply differently to EDGA's manual, unprotected quotation, compared to its current automated, protected quotation, the Exchange proposed to make the two rule changes described below.

First, the Exchange proposes to add new EDGA Rule 11.10(a)(6) to provide that a bid (offer) on the EDGA Book is eligible to remain posted to the EDGA Book for one second after such bid (offer) is crossed by a Protected Offer (Protected Bid). The bid (offer) on the EDGA Book will be cancelled if it continues to be higher (lower) than a Protected Offer (Protected Bid) after this one second period. Because the delayed cancellation behavior set forth by proposed EDGA Rule 11.10(a)(6) would allow bids and offers on EDGA to remain posted and executable for up to one second if crossed by a Protected Bid or Protected Offer of another market, the Exchange also proposes to amend EDGA Rule 11.10(a)(2) to provide that the Exchange will not execute any portion of a bid or offer at a price that is more than the greater of five cents or 0.5 percent through the lowest Protected Offer or highest Protected Bid, as applicable.

Second, the Exchange proposes to amend EDGA Rule 11.10(f) related to the dissemination and display of ''Locking Quotations or Crossing Quotations''.[16] Because the Exchanges' quotations would be marked manual, Rule 610(d)(1)(ii) of Regulation NMS requires that the Exchange avoid locking or crossing any quotation in an NMS stock disseminated pursuant to an effective national market system plan. The Exchange proposes to amend EDGA Rule 11.10(f)(3) to provide that an EDGA quotation would not be considered a Locking or Crossing Quotation if the quotation being locked or crossed is a manual quotation that is allowed to be locked or crossed pursuant to an exemption request submitted by the Exchange.[17] In the Notice, the Exchange notes that it submitted an exemption request to the Commission pursuant to Rule 610(e) of Regulation NMS that, if granted by the Commission, would permit the Exchange to lock or cross manual quotations disseminated by the New York Stock Exchange LLC (''NYSE'').[18]

Eliminate or Modify Certain Order Types and Instructions

The Exchange proposes to eliminate or modify certain order types and instructions to reduce System complexity in light of the operation of the proposed LP[2] delay mechanism. Specifically, the Exchange proposes to eliminate the:

- Discretionary Range instruction[19] and the MidPoint Discretionary Order (''MDO'');[20]
- Pegged instruction,[21] including the Market Peg[22] and Primary Peg instruction;
- Supplemental Peg Orders;[23] and
- Non-Displayed Swap and Super Aggressive instructions.[24]

In addition, the Exchange proposes to modify the:

- MidPoint Peg Order (''MPO'')[25] by eliminating the optional functionality that allows a User to: (1) Peg the order to the less aggressive midpoint or one minimum price variation inside the same side of the NBBO, and (2) opt for executions during a locked market;

[13] *See* Notice, 84 FR at 30283.

[14] *See id.*

[15] Rule 600(a)(37) defines a ''manual quotation'' as any quotation other than an automated quotation.

[16] A ''Locking Quotation'' is the display of a bid for an NMS stock at a price that equals the price of an offer for such NMS stock previously disseminated pursuant to an effective national market system plan, or the display of an offer for an NMS stock at a price that equals the price of a bid for such NMS stock previously disseminated pursuant to an effective national market system plan in violation of Rule 610(d) of Regulation NMS. *See* EDGA Rule 11.6(g). A ''Crossing Quotation'' is the display of a bid (offer) for an NMS stock at a price that is higher (lower) than the price of an offer (bid) for such NMS stock previously disseminated pursuant to an effective national market system plan in violation of Rule 610(d) of Regulation NMS. *See* EDGA Rule 11.6(c).

[17] *See* Notice, 84 FR at 30285.

[18] *See* Notice, 84 FR at 30285; *see also* Letter from Adrian Griffiths, Assistant General Counsel, Cboe, to Vanessa Countryman, Acting Secretary, dated June 7, 2019 (requesting exemptive relief from certain requirements related to locked and crossed markets pursuant to Rule 610(e) of Regulation NMS).

[19] Discretionary Range is an optional instruction that a User may attach to an order to buy (sell) a stated amount of a security at a specified, displayed or non-displayed ranked price with discretion to execute up (down) to another specified, non-displayed price. *See* EDGA Rule 11.6(d).

[20] A Midpoint Discretionary Order is a limit order to buy that is pegged to the NBB, with discretion to execute at prices up to and including the midpoint of the NBBO, or a limit order to sell that is pegged to the NBO, with discretion to execute at prices down to and including the midpoint of the NBBO. *See* EDGA Rule 11.8(e).

[21] Pegged is an instruction to automatically re-price an order in response to changes in the NBBO, and can be entered as either a Market Peg or Primary Peg. *See* EDGA Rule 11.8(b)(9).

[22] A Market Peg is an order entered with an instruction to peg to the NBB, for a sell order, or the NBO, for a buy order. *See* EDGA Rule 11.6(j)(1).

[23] Supplemental Peg Orders are non-displayed Limit Orders that are eligible for execution at the NBB for a buy order and NBO for a sell order against an order that is in the process of being routed to an away Trading Center if such order that is in the process of being routed away is equal to or less than the aggregate size of the Supplemental Peg Order interest available at that price. *See* EDGA Rule 11.8(g).

[24] Currently, when an order entered with an NDS or Super Aggressive instruction is locked by an incoming order with a Post Only instruction that would not remove liquidity based on the economic impact of removing liquidity on entry compared to resting on the order book and subsequently providing liquidity, the order with the NDS or Super Aggressive instruction is converted to an executable order and will remove liquidity against such incoming order. If an order that does not contain a Super Aggressive instruction maintains higher priority than one or more Super Aggressive eligible orders, the Super Aggressive eligible order(s) with lower priority will not be converted and the incoming order with a Post Only instruction will be posted or cancelled in accordance with Rule 11.6(n)(4). This does not apply to orders entered with an NDS instruction. *See* EDGA Rule 11.6(n)(2), (n)(7).

[25] MPOs are non-displayed, market or limit orders with an instruction to execute at the midpoint of the NBBO, or, alternatively, pegged to the less aggressive of the midpoint of the NBBO or one minimum price variation inside the same side of the NBBO as the order. *See* EDGA Rule 11.9(c)(9).

• Price Adjust [26] and Display-Price Sliding [27] instructions to eliminate the functionality to allow orders with these instructions to adjust multiple times to a more aggressive price in response to changes to the prevailing NBBO; [28]

• Post Only instruction to (1) limit the use of the instruction to displayed orders and MPOs and (2) eliminate the ability of such orders to execute on an incoming basis; and

• Market Maker Peg Orders to require the use of a Post Only instruction with such orders.[29] Finally, the Exchange proposes related, conforming changes to rules referencing the current Post Only functionality that would permit an incoming order to be executed.[30]

III. Summary of Comments

The Commission received twenty-one comments from eighteen commenters on the proposed rule change, including a response letter from the Exchange.[31] Three commenters supported the proposal [32] and twelve commenters opposed the proposal.[33] One commenter conditioned support for the proposal on the Exchange's quote not being included in the SIP.[34] One commenter did not explicitly express support for, or, opposition to, the proposed rule change.[35]

A. Impact on Market Participants/ Impact on Orders

Two commenters believed that the proposal was consistent with the Exchange Act.[36] One commenter believed the proposal was not unfairly discriminatory under the Exchange Act because it targets a behavior, latency arbitrage, and not specific market participants.[37]

Two commenters noted the proposal would protect all orders that add liquidity.[38] One commenter suggested that, by protecting the resting orders of both liquidity providers and end users, the proposal would afford ''the best service and pricing to investors while still preserving the opportunity for those who wish to pursue higher speeds to benefit from doing so.'' [39] One commenter suggested that the delay mechanism would protect the passive orders routed by commercially available order placement algorithms, including the orders of institutional investors.[40] The commenter explained that an end users' passive orders would only miss fills if they cancelled their orders, and if this were the case, they would only miss adverse fills.[41] One commenter noted the proposal would allow market participants to interact with their resting orders, *e.g.,* by canceling the order or modifying the order's size, without being subject to the delay.[42] This commenter believed the ability for liquidity providers to ''fade away'' was important in light of today's fragmented, fast moving markets.[43]

Two commenters believed that the asymmetric delay is not akin to the ''last look'' practice in foreign exchange markets.[44] One commenter explained that the information leakage and pre-hedging activity associated with ''last look'' would not be possible under the current proposal because the liquidity provider would have no knowledge of any order attempting to access the liquidity provider's quote until an execution occurs against that quote.[45] One commenter indicated that the asymmetric speedbump is not a last look because it ''does not enjoy the ability to fade against a specific order.'' [46]

Eleven comments raised concerns about the proposal being unfairly discriminatory among market participants.[47] One commenter stated that intentional delays associated with speed bumps should be equally applied, not asymmetrically applied, to all market participants.[48] Two commenters stated the proposal would discriminate unfairly against liquidity takers.[49] Another commenter did not believe that the Exchange justified why investors accessing EDGA quotations should be ''systematically disadvantaged over those who provide quotations.'' [50] One commenter suggested the proposal would impede the ability of ETF market makers to reliably access displayed quotations in underlying securities for hedging purposes, potentially increasing the risks associated with providing ETF liquidity and resulting in wider spreads, the costs of which would be ''disproportionately borne by retail investors.'' [51] Two commenters were concerned that EDGA liquidity providers could be disadvantaged compared to faster EDGA liquidity providers, and an inability to respond quickly enough to market signals would create a riskless arbitrage opportunity for faster liquidity providers.[52] One commenter believed that market makers with superior resources would be able to avoid price volatility and the effects of latency arbitrage would be shifted to market participants without fast and expensive technology.[53]

The Exchange responded that liquidity providers are subject to asymmetric risks because liquidity takers determine the time of a trade and are able to remove liquidity before a liquidity provider can reprice its resting orders.[54] The Exchange explained that sophisticated liquidity takers can use information about impending price changes to purchase or sell shares.[55] The Exchange stated that limit orders can essentially serve as a ''free option'' for liquidity takers that use marketable

[26] Price Adjust is an order instruction requiring that where an order would be a locking quotation or crossing quotation of an external market if displayed by the System on the EDGA Book at the time of entry, the order will be displayed and ranked at a price that is one minimum price variation lower (higher) than the locking price for orders to buy (sell). *See* EDGA Rule 11.6(l)(1)(A).

[27] Display-Price Sliding is an order instruction requiring that where an order would be a locking quotation or crossing quotation of an external market if displayed by the System on the EDGA Book at the time of entry, will be ranked at the locking price in the EDGA Book and displayed by the System at one minimum price variation lower (higher) than the locking price for orders to buy (sell). *See* EDGA Rule 11.6(l)(1)(B).

[28] *See* EDGA Rule 11.6(l)(1)(A)(i),(B)(iii).

[29] A Market Maker Peg Order is designed to assist market makers maintain compliance with their continuous quoting obligations. Specifically, it is a limit order that is automatically priced by the System at the Designated Percentage away from the then current NBB (in the case of an order to buy) or NBO (in the case of an order to sell), or if there is no NBB or NBO at such time, at the Designated Percentage away from the last reported sale from the responsible single plan processor.

[30] *See e.g.,* EDGA Rule 11.6(l)(A)(4),(B)(4) and EDGA Rule 11.8(c)(5).

[31] *See supra* note 5.

[32] *See* CTC Letter; Mollner & Baldauf Letter; XTX Letter I; XTX Letter II.

[33] *See* Black Rock Letter; Citadel Letter; CMR Committee Letter; FIA Letter; Healthy Markets Letter; Hudson River Trading Letter; R.T. Leuchtkafer Letters I, II, and III; MFA Letter; MMI Letter; RBC Letter; SIFMA Letter; T. Rowe Price Letter.

[34] *See* Clearpool Letter at 4.

[35] *See* Tabb Group Letter.

[36] *See* CTC Letter at 3–4; XTX Letter I at 2–4; XTX Letter II at 3.

[37] *See* XTX Letter I at 3. A subsequent comment by the same commenter also characterized the proposal as ''not discriminatory'' but ''rather a rational response to address behavior that imposes explicit and implicit costs on investors and the wider market in the form of spread and market impact.'' *See* XTX Letter II at 2.

[38] *See* XTX Letter I at 3; CTC Letter at 3.

[39] *See* CTC Letter at 3.

[40] *See* XTX Letter II at 5.

[41] *See id.*

[42] *See* Clearpool Letter at 2.

[43] *See id.*

[44] *See* Tabb Group Letter at 4; XTX Letter I at 6.

[45] *See* XTX Letter I at 6.

[46] *See* Tabb Group Letter at 4.

[47] *See* Black Rock Letter at 1–2; Citadel Letter at 3; CMR Committee Letter at 1–2; Leuchtkafer Letter I at 1, 8, 11 and 15; FIA Letter at 1; Healthy Markets Letter at 9–10; Hudson River Trading Letter at 1 and 5; MFA Letter at 1–2; MMI Letter at 2; RBC Letter at 1; T. Rowe Price Letter at 1.

[48] *See* CMR Committee Letter at 2.

[49] *See* Black Rock Letter at 2; Healthy Markets Letter at 2.

[50] *See* Healthy Markets Letter at 2.

[51] *See* Citadel Letter at 2.

[52] *See* Leuchtkafer Letter I at 8; RBC Letter at 2.

[53] *See* Leuchtkafer Letter I at 8.

[54] *See* Exchange Response Letter at 2, 3, and 7.

[55] *See id.* at 3.

orders to access posted liquidity, and that the liquidity takers essentially can lock in a risk-free profit if the liquidity provider is not able to react and reprice its posted liquidity.[56] The Exchange indicated that liquidity providers are mindful of this ''free option'' when they price their quotes, and reasoned that it is important to protect liquidity providers ''given the service that they provide to the market'' and because ''quotations posted by liquidity providers determine the quality of executions received by investors that submit marketable order flow.'' [57] The Exchange suggested different types of market participants that provide liquidity would benefit from the delay mechanism since it would attract a wider range of participants that could compete on factors other than speed, such as quality of execution, and noted a ''significant amount'' of institutional order flow is managed through broker-dealer algorithms that could response to market information in less than the 4 millisecond timeframe.[58]

Five commenters expressed concern about unfair discrimination among orders because the delay mechanism would apply asymmetrically to only liquidity-taking orders.[59] One commenter noted that the speedbumps previously approved by the Commission are applicable to all inbound and outbound communications, whereas the EDGA speedbump is asymmetric and only applies to incoming executable orders.[60] Another commenter stated that each time a liquidity provider utilizes the asymmetric speed bump to cancel or reprice a displayed quote, any incoming order that would have otherwise immediately executed would be negatively impacted.[61] The commenter explained that in the event that a large institutional order is routed to multiple exchanges simultaneously, the EDGA portion of the order would likely be filled at a worse price since EDGA liquidity providers would be able to cancel or reprice their displayed quotes based on the most recent market data showing liquidity being taken from other venues.[62] Another commenter suggested that enabling market makers to obtain superior order book queue position could discourage the use of limit orders by retail and institutional investors over time by increasing these investors' transaction costs.[63] One commenter noted that under the proposal non-marketable orders could be canceled at any time, while marketable orders could not be cancelled while the order queues because of the delay mechanism.[64] This commenter suggested that marketable orders would be harmed because they would not be allowed to be updated during the delay to adjust market information that is revealed during the delay.[65]

The Exchange responded to the comment suggesting that the proposed asymmetric delay that would only be applicable to incoming executable orders is unfairly discriminatory by stating the previously approved delay mechanisms may delay all incoming and outgoing orders, but treat orders resting on the book differently.[66] Specifically, the Exchange noted that the repricing instructions for non-displayed pegged orders on IEX and NYSE American are not subject to a delay and suggested that the proposed delay mechanism would similarly protect resting orders while allowing liquidity providers to improve displayed prices as opposed to relying on exchange-driven algorithms ''designed solely to match prices quoted on other markets.'' [67]

Three commenters asserted that the benefit liquidity providers receive as a result of the proposed rule change would be material or significant.[68] Five commenters expressed concern that liquidity providers with a speed advantage could use the asymmetric delay to engage in price discovery on other venues in order to gain an informational advantage at the expense of other market participants.[69] These commenters were concerned that liquidity providers would observe trading on other venues during the delay and cancel resting orders (*i.e.,* back away or quote fade) on EDGA to avoid executions against delayed incoming orders.[70] Two commenters believed the proposal bore some similarities to the ''last look'' practice in foreign exchange markets, wherein a market participant disseminates non-firm quotes to clients, and upon receiving a request to trade against its quoted price, has a final opportunity to accept or reject the trade request.[71] One commenter expressed that approving the proposal would be ''akin to institutionalizing the practice of 'last look'" but without the ''mitigating controls and prudential supervision'' associated with that practice.[72] One commenter believed that liquidity providers would cancel or reprice displayed quotes to selectively avoid incoming orders.[73] This commenter expressed that EDGA liquidity providers would be advantaged over EDGA liquidity takers because access to the Exchange's displayed quotations would be negatively impacted if the market moved in favor of the liquidity taker, while liquidity takers would have no equivalent mechanism to avoid executions if the market moves against them.[74]

One commenter stated that the proposal would discriminate unfairly against liquidity takers since they would be exposed to an increase in adverse selection and stale executions after the delay.[75] Another commenter suggested that the advantages liquidity providers would receive raise concerns that the proposal ''is inconsistent with the objectives of Section 11A of the Act to assure fair competition among brokers and dealers, and among exchange markets.'' [76] Another commenter, a long-term institutional trader, indicated that their exposure to adverse selection and unfavorable fills would increase if highly sophisticated market makers could adjust their displayed quotes based on market signals.[77] This commenter elaborated that the proposal could lead to an artificial increase in passive bids and offers by EDGA Market Makers, which could result in EDGA being ''similar to other venues where buy-side participants and other institutions struggle'' to receive quality executions.[78]

One commenter suggested that it may be a violation of the Quote Rule to permit some market participants to modify or cancel their quotations while incoming orders seeking to access those quotations are delayed.[79] Another commenter suggested that the proposal could create problems for brokers or dealers with respect to complying with

[56] *See id.*

[57] *See* Exchange Response Letter at 4, 7.

[58] *See id.* at 9–10.

[59] *See* Citadel Letter at 2–3; Leuchtkafer Letter I at 10; Hudson River Trading Letter at 3; MFA Letter at 1–2; SIFMA Letter at 2.

[60] *See* MFA Letter at 2.

[61] *See* Citadel Letter at 2.

[62] *See id.*

[63] *See* Leuchtkafer Letter I at 9.

[64] *See* Hudson River Trading Letter at 3.

[65] *See id.*

[66] *See* Exchange Response Letter at 6.

[67] *See id.* at 6–7.

[68] *See* Black Rock Letter at 2; Citadel Letter at 2; FIA Letter at 2.

[69] *See* Citadel Letter at 2; Hudson River Trading Letter at 3; Leuchtkafer Letter I at 10–11; MFA Letter at 2; RBC Letter at 1.

[70] *See* Citadel Letter at 2–3; Hudson River Trading Letter at 3; Leuchtkafer Letter I at 7; MFA Letter at 2; RBC Letter at 2.

[71] See Black Rock Letter at 3; Citadel Letter at 3.

[72] See Black Rock Letter at 3.

[73] *See* Citadel Letter at 2.

[74] *See id.* at 5.

[75] *See* Black Rock Letter at 2.

[76] *See* MFA Letter at 3.

[77] *See* T. Rowe Price Letter at 2.

[78] *See id.*

[79] *See* Healthy Markets Letter at 11.

Rule 602(b) of Regulation NMS, which requires a broker or dealer to honor its quotes when an order is presented to trade with those prices.[80] This commenter noted that the speedbump is designed to delay the incoming order from being presented to a broker or dealer in order to provide the broker or dealer with additional time to update its prices, which would effectively allow the broker or dealer to not honor its quotation when the incoming order was presented (*i.e.,* received and processed by the Exchange).[81]

The Exchange responded that commenter concerns related to quote fading were unwarranted because post execution prices are relatively stable for most investors and such liquidity should continue to be available despite the four millisecond delay.[82] The Exchange responded that the proposal is consistent with the Quote Rule. According to the Exchange, the Quote Rule only requires quotations to be firm when presented to a broker-dealer for execution.[83] Under the proposed rule change, the liquidity provider has no knowledge of the incoming order and thus the incoming order is not presented to the liquidity provider for execution until the incoming order exits the delay mechanism.[84] The Exchange opined that since the liquidity provider would be unable to refuse the trade at this point, the liquidity provider's quotation would be firm ''consistent with both the letter and the spirit of the Quote Rule.'' [85] The Exchange also asserted that the proposal is distinguishable from ''last look'' functionality on the foreign exchange markets because EDGA liquidity providers would not have the opportunity to avoid executions with an incoming marketable order after it has been presented for execution.[86] Rather, the Exchange suggested that liquidity providers would continue to quote prices based on available market information, and the liquidity taking order would only become known when the order is presented for execution after exiting the delay mechanism.[87] The Exchange believed that the proposal could reduce the risk of adverse selection for liquidity providers by giving them an opportunity to update their posted quotations before trading at a potentially stale price.[88] The Exchange indicated that reduced adverse selection risks for liquidity providers, as opposed to reduced liquidity for investors, was the more likely outcome, which could benefit investors by facilitating more aggressive quoting and effective price discovery on EDGA.[89] The Exchange was not persuaded by the argument that liquidity providers would free ride price discovery because the Exchange believed such a strategy would be unsuccessful and result in EDGA having inferior intermarket priority for liquidity taking orders.[90] The Exchange noted that liquidity providers on EDGA would still need to compete with each other to establish the Exchange BBO in order to trade with incoming marketable order flow, which should improve market quality on EDGA.[91]

B. Competition

Two commenters asserted that the proposal would reduce barriers to entry for new liquidity providers,[92] and three commenters believed the proposal would encourage competition among existing liquidity providers.[93] One commenter expected that the proposal would result in greater competition between EDGA market makers on the basis of price and order size.[94] One commenter characterized the proposal as ''explicitly pro-competitive'' and suggested it would help foster competition by ensuring all market participants have at least some minimum amount of time to react to price changes in related markets, which would likely reduce the advantage that would otherwise be held by the small number market participants that use ''extreme'' low-latency technology to ''pick off'' participants who take slightly longer to reprice resting orders in response to new information.[95]

Four commenters were concerned that proposal would impose a burden on competition.[96] Three commenters suggested that EDGA liquidity providers would be advantaged over liquidity providers on other markets because non-EDGA liquidity providers would not have a mechanism to avoid unfavorable executions.[97] One commenter suggested that the proposal did not address the burden on competition that could be caused by allowing EDGA liquidity providers to ''free-ride'' on price discovery on other markets that do not employ an asymmetric delay, and how such free-riding could discourage the order display of liquidity providers on competing exchanges and potentially diminish liquidity and price discovery on those other markets.[98]

The Exchange responded that the proposal would serve to increase competition among liquidity providers by attracting a wider range of participants that could compete on factors other than speed.[99] The Exchange suggested that market participants that routinely enter two sided quotations and traded actively would benefit from the proposal relative to the amount of liquidity provided, but the benefits of the proposal would not be restricted to liquidity providers.[100] The Exchange indicated that, for instance, institutional order flow that is managed by a broker-dealer algorithm would also benefit from the ability to react to market signals during the four millisecond delay.[101] The Exchange stated that different kinds of market participants would directly benefit from the LP2 delay mechanism as liquidity providers and liquidity takers because of improved market quality.[102]

C. Impact on Market Quality

Four commenters expected that the proposal would result in improved market quality.[103] One commenter believed that the proposal would aid in attracting liquidity and positively impact order routing behavior, execution quality, and general market quality.[104] One commenter theorized that liquidity and informative prices were desirable market attributes but that such objectives sometimes conflicted and thus a tradeoff was necessary; the commenter suggested an asymmetric speedbump may be a means to achieve these dual goals because it would help to eliminate latency arbitrage.[105] Two commenters believed that the proposal would allow liquidity providers to

[80] *See* Hudson River Trading Letter at 4.

[81] *See* Hudson River Trading Letter at 4.

[82] *See* Exchange Response Letter at 5. The Exchange believes that statistics provided in the response letter related to markouts for liquidity providers on EDGA in July 2019 demonstrate that published quotations accessed by the majority of investors tend to be relatively stable in the 20 milliseconds following an investor removing liquidity posted on the EDGA order book. *See id.*

[83] *See* Exchange Response Letter at 15–16.

[84] *See id.* at 16.

[85] *See id.*

[86] *See id.* at 15.

[87] *See* Exchange Response Letter at 15–16.

[88] *See id.* at 2, 5.

[89] *See id.* at 5.

[90] *See id.* at 8.

[91] *See id.*

[92] *See* CTC Letter at 3–4; XTX Letter I at 5; XTX Letter II at 1, 8.

[93] *See* CTC Letter at 3–4; Mollner & Baldauf Letter at 2; XTX Letter I at 5; XTX Letter II at 1, 8.

[94] *See* XTX Letter II at 2.

[95] *See* CTC Letter at 1, 3.

[96] *See* Citadel Letter at 5; FIA Letter at 2; Hudson River Trading Letter at 1; MFA Letter at 1.

[97] *See* Citadel Letter at 5; Hudson River Trading Letter at 2; MFA Letter at 3.

[98] *See* Hudson River Trading Letter at 2.

[99] *See* Exchange Response Letter at 9.

[100] *See id.* at 8.

[101] *See id.* at 10.

[102] *See id.*

[103] *See* Clearpool Letter at 1; CTC Letter at 1–2; Mollner & Baldauf Letter at 2; XTX Letter I at 3; XTX Letter II at 9.

[104] *See* Clearpool Letter at 1.

[105] *See* Mollner and Baldauf Letter at 1.

narrow spreads and display larger size.[106] One commenter indicated that although high-frequency liquidity providers were likely to be the immediate beneficiaries of the asymmetric speedbump, competition among them would likely result in tighter and deeper markets that would benefit other traders, and these traders may be the ultimate beneficiaries of the asymmetric speedbump.[107] This commenter explained that even though quotes may fade during episodes of latency arbitrage, these quotes are likely to remain accessible during other times, to the benefit of most investors.[108] Another commenter believed that the proposal would make the market more fair, encourage displayed liquidity and promote efficient price discovery.[109]

Two commenters believed that a positive outcome of the proposal would be a reduced reliance on the speed of market connectivity, which would decrease the need for market participants to invest in technology in order to attain small, incremental speed advantages (*i.e.,* microseconds).[110] One of these commenters suggested that some latency sensitive firms engage in illegal or untoward activity to attain speed advantages in order to trade at stale prices, which impose an operational tax on liquidity providers that is passed on to investors.[111] This commenter believed that providing liquidity providers with the ability to identify and react to latency arbitrage strategies should result in tighter pricing and deeper books for investors.[112] This commenter indicated that even if the LP2 delay mechanism slowed down price discovery on EDGA, it would not materially affect investors because investors tend to have long-run economic exposures (*e.g.,* days, weeks, or months) and their trading or hedging activity is not motivated by market developments at the millisecond timescale.[113] This commenter noted that other commenters referenced an Australian study suggesting that an asymmetric speedbump had a negative impact on market liquidity on the TSX Alpha Exchange in Canada, however this commenter believed a subsequent academic study lacked evidence that the asymmetric speedbump had a negative impact on liquidity, trading costs or execution quality.[114]

Nine commenters were concerned that the proposal could negatively impact market quality.[115] Three commenters noted that an asymmetric speedbump could give a misleading impression of the availability of firm quotes and therefore result in illusory quotes or liquidity.[116] One commenter stated that although the proposal may enhance displayed liquidity on EDGA, such displayed liquidity would be ''conditional and less accessible'' since liquidity providers would be likely to quote larger sizes and tighter spreads only because of their ability to back away from these quotes during the delay.[117] One commenter expressed concern about the potential for an increase in quote fading at other exchanges resulting in adverse change to the NBBO, which could ultimately reduce the incentive for liquidity providers to post a larger size on EDGA.[118] One commenter stated that the proposal does not explain how it would incentivize ''tighter quotes or other benefits.'' [119]Another commenter suggested that the proposal functions as an ''opaque rebate'' to liquidity providers because it affords them an advantage by allowing them to avoid adverse executions, and the economic value of this advantage is not quantifiable in advance.[120] This commenter suggested that the use of structural incentives such as LP2 raises concern that transparent pricing will be replaced by advantages that are difficult to quantify, and such advantages could impact the efficacy of Rule 610T, the Transaction Fee Pilot.[121]

Two commenters were concerned about the potential for the proposal to have a negative impact on Intermarket Sweep Orders (''ISOs'').[122] One commenter suggested that it would be likely that the EDGA portion of an ISO order would be filled at a worse price than other portions of the order since EDGA liquidity providers would be able to reprice displayed quotes based on recent market data.[123] The other commenter believed that by the time the investor's order would exit the delay, the order it would have executed against on EDGA would almost certainly be gone.[124] Thus, the commenter queried how the market center would interact with ISOs that are effectively 4 milliseconds old in a scenario in which a customer seeks to access liquidity across multiple venues by sweeping the market at a given price level.[125]

One commenter suggested that marketable orders would likely be diverted to competing venues, which would result in increased adverse executions for liquidity providers on those venues since marketable orders on EDGA would be less likely to contribute to price discovery.[126] Two commenters suggested that because liquidity providers at exchanges without asymmetric delays would be likely to bear the costs of this increased adverse selection, spreads would likely widen at those venues.[127] One commenter suggested that such adverse selection would serve to reduce liquidity, degrade price discovery, and widen spreads market-wide.[128]

One commenter suggested that because similar proposals could be adopted by all or a substantial portion of the U.S. equities market, the potential impact on market quality and investor protection in such a scenario should be considered.[129] One commenter suggested approval should only be given on a pilot basis in order to limit the proposed rule change's ''deleterious effects and enable collection of empirical data for assessing its impact on market quality.'' [130] One commenter noted that the proposal may encourage other exchanges to implement additional and longer delays, which could result in exchanges competing to execute orders more slowly.[131]

One commenter expressed that the proposed 4 millisecond delay would create ''significant uncertainty of execution (''fill rates'') and severely impede the ability of long-term investors to access displayed quotations simultaneously.'' [132] This commenter noted that MIDAS data indicated that 15.59% of quotes in large stocks are canceled within one millisecond, and because that timeframe is only one quarter of EDGA's proposed delay, it

[106] *See* XTX letter I at 1; Mollner & Baldauf Letter at 2.

[107] *See* Mollner & Baldauf Letter at 2.

[108] *See id.*

[109] *See* CTC Letter at 1.

[110] *See* XTX Letter I at 2; CTC Letter at 3.

[111] *See* XTX Letter I at 1–2.

[112] *See id.*

[113] *See* XTX Letter I at 8.

[114] *See* XTX Letter II at 8–9.

[115] *See* Black Rock Letter at 1; Citadel Letter at 10; FIA Letter at 1; Healthy Markets Letter at 7; Hudson River Trading Letter at 3–4; MMI Letter at 2; RBC Letter at 1–2; Tabb Group Letter at 2; T. Rowe Price Letter at 2.

[116] *See* Black Rock Letter at 3; FIA Letter at 2; RBC Letter at 2.

[117] *See* Hudson River Trading Letter at 3.

[118] *See* T. Rowe Price Letter at 2.

[119] *See* SIFMA Letter at 2.

[120] *See* Hudson River Trading Letter at 4.

[121] *See id.*

[122] *See* Citadel Letter at 9; Healthy Markets Letter at 14.

[123] *See* Citadel Letter at 4.

[124] *See* Healthy Markets Letter at 14.

[125] *See id.*

[126] *See* Hudson River Trading Letter at 3.

[127] *See* Black Rock Letter at 2; Hudson River Trading Letter at 3.

[128] *See* Hudson River Trading Letter at 3.

[129] *See id.* at 4.

[130] *See* Black Rock Letter at 3.

[131] *See* SIFMA Letter at 2.

[132] *See* T. Rowe Price Letter at 2.

could be expected that arbitrary cancellation rates would rise considerably if the proposal were implemented.[133] One commenter did not believe that the proposal sufficiently addressed the potential impact on financial products and asset classes traded on other venues.[134] Two commenters were concerned that the proposal would increase locked and crossed markets.[135] One commenter did not believe that the proposal addressed how trades would be conducted during locked and crossed markets which could frustrate investors receiving best execution.[136] The commenter also suggested that by ''enabling those who submit orders to modify or cancel those orders before execution, but after'' orders that could potentially match have been presented, the Exchange ''opens the door'' to potentially ''significant manipulative or abusive practices, including spoofing'', which should be addressed.'' [137] This commenter also questioned whether it was prudent to link a major market structure rule or delay mechanism to existing technology such as the high speed microwave connection, since technology is ''prone to frequent changes.'' [138]

Seven commenters referenced studies on the impact of an asymmetric speedbump on TSX Alpha, an unprotected exchange in Canada that delayed liquidity-taking orders, as a means to evaluate and critique the instant proposal.[139] One commenter noted that an Australian study on TSX Alpha suggested that even a millisecond of advance knowledge of institutional investors' trading intentions is valuable and could lead to substantial information leakage across venues resulting in an increase in total transaction costs and a reduction in order book resiliency.[140] Another commenter indicated that the Australian study found that liquidity, in the aggregate, was negatively impacted with increased market-wide costs for liquidity-takers.[141] One commenter noted that after the introduction of the speedbump, TSX Alpha's quoting at the NBBO fell immediately from 60% to 36%.[142] This commenter, while noting the structural differences between the Canadian and US markets, believed that TSX Alpha is analytically relevant to the current proposal.[143] One commenter suggested that the data related to the impact on speedbumps was unsettled because Australian and Canadian studies had yielded different conclusions, and noted that the Canadian study did not examine quote fading.[144] One commenter indicated the Canadian study found that TSX Alpha did not impact market-wide liquidity and further found negative effects for certain participants, such as buy-side investors.[145] The commenter also referenced an Ontario Securities Commission (''OSC'') staff notice that reported the OSC's own market quality measures did not materially change as a result of the TSX Alpha speedbump, as well as a survey of market participants by the OSC that found TSX Alpha added complexity into routing decisions and that fill rates on Alpha had decreased in certain situations, such as for orders that are expected to go through multiple price levels or need to be split and sent to multiple marketplaces simultaneously—*e.g.,* institutional orders.[146]

The Exchange responded that the proposal is designed to improve market quality by reducing the adverse selection risk for liquidity providers in order to encourage the provision of liquidity that is more aggressively priced with greater depth.[147] The Exchange indicated that liquidity takers could choose not to route to EDGA if liquidity providers did not step up and provide the expected market quality benefits in terms of increased depth or more aggressive prices.[148] The Exchange believed that the potential for liquidity takers to route to alternative venues would incent liquidity providers to improve market quality since their ability to trade is ''wholly contingent on attracting liquidity taking orders willing to access their quotations.'' [149] The Exchange stated that this is consistent with the current operation of EDGA liquidity providers.[150] The Exchange responded to comments related to the Australian TSX Alpha study and suggested that the results of the study had been contradicted by a subsequent study and review performed by Canadian regulators which concluded that the TSX Alpha speedbump did not have an adverse effect on the market quality of the Canadian equity markets.[151] The Exchange also noted the significant differences between the U.S. and Canadian equities markets in terms of regulation and market structure, as well as material differences between the current proposal and the TSX Alpha speedbump.[152] The Exchange offered that to the extent that the Canadian perspective is instructive, the analysis done by Canadian regulators demonstrates the value of offering innovations similar to the instant proposal.[153]

D. Data and Support

Five commenters expressed concern that the Exchange did not provide data to support key assertions within the proposal.[154] One commenter stated that the proposal was ''inadequate in light of Susquehanna'' and noted that the proposal lacked ''quantitative detail'' related to EDGA's current marketplace, and how EDGA would achieve its stated goals if the proposal were implemented.[155] Four commenters indicated that EDGA did not provide the data necessary to demonstrate that cross-asset latency arbitrage negatively impacts liquidity on EDGA or that the proposed asymmetric speed bump would improve market quality.[156] One commenter noted that EDGA did not provide ''any data or analysis regarding how many members could be expected to increase quoting as a result'' of the proposal.[157] One commenter stated that EDGA did not provide data to evaluate the impact of the proposal on winners and losers—for example, the frequency with which liquidity providers are expected to use the delay, the impact on retail and institutional orders, and the impact on ETF market makers.[158] This commenter compared EDGA and EDGX market quality and postulated that the ''lower market quality of quotes on EDGA'' could be a function of the

[133] *See* T. Rowe Price Letter at 2 (referencing SEC's Quote Life Data Series on the MIDAS website).

[134] *See* Healthy Markets Letter at 7.

[135] *See* Healthy Markets Letter at 12; RBC Letter at 2.

[136] *See* Healthy Markets Letter at 12.

[137] *See id.* at 13.

[138] *See id.*

[139] *See* Black Rock Letter at 2; Healthy Markets Letter at 10; Leuchtkafer Letter I at 13–14; Leuchtkafer Letter II at 5–6; Leuchtkafer Letter III at 7; MFA Letter at 2; SIFMA Letter at 2.

[140] *See* MFA Letter at 2.

[141] *See* SIFMA Letter at 2.

[142] *See* Black Rock Letter at 2.

[143] *See id.*

[144] *See* Leuchtkafer Letter II at 5–6.

[145] *See* Leuchtkafer Letter III at 7.

[146] *See* Leuchtkafer Letter III at 7.

[147] *See* Exchange Response Letter at 1–2.

[148] *See id.* at 8.

[149] *See id.*

[150] *See id.* at 15–16.

[151] *See id.* at 10. The Exchange referenced a joint study on the impact of the TSX Alpha redesign conducted by the Investment Industry Regulatory Organization of Canada and the Bank of Canada, as well as a review conducted by the Ontario Securities Commission. *See id.*

[152] *See* Exchange Response Letter at 11.

[153] *See id.*

[154] *See* Citadel Letter at 6 and 10; Leuchtkafer Letter I at 2–5; FIA Letter at 2; Healthy Markets Letter at 5–6; SIFMA Letter at 2.

[155] *See* Leuchtkafer Letter I at 3, 15 (citing Susquehanna Int'l Grp., LLP v. SEC, 866 F.3d 442 (D.C. Cir. 2017)).

[156] *See* Citadel Letter at 6–7; FIA Letter at 2; Healthy Markets Letter at 6; SIFMA Letter at 2.

[157] *See* Healthy Markets Letter at 7.

[158] *See* Citadel Letter at 7.

different fee and rebate structures of the exchanges.[159] This commenter believed that its comparison of market quality on these exchanges provided insight into the potential impact of the inverted fee structure on EDGA, and stated that EDGA did not explain how its inverted fee structure would interact with the proposal to deliver the benefits claimed.[160]

One commenter believed that the MIDAS data referenced by another commenter, *i.e.,* that 15.59% of orders in large stocks are cancelled within one millisecond, were irrelevant to whether the delay mechanism impacted the fill rates for institutional investors because it is unlikely that latency arbitrage would occur immediately after order placement.[161] Another commenter suggested that ''the proposal [has] some merits'' and suggested that quote and execution traffic should be examined in order to estimate how much quote fading would occur via market makers within 4 milliseconds of a price movement.[162] The commenter also suggested that it would be beneficial to analyze how the proposed Transaction Fee Pilot's reduced and no-rebate pricing tiers might impact liquidity, and how this could be countered by the introduction of an asymmetric speedbump.[163]

The Exchange responded by providing data and analysis that it believes illustrates the latency arbitrage problem. The Exchange presented a chart displaying markouts for liquidity providers on EDGA in SPY for July 2019 that was based on whether a transaction involved a missed cancel—*i.e.,* instances in which a liquidity provider attempted and failed to cancel or replace their quotation within 4 milliseconds after an execution.[164] The Exchange indicated that ''these statistics illustrate the difference between the execution price and the midpoint price at the time of the trade and in the milliseconds following an execution.'' [165] The Exchange believed the data demonstrated that the midpoint price moves dramatically in the milliseconds immediately following transactions involving missed cancels, and that transactions in this category often involve a handful of faster firms that are routinely able to predict and profit from prices that are about to change.[166] The Exchange expressed that when prices immediately move against the resting order in the milliseconds following the trade, the trade was likely to have been executed at a stale price.[167] The Exchange further explained its belief that by offering a four millisecond period for liquidity providers to update their posted quotations before trading at a stale price, the LP2 delay mechanism would reduce the effectiveness of latency arbitrage strategies.[168]

In response to the information provided by the Exchange, one commenter suggested that the sample selection in the chart does not necessarily show stale quotes being picked off by latency arbitrageurs in Chicago, but rather may demonstrate that the SPY signal to cancel is coming from somewhere closer than Chicago, or perhaps that some or all of the EDGA market makers use something faster than fiber.[169] This commenter also suggested that based on the graphs provided by the Exchange, the proposal could result in providing an ''investor-funded subsidy'' of $900 a day or more in SPY to EDGA market makers.[170] This commenter also suggested that the data likely shows the effect of investor equities market sweeps as opposed to latency arbitrage activity based on the futures markets in Chicago.[171]

E. Impact of the SIP Disseminating Manual, Unprotected Quotes

One commenter expressed support for the inclusion of EDGA's unprotected quote in the SIP, and ultimately emphasized that there should be an appropriate modifier denoting the unprotected status.[172] In its second letter, the commenter noted that no market participant would be required to access EDGA's unprotected quote and thus the Exchange would stand or fall on its own merits.[173] The commenter also stated that it would be reasonable for pegged orders to only peg off the protected BBO and exclude unprotected quotes, which the Exchange explained is how the Canadian markets handle the pricing of pegged orders today in a market with both protected and unprotected quotes.[174] The commenter also expressed it would be reasonable to exclude unprotected quotes from consideration for regulatory references such as Regulation SHO's price test.[175]

Eight commenters expressed concern about the inclusion of EDGA's quotations to the SIP as manual, unprotected quotes.[176] Two of these commenters argued that EDGA quotations should be removed from the SIP.[177] One commenter suggested that the inclusion of EDGA's quotations in the SIP would allow EDGA to free ride the SIP.[178] Three commenters were concerned about the potential impact of EDGA quotes on the pricing of pegged orders, including midpoint orders.[179] As one commenter explained, many trading venues use the SIP NBBO for pegged orders, and to the extent EDGA sets the NBBO, the proposal could impact mid-point pegging prices on other venues with an inaccessible quotes that is artificially narrower than those on other venues.[180] One commenter suggested considering whether the SIPs should disseminate a new Protected Best Bid and Offer (''PBBO'') that would not include EDGA's non-protected quote and how EDGA's non-protected quote should be used in calculating midpoint values.[181] One commenter questioned how the NBBO would be determined when the SIP contains both protected and unprotected quotes, and whether it would be appropriate for a venue with only unprotected quotes to publish to the SIP—as well as what the implications would be for the different SIP Plans and for revenue sharing.[182] This commenter also queried how the routing of certain orders, such as ISOs, would be affected, and whether market participants would be required to make technological changes as a result.[183] Another commenter indicated the dissemination of unprotected, manual quotes to the SIP would add complexity and confusion to the national market system that could be harmful to long-term investors.[184]

The Exchange responded to comments suggesting that EDGA's quotation should be excluded from the NBBO disseminated by the SIP. The Exchange contended that eliminating EDGA's quotation from the SIP would

[159] *See id.* at 7 and 10.

[160] *See id.* at 7.

[161] *See* XTX Letter II at 4 (referencing T. Rowe Price Letter, which provided data from the SEC's Quote Life Data Series on the MIDAS website).

[162] *See* Tabb Group Letter at 5.

[163] *See* Tabb Group Letter at 5.

[164] *See* Exchange Response Letter at 3–4, Appendix A.

[165] *See id.* at 3.

[166] *See id.*

[167] *See id.*

[168] *See id.* at 2, 4.

[169] *See* Leuchtkafer Letter III at 3.

[170] *See id.* at 5.

[171] *See id.* at 6.

[172] *See* XTX Letter I at 5; XTX Letter II at 7.

[173] *See* XTX Letter II at 3.

[174] *See id.* at 6.

[175] *See* XTX Letter II at 6.

[176] *See* Black Rock Letter at 3; Citadel Letter at 8; Clearpool Letter at 3–4; Healthy Markets Letter at 10; Hudson River Trading Letter at 3; RBC Letter at 3; SIFMA Letter at 3; T. Rowe Price Letter at 2.

[177] *See* Clearpool Letter at 3–4; Healthy Markets Letter at 13.

[178] *See* Healthy Markets Letter at 12.

[179] *See* Citadel Letter at 9; Healthy Markets Letter at 14; SIFMA Letter at 3.

[180] *See* Healthy Markets Letter at 14.

[181] *See* SIFMA at 3.

[182] *See* Citadel Letter at 8–9.

[183] *See id.* at 8.

[184] *See* T. Rowe Price Letter at 2.

only serve to reduce transparency into the best prices available for securities, which would likely result in investor orders being executed at worse prices.[185] The Exchange noted that broker-dealers would remain free to determine how to use EDGA's manual quotation information, such as for setting midpoint prices or using it as a reference price for the execution of customer orders on ATSs or other off exchange markets.[186] The Exchange noted the EDGA manual quote would be identified in SIP feeds in the same manner as manual quotations disseminated from the NYSE floor, and that firms choosing to ignore EDGA's quotations could continue to identify the PBBO for order routing and trade-through compliance purposes, among others.[187]

F. Impact on the National Market System

Four commenters expressed concern about how the proposal could impact the National Market System, particularly as it relates to the publication of manual, unprotected quotations and functions related to the NBBO.[188] One commenter questioned whether EDGA would continue to meet Rule 604 standards for displaying customer limit orders without protected quote status.[189] Five commenters were concerned about how the proposal would impact the calculation of Rule 605 metrics and execution quality disclosures.[190] One commenter suggested that the inclusion of EDGA's quotation in the benchmark used for calculating execution quality statistics under Rule 605 would allow EDGA to free ride such metrics.[191] This commenter explained that because only the best orders on the exchange would be executed, and statistical measures of execution quality do not currently account for how many quotations are ''subject to backing away,'' execution quality metrics would likely show that EDGA's execution quality is better than execution quality on other exchanges, even if this is not the case.[192] Another commenter suggested that in addition to Rule 605 reporting, EDGA's best bid should not be used as a reference price for Regulation SHO, best execution, mid-point executions, or OTC transactions, since it would not be immediately accessible.[193]

One commenter opined that market data would not be impacted by the proposal because liquidity providing and quote generating orders would not be subject to the delay mechanism, and execution information for those orders would not be delayed once they pass over the speedbump.[194]

Three commenters were concerned that the proposal could result in an increase in locked and crossed markets.[195] One commenter questioned whether the proposal is consistent with Rule 610 of Regulation NMS and was concerned that the proposal did not address trading during locked and crossed markets, which could increase the risk of investors not receiving best execution.[196] One commenter noted that EDGA would be able to lock and cross automated markets despite being defined as a manual market, and cautioned that crossed markets may be more frequent and last longer than expressed in the proposal.[197]

Nine commenters were concerned that this proposed rule change could result in increased market complexity if implemented as proposed.[198] Five commenters were concerned about the potential for this proposal to establish precedent that could result in substantially similar proposals from competing exchanges, which could serve to increase market complexity.[199] One commenter indicated that the proposal may actually create an incentive not to trade on EDGA, and suggested that it would be beneficial to ascertain ''what types of liquidity incentives are valuable to the market and to the economy.'' [200] The commenter explained that because EDGA's inverted pricing model charges liquidity providers a fee when an order executes, the proposal would effectively allow liquidity providers to pull their quotes on EDGA as other markets move and incentivize quote fading to avoid the fee that would be incurred in the event of an execution.[201]

One commenter believed that because the proposal would eliminate or adjust the operation of certain rarely used order types and instructions, the Exchange was taking steps to reduce the complexity of its market.[202]

G. Impact on Best Execution and Broker-Dealer Obligations

Eight commenters expressed concern about the impact of the proposed rule change on broker-dealers' regulatory obligations, particularly with respect to a broker-dealer's obligation to obtain best execution.[203] One commenter believed that Commission and FINRA guidance and the adopting release for Regulation NMS adequately addressees best execution obligations.[204] This commenter noted that the decision to access a manual quotation rests with the broker-dealer's review of execution quality.[205] Four commenters conveyed it would be important to issue new guidance or modernize existing guidance to address the application of best execution principles to routing quotes to an unprotected exchange as compared to protected exchanges if the proposal is approved.[206] One commenter requested clarification that broker-dealers do not necessarily have to access or route to an unprotected venue that displays the best quote.[207] One commenter questioned whether EDGA's request to extend the ''Flickering Quote Exception'' to unprotected quotes would be appropriate, given that this may result in situations where a quote published on the SIP is locked or crossed with a protected quote, leading to potential confusion regarding best execution obligations and executions occurring outside of the protected NBBO.[208] One commenter suggested that the proposal would disincentivize improving the best bid or offer displayed on away markets.[209]

The Exchange responded to comments related to best execution concerns. The Exchange posited that the Commission's guidance related to best execution provided in conjunction with

[185] *See* Exchange Response Letter at 13–14.

[186] *See id.* at 14.

[187] *See id.* at 14–15.

[188] *See* Citadel Letter at 8; Healthy Markets Letter at 10–12; Hudson River Trading Letter at 3; RBC Letter at 3.

[189] *See* Citadel Letter at 8.

[190] *See* Black Rock Letter at 3; Citadel Letter at 8–9; Healthy Markets Letter at 11–12 and 14–15; Hudson River Trading Letter at 3; SIFMA Letter at 3.

[191] *See* Healthy Markets Letter at 12 and 14–15.

[192] *See id.* at 12.

[193] *See* Hudson River Trading Letter at 3.

[194] *See* Tabb Group Letter at 1.

[195] *See* Healthy Markets Letter at 12; Hudson River Trading Letter at 4 n.7; RBC Letter at 2.

[196] *See* Healthy Markets at 12,14.

[197] *See* RBC Letter at 2.

[198] *See* Black Rock Letter at 1; Clearpool Letter at 4; FIA Letter at 2; Hudson River Trading Letter at 4; Leuchtkafer Letter II at 5; MMI Letter at 1–2; RBC Letter at 3; SIFMA Letter at 2; T. Rowe Price Letter at 2 and 3.

[199] *See* Black Rock Letter at 2; Hudson River Trading Letter at 4; RBC Letter at 2; SIFMA Letter at 2; T. Rowe Price Letter at 2.

[200] *See* Tabb Group Letter at 4.

[201] *See* Tabb Group Letter at 4.

[202] *See* XTX Letter I at 6.

[203] *See* Black Rock Letter at 3; Citadel Letter at 9; Clearpool Letter at 3–4; Healthy Markets Letter at 11–12; Hudson River Trading Letter at 4; MFA Letter at 3; RBC Letter at 3; SIFMA Letter at 2.

[204] *See* XTX Markets Letter II at 6–7.

[205] *See id.* at 7.

[206] *See* Black Rock Letter at 3; Healthy Markets Letter at 13–14; MFA Letter at 3; SIFMA Letter at 3.

[207] *See* SIFMA Letter at 3.

[208] *See* Citadel Letter at 9.

[209] *See* Black Rock Letter at 2.

the adoption of Regulation NMS remained relevant, and broker-dealers should continue to be able to determine how to best to route their clients' orders.[210] The Exchange noted that broker-dealers already account for different types of execution venues in making best execution decisions, and the majority of these venues are not national securities exchanges and do not publicly disseminate a protected quotation, or display any quotation at all.[211] The Exchange agreed with reasoning set forth in the Regulation NMS adopting release suggesting that that exclusion of manual quotations from the NBBO could result in broker-dealers ignoring the best available quotations when executing customer orders.[212] The Exchange therefore contended that a similar best execution analysis would apply when determining whether to route an order to an unprotected exchange disseminating a manual quotation.[213] The Exchange further noted that if the proposal does not yield the intended market quality benefits on EDGA, broker-dealers would be free to route their clients' orders elsewhere according to their analysis of the best market for the security under prevailing market conditions.[214]

H. Operation of the Delay

Two commenters noted that there is no precedent for an asymmetric speedbump in the U.S. equities market.[215] One commenter noted that the instant proposal differed from the intentional delays implemented by NYSE American and IEX in that the 4 millisecond delay is approximately ten times longer than the 350 microsecond delays on IEX and NYSE American, and that EDGA proposes to waive order protection for its quotes, whereas the quotes on IEX and NYSE American would continue to be protected.[216] One commenter believed that a delay somewhat shorter in length than 4 milliseconds would suffice, although the proposal was a ''step in the right direction.'' [217]

One commenter believed that while the proposed delay is longer in duration than those of the symmetric speedbumps implemented by IEX and NYSE American, the four-millisecond speed bump ''appropriately recognizes the realities of U.S. market structure, where highly correlated instruments including equities, futures, and ETFs are variously traded in data centers across the New York-New Jersey metro area as well as in and around Chicago.'' [218] This commenter believed the duration of the proposed delay reasonably reflected the technological realities of cross-market securities and derivatives trading and hedging strategies.[219]

One commenter expressed concern that the proposal was not sufficiently clear in regard to how the proposed delay mechanism would operate, particularly in circumstances where intervening actions occur.[220] This commenter noted the examples provided by the Exchange did not address orders of different types or sizes, or orders from additional market participants.[221] This commenter posed the following questions about how a 200 share order that is submitted might interact with a 100 share order that is resting on the Exchange: (1) Whether the full 200 share order would be delayed; (2) if 100 shares were delayed, whether the other 100 shares would be permitted to post; (3) whether the non-delayed 100 shares would be sent to other market centers; (4) whether the firm who submitted the resting order that triggered the delay would be able to modify its order to increase its size in the interim, perhaps to 200 shares, and the impact of this change; (5) whether the answers to these questions are dependent upon order types used or other factors, and if so, what those factors are and how would they be determinative; (6) whether a new order that is submitted while a delayed order is waiting would be able to immediately execute against the now-delayed order once it waits out the four milliseconds, or if it would also be subject to a delay.[222] The commenter also requested an explanation related to why the first cancel or cancel/replace message entered would be queued and all subsequent messages would be ignored if a user enters multiple cancel or cancel/replace messages for a liquidity taking order during the delay period.[223] The commenter also inquired about the outcome in a scenario in which a quote is not canceled for one second in order to comply with the flickering quote rule.[224]

IV. Proceedings To Determine Whether To Approve or Disapprove SR–CboeEDGA–2019–012 and Grounds for Disapproval Under Consideration

The Commission is instituting proceedings pursuant to Section 19(b)(2)(B) of the Exchange Act [225] to determine whether the proposed rule change should be approved or disapproved. Institution of such proceedings is appropriate at this time in view of the legal and policy issues raised by the proposed rule change. Institution of proceedings does not indicate that the Commission has reached any conclusions with respect to any of the issues involved. Rather, as stated below, the Commission seeks and encourages interested persons to provide comments on the proposed rule change.

Pursuant to Section 19(b)(2)(B) of the Exchange Act,[226] the Commission is providing notice of the grounds for disapproval under consideration. The Commission is instituting proceedings to allow for additional analysis of the proposed rule change's consistency with: (1) Section 6(b)(5) of the Exchange Act, which requires, among other things, that the rules of a national securities exchange not be designed to permit unfair discrimination between customers, issuers, brokers, or dealers;[227] (2) Section 6(b)(8) of the Exchange Act, which requires that the rules of a national securities exchange not impose any burden on competition not necessary or appropriate in furtherance of the purposes of the Exchange Act;[228] and (3) Section 11A of the Exchange Act.[229]

V. Procedure: Request for Written Comments

The Commission requests that interested persons provide written submissions of their views, data, and arguments with respect to the issues identified above, as well as any other concerns they may have with the proposal. In particular, the Commission invites the written views of interested persons concerning whether the proposal is consistent with Sections 6(b)(5), 6(b)(8), and 11A of the Exchange Act, any other provision of the Exchange Act, or any other rule or regulation under the Exchange Act. Although there do not appear to be any issues relevant to approval or disapproval that would be facilitated by an oral presentation of views, data, and

[210] *See* Exchange Response Letter at 12.

[211] *See id.* at 12–13.

[212] *See* Exchange Response Letter at 14.

[213] *See* Exchange Response Letter at 13.

[214] *See id.*

[215] *See* Black Rock Letter at 1–2; Citadel Letter at 1.

[216] *See* Tabb Group at 1.

[217] *See* Mollner & Baldauf Letter at 2.

[218] *See* CTC Letter at 3.

[219] *See id.*

[220] *See* Healthy Markets Letter at 6–7.

[221] *See id.*

[222] *See id.* at 7.

[223] *See* Healthy Markets Letter at 7.

[224] *See id.*

[225] 15 U.S.C. 78s(b)(2)(B).

[226] *Id.*

[227] 15 U.S.C. 78f(b)(5).

[228] 15 U.S.C. 78f(b)(8).

[229] 15 U.S.C. 78k–1.

arguments, the Commission will consider, pursuant to Rule 19b–4, any request for an opportunity to make an oral presentation.[230]

Interested persons are invited to submit written data, views, and arguments regarding whether the proposal should be approved or disapproved by October 21, 2019. Any person who wishes to file a rebuttal to any other person's submission must file that rebuttal by November 4, 2019. The Commission asks that commenters address the sufficiency of the Exchange's statements in support of the proposal, in addition to any other comments they may wish to submit about the proposed rule change. In particular, the Commission seeks comment on the following:

1. Do commenters agree with the Exchange's assertion that the proposal would reduce cross-market latency arbitrage and improve market quality by enabling liquidity providers to maintain tighter spreads for longer durations and with greater size? Why or why not? How should enhancements to market quality be measured?

2. According to several commenters, EDGA liquidity would be ''illusory'' because the Exchange's liquidity providers could update their quotations while incoming orders are delayed. Do commenters believe that the proposed rule change would lead to quote fading? Why or why not? Do commenters believe that the proposed rule change would impact fill rates? Would the ''illusory'' liquidity be a significant portion of the Exchange's overall liquidity?

3. Some commenters assert that the proposal is not unfairly discriminatory under the Exchange Act because the proposal addresses a particular behavior as opposed to specific class or type of market participants. Is this assertion accurate? Why or why not?

4. Will the proposal increase the risk of adverse selection for liquidity takers and market participants that are unable to react to market signals in order to adjust their quotes within four milliseconds?

5. Is an intentional delay of four milliseconds necessary to minimize the effectiveness of latency arbitrage strategies? Will the delay negate the advantages that trading firms using the latest microwave connections have over liquidity providers using traditional fiber connections? Should the delay be shorter or longer to accomplish this goal? Is four milliseconds an appropriate duration for a delay? Is such delay consistent with the Act? Why or why not?

6. Is the proposal tailored in a manner such that its potential benefits outweigh the potential or likelihood of harm or unintended consequences to the national market system?

7. Should the Exchange's unprotected, manual quote be allowed to lock or cross manual quotations disseminated by another manual market? Why or why not?

8. What impact, if any, would the dissemination of an unprotected, manual quote have on the national market system? Should EDGA's unprotected, manual quote be disseminated by the SIP? If so, should the SIP disseminate a modifier to indicate that EDGA's quote is manual? Should the EDGA quote be used to calculate the NBBO? Should the EDGA quote be used to calculate midpoint values?

9. How will the dissemination of EDGA's unprotected, manual quote impact a broker-dealer's obligation to obtain best execution?

10. What would be the impact, if any, on the national market system if other national securities exchanges, with a larger percentage of overall trading volume, adopted a similar proposal? In particular, how would the proposal affect market quality?

11. What are commenters' views on how the proposal would affect trading activity, in general, and liquidity providers, in particular, on other markets? Would the LP2 delay mechanism impose systemic risks and create informational disparities across the national market system? Would the proposal provide EDGA liquidity providers with the option to leverage or free ride price discovery that occurs at other trading venues?

Comments may be submitted by any of the following methods:

Electronic Comments

- Use the Commission's internet comment form (*http://www.sec.gov/rules/sro.shtml*); or
- Send an email to *rule-comments@sec.gov.* Please include File Number SR–CboeEDGA–2019–012 on the subject line.

Paper Comments

- Send paper comments in triplicate to Secretary, Securities and Exchange Commission, 100 F Street NE, Washington, DC 20549–1090.

All submissions should refer to File Number SR–CboeEDGA–2019–012. This file number should be included on the subject line if email is used. To help the Commission process and review your comments more efficiently, please use only one method. The Commission will post all comments on the Commission's internet website (*http://www.sec.gov/rules/sro.shtml*). Copies of the submission, all subsequent amendments, all written statements with respect to the proposed rule change that are filed with the Commission, and all written communications relating to the proposed rule change between the Commission and any person, other than those that may be withheld from the public in accordance with the provisions of 5 U.S.C. 552, will be available for website viewing and printing in the Commission's Public Reference Room, 100 F Street NE, Washington, DC 20549, on official business days between the hours of 10:00 a.m. and 3:00 p.m. Copies of these filings also will be available for inspection and copying at the principal office of the Exchange. All comments received will be posted without change. Persons submitting comments are cautioned that we do not redact or edit personal identifying information from comment submissions. You should submit only information that you wish to make available publicly. All submissions should refer to File Number SR–CboeEDGA–2019–012 and should be submitted on or before October 21, 2019. Rebuttal comments should be submitted by November 4, 2019.

For the Commission, by the Division of Trading and Markets, pursuant to delegated authority.[231]

Jill M. Peterson,

Assistant Secretary.

[FR Doc. 2019–21096 Filed 9–27–19; 8:45 am]

BILLING CODE 8011–01–P

[230] Section 19(b)(2) of the Exchange Act, as amended by the Securities Act Amendments of 1975, Public Law 94–29 (June 4, 1975), grants the Commission flexibility to determine what type of proceeding—either oral or notice and opportunity for written comments—is appropriate for consideration of a particular proposal by a self-regulatory organization. *See* Securities Act Amendments of 1975, Senate Comm. on Banking, Housing & Urban Affairs, S. Rep. No. 75, 94th Cong., 1st Sess. 30 (1975).

[231] 17 CFR 200.30–3(a)(57).

SECURITIES AND EXCHANGE COMMISSION

Submission for OMB Review; Comment Request

Upon Written Request, Copies Available From: Securities and Exchange Commission, Office of FOIA Services, 100 F Street NE, Washington, DC 20549–2736.

Extension:

Rule 15Ba2–1 and Form MSD, SEC File No. 270–0088, OMB Control No. 3235–0083.

Notice is hereby given that pursuant to the Paperwork Reduction Act of 1995 (''PRA'') (44 U.S.C. 3501 *et seq.*), the Securities and Exchange Commission (''Commission'') has submitted to the Office of Management and Budget (''OMB'') a request for extension of the previously approved collection of information provided for in Rule 15Ba2–1 (17 CFR 240.15Ba2–1) and Form MSD (17 CFR 249.1100) under the Securities Exchange Act of 1934 (''Exchange Act'') (15 U.S.C. 78a *et seq.*).

Rule 15Ba2–1 provides that an application for registration with the Commission by a bank municipal securities dealer must be filed on Form MSD. The Commission uses the information obtained from Form MSD filings to determine whether bank municipal securities dealers meet the standards for registration set forth in the Exchange Act, to make information about particular bank municipal securities dealers available to customers and members of the public, and to develop risk assessment information about bank municipal securities dealers.

Form MSD is a one-time registration form that must be amended only if it becomes inaccurate. Based upon past submissions of two initial filings and 11 amendments in 2016, zero initial filings and 22 amendments in 2017, zero initial filings and 18 amendments in 2018, and zero initial filings and zero amendments so far in 2019, the Commission estimates that on an annual basis approximately 1 respondent will utilize Form MSD for an initial registration application, and that approximately 13 respondents will utilize Form MSD for an amendment, for a total of 14 respondents per year. The time required to complete Form MSD varies with the size and complexity of the bank municipal securities dealer's proposed operations. Bank personnel that prepare Form MSD filings previously indicated that it can take up to 15 hours for a bank with a large operation and many employees to complete the form, but that smaller banks with fewer personnel can complete the form in one to two hours. We believe that most recent applications have come from smaller banks. Also, amendments to form MSD are likely to require significantly less time. We estimate that the total annual burden is currently 21 hours at an average of 1.5 hours per respondent. (14 respondents/year × 1.5 hours/respondent = 21 hours/year). The staff estimates that the average internal compliance cost per hour is approximately $417.[1] Therefore, the estimated total annual cost of compliance is approximately $8,757 per year (21 hours/year × $417/hour = $8,757/year).

Rule 15Ba2–1 does not contain an explicit recordkeeping requirement, but the rule does require the prompt correction of any information on Form MSD that becomes inaccurate, meaning that bank municipal securities dealers need to maintain a current copy of Form MSD indefinitely. In addition, the instructions for filing Form MSD state that an exact copy should be retained by the registrant. Providing the information on the application is mandatory in order to register with the Commission as a bank municipal securities dealer. The information contained in the application will not be kept confidential.

An agency may not conduct or sponsor, and a person is not required to respond to, a collection of information under the PRA unless it displays a currently valid OMB control number.

The public may view background documentation for this information collection at the following website: *www.reginfo.gov.* Comments should be directed to: (i) Desk Officer for the Securities and Exchange Commission, Office of Information and Regulatory Affairs, Office of Management and Budget, Room 10102, New Executive Office Building, Washington, DC 20503, or by sending an email to: *Lindsay.M.Abate@omb.eop.gov*; and (ii) Charles Riddle, Acting Director/Chief Information Officer, Securities and Exchange Commission, c/o Candace Kenner, 100 F Street NE, Washington, DC 20549, or by sending an email to: *PRA_Mailbox@sec.gov.* Comments must be submitted to OMB within 30 days of this notice.

Dated: September 24, 2019.

Jill M. Peterson,

Assistant Secretary.

[FR Doc. 2019–21078 Filed 9–27–19; 8:45 am]

BILLING CODE 8011–01–P

[7] 17 CFR 200.30–3(a)(12).

SECURITIES AND EXCHANGE COMMISSION

[Release No. 34–87090; File No. SR–NYSEAMER–2019–27]

Self-Regulatory Organizations; NYSE American, LLC; Notice of Withdrawal of Proposed Rule Change To Amend the NYSE American Options Fee Schedule To Modify the Options Regulatory Fee

September 24, 2019.

On July 2, 2019, NYSE American, LLC (''Exchange'') filed with the Securities and Exchange Commission (''Commission''), pursuant to Section 19(b)(1) of the Securities Exchange Act of 1934 (''Act''),[1] and Rule 19b–4 thereunder,[2] a proposed rule change to amend the Exchange's fee schedule to modify the amount of its Options Regulatory Fee. The proposed rule change was immediately effective upon filing with the Commission pursuant to Section 19(b)(3)(A) of the Act.[3] The proposed rule change was published for comment in the **Federal Register** on July 22, 2019.[4] The Commission received one comment letter, which criticized the proposal.[5] On September August 30, 2019, pursuant to Section 19(b)(3)(C) of the Act, the Commission temporarily suspended the proposed rule change and instituted proceedings under Section 19(b)(2)(B) of the Act to determine whether to approve or disapprove the proposed rule change.[6] On September 16, 2019, the Exchange withdrew the proposed rule change (SR–NYSEAMER–2019–27).

For the Commission, by the Division of Trading and Markets, pursuant to delegated authority.[7]

Jill M. Peterson,

Assistant Secretary.

[FR Doc. 2019–21104 Filed 9–27–19; 8:45 am]

BILLING CODE 8011–01–P

[1] 15 U.S.C. 78s(b)(1).

[2] 17 CFR 240.19b–4.

[3] 15 U.S.C. 78s(b)(3)(A).

[4] *See* Securities Exchange Act Release No. 86391 (July 16, 2019), 84 FR 35165.

[5] *See* Letter to Vanessa Countryman, Secretary, Commission, from Ellen Greene, Managing Director, Securities Industry and Financial Markets Association, dated August 27, 2019.

[6] *See* Securities Exchange Act Release No. 86833, 84 FR 47029 (September 6, 2019).

[7] 17 CFR 200.30–3(a)(12).

SECURITIES AND EXCHANGE COMMISSION

[Release No. 34–87078; File No. SR–FINRA–2019–023]

Self-Regulatory Organizations; Financial Industry Regulatory Authority, Inc.; Notice of Filing and Immediate Effectiveness of a Proposed Rule Change To Extend the Pilot Period Related to FINRA Rule 6121.02 (Market-Wide Circuit Breakers in NMS Stocks)

September 24, 2019.

Pursuant to Section 19(b)(1) of the Securities Exchange Act of 1934 (''Act'') [1] and Rule 19b–4 thereunder,[2] notice is hereby given that on September 19, 2019, Financial Industry Regulatory Authority, Inc. (''FINRA'') filed with the Securities and Exchange Commission (''SEC'' or ''Commission'') the proposed rule change as described in Items I and II below, which Items have been prepared by FINRA. FINRA has designated the proposed rule change as constituting a ''non-controversial'' rule change under paragraph (f)(6) of Rule 19b–4 under the Act,[3] which renders the proposal effective upon receipt of this filing by the Commission. The Commission is publishing this notice to solicit comments on the proposed rule change from interested persons.

I. Self-Regulatory Organization's Statement of the Terms of Substance of the Proposed Rule Change

FINRA is proposing to extend the pilot period related to FINRA Rule 6121.02 (Market-wide Circuit Breakers in NMS Stocks).

The text of the proposed rule change is available on FINRA's website at *http://www.finra.org,* at the principal office of FINRA and at the Commission's Public Reference Room.

II. Self-Regulatory Organization's Statement of the Purpose of, and Statutory Basis for, the Proposed Rule Change

In its filing with the Commission, FINRA included statements concerning the purpose of and basis for the proposed rule change and discussed any comments it received on the proposed rule change. The text of these statements may be examined at the places specified in Item IV below. FINRA has prepared summaries, set forth in sections A, B, and C below, of the most significant aspects of such statements.

[1] 15 U.S.C. 78s(b)(1).

[2] 17 CFR 240.19b–4.

[3] 17 CFR 240.19b–4(f)(6).

A. Self-Regulatory Organization's Statement of the Purpose of, and Statutory Basis for, the Proposed Rule Change

1. Purpose

Rule 6121.02 addresses the circumstances under which FINRA shall halt trading in all NMS Stocks due to extraordinary market volatility (*i.e.,* market-wide circuit breakers). The market-wide circuit breaker (''MWCB'') mechanism under Rule 6121.02 was approved by the Commission to operate on a pilot basis, the term of which was to coincide with the pilot period for the Plan to Address Extraordinary Market Volatility Pursuant to Rule 608 of Regulation NMS (the ''LULD Plan''),[4] including any extensions to the pilot period for the LULD Plan.[5] The Commission recently approved an amendment to the LULD Plan for it to operate on a permanent, rather than pilot, basis.[6] In light of the proposal to make the LULD Plan permanent, FINRA amended Rule 6121.02 to untie the pilot's effectiveness from that of the LULD Plan and to extend the pilot's effectiveness to the close of business on October 18, 2019.[7]

FINRA now proposes to amend Rule 6121.02 to extend the pilot to the close of business on October 18, 2020. This filing does not propose any substantive or additional changes to Rule 6121.02. FINRA will use the extension period to develop with the other self-regulatory organizations (SROs) rules or procedures that would allow for the periodic testing of the performance of the MWCB mechanism. The extension also will permit FINRA to consider enhancements to the MWCB processes, such as modifications to the Level 3 process.

The market-wide circuit breaker under Rule 6121.02 provides an important, automatic mechanism that is invoked to promote stability and investor confidence during a period of significant stress when securities markets experience extreme broad-based declines. FINRA and the U.S. equity exchanges adopted uniform rules on a pilot basis relating to market-wide circuit breakers in 2012 (''MWCB Rules''), which are designed to slow the effects of extreme price movement through coordinated trading halts across securities markets when severe price declines reach levels that may exhaust market liquidity.[8] Market-wide circuit breakers provide for trading halts in all equities and options markets during a severe market decline as measured by a single-day decline in the S&P 500 Index.

Pursuant to Rule 6121.02, a market-wide trading halt will be triggered if the S&P 500 Index declines in price by specified percentages from the prior day's closing price of that index. Currently, the triggers are set at three circuit breaker thresholds: 7% (Level 1), 13% (Level 2), and 20% (Level 3). A market decline that triggers a Level 1 or Level 2 halt after 9:30 a.m. ET and before 3:25 p.m. ET would halt market-wide trading for 15 minutes, while a similar market decline at or after 3:25 p.m. ET would not halt market-wide trading. A market decline that triggers a Level 3 halt, at any time during the trading day, would halt market-wide trading until the primary listing market opens the next trading day.

FINRA has filed the proposed rule change for immediate effectiveness and has requested that the SEC waive the requirement that the proposed rule change not become operative for 30 days from the date of filing, so that FINRA can implement the proposed rule change immediately.

2. Statutory Basis

FINRA believes that the proposed rule change is consistent with the provisions of Section 15A(b)(6) of the Act,[9] which requires, among other things, that FINRA rules must be designed to prevent fraudulent and manipulative acts and practices, to promote just and equitable principles of trade, to remove impediments to and perfect the mechanism of a free and open market

[4] *See* Securities Exchange Act Release No. 67091 (May 31, 2012), 77 FR 33498 (June 6, 2012) (the ''Limit Up-Limit Down Release''). The LULD Plan provides a mechanism to address extraordinary market volatility in individual securities.

[5] *See* Securities Exchange Act Release Nos. 67090 (May 31, 2012), 77 FR 33531 (June 6, 2012) (Order Approving File No. SR–FINRA–2011–054); and 68778 (January 31, 2013), 78 FR 8668 (February 6, 2013) (Notice of Filing and Immediate Effectiveness of File No. SR–FINRA–2013–011) (Proposed Rule Change to Delay the Operative Date of FINRA Rule 6121.02).

[6] *See* Securities Exchange Act Release No. 85623 (April 11, 2019), 84 FR 16086 (April 17, 2019) (Order Approving the Eighteenth Amendment to the National Market System Plan To Address Extraordinary Market Volatility).

[7] *See* Securities Exchange Act Release No. 85547 (April 8, 2019), 84 FR 14981 (April 12, 2019) (Notice of Filing and Immediate Effectiveness of File No. SR–FINRA–2019–010).

[8] *See* Securities Exchange Act Release No. 67090 (May 31, 2012), 77 FR 33531 (June 6, 2012) (SR–BATS–2011–038; SR–BYX–2011–025; SR–BX–2011–068; SR–CBOE–2011–087; SR–C2–2011–024; SR–CHX–2011–30; SR–EDGA–2011–31; SR–EDGX–2011–30; SR–FINRA–2011–054; SR–ISE–2011–61; SR–NASDAQ–2011–131; SR–NSX–2011–11; SR–NYSE–2011–48; SR–NYSEAmex–2011–73; SR–NYSEArca–2011–68; SR–Phlx–2011–129) (Notice of Filing of Amendments No. 1 and Order Granting Accelerated Approval of Proposed Rule Changes as Modified by Amendments No. 1, Relating to Trading Halts Due to Extraordinary Market Volatility).

[9] 15 U.S.C. 78*o*–3(b)(6).

and a national market system, and, in general, to protect investors and the public interest. The market-wide circuit breaker mechanism under Rule 6121.02 is an important, automatic mechanism that is invoked to promote stability and investor confidence during a period of significant stress when securities markets experience extreme broad-based declines. Extending the market-wide circuit breaker pilot under Rule 6121.02 for an additional year would ensure the continued, uninterrupted operation of a consistent mechanism to halt trading across the U.S. markets while FINRA, with the other SROs, consider and develop rules or procedures that would allow for the periodic testing of the performance of the MWCB mechanism. The extension also will permit FINRA to consider enhancements to the MWCB processes, such as modifications to the Level 3 process.

FINRA also believes that the proposed rule change promotes just and equitable principles of trade in that it promotes transparency and uniformity across markets concerning when and how to halt trading in all stocks as a result of extraordinary market volatility. Based on the foregoing, FINRA believes the benefits to market participants from the MWCB under Rule 6121.02 should continue on a pilot basis because the MWCB will promote fair and orderly markets, and protect investors and the public interest.

B. Self-Regulatory Organization's Statement on Burden on Competition

FINRA does not believe that the proposed rule change will result in any burden on competition that is not necessary or appropriate in furtherance of the purposes of the Act because the proposal would ensure the continued, uninterrupted operation of a consistent mechanism to halt trading across the U.S. markets while FINRA, in conjunction with the other SROs, consider and develop rules or procedures that would allow for the periodic testing of the performance of the MWCB mechanism. Furthermore, as noted above, the extension will permit FINRA to consider enhancements to the MWCB processes, such as modifications to the Level 3 process.

Further, FINRA understands that other SROs will file proposals to extend their rules regarding the market-wide circuit breaker pilot. Thus, the proposed rule change will help to ensure consistency across market centers without implicating any competitive issues.

C. Self-Regulatory Organization's Statement on Comments on the Proposed Rule Change Received From Members, Participants, or Others

Written comments were neither solicited nor received.

III. Date of Effectiveness of the Proposed Rule Change and Timing for Commission Action

Because the foregoing proposed rule change does not: (i) Significantly affect the protection of investors or the public interest; (ii) impose any significant burden on competition; and (iii) become operative for 30 days from the date on which it was filed, or such shorter time as the Commission may designate, it has become effective pursuant to Section 19(b)(3)(A) of the Act [10] and Rule 19b–4(f)(6) thereunder.[11]

A proposed rule change filed under Rule 19b–4(f)(6) [12] normally does not become operative for 30 days after the date of filing. However, pursuant to Rule 19b–4(f)(6)(iii),[13] the Commission may designate a shorter time if such action is consistent with the protection of investors and the public interest. FINRA has asked the Commission to waive the 30-day operative delay so that the proposal may become operative upon filing. Extending the pilot for an additional year will allow the uninterrupted operation of the existing pilot to halt trading across the U.S. markets. Therefore, the Commission believes that waiving the 30-day operative delay is consistent with the protection of investors and the public interest. The Commission hereby designates the proposed rule change to be operative upon filing.[14]

At any time within 60 days of the filing of the proposed rule change, the Commission summarily may temporarily suspend such rule change if it appears to the Commission that such action is necessary or appropriate in the public interest, for the protection of investors, or otherwise in furtherance of the purposes of the Act. If the Commission takes such action, the Commission shall institute proceedings to determine whether the proposed rule should be approved or disapproved.

IV. Solicitation of Comments

Interested persons are invited to submit written data, views and arguments concerning the foregoing, including whether the proposed rule change is consistent with the Act. Comments may be submitted by any of the following methods:

Electronic Comments

- Use the Commission's internet comment form (*http://www.sec.gov/rules/sro.shtml*); or
- Send an email to *rule-comments@sec.gov*. Please include File Number SR–FINRA–2019–023 on the subject line.

Paper Comments

- Send paper comments in triplicate to Secretary, Securities and Exchange Commission, 100 F Street NE, Washington, DC 20549–1090.

All submissions should refer to File Number SR–FINRA–2019–023. This file number should be included on the subject line if email is used. To help the Commission process and review your comments more efficiently, please use only one method. The Commission will post all comments on the Commission's internet website (*http://www.sec.gov/rules/sro.shtml*). Copies of the submission, all subsequent amendments, all written statements with respect to the proposed rule change that are filed with the Commission, and all written communications relating to the proposed rule change between the Commission and any person, other than those that may be withheld from the public in accordance with the provisions of 5 U.S.C. 552, will be available for website viewing and printing in the Commission's Public Reference Room, 100 F Street NE, Washington, DC 20549, on official business days between the hours of 10 a.m. and 3 p.m. Copies of such filing also will be available for inspection and copying at the principal office of FINRA. All comments received will be posted without change. Persons submitting comments are cautioned that we do not redact or edit personal identifying information from comment submissions. You should submit only information that you wish to make available publicly. All submissions should refer to File Number SR–FINRA–2019–023 and should be submitted on or before October 21, 2019.

[10] 15 U.S.C. 78s(b)(3)(A). In addition, Rule 19b–4(f)(6) requires a self-regulatory organization to give the Commission written notice of its intent to file the proposed rule change at least five business days prior to the date of filing of the proposed rule change, or such shorter time as designated by the Commission. The Exchange has satisfied this requirement.

[11] 17 CFR 240.19b–4(f)(6).

[12] *Id.*

[13] 17 CFR 240.19b–4(f)(6)(iii).

[14] For purposes only of waiving the 30-day operative delay, the Commission has also considered the proposed rule's impact on efficiency, competition, and capital formation. See 15 U.S.C. 78c(f).

For the Commission, by the Division of Trading and Markets, pursuant to delegated authority.[15]

Jill M. Peterson,

Assistant Secretary.

[FR Doc. 2019–21102 Filed 9–27–19; 8:45 am]

BILLING CODE 8011–01–P

SECURITIES AND EXCHANGE COMMISSION

[Release No. 34–87077; File No. SR–NYSENAT–2019–21]

Self-Regulatory Organizations; NYSE National, Inc.; Notice of Filing and Immediate Effectiveness of Proposed Rule Change To Extend the Pilot Related to the Market-Wide Circuit Breaker in Rule 7.12

September 24, 2019.

Pursuant to Section 19(b)(1)[1] of the Securities Exchange Act of 1934 (the ''Act'')[2] and Rule 19b–4 thereunder,[3] notice is hereby given that on September 18, 2019, NYSE National, Inc. (''NYSE National'' or the ''Exchange'') filed with the Securities and Exchange Commission (the ''Commission'') the proposed rule change as described in Items I and II below, which Items have been prepared by the self-regulatory organization. The Commission is publishing this notice to solicit comments on the proposed rule change from interested persons.

I. Self-Regulatory Organization's Statement of the Terms of Substance of the Proposed Rule Change

The Exchange proposes to extend the pilot related to the market-wide circuit breaker in Rule 7.12. The proposed rule change is available on the Exchange's website at *www.nyse.com,* at the principal office of the Exchange, and at the Commission's Public Reference Room.

II. Self-Regulatory Organization's Statement of the Purpose of, and Statutory Basis for, the Proposed Rule Change

In its filing with the Commission, the self-regulatory organization included statements concerning the purpose of, and basis for, the proposed rule change and discussed any comments it received on the proposed rule change. The text of those statements may be examined at the places specified in Item IV below. The Exchange has prepared summaries, set forth in sections A, B, and C below, of the most significant parts of such statements.

A. Self-Regulatory Organization's Statement of the Purpose of, and the Statutory Basis for, the Proposed Rule Change

1. Purpose

Rule 7.12 provides a methodology for determining when to halt trading in all stocks due to extraordinary market volatility (*i.e.,* market-wide circuit breakers). The market-wide circuit breaker (''MWCB'') mechanism under Rule 7.12 was approved by the Commission to operate on a pilot basis,[4] the term of which was to coincide with the pilot period for the Plan to Address Extraordinary Market Volatility Pursuant to Rule 608 of Regulation NMS (the ''LULD Plan''),[5] including any extensions to the pilot period for the LULD Plan.[6] The Commission recently approved an amendment to the LULD Plan for it to operate on a permanent, rather than pilot, basis.[7] In light of the proposal to make the LULD Plan permanent, the Exchange amended Rule 7.12 to untie the pilot's effectiveness from that of the LULD Plan and to extend the pilot's effectiveness to the close of business on October 18, 2019.[8]

The Exchange now proposes to amend Rule 7.12 to extend the pilot to the close of business on October 18, 2020. This filing does not propose any substantive or additional changes to Rule 7.12. The Exchange will use the extension period to develop with the other SROs rules and procedures that would allow for the periodic testing of the performance of the MWCB mechanism, with industry member participation in such testing. The extension will also permit the exchanges to consider enhancements to the MWCB processes such as modifications to the Level 3 process.

The market-wide circuit breaker under Rule 7.12 provides an important, automatic mechanism that is invoked to promote stability and investor confidence during a period of significant stress when securities markets experience extreme broad-based declines. All U.S. equity exchanges and FINRA adopted uniform rules on a pilot basis relating to market-wide circuit breakers in 2012 (''MWCB Rules''), which are designed to slow the effects of extreme price movement through coordinated trading halts across securities markets when severe price declines reach levels that may exhaust market liquidity.[9] Market-wide circuit breakers provide for trading halts in all equities and options markets during a severe market decline as measured by a single-day decline in the S&P 500 Index.

Pursuant to Rule 7.12, a market-wide trading halt will be triggered if the S&P 500 Index declines in price by specified percentages from the prior day's closing price of that index. Currently, the triggers are set at three circuit breaker thresholds: 7% (Level 1), 13% (Level 2), and 20% (Level 3). A market decline that triggers a Level 1 or Level 2 halt after 9:30 a.m. ET and before 3:25 p.m. ET would halt market-wide trading for 15 minutes, while a similar market decline at or after 3:25 p.m. ET would not halt market-wide trading. A market decline that triggers a Level 3 halt, at any time during the trading day, would halt market-wide trading until the primary listing market opens the next trading day.

2. Statutory Basis

The Exchange believes that its proposal is consistent with Section 6(b) of the Act,[10] in general, and furthers the objectives of Section 6(b)(5) of the Act,[11] in particular, in that it is designed to promote just and equitable principles of trade, to remove impediments to and perfect the mechanism of a free and open market and a national market system, and, in general to protect investors and the public interest. The market-wide circuit breaker mechanism under Rule 7.12 is an important, automatic mechanism that is invoked to promote stability and investor confidence during a period of

[15] 17 CFR 200.30–3(a)(12).

[1] 15 U.S.C. 78s(b)(1).

[2] 15 U.S.C. 78a.

[3] 17 CFR 240.19b–4.

[4] *See* Securities Exchange Act Release No. 67090 (May 31, 2012), 77 FR 33531 (June 6, 2012) (SR–NSX–2011–11) (approving amendments to Rule 11.20A). Rule 7.12 replaced Rule 11.20A without any substantive differences. *See* Securities Exchange Act Release No. 83289 (May 17, 2018), 83 FR 23968 (May 23, 2018) (SR–NYSENAT–2018–02).

[5] *See* Securities Exchange Act Release No. 67091 (May 31, 2012), 77 FR 33498 (June 6, 2012). The LULD Plan provides a mechanism to address extraordinary market volatility in individual securities.

[6] *See* Securities Exchange Act Release Nos. 67090 (May 31, 2012), 77 FR 33531 (June 6, 2012) (SR–NSX–2011–11) (Approval Order); and 68779 (January 31, 2013), 78 FR 8638 (February 6, 2013) (SR–NSX–2013–04) (Notice of Filing and Immediate Effectiveness of Proposed Rule Change to Delay the Operative Date of Rule 11.20A).

[7] *See* Securities Exchange Act Release No. 85623 (April 11, 2019), 84 FR 16086 (April 17, 2019).

[8] *See* Securities Exchange Act Release No. 85572 (April 9, 2019), 84 FR 15257 (April 15, 2019) (SR–NYSENAT–2019–08).

[9] *See* Securities Exchange Act Release No. 67090 (May 31, 2012), 77 FR 33531 (June 6, 2012) (SR–BATS–2011–038; SR–BYX–2011–025; SR–BX–2011–068; SR–CBOE–2011–087; SR–C2–2011–024; SR–CHX–2011–30; SR–EDGA–2011–31; SR–EDGX–2011–30; SR–FINRA–2011–054; SR–ISE–2011–61; SR–NASDAQ–2011–131; SR–NSX–2011–11; SR–NYSE–2011–48; SR–NYSEAmex–2011–73; SR–NYSEArca–2011–68; SR–Phlx–2011–129) (''MWCB Approval Order'').

[10] 15 U.S.C. 78f(b).

[11] 15 U.S.C. 78f(b)(5).

significant stress when securities markets experience extreme broad-based declines. Extending the market-wide circuit breaker pilot for an additional year would ensure the continued, uninterrupted operation of a consistent mechanism to halt trading across the U.S. markets while the Exchange, with the other SROs, consider and develop rules and procedures that would allow for the periodic testing of the performance of the MWCB mechanism, which would include industry member participation in such testing. The extension will also permit the exchanges to consider enhancements to the MWCB processes such as modifications to the Level 3 process.

The Exchange also believes that the proposed rule change promotes just and equitable principles of trade in that it promotes transparency and uniformity across markets concerning when and how to halt trading in all stocks as a result of extraordinary market volatility. Based on the foregoing, the Exchange believes the benefits to market participants from the MWCB under Rule 7.12 should continue on a pilot basis because the MWCB will promote fair and orderly markets, and protect investors and the public interest.

B. Self-Regulatory Organization's Statement on Burden on Competition

The Exchange does not believe that the proposed rule change will impose any burden on competition not necessary or appropriate in furtherance of the purposes of the Act because the proposal would ensure the continued, uninterrupted operation of a consistent mechanism to halt trading across the U.S. markets while the Exchange, in conjunction with the other SROs, consider and develop rules and procedures that would allow for the periodic testing of the performance of the MWCB mechanism. Furthermore, as noted above, the extension will permit the exchanges to consider enhancements to the MWCB processes such as modifications to the Level 3 process.

Further, the Exchange understands that FINRA and other national securities exchanges will file proposals to extend their rules regarding the market-wide circuit breaker pilot. Thus, the proposed rule change will help to ensure consistency across market centers without implicating any competitive issues.

C. Self-Regulatory Organization's Statement on Comments on the Proposed Rule Change Received From Members, Participants, or Others

No written comments were solicited or received with respect to the proposed rule change.

III. Date of Effectiveness of the Proposed Rule Change and Timing for Commission Action

Because the proposed rule change does not: (i) Significantly affect the protection of investors or the public interest; (ii) impose any significant burden on competition; and (iii) become operative prior to 30 days from the date on which it was filed, or such shorter time as the Commission may designate, if consistent with the protection of investors and the public interest, the proposed rule change has become effective pursuant to Section 19(b)(3)(A) of the Act [12] and Rule 19b–4(f)(6)(iii) thereunder.[13]

At any time within 60 days of the filing of such proposed rule change, the Commission summarily may temporarily suspend such rule change if it appears to the Commission that such action is necessary or appropriate in the public interest, for the protection of investors, or otherwise in furtherance of the purposes of the Act. If the Commission takes such action, the Commission shall institute proceedings under Section 19(b)(2)(B) [14] of the Act to determine whether the proposed rule change should be approved or disapproved.

IV. Solicitation of Comments

Interested persons are invited to submit written data, views, and arguments concerning the foregoing, including whether the proposed rule change is consistent with the Act. Comments may be submitted by any of the following methods:

Electronic Comments

- Use the Commission's internet comment form (*http://www.sec.gov/rules/sro.shtml*); or
- Send an email to *rule-comments@sec.gov.* Please include File Number SR–NYSENAT–2019–21 on the subject line.

Paper Comments

- Send paper comments in triplicate to: Secretary, Securities and Exchange Commission, 100 F Street NE, Washington, DC 20549–1090.

All submissions should refer to File Number SR–NYSENAT–2019–21. This file number should be included on the subject line if email is used. To help the Commission process and review your comments more efficiently, please use only one method. The Commission will post all comments on the Commission's internet website (*http://www.sec.gov/rules/sro.shtml*). Copies of the submission, all subsequent amendments, all written statements with respect to the proposed rule change that are filed with the Commission, and all written communications relating to the proposed rule change between the Commission and any person, other than those that may be withheld from the public in accordance with the provisions of 5 U.S.C. 552, will be available for website viewing and printing in the Commission's Public Reference Room, 100 F Street NE, Washington, DC 20549 on official business days between the hours of 10:00 a.m. and 3:00 p.m. Copies of the filing also will be available for inspection and copying at the principal office of the Exchange. All comments received will be posted without change. Persons submitting comments are cautioned that we do not redact or edit personal identifying information from comment submissions. You should submit only information that you wish to make available publicly. All submissions should refer to File Number SR–NYSENAT–2019–21 and should be submitted on or before October 21, 2019.

For the Commission, by the Division of Trading and Markets, pursuant to delegated authority.[15]

Jill M. Peterson,

Assistant Secretary.

[FR Doc. 2019–21101 Filed 9–27–19; 8:45 am]

BILLING CODE 8011–01–P

[15] 17 CFR 200.30–3(a)(12).

[1] 15 U.S.C. 78s(b)(1).

[2] 17 CFR 240.19b–4.

[3] 15 U.S.C. 78s(b)(3)(A)(iii).

SECURITIES AND EXCHANGE COMMISSION

[Release No. 34–87072; File No. SR–CBOE–2019–045]

Self-Regulatory Organizations; Cboe Exchange, Inc.; Notice of Filing and Immediate Effectiveness of a Proposed Rule Change To Amend the AIM Automated Improvement Mechanism Upon the Migration of the Exchange's Trading Platform to the Same System Used by the Cboe Affiliated Exchanges

September 24, 2019.

Pursuant to Section 19(b)(1) of the Securities Exchange Act of 1934 (the ''Act''),[1] and Rule 19b–4 thereunder,[2] notice is hereby given that on September 11, 2019, Cboe Exchange, Inc. (the ''Exchange'' or ''Cboe Options'') filed with the Securities and Exchange Commission (the ''Commission'') the proposed rule change as described in Items I, II, and III below, which Items have been prepared by the Exchange. The Exchange filed the proposal as a ''non-controversial'' proposed rule change pursuant to Section 19(b)(3)(A)(iii) of the Act[3] and Rule 19b–4(f)(6) thereunder.[4] The Commission is publishing this notice to solicit comments on the proposed rule change from interested persons.

I. Self-Regulatory Organization's Statement of the Terms of Substance of the Proposed Rule Change

Cboe Exchange, Inc. (the ''Exchange'' or ''Cboe Options'') proposes to amend the Automated Improvement Mechanism (''AIM'') and move it from the currently effective Rulebook (''current Rulebook'') to the shell structure for the Exchange's Rulebook that will become effective upon the migration of the Exchange's trading platform to the same system used by the Cboe Affiliated Exchanges (as defined below) (''shell Rulebook''). The text of the proposed rule change is provided in Exhibit 5.

The text of the proposed rule change is also available on the Exchange's website (*http://www.cboe.com/AboutCBOE/CBOELegalRegulatoryHome.aspx*), at the Exchange's Office of the Secretary, and at the Commission's Public Reference Room.

II. Self-Regulatory Organization's Statement of the Purpose of, and Statutory Basis for, the Proposed Rule Change

In its filing with the Commission, the Exchange included statements concerning the purpose of and basis for the proposed rule change and discussed any comments it received on the proposed rule change. The text of these statements may be examined at the places specified in Item IV below. The Exchange has prepared summaries, set forth in sections A, B, and C below, of the most significant aspects of such statements.

A. Self-Regulatory Organization's Statement of the Purpose of, and Statutory Basis for, the Proposed Rule Change

1. Purpose

In 2016, the Exchange's parent company, Cboe Global Markets, Inc. (formerly named CBOE Holdings, Inc.) (''Cboe Global''), which is also the parent company of Cboe C2 Exchange, Inc. (''C2''), acquired Cboe EDGA Exchange, Inc. (''EDGA''), Cboe EDGX Exchange, Inc. (''EDGX'' or ''EDGX Options''), Cboe BZX Exchange, Inc. (''BZX'' or ''BZX Options''), and Cboe BYX Exchange, Inc. (''BYX'' and, together with Cboe Options, C2, EDGX, EDGA, and BZX, the ''Cboe Affiliated Exchanges''). The Cboe Affiliated Exchanges are working to align certain system functionality, retaining only intended differences between the Cboe Affiliated Exchanges, in the context of a technology migration. Cboe Options intends to migrate its trading platform to the same system used by the Cboe Affiliated Exchanges, which the Exchange expects to complete on October 7, 2019. Cboe Options believes offering similar functionality to the extent practicable will reduce potential confusion for market participants.

In connection with this technology migration, the Exchange has a shell Rulebook that resides alongside its current Rulebook, which shell Rulebook will contain the Rules that will be in place upon completion of the Cboe Options technology migration. The Exchange proposes to delete Rule 6.74A in the current Rulebook and add the provisions regarding AIM Auctions for simple orders, as proposed to be modified in this rule filing, to Rule 5.37 in the shell Rulebook.[5]

The proposed rule change clarifies in the proposed introductory paragraph[6] that the Initiating Order may consist of one or more solicited orders. This accommodates multiple contra-parties and increases the opportunities for customer orders to be submitted into an AIM Auction with the potential for price improvement, since the Initiating Order must stop the full size of the Agency Order. This has no impact on the execution of the Agency Order, which may already trade against multiple contra-parties depending on the final auction price, as set forth in proposed paragraph (e). This proposed change is consistent with the Exchange's current interpretation of current Rule 6.74A, and the proposed rule change clarifies this in the Rule.[7] The proposed rule change moves the restriction that a solicited order cannot be for the account of any Market-Maker appointed in the class from current Interpretation and Policy .04 to the proposed introductory paragraph.

Proposed Rule 5.37(a)(5) states the Trading Permit Holder that electronically submits an order into an AIM Auction (the ''Initiating TPH'') may not designate an Agency Order or Initiating Order as Post Only. A Post Only order is an order the System ranks and executes pursuant to proposed Rule 5.32, subjects to the Price Adjust process pursuant to Rule 5.32, or cancels or rejects (including if it is not subject to the Price Adjust process and locks or crosses a Protected Quotation of another exchange), as applicable (in accordance with User instructions), except the order or quote may not remove liquidity from the Book or route away to another Exchange. The Exchange does not currently offer Post Only order functionality, but will as of the technology migration.[8] The Exchange believes it is appropriate to not permit the Agency or Initiating Order to be designated as Post Only, as the purpose of a Post Only order is to not execute upon entry and instead rest

[1] 15 U.S.C. 78s(b)(3)(A)(iii).

[2] 17 CFR 240.19b–4(f)(6).

[3] 15 U.S.C. 78s(b)(3)(A)(iii).

[4] 17 CFR 240.19b–4(f)(6).

[5] Proposed Rule 5.37 is substantially the same as EDGX Options Rule 21.19, except as otherwise described below.

[6] The proposed rule change also adds to the proposed introductory paragraph that for purposes

[5] Proposed Rule 5.37 is substantially the same as EDGX Options Rule 21.19, except as otherwise described below.

[6] The proposed rule change also adds to the proposed introductory paragraph that for purposes of proposed Rule 5.37, the term ''NBBO'' means the national best bid or offer at the particular point in time applicable to the reference, and the term ''Initial NBBO'' means the national best bid or national best offer at the time an AIM Auction is initiated. This is merely an addition of terminology used throughout the Rule, but has no impact on functionality.

in the Book, while the purpose of an AIM Auction is to receive an execution following the Auction but prior to entering the Book.

Proposed Rule 5.37(a)(6) states the Initiating TPH may only submit an Agency Order to an AIM Auction after the market open. This is consistent with current functionality, as executions cannot occur prior to the opening of trading. The proposed rule change clarifies this in the Rule.

Proposed Rule 5.37(a)(7) states the Initiating TPH may not submit an Agency Order if the NBBO is crossed (unless the Agency Order is an AIM Intermarket Sweep Order (''AIM ISO'') or Sweep and AIM order (see discussion below). This is consistent with current functionality, and the proposed rule change clarifies this in the Rule. The Exchange believes it is appropriate to not permit an AIM Auction to be initiated if the NBBO is crossed, as a crossed NBBO may indicate price uncertainty within the market. The Exchange believes this may prevent executions at potentially erroneous prices.

The proposed rule change moves the various other AIM Auction eligibility requirements to proposed paragraph (a) and makes nonsubstantive changes:

- The requirement that an Agency Order be in a class of options the Exchange designates as eligible for AIM Auctions remains in subparagraph (a)(1).[9]
- The requirement that the Initiating TPH mark an Agency Order for AIM processing moves from current subparagraph (b)(1)(A) to proposed subparagraph (a)(2).
- The provision that there is no minimum size for Agency Orders moves from current Interpretation and Policy .03 to proposed subparagraph (a)(3). Additionally, the requirement that the Initiating Order be for the same size as the Agency Order moves from current subparagraphs (a)(2) and (a)(3) to proposed subparagraph (a)(3).
- The provision regarding the minimum increment for the Agency Order and Initiating Order price moves from current subparagraph (a)(3) to proposed subparagraph (a)(4). As further discussed below, the proposed rule change deletes he requirement that during Regular Trading Hours, at least three Market-Makers with an appointment in the class are quoting in the relevant series to initiate an AIM Auction moves from current subparagraph (a)(4). The proposed rule change also explicitly states that all of the eligibility requirements in proposed paragraph (a) must be met for an AIM Auction to be initiated, and that the System rejects or cancels both an Agency Order and Initiating Order submitted to an AIM Auction that do not meet the conditions in proposed paragraph (a).

Proposed subparagraph (b)(2) states if the Agency Order is to buy (sell), the stop price must be at least one minimum increment better than the Exchange best bid (offer), unless the Agency Order is a Priority Customer order and the resting order is not a Priority Customer, in which case the stop price must be at or better than the Exchange best bid (offer). Current Rule 6.74A(b)(3)(I) states if the final auction price locks a Priority Customer order in the Book on the same side of the market as the Agency Order, then, unless there is sufficient size in the Auction responses to execute both the Agency Order and the booked Priority Customer order (in which case they will both execute at the final auction price), the Agency Order will execute against the auction responses at one minimum increment worse than the final auction price against the auction participants that submitted the final auction price and any balance will trade against the priority customer order in the book at the order's limit price. The proposed rule change protects Priority Customers on the same side of the Book as the current rule does, except it does so by applying a check at the initiation of an AIM Auction rather than at the conclusion of an AIM Auction. By permitting a Priority Customer Agency Order to trade at the same price as a resting non-Priority Customer order, the proposed rule change also protects Priority Customer orders submitted into an AIM Auction. Additionally, application of this check at the initiation of an AIM Auction may result in the Agency Order executing at a better price, since the stop price must improve any same-side orders (with the exception of a Priority Customer Agency Order and a resting non-Priority Customer order described above), as under the current Rule, the Agency Order may execute at one minimum increment worse. The proposed rule change is consistent with general customer priority principles.

The proposed rule change adds subparagraph (b)(3), which states if there is a buy (sell) all-or-none (''AON'') order (either Priority Customer or non-Priority Customer) resting on the Book at a price at or better than the Exchange best bid (offer), the stop price must be at least one minimum increment higher (lower) than the price of the buy (sell) AON order. The following examples demonstrate this proposed functionality:

Example #1

Suppose the BBO for a series is 1.00 to 1.05, and an AON order to sell is resting on the Book at an offer price of 1.04. An Initiating TPH submits an Agency Order to buy paired with an Initiating Order at a stop price of 1.04. The System will reject the Agency Order and Initiating Order, because the stop price equals the offer price of a resting sell AON Order on the Book (which offer price is lower than the Exchange best offer).

Example #2

Suppose the BBO for a series is 1.00 to 1.05, and an AON order to sell is resting on the Book at an offer price of 1.01. An Initiating TPH submits an Agency Order to buy paired with an Initiating Order at a stop price of 1.02. The System will reject the Agency Order and Initiating Order, because the stop price is higher than the offer price of a resting sell AON Order on the Book (which offer price is better than the Exchange best offer).

Example #3

Suppose the BBO for a series is 1.00 to 1.05, and an AON order to sell is resting on the Book at an offer price of 1.01. An Initiating TPH submits an Agency Order to sell paired with an Initiating Order at a stop price of 1.02. The System will reject the Agency Order and Initiating Order, because the stop price is higher than the offer price of a resting sell AON Order on the Book (which offer price is better than the Exchange best offer).

As discussed below, due to technical complexities, AON orders resting on the Book at the conclusion of an AIM Auction will not be eligible for execution against the Agency Order. If the Exchange were to initiate an AIM Auction for a buy Agency Order at a stop price equal to or through the price of a resting AON order on the opposite side of the Book, and that AON order were not eligible for execution against the Agency Order (if the stop price was the final auction price), that marketable

[9] The proposed rule change deletes the provision that the Agency Order be within the designated Auction order eligibility size parameters determined by the Exchange, as the current and proposed rule explicitly state any applicable size parameters, as discussed below. Additionally, the Exchange will announce all determinations it may make with respect to an AIM Auction pursuant to Rule 1.2 in the current Rulebook (Rule 1.5 in the shell Rulebook), and therefore deletes current Interpretation and Policy .05 (and other provisions regarding how the Exchange will announce these determinations).

AON order would miss a potential execution opportunity that it could have had if an auction had not occurred (assuming its size contingency could be met after execution of all other interest).[10] Therefore, the Exchange believes the proposed rule change will protect AON orders resting on the Book at the time an AIM Auction begins.

The proposed rule change moves and makes nonsubstantive changes to the other provisions regarding the requirements for the price at which the Initiating Order must stop the entire Agency Order in proposed paragraph (b):

• The requirement that the stop price must be (1) at least one minimum increment better than the then-current NBBO or the Agency Order's limit price (if the order is a limit order), whichever is better, if the Agency Order is for less than 50 standard option contracts (or 500 mini-option contracts); or (2) at or better than the then-current NBBO) or the Agency Order's limit price, whichever is better, if the Agency Order is for 50 standard option contracts (or 500 mini-option contracts) or more, moves from current subparagraphs (a)(2) and (3) to proposed subparagraph (b)(1).

• The provisions that require the Initiating TPH to specify (1) a single price at which it seeks to execute the Agency Order against the Initiating Order (a ''single-price submission''), including whether it elects to have last priority in allocation; or (2) an initial stop price and instruction to automatically match the price and size of all AIM responses and other contra-side trading interest (''auto-match'') at each price up to a designated limit price, or at all prices, better than the price at which the balance of the Agency Order can be fully executed (the ''final auction price'') move from current subparagraph (b)(1)(A) to proposed subparagraph (b)(5).

• The descriptions of AIM Sweep orders and Sweep and AIM orders move from current Rule 6.53 to proposed Rule 5.37(b)(4). The proposed rule change explicitly states that AIM responses, the stop price, and executions are permitted at a price inferior to the Initial NBBO if the Initiating TPH submits an AIM Sweep or Sweep and AIM Order to an AIM Auction, but the stop price is still subject to the price improvement requirement described above if the Agency Order is for less than 50 standard option contracts (or 500 mini-option contracts).[11] The proposed rule change adds that the two orders submitted as a Sweep and AIM order may not both be for the accounts of Priority Customers. Unlike an AIM ISO (for which the Initiating TPH sends an ISO),[12] the Exchange sends the ISO for a Sweep and AIM order and then receives the fill report for the ISO during the AIM Auction period, so it knows by the end of the AIM Auction how much of the Agency Order is left for execution against contra-interest on the Exchange. If both orders were for Priority Customers, they would immediately cross pursuant to paragraph (f) (as described below), prior to the Exchange receiving information regarding the size of any executions on away exchanges (and thus prior to knowing the NBBO that price of the immediate cross should have traded through). Not permitting pairs of Priority Customer orders to be submitted as Sweep and AIM orders ensures that the Agency Order is not oversubscribed, which can be prevented if there is an AIM Auction period, and that the immediate cross occurs at a price at or better than the NBBO. TPHs can submit these pairs of orders through the AIM Auction process. The Exchange believes there is minimal demand to submit pairs of Priority Customer orders as Sweep and AIM orders.

The proposed rule change also explicitly states that all of the conditions in proposed paragraph (b) must be met for an AIM Auction to be initiated, and that the System rejects or cancels both an Agency Order and Initiating Order submitted to an AIM Auction that do not meet the conditions in proposed paragraph (b).

Proposed paragraph (c) describes the AIM Auction process. Currently, only one AIM auction may be ongoing at any given time in a series, and AIM Auctions in the same series may not queue or overlap in any manner. Proposed subparagraph (c)(1) states with respect to Agency Orders for less than 50 standard option contracts (or 500 mini-option contracts), only one AIM Auction may be ongoing at any given time in a series, and AIM Auctions in the same series may not queue or overlap in any manner. Therefore, the proposed rule change has no impact on these smaller Agency Orders. However, for Agency Orders of 50 standard option contracts (or 500 mini-option contracts) or more, the proposed rule change states one or more AIM Auctions in the same series may occur at the same time. To the extent there is more than one AIM Auction in a series underway at a time, the AIM Auctions conclude sequentially based on the exact time each AIM Auction commenced, unless terminated early pursuant to paragraph (d). At the time each AIM Auction concludes, the System allocates the Agency Order pursuant to paragraph (e) and takes into account all AIM Auction responses and unrelated orders and quotes in place at the exact time of conclusion. In the event there are multiple AIM Auctions underway that are each terminated early pursuant to paragraph (d), the System processes the AIM Auctions sequentially based on the exact time each AIM Auction commenced. The Exchange believes the proposed new functionality may lead to an increase in AIM Auctions, which may provide additional opportunities for price improvement for Agency Orders.

The proposed rule change moves and makes nonsubstantive changes to other provisions regarding the AIM Auction process to proposed paragraph (c):

• The proposed rule change moves the provision regarding the AIM Auction notification message (currently called a request for responses (''RFR'')) from current subparagraph (b)(1)(B) to proposed subparagraph (c)(2). The proposed provision specifies that the message will detail the side, size, Auction ID, and options series of the Agency Order to all Users that elect to receive AIM Auction notification messages. This is consistent with the current RFR that is disseminated; the proposed rule change adds these details to the rule. The proposed rule change also adds that AIM Auction notification messages are not included in the disseminated BBO or OPRA, which is also consistent with current functionality.

• The proposed rule change moves the provision regarding the length of the AIM Auction period from current subparagraph (b)(1)(C) to proposed subparagraph (c)(3). The proposed rule change makes no changes to the current range of permitted lengths of AIM Auction periods.

• The proposed rule change moves the provision that prohibits an Initiating TPH from modifying or cancelling an

[10] *See* Rule 6.45(a)(v) in the current Rulebook (Rule 5.32(a)(3)(C) in the shell Rulebook) (which provides that an AON order is always last in priority).

[11] Rule filing SR–CBOE–2019–027 deleted the definitions of AIM Sweep and Sweep and AIM orders from the current Rulebook, which deletion will not take effect until the completion of the technology migration, at which time the proposed rule change will take effect.

[12] TPHs are responsible for sending the ISO order for an AIM ISO, and thus the Exchange does not need to wait for a fill report for the ISO. Because it is a TPH's responsibility to send the ISO, and thus account for any executions resulting from that ISO at away exchanges (and the resulting NBBO), the proposed rule change does not prohibit pairs of Priority Customer orders to be submitted as an AIM ISO. However, the Exchange believes there is minimal demand for use of this order type for pairs of Priority Customer orders.

Agency Order or Initiating Order after submission to an AIM Auction from current subparagraph (b)(1)(A) to proposed subparagraph (c)(4).

The proposed rule change also moves all provisions regarding AIM Auction responses into proposed subparagraph (c)(5), as well as makes certain changes described below, as well as nonsubstantive changes:

• The proposed rule change moves the provision regarding which market participants may respond to AIM Auctions, as well as what must be specified in the responses (including price, size, side, and Auction ID) from current subparagraphs (b)(1)(D) and (E) to proposed subparagraph (c)(5). The current rule specifies that responses must specify prices and sizes; the proposed rule change adds responses must also specify side and an Auction ID. The proposed rule change adds that an AIM response may only participate in the AIM Auction with the Auction ID specified in the response. This is consistent with current functionality.[13] The Exchange proposes to include this language given the above proposal that permits concurrent AIM Auctions in the same series for larger Agency Orders.

Currently, only Market-Makers with an appointment in the applicable class and TPHs representing orders as agent at the top of the Book may respond to AIM Auctions.[14] The Exchange proposes to permit all Users to respond to AIM Auctions. By permitting additional participants to submit responses to AIM Auctions, the Exchange believes this may provide the opportunity for additional liquidity in these auctions, which could lead to additional price improvement opportunities. EDGX Options similarly permits all Users to respond to AIM Auctions.[15] In connection with this change, the proposed rule change deletes the requirement in current Rule 6.74A(a)(4) that during Regular Trading Hours, at least three Market-Makers with an appointment in the class be quoting in the relevant series to initiate a simple AIM Auction. The purpose of this requirement was to ensure there were a minimum number of Market-Makers active in a series and thus available to potentially submit responses to an AIM Auction and provide liquidity to simple AIM Auctions, given the restriction on market participants that may respond to those Auctions. Given the proposed rule change to open AIM Auctions up to all Users, the Exchange believes the three-quoter requirement is no longer necessary.

• The proposed rule change moves the provision regarding the permissible minimum increment for AIM responses from current subparagraph (b)(1)(G) to proposed subparagraph (c)(5)(A).

• Proposed subparagraph (c)(5)(B) states AIM buy (sell) responses are capped at the Exchange best offer (bid), or one minimum increment better than the Exchange best offer (bid) if it is represented by a Priority Customer on the Book (unless the Agency Order is an AIM ISO or Sweep and AIM) that exists at the conclusion of the AIM Auction. The System will execute AIM responses, if possible, at the most aggressive permissible price not outside the BBO at the conclusion of the AIM Auction or the Initial NBBO. This is consistent with current subparagraph (b)(1)(E). The proposed rule change ensures the execution price of a response will not cross the Initial NBBO in accordance with linkage rules.[16] Additionally, proposed subparagraph (e) requires the execution price to be at or between the BBO at the conclusion of the AIM Auction. Therefore, as proposed, the price at which any response may execute will ultimately not be through the Initial NBBO or the BBO at the conclusion of the AIM Auction.

• Proposed subparagraph (c)(5)(C) states a User may submit multiple AIM responses at the same or multiple prices to an AIM Auction. This is consistent with current functionality. Current Rule 6.74A contains no restriction on how many responses a User may submit; the proposed rule change merely makes this explicit in the Rules. The proposed rule change also states for purposes of an AIM Auction, the System aggregates all of a User's orders and quotes on the Book and AIM responses for the same EFID at the same price. This (combined with the proposed size cap) will prevent a User from submitting multiple orders, quotes, or responses at the same price to obtain a larger pro-rata share of the Agency Order.

• Proposed subparagraph (c)(5)(D) states the System caps the size of an AIM response, or the aggregate size of a User's orders and quotes on the Book and AIM responses for the same EFID at the same price, at the size of the Agency Order (*i.e.,* the System ignores size in excess of the size of the Agency Order when processing the AIM Auction). This is consistent with current subparagraph (b)(1)(H), except the proposed rule change caps the aggregate size of a User's interest at the same price, rather than the size of an individual response. The Exchange believes this is reasonable to prevent a User from submitting an order, quote, or response with an extremely large size in order to obtain a larger pro-rata share of the Agency Order.

• Proposed subparagraph (c)(5)(E) states AIM responses must be on the opposite side of the market as the Agency Order, and the System rejects an AIM response on the same side of the market as the Agency Order. This is consistent with current functionality, and the proposed rule change merely adds this detail to the rules. Additionally, the Exchange believes this is reasonable given that the purpose of an AIM response is to trade against the Agency Order in the AIM Auction into which the AIM response was submitted.

• Proposed subparagraph (c)(5)(F) states AIM responses may be designated with the match trade prevention (''MTP'') modifier of MTP Cancel Newest, but no other MTP modifiers, and the System rejects an AIM response with any other MTP modifier.[17] An incoming order marked with MTP Cancel Newest will not execute against opposite side interest marked with any MTP modifier originating from the same Unique Identifier, and the incoming order (the AIM response in this case) will be cancelled back to the originating User. If an Agency Order and response have the same Unique Identifier and an MTP modifier, the System will cancel the response and permit the Agency Order to execute against other interest. This is consistent with the prohibition on the Agency Order being cancelled after it is submitted.

• Proposed subparagraph (c)(5)(G) states AIM responses may not be designated as immediate-or-cancel (''IOC'') or fill-or-kill (''FOK'') and the System rejects an AIM response

[13] Current subparagraph (b)(3)(K) permits an unexecuted balance of an AIM Auction response after the Agency Order has been executed and the balance to trade against any unrelated order(s) that cause the AIM Auction to conclude. The proposed rule change deletes that provision given the proposed rule change to permit concurrent auctions, as described above, and thus the requirement that responses may only trade with an Agency Order in the AIM Auction into which the AIM response was submitted. If a responder wishes to execute interest against any orders that caused an AIM Auction to conclude and that are resting in the Book, that responder may separately submit an order to the Exchange.

[14] *See* current Rule 6.74A(b)(1)(D) and (E).

[15] *See* EDGX Options Rule 21.19(c)(5).

[16] *See* current Rule 6.81(b)(8) (proposed Rule 5.66(b)(8)) (requires an order to be stopped at a price no worse than the price at the time of receipt of the order).

[17] *See* Rule 5.6(c) in the shell Rulebook for definitions of the various types of MTP Modifiers that will be available on the Exchange as of the System migration. The Exchange does not currently have any equivalent to an MTP modifier that may be applied to orders or auction responses.

designated as IOC or FOK.[18] This is consistent with the purpose of an AIM response, which is to potentially execute against an Agency Order at the conclusion of an AIM Auction (and thus not immediately upon entry, as required by the times-in-force of IOC and FOK).[19]

• The provision that states AIM responses are not visible to AIM Auction participants or disseminated to OPRA moves from current subparagraph (b)(1)(F) to proposed subparagraph (c)(5)(H).

• The provision that states AIM responses may be cancelled moves from current subparagraph (b)(1)(I) to proposed subparagraph (c)(5)(I). The proposed rule change also clarifies that AIM responses may be modified (which is consistent with current functionality and merely clarified in the rules).[20]

Proposed paragraph (d) states that an AIM Auction concludes at the earliest to occur of the following times:

• The end of the AIM Auction period (consistent with current subparagraph (b)(2)(A);

• upon receipt by the System of a Priority Customer order on the same side of the market with a price the same as or better than the stop price that would post to the Book;

• upon receipt by the System of an unrelated order or quote, including a Post Only order or quote, that is not a Priority Customer order on the same side of the market as the Agency Order that would cause the stop price to be outside of the BBO;

• the market close (consistent with current functionality and merely added to the rules); and

• any time the Exchange halts trading in the affected series, provided, however, that in such instance the AIM Auction concludes without execution (consistent with current subparagraph (b)(2)(F), and the proposed rule change adds detail that an AIM Auction in such a case will conclude without execution, which is consistent with current functionality, as no executions may occur while a series is halted for trading).

The proposed rule change deletes the following events that currently cause an AIM Auction to conclude early:

• Upon receipt by the System of an unrelated order (in the same series as the Agency Order) that is marketable against either the BBO (when such quote is the NBBO) or the RFR responses;

• upon receipt by the System of an unrelated limit order (in the same series as the Agency Order and on the opposite side of the market as the Agency Order) that improves any RFR responses; and

• any time there is a quote lock on the Exchange pursuant to current Rule 6.45(c).

As discussed below, unrelated orders on the opposite side of the Agency Order received during the AIM Auction may execute against interest outside of the AIM Auction, and therefore, the Exchange will no longer terminate an AIM Auction due to the receipt of an order on the opposite side of the Agency Order.[21] The proposed rule change to conclude an AIM Auction early upon receipt of certain orders on the same side as the Agency Order ensure that the execution price does not occur at the same price as a Priority Customer order on the Book or at a price worse on than a non-Priority Customer order on the Book. This is consistent with the requirements for the stop price described above. Additionally, the Exchange will not have quote lock functionality following the technology migration, and therefore proposes to delete that as an event that may cause an AIM Auction to terminate early.[22]

An unrelated market or marketable limit order (against the BBO), including a Post Only Order, on the opposite side of the Agency Order received during the AIM Auction does not cause the AIM Auction to end early and executes against interest outside of the AIM Auction. If contracts remain from such unrelated order at the time the AIM Auction ends, they may be allocated for execution against the Agency Order pursuant to proposed paragraph (e). Because these orders may have the opportunity to trade against the Agency Order following the conclusion of the AIM Auction, which execution must still be at or better than the Initial NBBO and BBO at the conclusion of the AIM Auction, the Exchange does not believe it is necessary to cause an AIM Auction to conclude early in the event the Exchange receives such orders. This will provide more time for potential price improvement, and the unrelated order will have the opportunity to trade against the Agency Order in the same manner as all other contra-side interest.

Proposed paragraph (e) describes how the System will allocate contra-side interest against the Agency Order at the best price(s), which provisions are in current subparagraph (b)(3) and moved to proposed paragraph (e).[23] Proposed paragraph (e) also clarifies that any execution price(s) must be at or better than both sides of the BBO existing at the conclusion of the AIM Auction (consistent with current Rules that require executions to occur at or better than the best prices available on the Exchange's Book) and at or better than both sides of the Initial NBBO (consistent with linkage rules). The proposed allocations following each potential outcome of an AIM Auction are substantially the same as the current allocations.[24] Priority Customer orders in the Book will continue to have first priority at each price level. With respect to the entitlement for the Initiating Order, the applicable percentage will be based on the number of other Users at the same price rather than the number of appointed Market-Makers and Trading Permit Holders acting as agent for an order resting at the top of the Book opposite the Agency order. The proposed rule change also codifies that the allocation percentages are based on the number of contracts remaining after execution against Priority Customer orders, which is consistent with current functionality but not currently specified in Rule 6.74A.[25] This proposed change will provide additional opportunities for other Users to have their interest execute against the Agency Order.[26]

[18] *See* Rule 5.6(d) in the shell Rulebook. Current AIM response functionality does not permit a User to apply these order instructions to AIM responses.

[19] If a user designates an AIM response as Post Only, the System accepts the response but disregards the Post Only instruction, as the response (like all AIM responses) will execute against the Agency Order or cancel at the conclusion of the AIM Auction. In an AIM Auction, the Agency Order is treated as a taker of liquidity, while a response is treated like a maker of liquidity, and therefore responses are consistent with the purpose of a Post Only order instructions (which is to not remove liquidity from the Book upon entry).

[20] Proposed subparagraph (e)(6) states the System will cancel or reject any unexecuted AIM responses (or unexecuted portions) at the conclusion of the AIM Auction.

[21] The proposed rule change also deletes current subparagraphs (b)(3)(D) and (E), as they relate to the handling of orders that currently terminate an AIM Auction but will no longer terminate an AIM Auction as proposed.

[22] *See* SR–CBOE–2019–033 (proposed rule change in which the Exchange deletes quote lock functionality).

[23] The proposed rule change adds to the provision regarding last priority (which the proposed rule change moves from current subparagraph (b)(3)(J) to proposed subparagraph (e)(5)) that last priority information is not available to other market participants and may not be modified after it is submitted.

[24] *See* current subparagraph (b)(3).

[25] This proposed change will ensure the size used to determine the allocation percentage for the Initiating Order will be based on the same number of contracts that would otherwise be available to other contra-side interest. It is also the same as other options exchanges. *See, e.g.,* ISE Rule 723(d)(2); and MIAX Rule 515A, Interpretation and Policy .11.

[26] The proposed rule change also adds that under no circumstances does the Initiating TPH receive an allocation percentage, at the price at which the balance of the Agency Order can be fully executed

Continued

Current subparagraph (b)(3)(H) provides that if the AIM Auction does not result in price improvement over the Exchange's disseminated price at the time the AIM Auction began, resting unchanged quotes or orders that were disseminated at the best price before the AIM Auction began will have priority after any Priority Customer orders and the Initiating TPH's priority have been satisfied. The proposed rule change defines these resting displayed quotes and orders as Priority Orders, and provides that these orders will have priority at each price level, not just the Initial NBBO.[27] The Exchange believes giving these orders and quotes priority encourages market participants to display their best bids and offers.

The proposed rule change clarifies that AON orders will have last priority at price levels better than the stop price following the conclusion of an AIM Auction if there is sufficient size to satisfy the size of the AON order (with Priority Customer AON order trading ahead of non-Priority Customer AON orders). AON orders (both Priority Customer and non-Priority Customer) resting at the final auction price (which may be the stop price if there is no price improvement) at the conclusion of the AIM Auction do not trade against the Agency Order, even if the Initiating Member of an AIM auction selects last priority.[28] The Exchange notes there would be significant technical complexities associated with reprogramming priority within the System to provide AON orders with second to last priority in a specific (and likely uncommon situation), as would be required to permit AON orders to execute at the final auction price (which may be the stop price), even if the Initiating TPH selects last priority. As noted above, the Exchange will not initiate an AIM Auction at a stop price equal to or more aggressive than the price of an AON order resting on either side of the Book at or between the BBO at the time an Agency Order and Initiating Order is submitted to the Exchange. Thus, the only AON orders that could be resting on the Book at the final auction price (and thus excluded from potential execution against the Agency Order) are those that were submitted during the AIM Auction and do not execute upon entry.[29] The Exchange believes the possibility of this occurring is very small, and therefore it would be rare for there to be a resting AON order at the stop price or final auction price of an AIM Auction that could be satisfied by the remaining contracts of an Agency Order at that price. Therefore, the Exchange believes the proposed rule change will have a de minimis impact, if any, on the execution opportunities for AON orders on the Book.

The proposed rule change also provides that the System will exclude the size of any AON orders when determining the number of contracts the Initiating Order will execute against at each price level better than the stop price when the Initiating Member selects auto-match.[30] Due to the size contingency of an AON order, the System cannot determine whether there will be sufficient contracts remaining in the Agency Order to execute against any AON order at a price level until after execution of the applicable number of contracts against the Initiating Order and other contra-side interest. However, after those auto-match executions at that price level, the System will execute the Agency Order against any AON orders at that price level for which the size can be satisfied by the remaining contracts in the Agency Order.[31]

The proposed rule change moves the provision regarding customer-to-customer immediate crosses from current Interpretation and Policy .08 to proposed paragraph (f). Proposed paragraph (f) does not specify that the execution price must be in the applicable standard increment, as the minimum increment applicable to these crosses is covered by the provisions described above.[32] The proposed rule change also deletes the provision that states customer-to-customer immediate crosses are available in classes the Exchange designates as eligible for these crosses, as they are and will be available classes in which the Exchange has designated as eligible for AIM Auctions.

The proposed rule change deletes current Interpretation and Policy .09 regarding AIM retained order functionality. TPHs currently do not use this functionality, so the Exchange has determined to no longer offer it.

The proposed rule change moves from current Rule 6.74A, Interpretation and Policy .08 to proposed Rule 5.37, Interpretation and Policy .03 that states a TPH may not execute agency orders to increase its economic gain from trading against the order without first giving other trading interests on the Exchange an opportunity to either trade with the agency order or to trade at the execution price when the TPH was already bidding or offering on the book. The proposed rule change also moves current Rule 6.74A, Interpretations and Policies .01 and .02 to proposed Rule 5.37, Interpretations and Policies .01 and .02, respectively, with no substantive changes.

2. Statutory Basis

The Exchange believes the proposed rule change is consistent with the Securities Exchange Act of 1934 (the ''Act'') and the rules and regulations thereunder applicable to the Exchange and, in particular, the requirements of Section 6(b) of the Act.[33] Specifically, the Exchange believes the proposed rule change is consistent with the Section 6(b)(5)[34] requirements that the rules of an exchange be designed to prevent fraudulent and manipulative acts and practices, to promote just and equitable principles of trade, to foster cooperation and coordination with persons engaged in regulating, clearing, settling, processing information with respect to, and facilitating transactions in securities, to remove impediments to and perfect the mechanism of a free and open market and a national market system, and, in general, to protect investors and the public interest. Additionally, the Exchange believes the proposed rule change is consistent with

(the ''final auction price''), of more than 50% of the initial Agency Order in the event there is interest from one other User or 40% of the initial Agency Order in the event there is interest from two or more other Users. This is consistent with current functionality, and merely clarified in the Rules. Additionally, this is consistent with current subparagraph (b)(3)(C) which states no participation entitlement applies to orders executed in an AIM Auction.

[27] Priority Orders at the same price will be allocated pursuant to Rule 5.32(a) (the base allocation algorithm applicable to the class).

[28] This is consistent with current functionality, as well as current allocation and priority principles, pursuant to which executions following an AIM Auction with respect to contra-side interest other than Priority Customer orders and the Initiating Order entitlement. *See* current Rule 6.45(a)(v) (which provides that AON orders (including Priority Customer AON orders) always have last priority).

[29] As noted above, AON orders resting in the Book at the conclusion of an AIM Auction at prices better than the final auction price may execute against the Agency Order if their size contingencies can be met. *See* proposed Rule 5.37(e)(2) (pursuant to which AON orders may execute at those prices after all other interest has traded).

[30] This is consistent with current functionality.

[31] After executions at price levels better than the final auction price, including against AON orders for which the size can be satisfied at those price levels, if there are remaining contracts from the Agency Order at the final auction price, those contracts will execute against contra-side interest as set forth in subparagraph (e)(1). This is consistent with current functionality.

[32] Users may not submit customer orders for immediate execution as Post Only, as that instruction is inconsistent with functionality to provide for immediate execution. As discussed above, the purpose of the Post Only order instruction is to prevent an order from executing upon entry. The purpose of a customer-to-customer immediate cross, as described above, is to execute immediately upon entry and not rest in the Book.

[33] 15 U.S.C. 78f(b).

[34] 15 U.S.C. 78f(b)(5).

the Section 6(b)(5)[35] requirement that the rules of an exchange not be designed to permit unfair discrimination between customers, issuers, brokers, or dealers.

The proposed rule change is generally intended to align certain system functionality currently offered by Cboe Options to the Exchange's System in order to provide a consistent technology offering for the Cboe Affiliated Exchanges. A consistent technology offering, in turn, will simplify the technology implementation, changes and maintenance by Users of the Exchange that are also participants on Cboe Affiliated Exchanges. This will provide Users with greater harmonization of price improvement auction mechanisms available among the Cboe Affiliated Exchanges.

The Exchange's AIM Auction as proposed will function in a substantially similar manner following the technology migration as it does today. The proposed rule change clarifies in the Rules that the Initiating Order may be comprised of multiple contra-party orders will benefit investors. As noted above, this is consistent with current functionality, and the proposed rule change merely adds this detail to the rule, which additional transparency will benefit investors. Permitting the Initiating Order to be comprised of multiple contra-party orders may increase the opportunity for customers to have orders participate in an AIM auction. As a result, this may increase opportunities for price improvement, because this will increase the liquidity available for the Initiating Order, which is consistent with the purpose of AIM Auctions. The Exchange believes that this is beneficial to participants because allowing multiple contra-parties should foster competition for filling the Initiating Order and thereby result in potentially better prices, as opposed to only allowing one contra-party and, thereby requiring that contra-party to do a larger size order which could result in a worse price for the trade.

The proposed rule change to prohibit Initiating TPHs from designating an Agency Order or Initiating Order as Post Only is appropriate, as the purpose of a Post Only order is to not execute upon entry and instead rest in the Book, while the purpose of an AIM Auction is to receive an execution following the Auction but prior to entering the Book.

The proposed rule change to require the stop price to be at least one minimum increment better than the BBO, unless the Agency Order is a Priority Customer order and the resting order is not a Priority Customer, in which case the stop price must be at or better than the BBO, will protect investors. It will protect Priority Customer orders on the same side of the Book, as the current rule does, except it does so by applying a check at the initiation of an AIM rather than at the conclusion of an AIM. By permitting a Priority Customer Agency Order to trade at the same price as a resting non-Priority Customer order, the proposed rule change also protects Priority Customer orders submitted into an AIM Auction. Additionally, application of this check at the initiation of an AIM Auction may result in the Agency Order executing at a better price, since the stop price must improve any same-side orders (with the exception of a Priority Customer Agency Order and a resting non-priority customer order described above), as under the current Rule, the Agency Order may execute at one minimum increment worse. The proposed rule change is consistent with general customer priority principles.

The Exchange believes the proposed rule change will protect investors by rejecting Sweep and AIM orders with pairs of orders for customer accounts, as this will ensure customers will receive better prices at least as good as the Initial NBBO and not oversubscribe the Agency Order. The Exchange believes there is minimal demand for use of Sweep and AIM orders for pairs of Priority Customer orders.

As noted above, the proposed rule change will allow AIM Auctions for 50 standard option contracts (or 500 mini-option contracts) or more to occur concurrently with other AIM Auctions. Although AIM Auctions for larger Agency Orders will be allowed to overlap, the Exchange does not believe that this raises any issues that are not addressed by the proposed rule change. For example, although overlapping, each AIM Auction will be started in a sequence and with a time that will determine its processing. Thus, even if there are two AIM Auctions that commence and conclude, at nearly the same time, each AIM Auction will have a distinct conclusion at which time the Auction will be allocated. In turn, when the first AIM Auction concludes, unrelated orders that then exist will be considered for participation in the Auction. If unrelated orders are fully executed in such AIM Auction, then there will be no unrelated orders for consideration when the subsequent Auction is processed (unless new unrelated order interest has arrived). If instead there is remaining unrelated order interest after the first AIM Auction has been allocated, then such unrelated order interest will be considered for allocation when the subsequent Auction is processed. As another example, each AIM response is required to specifically identify the Auction for which it is targeted and if not fully executed will be cancelled back at the conclusion of the Auction. Thus, AIM responses will be specifically considered only in the specified Auction.

The proposed rule change to allow multiple auctions to overlap for Agency Orders of 50 standard option contracts (or 500 mini-option contracts) or more is consistent with functionality already in place on other exchanges.[36] Different series are essentially different products—orders in different series cannot interact, just as orders in different classes cannot interact. Therefore, the Exchange believes concurrent AIM Auctions in different series is appropriate. As proposed, AIM Auctions will ensure that Agency Orders execute at prices that protect Priority Customer orders in the Book and that are not inferior to the BBO, even when there are concurrent AIM Auctions occurring. The proposed rule change sets forth how any Auctions in overlapping series will conclude if terminated due to the same event. The Rules do not currently prevent a COA in a complex strategy from occurring at the same time as an AIM in one of the components of the complex strategy. Therefore, the Exchange believes it is similarly reasonable to permit multiple AIM Auctions in the same series. The Exchange believes this new functionality may lead to an increase in Exchange volume and should allow the Exchange to better compete against other markets that permit overlapping price improvement auctions, while providing an opportunity for price improvement for Agency Orders and assuring that Priority Customers on the Book are protected.

The proposed rule changes regarding permissible designations on responses are reasonable and promote a fair and orderly market, because they are consistent with the general auction functionality. The proposed rule change that prohibits Users from designating an AIM Auction response with an MTP Modifier other than MTP Cancel Newest is consistent with the prohibition on the Agency Order being cancelled after it is submitted. Additionally, the proposed rule change that prohibits Users from designating a response as IOC or FOK, because it consistent with the purpose

[35] *Id.*

[36] *See, e.g.,* EDGX Rule 21.19(c)(1); *see also, e.g.,* Nasdaq ISE LLC (''ISE'') Rules 716(d) and 723, Interpretation and Policy .04; and Boston Options Exchange LLC (''BOX'') Rule 7270 and BOX IM–7150–3.

of an AIM response, which is to potentially execute against an Agency Order at the conclusion of an AIM Auction (and thus not immediately upon entry, as required by the times-in-force of IOC and FOK).

The proposed rule change to permit all Users to respond to AIM Auctions will benefit investors. Permitting all Users to submit responses to AIM Auctions, rather than only appointed Market-Makers and TPHs representing orders as agent at the top of the Book, may result in more Users having the opportunity to participate in executions at the conclusion of AIM Auctions. Additionally, it may increase liquidity in AIM Auctions, which may lead to more opportunities to price improvement. The Exchange believes the proposed rule change will remove impediments to and perfect the mechanism of a free and open market and a national market system, because other exchanges permit all market participants other than appointed market-makers to respond to similar price improvement auctions.[37]

The proposed events that will conclude an AIM Auction are reasonable and promote a fair and orderly market and national market system, because they will ensure that executions at the conclusion of an Auction occur at permissible prices (such as not outside the BBO and not at the same price as a Priority Customer order). The proposed rule change will also benefit investors by providing clarity regarding what will cause an AIM Auction to conclude. These events would create circumstances under which an AIM Auction would not have been permitted to start, or that would cause the auction price no longer be consistent with the permissible prices at which executions at the conclusion of an AIM Auction may occur. Thus the Exchange believes it is appropriate to conclude an AIM Auction if those circumstances occur. The Exchange will no longer conclude an AIM Auction early due to the receipt of an opposite side order. The Exchange believes this promotes just and equitable principles of trade, because these orders may have the opportunity to trade against the Agency Order following the conclusion of the Auction, which execution must still be at or better than the BBO. The Exchange believes this will protect investors, because it will provide more time for price improvement, and the unrelated order will have the opportunity to trade against the Agency Order in the same manner as all other contra-side interest.

The proposed rule change to provide Priority Orders with priority (after Priority Customers and any entitlement for the Initiating Order) at every price level will remove impediments to and perfect the mechanism of a free and open market and a national market system and will protect investors, because it encourages market participants to display their best bids and offers. Displayed interest may lead to enhanced liquidity and tighter markets, which benefits all investors.

The allocation of AON orders following an AIM auction will protect investors, because it is consistent with current functionality and adds transparency to the Rules. This allocation provides Priority Customers and other displayed interest with priority over non-displayed orders and is consistent with the proposed general priority of AON orders in the Exchange's Rules.[38] As noted above, the Exchange believes this encourages market participants to display their best bids and offers, which may lead to enhanced liquidity and tighter markets. While AON orders will not be eligible for execution at the final auction price (which may be the stop price), the Exchange believes it would be rare for there to be a resting AON order at the that price at the conclusion of an AIM Auction that could be satisfied by the remaining contracts of an Agency Order at that price. This is because the Exchange will not initiate an AIM Auction at a stop price that is at or through the price of an AON order resting on the Book at or between the BBO. Thus, the only potential AON orders resting on the Book at the final auction price at the conclusion of the AIM Auction are those that submitted during the AIM Auction. Given this likely uncommon situation, and because the proposed rule change will protect AON orders resting on the Book at the time the Exchange initiates an AIM Auction, the Exchange believes the proposed rule change will have a de minimis impact, if any, on the execution opportunities for AON orders. The Exchange notes there would be significant technical complexities associated with reprogramming priority within the System to provide AON orders with second to last priority in a specific (and likely uncommon situation), as would be required to permit AON orders to execute at the stop price, even if the Initiating TPH selects last priority. Similarly, due to the size contingency of an AON order, the System cannot determine whether there will be sufficient contracts remaining in the Agency Order to execute against any AON order at a price level until after execution of the applicable number of contracts against the Initiating Order and other contra-side interest. However, AON orders at each price level better than the final auction price for which the size can be satisfied by the remaining contracts in the Agency Order will execute.

The Exchange believes the proposed rule changes that add detail to the Rules, which are consistent with current functionality, will remove impediments to and perfect the mechanism of a free and open market and protect investors, as these changes provide transparency in the Rules regarding AIM Auctions. Additionally, the proposed rule change aligns rule language with corresponding provisions in the EDGX Options rule.

B. Self-Regulatory Organization's Statement on Burden on Competition

The Exchange does not believe that the proposed rule change will impose any burden on competition that is not necessary or appropriate in furtherance of the purposes of the Act. The Exchange does not believe the proposed rule change will impose any burden on intramarket competition, as the proposed changes to the Exchange's AIM Auction will apply to all orders submitted to an Auction in the same manner. AIM Auctions will continue to be voluntary for TPHs to use, and are available to all TPHs. Additionally, the ability to respond to AIM Auctions will now be available to all Users. The Exchange does not believe the proposed rule change will impose any burden on intermarket competition, because the proposed changes are substantially the same as another options exchange's rules.[39] The general framework and primary features of the Exchange's current AIM Auctions are not changing, and will continue to protect orders, including Priority Customer orders, resting in the Book.

C. Self-Regulatory Organization's Statement on Comments on the Proposed Rule Change Received From Members, Participants, or Others

The Exchange neither solicited nor received comments on the proposed rule change.

III. Date of Effectiveness of the Proposed Rule Change and Timing for Commission Action

The Exchange has filed the proposed rule change pursuant to Section

[37] *See, e.g.,* EDGX Options Rule 21.19.

[38] *See* current Rule 6.45(a)(v) (Rule 5.32 in the shell Rulebook).

[39] *See* EDGX Options Rule 21.19.

19(b)(3)(A) of the Act[40] and Rule 19b–4(f)(6)[41] thereunder. Because the foregoing proposed rule change does not: (i) Significantly affect the protection of investors or the public interest; (ii) impose any significant burden on competition; and (iii) become operative for 30 days from the date on which it was filed, or such shorter time as the Commission may designate, it has become effective pursuant to Section 19(b)(3)(A) of the Act[42] and Rule 19b–4(f)(6)[43] thereunder.

A proposed rule change filed under Rule 19b–4(f)(6)[44] normally does not become operative prior to 30 days after the date of the filing. However, pursuant to Rule 19b–4(f)(6)(iii),[45] the Commission may designate a shorter time if such action is consistent with protection of investors and the public interest. The Exchange has asked the Commission to waive the 30-day operative delay so that the proposed rule change may become operative prior to the proposed Exchange's system migration on October 7, 2019, in order to permit the Exchange to provide the AIM functionality to market participants on an uninterrupted basis. In support of its waiver request, the Exchange cites to similarities between its proposed rule and EDGX Options Rule 21.19. The Exchange further notes that the general framework of the Exchange's AIM Auction is not changing. The Commission believes that, as described above, the Exchange's proposal does not raise any new or novel issues. Therefore, the Commission believes that waving the 30-day operative delay is consistent with the protection of investors and the public interest. Accordingly, the Commission designates the proposed rule change to be operative on upon filing.[46]

At any time within 60 days of the filing of the proposed rule change, the Commission summarily may temporarily suspend such rule change if it appears to the Commission that such action is necessary or appropriate in the public interest, for the protection of investors, or otherwise in furtherance of the purposes of the Act. If the Commission takes such action, the Commission will institute proceedings to determine whether the proposed rule change should be approved or disapproved.

IV. Solicitation of Comments

Interested persons are invited to submit written data, views, and arguments concerning the foregoing, including whether the proposed rule change is consistent with the Act. Comments may be submitted by any of the following methods:

Electronic Comments

- Use the Commission's internet comment form (*http://www.sec.gov/rules/sro.shtml*); or
- Send an email to *rule-comments@sec.gov.* Please include File Number SR–CBOE–2019–045 on the subject line.

Paper Comments

- Send paper comments in triplicate to Secretary, Securities and Exchange Commission, 100 F Street NE, Washington, DC 20549–1090.

All submissions should refer to File Number SR–CBOE–2019–045. This file number should be included on the subject line if email is used. To help the Commission process and review your comments more efficiently, please use only one method. The Commission will post all comments on the Commission's internet website (*http://www.sec.gov/rules/sro.shtml*). Copies of the submission, all subsequent amendments, all written statements with respect to the proposed rule change that are filed with the Commission, and all written communications relating to the proposed rule change between the Commission and any person, other than those that may be withheld from the public in accordance with the provisions of 5 U.S.C. 552, will be available for website viewing and printing in the Commission's Public Reference Room, 100 F Street NE, Washington, DC 20549, on official business days between the hours of 10:00 a.m. and 3:00 p.m. Copies of the filing also will be available for inspection and copying at the principal office of the Exchange. All comments received will be posted without change. Persons submitting comments are cautioned that we do not redact or edit personal identifying information from comment submissions. You should submit only information that you wish to make available publicly. All submissions should refer to File Number SR–CBOE–2019–045 and should be submitted on or before October 21, 2019.

For the Commission, by the Division of Trading and Markets, pursuant to delegated authority.[47]

Jill M. Peterson,

Assistant Secretary.

[FR Doc. 2019–21098 Filed 9–27–19; 8:45 am]

BILLING CODE 8011–01–P

[40] 15 U.S.C. 78(b)(3)(A).

[41] 17 CFR 240.19b–4(f)(6).

[42] 15 U.S.C. 78s(b)(3)(A).

[43] 17 CFR 240.19b–4(f)(6). In addition, Rule 19b–4(f)(6)(iii) requires the Exchange to give the Commission written notice of the Exchange's intent to file the proposed rule change, along with a brief description and text of the proposed rule change, at least five business days prior to the date of filing of the proposed rule change, or such shorter time as designated by the Commission. The Exchange has satisfied this requirement.

[44] 17 CFR 240.19b–4(f)(6).

[45] 17 CFR 240.19b–4(f)(6).

[46] For purposes only of waiving the 30-day operative delay, the Commission also has considered the proposed rule's impact on efficiency, competition, and capital formation. *See* 15 U.S.C. 78c(f).

[47] 17 CFR 200.30–3(a)(12).

SECURITIES AND EXCHANGE COMMISSION

[Release No. 34–87094; File No. SR–Phlx–2019–35]

Self-Regulatory Organizations; Nasdaq PHLX LLC; Notice of Filing and Immediate Effectiveness of Proposed Rule Change To Amend the Exchange's Pricing Schedule, at Equity 7, Section 3

September 24, 2019.

Pursuant to Section 19(b)(1) of the Securities Exchange Act of 1934 (''Act''),[1] and Rule 19b–4 thereunder,[2] notice is hereby given that on September 12, 2019, Nasdaq PHLX LLC (''Phlx'' or ''Exchange'') filed with the Securities and Exchange Commission (''SEC'' or ''Commission'') the proposed rule change as described in Items I, II, and III, below, which Items have been prepared by the Exchange. The Commission is publishing this notice to solicit comments on the proposed rule change from interested persons.

I. Self-Regulatory Organization's Statement of the Terms of Substance of the Proposed Rule Change

The Exchange proposes to amend the Exchange's transaction fees at Equity 7, Section 3, as described further below.

The text of the proposed rule change is available on the Exchange's website at *http://nasdaqphlx.cchwallstreet.com/,* at the principal office of the Exchange, and at the Commission's Public Reference Room.

II. Self-Regulatory Organization's Statement of the Purpose of, and Statutory Basis for, the Proposed Rule Change

In its filing with the Commission, the Exchange included statements concerning the purpose of and basis for the proposed rule change and discussed any comments it received on the proposed rule change. The text of these statements may be examined at the places specified in Item IV below. The

[1] 15 U.S.C. 78s(b)(1).

[2] 17 CFR 240.19b–4.

Exchange has prepared summaries, set forth in sections A, B, and C below, of the most significant aspects of such statements.

A. Self-Regulatory Organization's Statement of the Purpose of, and Statutory Basis for, the Proposed Rule Change

1. Purpose

Presently, the Exchange has a pricing schedule, at Equity 7, Section 3, which sets forth several different fees that it charges for orders in securities priced at $1 or more per share that remove liquidity from the Exchange and several different credits that it providers for orders in such securities that add liquidity on the Exchange. The pricing schedule also provides a supplemental credit to member organizations that make significant contributions to improving the market during each month. The Exchange proposes to amend this pricing schedule to increase removal activity on the Exchange and to improve overall market quality.

Changes To Remove Fees

The Exchange proposes to largely restate its schedule of charges for member organizations that enter orders that execute on the Exchange. Presently, the Exchange charges a fee of $0.0029 per share executed in securities in all three Tapes entered by a member organization that accesses 0.065% or more of Consolidated Volume [3] during a month. For all other member organizations, the exchange presently charges execution fees of $0.0030 per share executed. The Exchange proposes to eliminate the $0.0029 fee and replace it with two tiers of fees. First, the Exchange proposes to charge a fee of $0.0024 per share executed in securities entered by a member organization that accesses 0.055% or more of Consolidated Volume during a month and that adds 0.025% or more of Consolidated Volume during a month. Second, the Exchange proposes to charge a fee of $0.0025 per share executed in securities entered by a member organization that accesses 0.01% or more of Consolidated Volume during the month and that adds 5,000 shares or more to the Exchange during a month. The Exchange proposes to maintain its existing $0.0030 per share executed fee for all other member organizations.

The purpose of these changes, which will reduce the overall fees that the Exchange charges to member organizations that remove liquidity from the Exchange, is to increase the extent of member organizations' removal activity on the Exchange. Moreover, by tying the availability of the two new, reduced removal fees to the extent of member organizations' liquidity adding activity on the Exchange, the Exchange intends to incentivize member organizations to maintain or increase their liquidity adding activity on the Exchange at the same time that they increase their removal activity, which in turn will help to improve overall market quality.

Changes To Add Credits

Additionally, the Exchange proposes to largely restate its schedule of credits to member organizations that provide displayed liquidity to the Exchange. Presently, the Exchange provides the following credits for member organizations that provide displayed liquidity to the Exchange: (1) A $0.0030 per share executed credit for quotes/orders entered by member organizations that provide and access 0.20% or more of Consolidated Volume during a month; (2) a $0.0027 per share executed credit for quotes/orders entered by member organizations that provide and access 0.15% or more of Consolidated Volume during a month; (3) a $0.0027 per share executed credit for quotes/orders entered in securities listed on exchanges other than Nasdaq or the NYSE by member organizations that (i) provide a minimum of 1 million shares a day on average in securities listed on Exchanges other than Nasdaq or NYSE and (ii) double the daily average share volume provided in Securities Listed on Exchanges other than Nasdaq or NYSE during the month versus the member organization's daily average share volume provided in Securities Listed on Exchanges other than Nasdaq or NYSE in February 2017; [4] (4) a $0.0025 per share executed credit for quotes/orders entered by member organizations that provide and access 0.05% or more of Consolidated volume during a month; and (5) a $0.0023 per share executed credit for all other quotes/orders.

The Exchange proposes to replace those credits with the following: (1) A $0.0026 per share executed credit for quotes/orders entered by member organizations that provide 0.15% or more of total Consolidated Volume during a month; and (2) a $0.0024 per share executed credit for quotes/orders entered by member organizations that provide 0.07% or more of total Consolidated Volume during a month. Additionally, the Exchange will continue to provide a $0.0023 per share executed credit for all other quotes/orders.

The Exchange proposes these changes to its schedule of transaction credits to offset its costs of reducing its transaction fees.

Changes to QMM Program

Earlier this year, the Exchange established a Qualified Market Maker (''QMM'') Program and related credits to incentivize member organizations to make significant contributions to market quality by providing liquidity at the national best bid and offer (''NBBO'') in a large number of securities for a significant portion of the day.[5] The program is designed to attract liquidity both from traditional market makers and from other firms that are willing to commit capital to support liquidity at the NBBO. Under existing Equity 7, Section 3, a member organization that qualifies as a QMM—*i.e.,* because it quotes at the NBBO at least 10 percent of the time during regular market hours in an average of at least 750 securities per day during a month—is entitled to receive a supplemental credit of $0.0002 per share executed for executions of displayed orders in securities in Tape A priced at $1 or more per share that provide liquidity on the Exchange.

The Exchange now proposes to amend the QMM Program in several respects. First, the Exchange proposes to adjust downward the average number of securities for which a member organization must quote at the NBBO during a month to qualify as a QMM as well as the amount of the credit that the Exchange will pay to a member organization that qualifies as a QMM. Whereas presently, a member organization must quote at the NBBO at least 10 percent of the time for an average of at least 750 securities per day to qualify as a QMM, the Exchange proposes to reduce this number to 500 securities per day. Under the proposal,

[3] As used in Equity 7, Section 3, the term ''Consolidated Volume'' means the total consolidated volume reported to all consolidated transaction reporting plans by all exchanges and trade reporting facilities during a month in equity securities, excluding executed orders with a size of less than one round lot. For purposes of calculating Consolidated Volume and the extent of a member's trading activity, the date of the annual reconstitution of the Russell Investments Indexes are excluded from both total Consolidated Volume and the member's trading activity.

[4] If a member had no activity in February 2017 in Securities Listed on Exchanges other than Nasdaq or NYSE or became a member after February 2017, its February 2017 daily average share volume in Securities Listed on Exchanges other than Nasdaq or NYSE is zero for purposes of determining that member's eligibility for the credit in subsequent months.

[5] *See* Securities Exchange Act Release No. 34–85862 (May 15, 2019), 84 FR 23112 (May 21, 2019) (SR–Phlx–2019–19).

however, a member organization that meets this adjusted criteria will be entitled to a supplemental credit of $0.0001 per share executed with respect to all of its displayed orders in all securities priced at $1 or more that provide liquidity, rather than $0.0002 per share executed with respect to all of its displayed orders only in securities in Tape A that are priced at $1 or more that provide liquidity.

Additionally, the Exchange proposes to establish a new second tier QMM Program credit for QMMs that quote at the NBBO for the requisite time for a larger average number of securities. Specifically, the Exchange proposes to provide a credit of $0.0002 per share executed with respect to all displayed orders of a QMM in securities priced at $1 or more per share that provide liquidity, provided that the QMM quotes the NBBO at least 10 percent of the time during Market Hours in an average of at least 650 securities per day during a month. To the extent that a QMM qualifies for this new credit, it will apply in lieu of the $0.0001 QMM credit described above.

The Exchange intends for its proposed amendments to its QMM Program to broaden and fortify participation in the Program. The Exchange intends to broaden participation in the Program by lowering the qualifying criteria for QMMs so that member organizations will be able to qualify that either cannot do so now or simply do not wish to quote at the NBBO at least 10 percent of the time for an average of at least 750 securities per day. The proposal intends to fortify existing participation in the Program by easing the burden on existing QMMs to maintain their qualifications as such. That is, member organizations that quote at the NBBO at least 10 percent of the time in as few as an average of 500 securities per day during a month will be able to earn a $0.0001 per share executed supplemental credit, whereas now, member organizations that engage in the same level of activity would earn no supplemental credit at all. Meanwhile, the $0.0002 per share executed supplemental credit would be available to member organizations that quote at the NBBO in only an average of 650 securities per day during a month, whereas now, such a credit is available only when member organizations quote at the NBBO for an average of at least 750 securities per day during a month.

2. Statutory Basis

The Exchange believes that its proposal is consistent with Section 6(b) of the Act,[6] in general, and furthers the objectives of Sections 6(b)(4) and 6(b)(5) of the Act,[7] in particular, in that it provides for the equitable allocation of reasonable dues, fees and other charges among members and issuers and other persons using any facility, and is not designed to permit unfair discrimination between customers, issuers, brokers, or dealers.

The Proposal is Reasonable

The Exchange's proposed change to its schedule of credits and charges is reasonable in several respects. As a threshold matter, the Exchange is subject to significant competitive forces in the market for equity securities transaction services that constrain its pricing determinations in that market. The fact that this market is competitive has long been recognized by the courts. In *NetCoalition* v. *Securities and Exchange Commission,* the D.C. Circuit stated as follows: ''[n]o one disputes that competition for order flow is 'fierce.' . . . As the SEC explained, '[i]n the U.S. national market system, buyers and sellers of securities, and the broker-dealers that act as their order-routing agents, have a wide range of choices of where to route orders for execution'; [and] 'no exchange can afford to take its market share percentages for granted' because 'no exchange possesses a monopoly, regulatory or otherwise, in the execution of order flow from broker dealers'. . . .''[8]

The Commission and the courts have repeatedly expressed their preference for competition over regulatory intervention in determining prices, products, and services in the securities markets. In Regulation NMS, while adopting a series of steps to improve the current market model, the Commission highlighted the importance of market forces in determining prices and SRO revenues and, also, recognized that current regulation of the market system ''has been remarkably successful in promoting market competition in its broader forms that are most important to investors and listed companies.''[9]

Numerous indicia demonstrate the competitive nature of this market. For example, clear substitutes to the Exchange exist in the market for equity security transaction services. The Exchange is only one of several equity venues to which market participants may direct their order flow. Competing equity exchanges offer similar tiered pricing structures to that of the Exchange, including schedules of rebates and fees that apply based upon members achieving certain volume thresholds.[10]

Within this environment, market participants can freely and often do shift their order flow among the Exchange and competing venues in response to changes in their respective pricing schedules.[11] Within the foregoing context, the proposal represents a reasonable attempt by the Exchange to increase its market share relative to its competitors.

Generally, the Exchange's proposed schedule of credits and charges in Equity 7, Section 3 provide increased overall incentives to member organizations to increase their liquidity removal activity on the Exchange, and to do so broadly in orders in securities in all Tapes. An increase in overall liquidity removal activity on the Exchange will, in turn, improve the quality of the Exchange's equity market and increase its attractiveness to existing and prospective participants. The proposed new fees are consistent with the current design of Equity 7, Section 3 because they provide incrementally lower fees in return for increased removal and provision of liquidity on the Exchange. Moreover, the proposed credits will be comparable to, if not favorable to, those that its competitors provide.[12]

The proposed changes to the Exchange's QMM Program is also a reasonable attempt to improve market quality by broadening its QMM Program. By lowering the thresholds for member organizations to qualify as QMMs and to receive supplemental credits for quoting at the NBBO for a significant percentage of the trading day in a significant percentage of securities, the Exchange will encourage new member organizations to become QMMs and help ensure that existing QMMs continue to qualify as such. The Exchange also proposes to broaden the utility of the QMM credits it provides to QMMs by making the credits applicable

[6] 15 U.S.C. 78f(b).

[7] 15 U.S.C. 78f(b)(4) and (5).

[8] *NetCoalition* v. *SEC,* 615 F.3d 525, 539 (D.C. Cir. 2010) (quoting Securities Exchange Act Release No. 59039 (December 2, 2008), 73 FR 74770, 74782–83 (December 9, 2008) (SR–NYSEArca–2006–21)).

[9] Securities Exchange Act Release No. 51808 (June 9, 2005), 70 FR 37496, 37499 (June 29, 2005) (''Regulation NMS Adopting Release'').

[10] *See* Cboe EDGX U.S. Equities Exchange Fee Schedule, available at *https://markets.cboe.com/us/equities/membership/fee_schedule/edgx/.*

[11] The Exchange perceives no regulatory, structural, or cost impediments to market participants shifting order flow away from it. In particular, the Exchange notes that such shifts in liquidity and market share occur within the context of market participants' existing duties of Best Execution and obligations under the Order Protection Rule under Regulation NMS.

[12] *See* n. 10, *supra.*

to displayed orders in all Tapes, rather than only to those in Tape A.

The Proposals Are an Equitable Allocation of Credits and Charges

The Exchange believes its proposals will allocate its proposed credits and charges fairly among its market participants. The proposal will provide a member organization with an opportunity to pay lower fees for removing liquidity from the Exchange than it does now. It is equitable for the Exchange to lower its fees to participants whose orders remove liquidity from the Exchange as a means of incentivizing increased liquidity removal activity and to do so broadly in orders in securities in all Tapes. An increase in overall liquidity removal activity on the Exchange will improve the quality of the Exchange's equity market and increase its attractiveness to existing and prospective participants.

Meanwhile, the Exchange believes that it is reasonable to offset the costs of charging lower fees for liquidity removal by lowering its credits for liquidity provision to the Exchange. Although the proposed credits will be lower, in many cases, than the existing credits, and may be harder to achieve, the Exchange believes that the proposed credits will continue to be comparable to liquidity adding rebates provided by its competitors.[13] That said, the Exchange again notes that those participants that do not wish to receive lower credits are free to shift their order flow to competing venues that offer them higher credits.

Finally, the Exchange believes its proposal to adjust the qualification criteria and supplemental credits applicable to its QMM program is an equitable allocation of proposed credits because the modified qualification criteria will continue to require member organizations to quote significantly at the NBBO for a large number of securities and will continue to contribute to market quality in a meaningful way. In fact, by lowering the thresholds for member organizations to qualify as QMMs and to receive supplemental credits, the Exchange will encourage new member organizations to become QMMs and help ensure that existing QMMs continue to qualify as such, which will further improve market quality.

The Proposal Is Not Unfairly Discriminatory

The Exchange believes that the proposals are not unfairly discriminatory. As an initial matter, the Exchange believes that nothing about its volume-based tiered pricing model is inherently unfair; instead, it is a rational pricing model that is well-established and ubiquitous in today's economy among firms in various industries—from co-branded credit cards to grocery stores to cellular telephone data plans—that use it to reward the loyalty of their best customers that provide high levels of business activity and incent other customers to increase the extent of their business activity. It is also a pricing model that the Exchange and its competitors have long employed with the assent of the Commission. It is fair because it incentivizes customer activity that increases liquidity, enhances price discovery, and improves the overall quality of the equity markets.

The Exchange intends for the proposal to improve market quality for all members on the Exchange and by extension attract more liquidity to the market, improving market wide quality and price discovery. Although net removers of liquidity will benefit most from the proposed lower charges, this result is fair insofar as increased liquidity removal activity will help to improve market quality and the attractiveness of the Exchange's equity market to all existing and prospective participants.

The Exchange's proposal to modify the QMM program is not unfairly discriminatory because any member organization may quote at the NBBO at the level required by the modified qualification criteria of the QMM Program and, in fact, the modified criteria will render qualification as a QMM easier for member organizations to achieve.

B. Self-Regulatory Organization's Statement on Burden on Competition

The Exchange does not believe that the proposed rule change will impose any burden on competition not necessary or appropriate in furtherance of the purposes of the Act.

Intramarket Competition

The Exchange does not believe that its proposals will place any category of Exchange participant at a competitive disadvantage. As noted above, all members of the Exchange will benefit from an increase in the removal of liquidity by those that choose to meet the tier qualification criteria. Members may grow their businesses so that they have the capacity to pay lower removal fees. Moreover, members are free to trade on other venues to the extent they believe that the fees assessed and credits provided are not attractive. As one can observe by looking at any market share chart, price competition between exchanges is fierce, with liquidity and market share moving freely between exchanges in reaction to fee and credit changes. The Exchange notes that the tier structure is consistent with broker-dealer fee practices as well as the other industries, as described above.

Moreover, the Exchange's proposal to modify its QMM program will not burden intramarket competition because the QMM Program, as modified, will continue to provide all member organizations with an opportunity to obtain supplemental credits for transactions if they improve the market by providing significant quoting at the NBBO in a large number of securities which the Exchange believes will improve market quality. By relaxing the qualification criteria, the modifications will make the Program more accessible to new member organizations and easier for existing QMMs to remain in the Program.

Intermarket Competition

Addressing whether the proposed fee could impose a burden on competition on other SROs that is not necessary or appropriate, the Exchange believes that its proposed modifications to its schedule of credits and charges will not impose a burden on competition because the Exchange's execution services are completely voluntary and subject to extensive competition both from the other 12 live exchanges and from off-exchange venues, which include 32 alternative trading systems. The Exchange notes that it operates in a highly competitive market in which market participants can readily favor competing venues if they deem fee levels at a particular venue to be excessive, or rebate opportunities available at other venues to be more favorable. In such an environment, the Exchange must continually adjust its fees to remain competitive with other exchanges and with alternative trading systems that have been exempted from compliance with the statutory standards applicable to exchanges. Because competitors are free to modify their own fees in response, and because market participants may readily adjust their order routing practices, the Exchange believes that the degree to which fee changes in this market may impose any burden on competition is extremely limited.

The proposed restated schedule of credits and charges and the proposed modifications to the QMM Program are reflective of this competition because, as a threshold issue, the Exchange is a relatively small market so its ability to burden intermarket competition is

[13] *See id.*

limited. In this regard, even the largest U.S. equities exchange by volume only has 17–18% market share, which in most markets could hardly be categorized as having enough market power to burden competition. Moreover, as noted above, price competition between exchanges is fierce, with liquidity and market share moving freely between exchanges in reaction to fee and credit changes. This is in addition to free flow of order flow to and among off-exchange venues which comprised more than 37% of industry volume for the month of July 2019.

In sum, the Exchange intends for the proposed fees and credits and modified QMM Program to increase member incentives to remove liquidity from the Exchange and to contribute to market quality, which is reflective of fierce competition for order flow noted above; however, if the proposed fees and credits are unattractive to market participants, it is likely that the Exchange will either fail to increase its market share or even lose market share as a result. Accordingly, the Exchange does not believe that the proposed new fees and credits will impair the ability of members or competing order execution venues to maintain their competitive standing in the financial markets.

C. Self-Regulatory Organization's Statement on Comments on the Proposed Rule Change Received From Members, Participants, or Others

No written comments were either solicited or received.

III. Date of Effectiveness of the Proposed Rule Change and Timing for Commission Action

The foregoing rule change has become effective pursuant to Section 19(b)(3)(A)(ii) of the Act.[14]

At any time within 60 days of the filing of the proposed rule change, the Commission summarily may temporarily suspend such rule change if it appears to the Commission that such action is: (i) Necessary or appropriate in the public interest; (ii) for the protection of investors; or (iii) otherwise in furtherance of the purposes of the Act. If the Commission takes such action, the Commission shall institute proceedings to determine whether the proposed rule should be approved or disapproved.

IV. Solicitation of Comments

Interested persons are invited to submit written data, views, and arguments concerning the foregoing, including whether the proposed rule change is consistent with the Act. Comments may be submitted by any of the following methods:

Electronic Comments

- Use the Commission's internet comment form (*http://www.sec.gov/rules/sro.shtml*); or
- Send an email to *rule-comments@sec.gov.* Please include File Number SR–Phlx–2019–35 on the subject line.

Paper Comments

- Send paper comments in triplicate to Secretary, Securities and Exchange Commission, 100 F Street NE, Washington, DC 20549–1090.

All submissions should refer to File Number SR–Phlx–2019–35. This file number should be included on the subject line if email is used. To help the Commission process and review your comments more efficiently, please use only one method. The Commission will post all comments on the Commission's internet website (*http://www.sec.gov/rules/sro.shtml*). Copies of the submission, all subsequent amendments, all written statements with respect to the proposed rule change that are filed with the Commission, and all written communications relating to the proposed rule change between the Commission and any person, other than those that may be withheld from the public in accordance with the provisions of 5 U.S.C. 552, will be available for website viewing and printing in the Commission's Public Reference Room, 100 F Street NE, Washington, DC 20549, on official business days between the hours of 10:00 a.m. and 3:00 p.m. Copies of the filing also will be available for inspection and copying at the principal office of the Exchange. All comments received will be posted without change. Persons submitting comments are cautioned that we do not redact or edit personal identifying information from comment submissions. You should submit only information that you wish to make available publicly. All submissions should refer to File Number SR–Phlx–2019–35 and should be submitted on or before October 21, 2019.

For the Commission, by the Division of Trading and Markets, pursuant to delegated authority.[15]

Jill M. Peterson,

Assistant Secretary.

[FR Doc. 2019–21093 Filed 9–27–19; 8:45 am]

BILLING CODE 8011–01–P

[14] 15 U.S.C. 78s(b)(3)(A)(ii).

[15] 17 CFR 200.30–3(a)(12).

SECURITIES AND EXCHANGE COMMISSION

Proposed Collection; Comment Request

Upon Written Request, Copies Available From: Securities and Exchange Commission, Office of FOIA Services, 100 F Street NE, Washington, DC 20549–2736

Extension:

Rule 17Ab2–2, SEC File No. 270–617, OMB Control No. 3235–0728

Notice is hereby given that pursuant to the Paperwork Reduction Act of 1995 (''PRA'') (44 U.S.C. 3501 *et seq.*), the Securities and Exchange Commission (''Commission'') is soliciting comments on the existing collection of information provided for in Rule 17Ab2–2 (17 CFR 240.17Ab2–2) under the Securities Exchange Act of 1934 (15 U.S.C. 78a *et seq.*). The Commission plans to submit this existing collection of information to the Office of Management and Budget (''OMB'') for extension and approval.

Exchange Act Rule 17Ab2–2 establishes procedures for the Commission to make a determination, either of its own initiative or upon application by any clearing agency or member of a clearing agency, whether a covered clearing agency is systemically important in multiple jurisdictions and procedures to determine, if the Commission deems appropriate, whether any of the activities of a clearing agency providing central counterparty services, in addition to clearing agencies registered with the Commission for the purpose of clearing security-based swaps, have a more complex risk profile. In addition, Exchange Act Rule 17Ab2–2 provides a procedure for the Commission to determine whether to rescind any such determinations previously made by the Commission.

Because determinations made by the Commission pursuant to Exchange Act Rule 17Ab2–2 may be made upon the request of a clearing agency, respondent clearing agencies have the burden of preparing such requests for submission to the Commission.

Commission staff estimates that Rule 17Ab2–2 imposes a PRA burden on registered clearing agencies that seek a determination from the Commission regarding the covered clearing agency's status as systemically important in multiple jurisdictions. Commission staff estimates that two registered clearing agencies or their members on their behalf will apply for a Commission determination, or may be subject to a Commission-initiated determination, regarding whether a registered clearing

agency is involved in activities with a more complex risk profile or whether a covered clearing agency is systemically important in multiple jurisdictions.

Commission staff estimates that each respondent clearing agency incurs a one-time burden of 10 hours and a one-time cost of $2,000 to draft and review a determination request submitted to the Commission, for a total of 20 hours and $4,000 for all respondents. The total annualized burden and cost for all respondents are 6.66 hours and $1,333.33.

Written comments are invited on: (a) Whether the proposed collection of information is necessary for the proper performance of the functions of the Commission, including whether the information will have practical utility; (b) the accuracy of the Commission staff's estimates of the burden of the proposed collection of information; (c) the ways to enhance the quality, utility, and clarity of the information collected; and (d) ways to minimize the burden of the collection of information on respondents, including through the use of automated collection techniques or other forms of information technology. Consideration will be given to comments and suggestions submitted in writing within 60 days of this publication.

Any agency may not conduct or sponsor, and a person is not required to respond to, a collection of information under the PRA unless it displays a valid OMB control number.

Please direct your written comments to: Charles Riddle, Acting Director/Chief Information Officer, Securities and Exchange Commission, c/o Candace Kenner, 100 F Street NE, Washington, DC 20549, or send an email to: *PRA_Mailbox@sec.gov.*

Dated: September 24, 2019.

Jill M. Peterson,

Assistant Secretary.

[FR Doc. 2019–21082 Filed 9–27–19; 8:45 am]

BILLING CODE 8011–01–P

SECURITIES AND EXCHANGE COMMISSION

[Release No. 34–87094; File No. SR–Phlx–2019–35]

Self-Regulatory Organizations; Nasdaq PHLX LLC; Notice of Filing and Immediate Effectiveness of Proposed Rule Change To Amend the Exchange's Pricing Schedule, at Equity 7, Section 3

September 24, 2019.

Pursuant to Section 19(b)(1) of the Securities Exchange Act of 1934 (''Act''),[1] and Rule 19b–4 thereunder,[2] notice is hereby given that on September 12, 2019, Nasdaq PHLX LLC (''Phlx'' or ''Exchange'') filed with the Securities and Exchange Commission (''SEC'' or ''Commission'') the proposed rule change as described in Items I, II, and III, below, which Items have been prepared by the Exchange. The Commission is publishing this notice to solicit comments on the proposed rule change from interested persons.

I. Self-Regulatory Organization's Statement of the Terms of Substance of the Proposed Rule Change

The Exchange proposes to amend the Exchange's transaction fees at Equity 7, Section 3, as described further below.

The text of the proposed rule change is available on the Exchange's website at *http://nasdaqphlx.cchwallstreet.com/,* at the principal office of the Exchange, and at the Commission's Public Reference Room.

II. Self-Regulatory Organization's Statement of the Purpose of, and Statutory Basis for, the Proposed Rule Change

In its filing with the Commission, the Exchange included statements concerning the purpose of and basis for the proposed rule change and discussed any comments it received on the proposed rule change. The text of these statements may be examined at the places specified in Item IV below. The Exchange has prepared summaries, set forth in sections A, B, and C below, of the most significant aspects of such statements.

A. Self-Regulatory Organization's Statement of the Purpose of, and Statutory Basis for, the Proposed Rule Change

1. Purpose

Presently, the Exchange has a pricing schedule, at Equity 7, Section 3, which sets forth several different fees that it charges for orders in securities priced at $1 or more per share that remove liquidity from the Exchange and several different credits that it providers for orders in such securities that add liquidity on the Exchange. The pricing schedule also provides a supplemental credit to member organizations that make significant contributions to improving the market during each month. The Exchange proposes to amend this pricing schedule to increase removal activity on the Exchange and to improve overall market quality.

Changes To Remove Fees

The Exchange proposes to largely restate its schedule of charges for member organizations that enter orders that execute on the Exchange. Presently, the Exchange charges a fee of $0.0029 per share executed in securities in all three Tapes entered by a member organization that accesses 0.065% or more of Consolidated Volume[3] during a month. For all other member organizations, the exchange presently charges execution fees of $0.0030 per share executed. The Exchange proposes to eliminate the $0.0029 fee and replace it with two tiers of fees. First, the Exchange proposes to charge a fee of $0.0024 per share executed in securities entered by a member organization that accesses 0.055% or more of Consolidated Volume during a month and that adds 0.025% or more of Consolidated Volume during a month. Second, the Exchange proposes to charge a fee of $0.0025 per share executed in securities entered by a member organization that accesses 0.01% or more of Consolidated Volume during the month and that adds 5,000 shares or more to the Exchange during a month. The Exchange proposes to maintain its existing $0.0030 per share executed fee for all other member organizations.

The purpose of these changes, which will reduce the overall fees that the Exchange charges to member organizations that remove liquidity from the Exchange, is to increase the extent of member organizations' removal activity on the Exchange. Moreover, by tying the availability of the two new, reduced removal fees to the extent of member organizations' liquidity adding activity on the Exchange, the Exchange intends to incentivize member organizations to maintain or increase their liquidity adding activity on the Exchange at the same time that they increase their removal activity, which in turn will help to improve overall market quality.

Changes To Add Credits

Additionally, the Exchange proposes to largely restate its schedule of credits to member organizations that provide displayed liquidity to the Exchange.

[1] 15 U.S.C. 78s(b)(1).

[2] 17 CFR 240.19b–4.

[3] As used in Equity 7, Section 3, the term ''Consolidated Volume'' means the total consolidated volume reported to all consolidated transaction reporting plans by all exchanges and trade reporting facilities during a month in equity securities, excluding executed orders with a size of less than one round lot. For purposes of calculating Consolidated Volume and the extent of a member's trading activity, the date of the annual reconstitution of the Russell Investments Indexes are excluded from both total Consolidated Volume and the member's trading activity.

Presently, the Exchange provides the following credits for member organizations that provide displayed liquidity to the Exchange: (1) A $0.0030 per share executed credit for quotes/orders entered by member organizations that provide and access 0.20% or more of Consolidated Volume during a month; (2) a $0.0027 per share executed credit for quotes/orders entered by member organizations that provide and access 0.15% or more of Consolidated Volume during a month; (3) a $0.0027 per share executed credit for quotes/orders entered in securities listed on exchanges other than Nasdaq or the NYSE by member organizations that (i) provide a minimum of 1 million shares a day on average in securities listed on Exchanges other than Nasdaq or NYSE and (ii) double the daily average share volume provided in Securities Listed on Exchanges other than Nasdaq or NYSE during the month versus the member organization's daily average share volume provided in Securities Listed on Exchanges other than Nasdaq or NYSE in February 2017;[4] (4) a $0.0025 per share executed credit for quotes/orders entered by member organizations that provide and access 0.05% or more of Consolidated volume during a month; and (5) a $0.0023 per share executed credit for all other quotes/orders.

The Exchange proposes to replace those credits with the following: (1) A $0.0026 per share executed credit for quotes/orders entered by member organizations that provide 0.15% or more of total Consolidated Volume during a month; and (2) a $0.0024 per share executed credit for quotes/orders entered by member organizations that provide 0.07% or more of total Consolidated Volume during a month. Additionally, the Exchange will continue to provide a $0.0023 per share executed credit for all other quotes/orders.

The Exchange proposes these changes to its schedule of transaction credits to offset its costs of reducing its transaction fees.

Changes to QMM Program

Earlier this year, the Exchange established a Qualified Market Maker (''QMM'') Program and related credits to incentivize member organizations to make significant contributions to market quality by providing liquidity at the national best bid and offer (''NBBO'') in a large number of securities for a significant portion of the day.[5] The program is designed to attract liquidity both from traditional market makers and from other firms that are willing to commit capital to support liquidity at the NBBO. Under existing Equity 7, Section 3, a member organization that qualifies as a QMM—*i.e.,* because it quotes at the NBBO at least 10 percent of the time during regular market hours in an average of at least 750 securities per day during a month—is entitled to receive a supplemental credit of $0.0002 per share executed for executions of displayed orders in securities in Tape A priced at $1 or more per share that provide liquidity on the Exchange.

The Exchange now proposes to amend the QMM Program in several respects. First, the Exchange proposes to adjust downward the average number of securities for which a member organization must quote at the NBBO during a month to qualify as a QMM as well as the amount of the credit that the Exchange will pay to a member organization that qualifies as a QMM. Whereas presently, a member organization must quote at the NBBO at least 10 percent of the time for an average of at least 750 securities per day to qualify as a QMM, the Exchange proposes to reduce this number to 500 securities per day. Under the proposal, however, a member organization that meets this adjusted criteria will be entitled to a supplemental credit of $0.0001 per share executed with respect to all of its displayed orders in all securities priced at $1 or more that provide liquidity, rather than $0.0002 per share executed with respect to all of its displayed orders only in securities in Tape A that are priced at $1 or more that provide liquidity.

Additionally, the Exchange proposes to establish a new second tier QMM Program credit for QMMs that quote at the NBBO for the requisite time for a larger average number of securities. Specifically, the Exchange proposes to provide a credit of $0.0002 per share executed with respect to all displayed orders of a QMM in securities priced at $1 or more per share that provide liquidity, provided that the QMM quotes the NBBO at least 10 percent of the time during Market Hours in an average of at least 650 securities per day during a month. To the extent that a QMM qualifies for this new credit, it will apply in lieu of the $0.0001 QMM credit described above.

The Exchange intends for its proposed amendments to its QMM Program to broaden and fortify participation in the Program. The Exchange intends to broaden participation in the Program by lowering the qualifying criteria for QMMs so that member organizations will be able to qualify that either cannot do so now or simply do not wish to quote at the NBBO at least 10 percent of the time for an average of at least 750 securities per day. The proposal intends to fortify existing participation in the Program by easing the burden on existing QMMs to maintain their qualifications as such. That is, member organizations that quote at the NBBO at least 10 percent of the time in as few as an average of 500 securities per day during a month will be able to earn a $0.0001 per share executed supplemental credit, whereas now, member organizations that engage in the same level of activity would earn no supplemental credit at all. Meanwhile, the $0.0002 per share executed supplemental credit would be available to member organizations that quote at the NBBO in only an average of 650 securities per day during a month, whereas now, such a credit is available only when member organizations quote at the NBBO for an average of at least 750 securities per day during a month.

2. Statutory Basis

The Exchange believes that its proposal is consistent with Section 6(b) of the Act,[6] in general, and furthers the objectives of Sections 6(b)(4) and 6(b)(5) of the Act,[7] in particular, in that it provides for the equitable allocation of reasonable dues, fees and other charges among members and issuers and other persons using any facility, and is not designed to permit unfair discrimination between customers, issuers, brokers, or dealers.

The Proposal is Reasonable

The Exchange's proposed change to its schedule of credits and charges is reasonable in several respects. As a threshold matter, the Exchange is subject to significant competitive forces in the market for equity securities transaction services that constrain its pricing determinations in that market. The fact that this market is competitive has long been recognized by the courts. In *NetCoalition* v. *Securities and Exchange Commission,* the D.C. Circuit stated as follows: ''[n]o one disputes that competition for order flow is 'fierce.' . . . As the SEC explained, '[i]n the U.S. national market system, buyers

[4] If a member had no activity in February 2017 in Securities Listed on Exchanges other than Nasdaq or NYSE or became a member after February 2017, its February 2017 daily average share volume in Securities Listed on Exchanges other than Nasdaq or NYSE is zero for purposes of determining that member's eligibility for the credit in subsequent months.

[5] *See* Securities Exchange Act Release No. 34–85862 (May 15, 2019), 84 FR 23112 (May 21, 2019) (SR–Phlx–2019–19).

[6] 15 U.S.C. 78f(b).

[7] 15 U.S.C. 78f(b)(4) and (5).

and sellers of securities, and the broker-dealers that act as their order-routing agents, have a wide range of choices of where to route orders for execution'; [and] 'no exchange can afford to take its market share percentages for granted' because 'no exchange possesses a monopoly, regulatory or otherwise, in the execution of order flow from broker dealers'. . . .'' [8]

The Commission and the courts have repeatedly expressed their preference for competition over regulatory intervention in determining prices, products, and services in the securities markets. In Regulation NMS, while adopting a series of steps to improve the current market model, the Commission highlighted the importance of market forces in determining prices and SRO revenues and, also, recognized that current regulation of the market system ''has been remarkably successful in promoting market competition in its broader forms that are most important to investors and listed companies.'' [9]

Numerous indicia demonstrate the competitive nature of this market. For example, clear substitutes to the Exchange exist in the market for equity security transaction services. The Exchange is only one of several equity venues to which market participants may direct their order flow. Competing equity exchanges offer similar tiered pricing structures to that of the Exchange, including schedules of rebates and fees that apply based upon members achieving certain volume thresholds.[10]

Within this environment, market participants can freely and often do shift their order flow among the Exchange and competing venues in response to changes in their respective pricing schedules.[11] Within the foregoing context, the proposal represents a reasonable attempt by the Exchange to increase its market share relative to its competitors.

Generally, the Exchange's proposed schedule of credits and charges in Equity 7, Section 3 provide increased overall incentives to member organizations to increase their liquidity removal activity on the Exchange, and to do so broadly in orders in securities in all Tapes. An increase in overall liquidity removal activity on the Exchange will, in turn, improve the quality of the Exchange's equity market and increase its attractiveness to existing and prospective participants. The proposed new fees are consistent with the current design of Equity 7, Section 3 because they provide incrementally lower fees in return for increased removal and provision of liquidity on the Exchange. Moreover, the proposed credits will be comparable to, if not favorable to, those that its competitors provide.[12]

The proposed changes to the Exchange's QMM Program is also a reasonable attempt to improve market quality by broadening its QMM Program. By lowering the thresholds for member organizations to qualify as QMMs and to receive supplemental credits for quoting at the NBBO for a significant percentage of the trading day in a significant percentage of securities, the Exchange will encourage new member organizations to become QMMs and help ensure that existing QMMs continue to qualify as such. The Exchange also proposes to broaden the utility of the QMM credits it provides to QMMs by making the credits applicable to displayed orders in all Tapes, rather than only to those in Tape A.

The Proposals Are an Equitable Allocation of Credits and Charges

The Exchange believes its proposals will allocate its proposed credits and charges fairly among its market participants. The proposal will provide a member organization with an opportunity to pay lower fees for removing liquidity from the Exchange than it does now. It is equitable for the Exchange to lower its fees to participants whose orders remove liquidity from the Exchange as a means of incentivizing increased liquidity removal activity and to do so broadly in orders in securities in all Tapes. An increase in overall liquidity removal activity on the Exchange will improve the quality of the Exchange's equity market and increase its attractiveness to existing and prospective participants.

Meanwhile, the Exchange believes that it is reasonable to offset the costs of charging lower fees for liquidity removal by lowering its credits for liquidity provision to the Exchange. Although the proposed credits will be lower, in many cases, than the existing credits, and may be harder to achieve, the Exchange believes that the proposed credits will continue to be comparable to liquidity adding rebates provided by its competitors.[13] That said, the Exchange again notes that those participants that do not wish to receive lower credits are free to shift their order flow to competing venues that offer them higher credits.

Finally, the Exchange believes its proposal to adjust the qualification criteria and supplemental credits applicable to its QMM program is an equitable allocation of proposed credits because the modified qualification criteria will continue to require member organizations to quote significantly at the NBBO for a large number of securities and will continue to contribute to market quality in a meaningful way. In fact, by lowering the thresholds for member organizations to qualify as QMMs and to receive supplemental credits, the Exchange will encourage new member organizations to become QMMs and help ensure that existing QMMs continue to qualify as such, which will further improve market quality.

The Proposal Is Not Unfairly Discriminatory

The Exchange believes that the proposals are not unfairly discriminatory. As an initial matter, the Exchange believes that nothing about its volume-based tiered pricing model is inherently unfair; instead, it is a rational pricing model that is well-established and ubiquitous in today's economy among firms in various industries—from co-branded credit cards to grocery stores to cellular telephone data plans—that use it to reward the loyalty of their best customers that provide high levels of business activity and incent other customers to increase the extent of their business activity. It is also a pricing model that the Exchange and its competitors have long employed with the assent of the Commission. It is fair because it incentivizes customer activity that increases liquidity, enhances price discovery, and improves the overall quality of the equity markets.

The Exchange intends for the proposal to improve market quality for all members on the Exchange and by extension attract more liquidity to the market, improving market wide quality and price discovery. Although net removers of liquidity will benefit most from the proposed lower charges, this result is fair insofar as increased liquidity removal activity will help to improve market quality and the

[8] *NetCoalition* v. *SEC,* 615 F.3d 525, 539 (D.C. Cir. 2010) (quoting Securities Exchange Act Release No. 59039 (December 2, 2008), 73 FR 74770, 74782–83 (December 9, 2008) (SR–NYSEArca–2006–21)).

[9] Securities Exchange Act Release No. 51808 (June 9, 2005), 70 FR 37496, 37499 (June 29, 2005) (''Regulation NMS Adopting Release'').

[10] *See* Cboe EDGX U.S. Equities Exchange Fee Schedule, available at *https://markets.cboe.com/us/equities/membership/fee_schedule/edgx/.*

[11] The Exchange perceives no regulatory, structural, or cost impediments to market participants shifting order flow away from it. In particular, the Exchange notes that such shifts in liquidity and market share occur within the context of market participants' existing duties of Best Execution and obligations under the Order Protection Rule under Regulation NMS.

[12] *See* n. 10, *supra.*

[13] *See id.*

attractiveness of the Exchange's equity market to all existing and prospective participants.

The Exchange's proposal to modify the QMM program is not unfairly discriminatory because any member organization may quote at the NBBO at the level required by the modified qualification criteria of the QMM Program and, in fact, the modified criteria will render qualification as a QMM easier for member organizations to achieve.

B. Self-Regulatory Organization's Statement on Burden on Competition

The Exchange does not believe that the proposed rule change will impose any burden on competition not necessary or appropriate in furtherance of the purposes of the Act.

Intramarket Competition

The Exchange does not believe that its proposals will place any category of Exchange participant at a competitive disadvantage. As noted above, all members of the Exchange will benefit from an increase in the removal of liquidity by those that choose to meet the tier qualification criteria. Members may grow their businesses so that they have the capacity to pay lower removal fees. Moreover, members are free to trade on other venues to the extent they believe that the fees assessed and credits provided are not attractive. As one can observe by looking at any market share chart, price competition between exchanges is fierce, with liquidity and market share moving freely between exchanges in reaction to fee and credit changes. The Exchange notes that the tier structure is consistent with broker-dealer fee practices as well as the other industries, as described above.

Moreover, the Exchange's proposal to modify its QMM program will not burden intramarket competition because the QMM Program, as modified, will continue to provide all member organizations with an opportunity to obtain supplemental credits for transactions if they improve the market by providing significant quoting at the NBBO in a large number of securities which the Exchange believes will improve market quality. By relaxing the qualification criteria, the modifications will make the Program more accessible to new member organizations and easier for existing QMMs to remain in the Program.

Intermarket Competition

Addressing whether the proposed fee could impose a burden on competition on other SROs that is not necessary or appropriate, the Exchange believes that its proposed modifications to its schedule of credits and charges will not impose a burden on competition because the Exchange's execution services are completely voluntary and subject to extensive competition both from the other 12 live exchanges and from off-exchange venues, which include 32 alternative trading systems. The Exchange notes that it operates in a highly competitive market in which market participants can readily favor competing venues if they deem fee levels at a particular venue to be excessive, or rebate opportunities available at other venues to be more favorable. In such an environment, the Exchange must continually adjust its fees to remain competitive with other exchanges and with alternative trading systems that have been exempted from compliance with the statutory standards applicable to exchanges. Because competitors are free to modify their own fees in response, and because market participants may readily adjust their order routing practices, the Exchange believes that the degree to which fee changes in this market may impose any burden on competition is extremely limited.

The proposed restated schedule of credits and charges and the proposed modifications to the QMM Program are reflective of this competition because, as a threshold issue, the Exchange is a relatively small market so its ability to burden intermarket competition is limited. In this regard, even the largest U.S. equities exchange by volume only has 17–18% market share, which in most markets could hardly be categorized as having enough market power to burden competition. Moreover, as noted above, price competition between exchanges is fierce, with liquidity and market share moving freely between exchanges in reaction to fee and credit changes. This is in addition to free flow of order flow to and among off-exchange venues which comprised more than 37% of industry volume for the month of July 2019.

In sum, the Exchange intends for the proposed fees and credits and modified QMM Program to increase member incentives to remove liquidity from the Exchange and to contribute to market quality, which is reflective of fierce competition for order flow noted above; however, if the proposed fees and credits are unattractive to market participants, it is likely that the Exchange will either fail to increase its market share or even lose market share as a result. Accordingly, the Exchange does not believe that the proposed new fees and credits will impair the ability of members or competing order execution venues to maintain their competitive standing in the financial markets.

C. Self-Regulatory Organization's Statement on Comments on the Proposed Rule Change Received From Members, Participants, or Others

No written comments were either solicited or received.

III. Date of Effectiveness of the Proposed Rule Change and Timing for Commission Action

The foregoing rule change has become effective pursuant to Section 19(b)(3)(A)(ii) of the Act.[14]

At any time within 60 days of the filing of the proposed rule change, the Commission summarily may temporarily suspend such rule change if it appears to the Commission that such action is: (i) Necessary or appropriate in the public interest; (ii) for the protection of investors; or (iii) otherwise in furtherance of the purposes of the Act. If the Commission takes such action, the Commission shall institute proceedings to determine whether the proposed rule should be approved or disapproved.

IV. Solicitation of Comments

Interested persons are invited to submit written data, views, and arguments concerning the foregoing, including whether the proposed rule change is consistent with the Act. Comments may be submitted by any of the following methods:

Electronic Comments

- Use the Commission's internet comment form (*http://www.sec.gov/rules/sro.shtml*); or
- Send an email to *rule-comments@sec.gov*. Please include File Number SR–Phlx–2019–35 on the subject line.

Paper Comments

- Send paper comments in triplicate to Secretary, Securities and Exchange Commission, 100 F Street NE, Washington, DC 20549–1090.

All submissions should refer to File Number SR–Phlx–2019–35. This file number should be included on the subject line if email is used. To help the Commission process and review your comments more efficiently, please use only one method. The Commission will post all comments on the Commission's internet website (*http://www.sec.gov/rules/sro.shtml*). Copies of the submission, all subsequent amendments, all written statements with respect to the proposed rule change that are filed with the

[14] 15 U.S.C. 78s(b)(3)(A)(ii).

Commission, and all written communications relating to the proposed rule change between the Commission and any person, other than those that may be withheld from the public in accordance with the provisions of 5 U.S.C. 552, will be available for website viewing and printing in the Commission's Public Reference Room, 100 F Street NE, Washington, DC 20549, on official business days between the hours of 10:00 a.m. and 3:00 p.m. Copies of the filing also will be available for inspection and copying at the principal office of the Exchange. All comments received will be posted without change. Persons submitting comments are cautioned that we do not redact or edit personal identifying information from comment submissions. You should submit only information that you wish to make available publicly. All submissions should refer to File Number SR–Phlx–2019–35 and should be submitted on or before October 21, 2019.

For the Commission, by the Division of Trading and Markets, pursuant to delegated authority.[15]

Jill M. Peterson,

Assistant Secretary.

[FR Doc. 2019–21092 Filed 9–27–19; 8:45 am]

BILLING CODE 8011–01–P

[15] 17 CFR 200.30–3(a)(12).

SECURITIES AND EXCHANGE COMMISSION

Submission for OMB Review; Comment Request

Upon Written Request, Copies Available From: Securities and Exchange Commission, Office of FOIA Services, 100 F Street NE, Washington, DC 20549–2736

Extension:

Rule 7d–1, OMB Control No. 3235–0311, SEC File No. 270–176

Notice is hereby given that, pursuant to the Paperwork Reduction Act of 1995 (44 U.S.C. 3501–3520), the Securities and Exchange Commission (the ''Commission'') has submitted to the Office of Management and Budget a request for extension of the previously approved collection of information discussed below.

Section 7(d) of the Investment Company Act of 1940 (15 U.S.C. 80a–7(d)) (the ''Act'' or ''Investment Company Act'') requires an investment company (''fund'') organized outside the United States (''foreign fund'') to obtain an order from the Commission allowing the fund to register under the Act before making a public offering of its securities through the United States mail or any means of interstate commerce. The Commission may issue an order only if it finds that it is both legally and practically feasible effectively to enforce the provisions of the Act against the foreign fund, and that the registration of the fund is consistent with the public interest and protection of investors.

Rule 7d–1 (17 CFR 270.7d–1) under the Act, which was adopted in 1954, specifies the conditions under which a Canadian management investment company (''Canadian fund'') may request an order from the Commission permitting it to register under the Act. Although rule 7d–1 by its terms applies only to Canadian funds, other foreign funds generally have agreed to comply with the requirements of rule 7d–1 as a prerequisite to receiving an order permitting the foreign fund's registration under the Act.

The rule requires a Canadian fund proposing to register under the Act to file an application with the Commission that contains various undertakings and agreements of the fund. The requirement for the Canadian fund to file an application is a collection of information under the Paperwork Reduction Act. Certain of the undertakings and agreements, in turn, impose the following additional information collection requirements:

(1) The fund must file with the Commission agreements between the fund and its directors, officers, and service providers requiring them to comply with the fund's charter and bylaws, the Act, and certain other obligations relating to the undertakings and agreements in the application;

(2) The fund and each of its directors, officers, and investment advisers that is not a U.S. resident, must file with the Commission an irrevocable designation of the fund's custodian in the United States as agent for service of process;

(3) The fund's charter and bylaws must provide that (a) the fund will comply with certain provisions of the Act applicable to all funds, (b) the fund will maintain originals or copies of its books and records in the United States, and (c) the fund's contracts with its custodian, investment adviser, and principal underwriter, will contain certain terms, including a requirement that the adviser maintain originals or copies of pertinent records in the United States;

(4) The fund's contracts with service providers will require that the provider perform the contract in accordance with the Act, the Securities Act of 1933 (15 U.S.C. 77a), and the Securities Exchange Act of 1934 (15 U.S.C. 78a), as applicable; and

(5) The fund must file, and periodically revise, a list of persons affiliated with the fund or its adviser or underwriter.

As noted above, under section 7(d) of the Act the Commission may issue an order permitting a foreign fund's registration only if the Commission finds that ''by reason of special circumstances or arrangements, it is both legally and practically feasible effectively to enforce the provisions of the (Act).'' The information collection requirements are necessary to assure that the substantive provisions of the Act may be enforced as a matter of contract right in the United States or Canada by the fund's shareholders or by the Commission.

Rule 7d–1 also contains certain information collection requirements that are associated with other provisions of the Act. These requirements are applicable to all registered funds and are outside the scope of this request.

The Commission believes that one foreign fund is registered under rule 7d–1 and currently active. Apart from requirements under the Act applicable to all registered funds, rule 7d–1 imposes ongoing burdens to maintain records in the United States, and to update, as necessary, certain fund agreements, designations of the fund's custodian as service agent, and the fund's list of affiliated persons. The Commission staff estimates that each year under the rule, the active registrant and its directors, officers, and service providers engage in the following collections of information and associated burden hours:

- For the fund and its investment adviser to maintain records in the United States:[1] 0 hours: 0 minutes of compliance clerk time.
- For the fund to update its list of affiliated persons: 2 hours: 2 hours of support staff time.
- For new officers, directors, and service providers to enter into and file agreements requiring them to comply with the fund's charter and bylaws, the

[1] The rule requires an applicant and its investment adviser to maintain records in the United States (which, without the requirement, might be maintained in Canada or another foreign jurisdiction), which facilitates routine inspections and any special investigations of the fund by Commission staff. The registrant and its investment adviser, however, already maintain the registrant's records in the United States and in no other jurisdiction. Therefore, maintenance of the registrant's records in the United States does not impose an additional burden beyond that imposed by other provisions of the Act. Those provisions are applicable to all registered funds and the compliance burden of those provisions is outside the scope of this request.

Act, and certain other obligations: 0.5 hours: 7.5 minutes of director time; 2.5 minutes of officer time; 20 minutes of support staff time.

• For new officers, directors, and investment advisers who are not residents of the United States to file irrevocable designation of the fund's custodian as agent for process of service: 0.25 hours: 5 minutes of director time; 10 minutes of support staff time.

Based on the estimates above, the Commission estimates that the total annual burden of the rule's paperwork requirements is 2.75 hours.[2] We estimate that directors perform 0.21 hours of these burden hours at a total cost of $930.20,[3] officers perform 0.04 of these burden hours at a total cost of $22.08,[4] and support staff perform 2.5 of these burden hours at a total cost of $175.[5] Thus, the Commission estimates the aggregate annual cost of these burden hours associated with rule 7d–1 is $1,127.28.[6]

If a fund were to file an application under rule 7d–1 to register under the Act, the Commission estimates that the rule would impose initial information collection burdens (for filing an application, preparing the specified charter, bylaw, and contract provisions, designations of agents for service of process, and an initial list of affiliated persons, and establishing a means of keeping records in the United States) of approximately 90 hours for the fund and its associated persons. The Commission is not including these hours in its calculation of the annual burden because no fund has applied to register under the Act pursuant to rule 7d–1 in the last three years.

As noted above, after registration, a Canadian fund may file a supplemental application seeking special relief designed for the fund's particular circumstances. Rule 7d–1 does not mandate these applications. For purposes of this PRA we are assuming one registrant has filed a substantive supplemental application within the past three years. The Commission staff estimates that the rule would impose an additional information collection burden of 5 hours on a fund to comply with the Commission's application process at a cost of $6,136.50.[7] The staff understands that funds also obtain assistance from outside counsel to comply with the Commission's application process and the cost burden of using outside counsel is discussed in Item 13 below.

Therefore, the Commission staff estimates the aggregate annual burden hours of the collection of information associated with rule 7d–1 is 13.25 hours, at a cost of $9,518.34.[8] Amortized over three years we estimate an annual cost burden of $3,172.78 based on an hourly annual burden of 4.42 hours.[9] These estimates of average burden hours are made solely for the purposes of the Paperwork Reduction Act. The estimate is not derived from a comprehensive or even a representative survey or study of Commission rules.

If a Canadian or other foreign fund in the future applied to register under the Act under rule 7d–1, the fund initially might have capital and start-up costs (not including hourly burdens) of an estimated $20,000 to comply with the rule's initial information collection requirements. These costs include legal and processing-related fees for preparing the required documentation (such as the application, charter, bylaw, and contract provisions, designations for service of process, and the list of affiliated persons). Other related costs would include fees for establishing arrangements with a custodian or other agent for maintaining records in the United States, copying and transportation costs for records, and the costs of purchasing or leasing computer equipment, software, or other record storage equipment for records maintained in electronic or photographic form.

The Commission expects that a foreign fund and its sponsors would incur these costs immediately, and that the annualized cost of the expenditures would be $20,000 in the first year. Some expenditures might involve capital improvements, such as computer equipment, having expected useful lives for which annualized figures beyond the first year would be meaningful. These annualized figures are not provided, however, because, in most cases, the expenses would be incurred immediately rather than on an annual basis. The Commission is not including these costs in its calculation of the annualized capital/start-up costs because no fund has applied under rule 7d–1 to register under the Act pursuant to rule 7d–1 in the last three years.

As indicated above, a Canadian fund may file a supplemental application seeking special relief designed for the fund's particular circumstances. Rule 7d–1 does not mandate these applications. The active registrant filed a substantive application in the past three years. The staff understands that funds generally use outside counsel to prepare the application. The staff estimates that outside counsel spends 10 hours preparing the application, including 8 hours by an associate and 2 hours by a partner. Outside counsel billing arrangements vary based on numerous factors, but the staff has estimated the average cost of outside counsel at $400 per hour, based on information received from funds, intermediaries and their counsel. The Commission therefore estimates that the fund would obtain assistance from outside counsel at a cost of $4,000.[10]

These estimates of average costs are made solely for the purposes of the Paperwork Reduction Act. The estimate is not derived from a comprehensive or

[2] This estimate is based on the following calculation: (0 + 2 + 0.5 + 0.25) = 2.75 hours.

[3] The director estimates are based on the following calculations: (7.5 minutes + 5 minutes)/60 minutes per hour = 0.2083 hours; and 0.2083 hours × $4465 per hour = $930.20. The per hour cost estimate is based on estimated hourly compensation for each board member of $558.125 and an average board size of 8 members. The $4465 per hour estimate for a fund board of directors includes a CPI inflation adjustment from the 2009 estimate.

[4] The officer estimates are based on the following calculations: 2.5 minutes/60 minutes per hour = 0.0416 hours; 0.0416 hours × $530 per hour = $22.08. The per hour cost estimate, as well as other internal time cost estimates for management and professional earnings, is based on the figure for chief compliance officers found in SIFMA's *Management & Professional Earnings in the Securities Industry 2013,* modified by Commission staff to account for an 1800-hour work-year and multiplied by 5.35 to account for bonuses, firm size, employee benefits and overhead.

[5] The support staff estimates are based on the following calculations: 2 hours + 20 minutes + 10 minutes = 2.5 hours; and 2.5 hours × $70 per hour = $175. The per hour cost estimate, as well as other internal time cost estimates for office salaries, is based on the figure for compliance clerks found in SIFMA's *Office Salaries in the Securities Industry 2013,* modified by Commission staff to account for an 1800-hour work-year and multiplied by 2.93 to account for bonuses, firm size, employee benefits and overhead.

[6] This estimate is based on the following calculation: $1,127.28 = $930.20 + $22.08 + $175.

[7] The staff estimates that, on average, the fund's investment adviser spends approximately 4 hours to review an application, including 3.5 hours by an assistant general counsel at a cost of $466 per hour, 0.5 hours by an administrative assistant, at a cost of $81 per hour, and the fund's board of directors spends an additional 1 hour at a cost of $4,465 per hour for a total of 5 hours, at a total cost of $6,136.50. This estimate is based on the following calculation: (3.5 hours × $466 per hour) + (0.5 hours × $81 per hour) + (1 hour × $4465 per hour) = $6,136.50.

[8] These estimates are based on the following calculations: 2.75 hours year 1 + 5 hours year 1 + 2.75 hours year 2 + 2.75 hours year 3 = 13.25 hours; $1,127.28 year 1+ $6,136.50 year 1 + $1,127.28 year 2 + $1,127.28 year 3 = $9,518.34. As discussed above, the ongoing compliance burdens for an active fund require updates each year, whereas we estimate to receive one supplemental application each three year period.

[9] The estimates are based on the following calculations: 4.42 hours = 13.25 cumulative burden hours/3 years. Likewise, the amortized cost burden is based on the following calculations: $9,518.34 cumulative 3-year cost burden/3 years = $3,172.78 average annual cost burden.

[10] This estimate is based on the following calculation: 10 hours × $400 per hour = $4,000.

even a representative survey or study of the costs of Commission rules.

An agency may not conduct or sponsor, and a person is not required to respond to, a collection of information unless it displays a currently valid OMB control number.

The public may view the background documentation for this information collection at the following website, *www.reginfo.gov.* Comments should be directed to: (i) Desk Officer for the Securities and Exchange Commission, Office of Information and Regulatory Affairs, Office of Management and Budget, Room 10102, New Executive Office Building, Washington, DC 20503, or by sending an email to: *Shagufta_Ahmed@omb.eop.gov;* and (ii) Charles Riddle, Acting Director/Chief Information Officer, Securities and Exchange Commission, c/o Candace Kenner, 100 F Street NE, Washington, DC 20549 or send an email to: *PRA_Mailbox@sec.gov.* Comments must be submitted to OMB within 30 days of this notice.

Dated: September 24, 2019.

Jill M. Peterson,

Assistant Secretary.

[FR Doc. 2019–21079 Filed 9–27–19; 8:45 am]

BILLING CODE 8011–01–P

SECURITIES AND EXCHANGE COMMISSION

[SEC File No. 270–91, OMB Control No. 3235–0088]

Submission for OMB Review; Comment Request

Upon Written Request, Copies Available From: Securities and Exchange Commission, Office of FOIA Services, 100 F Street NE, Washington, DC 20549–2736.

Extension:
Rule 15Ba2–5

Notice is hereby given that pursuant to the Paperwork Reduction Act of 1995 (''PRA'') (44 U.S.C. 3501 *et seq.*), the Securities and Exchange Commission (''Commission'') has submitted to the Office of Management and Budget (''OMB'') a request for approval of extension of the existing collection of information provided for in Rule 15Ba2–5 (17 CFR 240.15Ba2–5), under the Securities Exchange Act of 1934 (15 U.S.C. 78a *et seq.*) (''Exchange Act'').

On July 7, 1976, effective July 16, 1976 (*see* 41 FR 28948, July 14, 1976), the Commission adopted Rule 15Ba2–5 under the Exchange Act to permit a duly-appointed fiduciary to assume immediate responsibility for the operation of a municipal securities dealer's business. Without the rule, the fiduciary would not be able to assume operation until it registered as a municipal securities dealer. Under the rule, the registration of a municipal securities dealer is deemed to be the registration of any executor, administrator, guardian, conservator, assignee for the benefit of creditors, receiver, trustee in insolvency or bankruptcy, or other fiduciary, appointed or qualified by order, judgment, or decree of a court of competent jurisdiction to continue the business of such municipal securities dealer, provided that such fiduciary files with the Commission, within 30 days after entering upon the performance of his duties, a statement setting forth as to such fiduciary substantially the same information required by Form MSD or Form BD. The statement is necessary to ensure that the Commission and the public have adequate information about the fiduciary.

There is approximately 1 respondent per year that requires an aggregate total of 4 hours to comply with this rule. This respondent makes an estimated 1 annual response. Each response takes approximately 4 hours to complete. Thus, the total compliance burden per year is 4 burden hours. The approximate internal compliance cost per hour is $20, resulting in a total internal cost of compliance for the respondent of approximately $80 (*i.e.,* 4 hours × $20).

An agency may not conduct or sponsor, and a person is not required to respond to, a collection of information under the PRA unless it displays a currently valid OMB control number.

The public may view background documentation for this information collection at the following website: *www.reginfo.gov.* Comments should be directed to: (i) Desk Officer for the Securities and Exchange Commission, Office of Information and Regulatory Affairs, Office of Management and Budget, Room 10102, New Executive Office Building, Washington, DC 20503, or by sending an email to: *Lindsay.M.Abate@omb.eop.gov;* and (ii) Charles Riddle, Acting Director/Chief Information Officer, Securities and Exchange Commission, c/o Candace Kenner, 100 F Street NE, Washington, DC 20549, or by sending an email to: *PRA_Mailbox@sec.gov.* Comments must be submitted to OMB within 30 days of this notice.

Dated: September 24, 2019.

Jill M. Peterson,

Assistant Secretary.

[FR Doc. 2019–21086 Filed 9–27–19; 8:45 am]

BILLING CODE 8011–01–P

SECURITIES AND EXCHANGE COMMISSION

[SEC File No. 270–198, OMB Control No. 3235–0279]

Submission for OMB Review; Comment Request

Upon Written Request, Copies Available From: Securities and Exchange Commission, Office of FOIA Services, 100 F Street NE, Washington, DC 20549–2736.

Extension:
Rule 17a–4

Notice is hereby given that pursuant to the Paperwork Reduction Act of 1995 (''PRA'') (44 U.S.C. 3501 *et seq.*), the Securities and Exchange Commission (''Commission'') has submitted to the Office of Management and Budget (''OMB'') a request for extension of the previously approved collection of information provided for in Rule 17a–4 (17 CFR 240.17a–4), under the Securities Exchange Act of 1934 (15 U.S.C. 78a *et seq.*).

Rule 17a–4 requires approximately 3,764 active, registered exchange members, brokers, and dealers (''broker-dealers'') to preserve for prescribed periods of time certain records required to be made by Rule 17a–3 and other Commission rules, and other kinds of records which firms make or receive in the ordinary course of business. Rule 17a–4 also permits broker-dealers to employ, under certain conditions, electronic storage media to maintain these required records. The records required to be maintained under Rule 17a–4 are used by examiners and other representatives of the Commission to determine whether broker-dealers are in compliance with, and to enforce their compliance with, the Commission's rules.

There are approximately 3,764 active, registered broker-dealers. The staff estimates that the average amount of time necessary to preserve the books and records as required by Rule 17a–4 is 254 hours per broker-dealer per year. In addition, paragraph (b)(11) of Rule 17a–4 requires any broker-dealer that sponsors an internal broker-dealer system to maintain certain records relating to such system for at least three years. The Commission estimates that paragraph (b)(11) of Rule 17a–4 imposes an annual burden of 3 hours per year to maintain the requisite records. The Commission estimates that there are approximately 200 internal broker-dealer systems, resulting in an annual recordkeeping burden of 600 hours. Therefore, the Commission estimates that compliance with Rule 17a–4

requires 956,656 hours each year ((3,764 broker-dealers × 254 hours) + (200 broker-dealers × 3 hours) [1]. These burdens are recordkeeping burdens.

The staff believes that compliance personnel would be charged with ensuring compliance with Commission regulation, including Rule 17a–4. The staff estimates that the hourly salary of a Compliance Clerk is $70 per hour.[2] Based upon these numbers, the total internal cost of compliance for 4,104 respondents is the dollar cost of approximately $67 (956,656 yearly hours × $70). The total burden hour decrease of 86,210 is due to a decrease in the number of respondents from 4,104 to 3,764.

Based on conversations with members of the securities industry and the Commission's experience in the area, the staff estimates that the average broker-dealer spends approximately $5,000 each year to store documents required to be retained under Rule 17a–4. Costs include the cost of physical space, computer hardware and software, etc., which vary widely depending on the size of the broker-dealer and the type of storage media employed. The Commission estimates that the annual reporting and recordkeeping cost burden is $18,820,000. This cost is calculated by the number of active, registered broker-dealers multiplied by the reporting and recordkeeping cost for each respondent (3,764 active, registered broker-dealers × $5,000).

An agency may not conduct or sponsor, and a person is not required to respond to, a collection of information under the PRA unless it displays a currently valid OMB control number.

The public may view the background documentation for this information collection at the following website: *www.reginfo.gov.* Comments should be directed to: (i) Desk Officer for the Securities and Exchange Commission, Office of Information and Regulatory Affairs, Office of Management and Budget, Room 10102, New Executive Office Building, Washington, DC 20503, or by sending an email to: *Lindsay.M.Abate@omb.eop.gov;* and (ii) Charles Riddle, Acting Director/Chief Information Officer, Securities and Exchange Commission, c/o Candace Kenner, 100 F Street NE, Washington, DC 20549, or by sending an email to: *PRA_Mailbox@sec.gov.* Comments must be submitted to OMB within 30 days of this notice.

Dated: September 24, 2019.

Jill M. Peterson,

Assistant Secretary.

[FR Doc. 2019–21081 Filed 9–27–19; 8:45 am]

BILLING CODE 8011–01–P

[1] On June 5, 2019, the Commission adopted Rule 151–1 under the Securities Exchange Act of 1934 establishing a standard of conduct for broker-dealers and natural persons who are associated persons of a broker-dealer when making a recommendation of any securities. *See* Securities Exchange Act Release No. 86031 (June 5, 2019), 84 FR 33318 (July 12, 2019). At the same time, the Commission adopted Exchange Act Rule 17a–14 (CFR 240.17a–14) and Form CRS (17 CFR 249.640) under the Exchange Act. *See* Form CRS Relationship Summary; Amendments to Form ADV Exchange Act Release No. 86032, Advisers Act Release No. 5247, File No. S7–08–18 (June 5, 2019), 84 FR 33492 (July 12, 2019). As part of new Rule 17a–14 and Form CRS, and Regulation Best Interest, the Commission amended Rule 17a–4 by adding new paragraphs (a)(24) and (a)(35). The collections of information and the related burdens associated with these amendments have been separately noticed for comment and are currently under review.

[2] This figure is based on SIFMA's Office Salaries in the Securities Industry 2013, modified by Commission staff to account for an 1,800-hour work-year multiplied by 2.93 to account for bonuses, firm size, employee benefits, and overhead.

SECURITIES AND EXCHANGE COMMISSION

[Release No. 34–87079; File No. SR–CBOE–2019–062]

Self-Regulatory Organizations; Cboe Exchange, Inc.; Notice of Filing and Immediate Effectiveness of a Proposed Rule Change To Amend Certain Clearing Editor Functionality in Rule 6.6 of the Shell Rulebook

September 24, 2019.

Pursuant to Section 19(b)(1) of the Securities Exchange Act of 1934 (the ''Act''),[1] and Rule 19b–4 thereunder,[2] notice is hereby given that on September 18, 2019, Cboe Exchange, Inc. (the ''Exchange'' or ''Cboe Options'') filed with the Securities and Exchange Commission (the ''Commission'') the proposed rule change as described in Items I, and II below, which Items have been prepared by the Exchange. The Exchange filed the proposal as a ''non-controversial'' proposed rule change pursuant to Section 19(b)(3)(A)(iii) of the Act [3] and Rule 19b–4(f)(6) thereunder.[4] The Commission is publishing this notice to solicit comments on the proposed rule change from interested persons.

I. Self-Regulatory Organization's Statement of the Terms of Substance of the Proposed Rule Change

Cboe Exchange, Inc. (the ''Exchange'' or ''Cboe Options'') proposes to amend certain Clearing Editor functionality in Rule 6.6 of the shell Rulebook.

The text of the proposed rule change is also available on the Exchange's website (*http://www.cboe.com/AboutCBOE/CBOELegalRegulatoryHome.aspx*), at the Exchange's Office of the Secretary, and at the Commission's Public Reference Room.

II. Self-Regulatory Organization's Statement of the Purpose of, and Statutory Basis for, the Proposed Rule Change

In its filing with the Commission, the Exchange included statements concerning the purpose of and basis for the proposed rule change and discussed any comments it received on the proposed rule change. The text of these statements may be examined at the places specified in Item IV below. The Exchange has prepared summaries, set forth in sections A, B, and C below, of the most significant aspects of such statements.

A. Self-Regulatory Organization's Statement of the Purpose of, and Statutory Basis for, the Proposed Rule Change

1. Purpose

On September 5, 2019, the Exchange filed a rule filing, SR–CBOE–2019–056, which, amended Exchange Rules in connection with the Cboe Trading Match System (''CTM'').[5] Pursuant to SR–CBOE–2019–056, which will be effective on October 7, 2019, the Exchange proposed to harmonize current Rule 6.67, in connection with the CTM, with C2 Rule 6.31, which provides for the ''Clearing Editor'' and is functionally equivalent to the Exchange's current CTM. Under SR–CBOE–2019–056, Rule 6.6 in the shell Rulebook will govern the Exchange's Clearing Editor and Rule 6.67 will be deleted from the current Rulebook, upon migration.[6] SR–CBOE–2019–056

[1] 15 U.S.C. 78s(b)(1).

[2] 17 CFR 240.19b–4.

[3] 15 U.S.C. 78s(b)(3)(A)(iii).

[4] 17 CFR 240.19b–4(f)(6).

[5] *See* Securities Exchange Act Release No. 86920 (September 10, 2019) (Notice of Filing and Immediate Effectiveness of a Proposed Rule Change Relating to the Cboe Trade Match System) (SR–CBOE–2019–056).

[6] Cboe Options intends to migrate its trading platform to the same system used by the Cboe Affiliated Exchanges (*i.e.,* together with Cboe Options, C2 Exchange, Inc. (''C2''), Cboe EDGA Exchange, Inc. (''EDGA''), Cboe EDGX Exchange, Inc. (''EDGX'' or ''EDGX Options''), Cboe BZX Exchange, Inc. (''BZX'' or ''BZX Options''), and Cboe BYX Exchange, Inc. (''BYX'')) which the Exchange expects to complete on October 7, 2019. In connection with this technology migration, the Exchange has a shell Rulebook that resides alongside its current Rulebook, which shell Rulebook will contain the Rules that will be in place upon completion of the Cboe Options technology migration.

intended to amend the rule to conform to the Clearing Editor functionality and rule language of that of C2 to the extent necessary to retain intended differences unique to Cboe Options market-model, functionality, and/or rule text. However, the Exchange now proposes to update Rule 6.6 in the shell Rulebook to describe additional functionality that is unique to the Exchange that was inadvertently not included in that previously filing. In order to coincide with the effective date of SR–CBOE–2019–056 and the migration of the Exchange's trading platform to the same system used by the Cboe Affiliated Exchanges,[7] the Exchange also intends to implement this proposed rule change on October 7, 2019.

In particular, the Exchange inadvertently removed paragraph (b) under current Rule 6.67, which currently applies to both trades executed electronically and in open outcry, which is unique to Cboe Options, and will continue to apply to trades executed in open outcry upon migration. Specifically, current Rule 6.67(b) permits Trading Permit Holders (''TPHs'') to change certain fields in CTM (Clearing Editor, as proposed), including series, quantity, buy or sell, and premium price, only if they provide notice to the Exchange. While the Exchange notes the removal this provision as it relates to trades executed electronically and in conformity with C2 Rule 6.31 is accurate, it will continue to apply to open outcry trades post-migration. Therefore, the Exchange now proposes to amend Rule 6.6 in the shell Rulebook and add Rule 6.6(d), which is substantively the same as current Rule 6.67(b) that was inadvertently removed under SR–CBOE–2019–056. Specifically, proposed Rule 6.6(d) states that, in addition to the fields listed in paragraph (b), Trading Permit Holders may change the following fields through the Clearing Editor for trades executed in open outcry: (1) Series, (2) Quantity, (3) Buy or Sell; or (4) Price. Each of these changes must be accompanied by a Reason Code. Notification of changes made pursuant to this paragraph (d) will automatically be sent to the Exchange with the submission of the changes through the Clearing Editor. The proposed rule change updates the language to make it explicit that proposed Rule 6.6(d) applies only to trades executed in open outcry. It also updates the term premium price to price and Customer ID (in Rule 6.6(a)) to Client Order ID, as these terms more accurately reflect the names of the fields that are displayed on an order[8] and in the Clearing Editor, as well as the term origin code to Capacity code, which is in line with the language in Rule 6.6 and definition currently in the shell Rulebook.[9] The current rule provides that notification of the change shall be made as soon as practicable, but no later than 15 minutes after the change has been made. The proposed rule change does not incorporate this language because, upon migration, the Exchange will automatically receive notification of changes to the fields listed under proposed Rule 6.6(d) when a TPH submits changes through use of the Clearing Editor. The automatic notification will include a Reason Code associated with each change in which a TPH will be prompted to provide in the Clearing Editor when making changes pursuant to proposed Rule 6.6(d).[10] Therefore, the Exchange notes that the proposed rule does not substantively alter the notification requirement attached to proposed Rule 6.6(d), but only updates it to accurately reflect the manner in which notice will automatically be submitted to the Exchange through use of the Clearing Editor.

In addition, the proposed rule change adds certain Cboe Options-specific fields to the list of fields that do not require a reason code under proposed Rule 6.6(b). The Exchange now proposes to incorporate Strategy ID,[11] Frequent Trader ID,[12] Compression Trade ID,[13] and ORS ID[14] to the list of fields that a TPH may change through the Clearing Editor (for both trades executed electronically and in open outcry) without notice to the Exchange. These fields are unique to orders executed on Cboe Options[15] and TPHs currently submit all updates to such fields to the Exchange populated via a form post-execution today.[16] Upon migration, the Exchange functionality will allow for automated entry for these fields, just like all other order fields. Therefore, the proposed amendment merely intends to make it explicit that TPHs may continue to submit updates to these fields post-execution. The Exchange also proposes to clarify that a TPH may make a change from a Capacity code (C) to any other Capacity code only if the change is accompanied by a Reason Code and, like proposed paragraph (d), makes it explicit that notice of such change will automatically be sent to the Exchange with the submission of the change through the Clearing Editor. This is substantially the same manner in which current Rule 6.67 functions, where both Rule 6.67(a) and (b) are applicable to trades executed electronically and on open outcry (therefore, changing a customer Capacity code is permissible under current Rule 6.67 for all trades executed if notification is provided to the Exchange). The Exchange proposes to maintain that a TPH may change the Capacity code from a customer Capacity code to any other Capacity code for trades executed electronically or in open outcry, however, it still must provide notification to the Exchange via a prompted Reason Code and, like changes made pursuant to proposed paragraph (d), will automatically provide such notification to the Exchange when the change is submitted through the Clearing Editor.

2. Statutory Basis

The Exchange believes the proposed rule change is consistent with the Securities Exchange Act of 1934 (the ''Act'') and the rules and regulations thereunder applicable to the Exchange and, in particular, the requirements of Section 6(b) of the Act.[17] Specifically, the Exchange believes the proposed rule change is consistent with the Section 6(b)(5)[18] requirements that the rules of an exchange be designed to prevent fraudulent and manipulative acts and practices, to promote just and equitable principles of trade, to foster cooperation and coordination with persons engaged in regulating, clearing, settling, processing information with respect to, and facilitating transactions in

[7] *See id.*

[8] *See* Cboe Options FIX Specifications, available at: *https://cdn.cboe.com/resources/membership/US_Options_FIX_Specification.pdf.*

[9] *See* Rule 1.1 in the shell Rulebook.

[10] Example Reason Codes include: Input Error; Unmatched Trade; Unknown; Manual Add; Other Text Required; Trade Nullification; Trade Adjustment; Error Account; and System Issue.

[11] Strategy ID indicates whether an order qualifies for certain treatment for various strategies provided under the Exchange's Fees Schedule. *See* Cboe Exchange, Inc. Fees Schedule (for example, footnote 13).

[12] Frequent Trader ID is a unique identification number which can be appended by executing agents to orders submitted to the Exchange on behalf of those customers registered for the Frequent Trader Program. *See* Cboe Exchange, Inc. Fees Schedule, ''Frequent Trader Program'' Table.

[13] Compression Trader ID indicates whether an order qualifies for certain treatment in connection with facilitating a compression of options positions. *See* Cboe Exchange, Inc. Fees Schedule, footnote 41.

[14] ORS ID indicates whether an order qualifies for certain treatment under the ORS Program. *See* Cboe Options Exchange, Inc. Fees Schedule, ''Order Router Subsidy Program'' Table.

[15] *See supra* note 8.

[16] The Exchange notes that TPHs may currently update Frequent Trader ID via CTM. *See* Securities Exchange Act Release No. 86617 (August 9, 2019), 84 FR 41776 (August 15, 2019) Notice of Filing and Immediate Effectiveness of a Proposed Rule Change To Amend the Ability To Submit Frequent Trader Forms (SR–CBOE–2019–043).

[17] 15 U.S.C. 78f(b).

[18] 15 U.S.C. 78f(b)(5).

securities, to remove impediments to and perfect the mechanism of a free and open market and a national market system, and, in general, to protect investors and the public interest. Additionally, the Exchange believes the proposed rule change is consistent with the Section 6(b)(5) [19] requirement that the rules of an exchange not be designed to permit unfair discrimination between customers, issuers, brokers, or dealers.

The proposed rule change is substantively the same as the manner in which the CTM rules and post-execution functionality and/or processes work today. The proposed change merely amends the rule proposed under SR–CBOE–2019–056 to permit changes in certain fields that TPHs are already permitted to change through the Clearing Editor or other post-execution forms. The proposed change is intended to correct an inadvertent omission from Rule 6.6 in the shell Rulebook of a provision from Rule 6.67 in the current Rulebook that currently applies to open outcry executions, and will continue to apply to open outcry executions upon migration. Likewise, the Exchange notes that TPHs may currently update fields that require notification for trades executed in open outcry and make changes made from customer Capacity code (C), with the same requisite notice. Therefore, the proposed change does not alter the manner in which the current rule functions but instead removes impediments to and perfects the mechanism of a free and open market and national market system by continuing to allow for these functions, along with automatic notification containing reason codes transmitted to the Exchange through submission of the changes in the Clearing Editor, upon migration. Additionally, the Exchange notes that the proposed amendment to add certain fields for which updates do not require notification to the rule will remove impediments to and perfect the mechanism of a free and open market and national market system because TPHs may already submit updates to these fields (in paper form) post-execution and the rule is designed to continue to allow TPHs to make such updates post-execution in electronic form upon migration.

B. Self-Regulatory Organization's Statement on Burden on Competition

The Exchange does not believe that the proposed change will impose any burden on competition that is not necessary or appropriate in furtherance of the purposes of the Act. The proposed amendment merely updates Rule 6.6 in the shell Rulebook to continue to allow for certain post-execution changes, which are currently permitted on the Exchange, through the use of the Clearing Editor after October 7, 2019. The Exchange notes that all proposed changes and current changes made pursuant to Rule 6.6 occur post-execution, therefore will not have any impact on trading. As the same post-execution changes are already permitted and made via processes and functionality currently in place on the Exchange, the Exchange believes this proposed filing to allow for the continuation of the same post-execution changes through use of the Clearing Editor will have no impact on competition. The Exchange also notes that the proposed change is intended to reduce the compliance burden on TPHs by providing them with functionality that allows for automatic input and notification to the Exchange.

C. Self-Regulatory Organization's Statement on Comments on the Proposed Rule Change Received From Members, Participants, or Others

The Exchange neither solicited nor received comments on the proposed rule change.

III. Date of Effectiveness of the Proposed Rule Change and Timing for Commission Action

Because the foregoing proposed rule change does not: (i) Significantly affect the protection of investors or the public interest; (ii) impose any significant burden on competition; and (iii) become operative for 30 days from the date on which it was filed, or such shorter time as the Commission may designate, it has become effective pursuant to Section 19(b)(3)(A) of the Act [20] and Rule 19b–4(f)(6) thereunder.[21]

A proposed rule change filed pursuant to Rule 19b–4(f)(6) under the Act [22] normally does not become operative for 30 days after the date of its filing. However, Rule 19b–4(f)(6)(iii) [23] permits the Commission to designate a shorter time if such action is consistent with the protection of investors and the public interest. The Exchange has asked the Commission to waive the 30-day operative delay. The Exchange believes that waiver of the operative delay is consistent with the protection of investors and the public interest because, as the Exchange discussed above, its proposal complements its recent filing, SR–CBOE–2019–056, in which it conformed the rule governing the Clearing Editor to that of C2 but inadvertently omitted from that proposal current Cboe-specific provisions that the Exchange wishes to maintain post migration. Accordingly, its proposal is designed to preserve current functionality in order to continue to permit TPHs to make certain post-execution changes after October 7, 2019 through the use of the Clearing Editor. The Commission believes that waiver of the 30-day operative delay is consistent with the protection of investors and the public interest because the proposal does not raise any new or novel issues, and waiver will allow the changes in this filing to align with the proposed amendments to Rule 6.6 that the Exchange adopted pursuant to SR–CBOE–2019–056, thereby minimizing disruptions to TPHs and their customers with respect to post-execution functionality and processes available on the Exchange. Therefore, the Commission hereby waives the operative delay and designates the proposal as operative upon filing.[24]

At any time within 60 days of the filing of the proposed rule change, the Commission summarily may temporarily suspend such rule change if it appears to the Commission that such action is necessary or appropriate in the public interest, for the protection of investors, or otherwise in furtherance of the purposes of the Act. If the Commission takes such action, the Commission shall institute proceedings to determine whether the proposed rule change should be approved or disapproved.

IV. Solicitation of Comments

Interested persons are invited to submit written data, views and arguments concerning the foregoing, including whether the proposed rule change is consistent with the Act. Comments may be submitted by any of the following methods:

Electronic Comments

- Use the Commission's internet comment form (*http://www.sec.gov/rules/sro.shtml*); or

[19] *Id.*

[20] 15 U.S.C. 78s(b)(3)(A).

[21] 17 CFR 240.19b–4(f)(6). In addition, Rule 19b–4(f)(6)(iii) requires a self-regulatory organization to give the Commission written notice of its intent to file the proposed rule change, along with a brief description and text of the proposed rule change, at least five business days prior to the date of filing of the proposed rule change, or such shorter time as designated by the Commission. The Exchange has satisfied this requirement.

[22] 17 CFR 240.19b–4(f)(6).

[23] 17 CFR 240.19b–4(f)(6)(iii).

[24] For purposes only of waiving the 30-day operative delay, the Commission also has considered the proposed rule's impact on efficiency, competition, and capital formation. *See* 15 U.S.C. 78c(f).

• Send an email to *rule-comments@sec.gov.* Please include File Number SR–CBOE–2019–062 on the subject line.

Paper Comments

• Send paper comments in triplicate to Secretary, Securities and Exchange Commission, 100 F Street NE, Washington, DC 20549–1090.

All submissions should refer to File Number SR–CBOE–2019–062. This file number should be included on the subject line if email is used. To help the Commission process and review your comments more efficiently, please use only one method. The Commission will post all comments on the Commission's internet website (*http://www.sec.gov/rules/sro.shtml*). Copies of the submission, all subsequent amendments, all written statements with respect to the proposed rule change that are filed with the Commission, and all written communications relating to the proposed rule change between the Commission and any person, other than those that may be withheld from the public in accordance with the provisions of 5 U.S.C. 552, will be available for website viewing and printing in the Commission's Public Reference Room, 100 F Street NE, Washington, DC 20549, on official business days between the hours of 10:00 a.m. and 3:00 p.m. Copies of the filing also will be available for inspection and copying at the principal office of the Exchange. All comments received will be posted without change. Persons submitting comments are cautioned that we do not redact or edit personal identifying information from comment submissions. You should submit only information that you wish to make available publicly. All submissions should refer to File Number SR–CBOE–2019–062 and should be submitted on or before October 21, 2019.

For the Commission, by the Division of Trading and Markets, pursuant to delegated authority.[25]

Jill M. Peterson,

Assistant Secretary.

[FR Doc. 2019–21103 Filed 9–27–19; 8:45 am]

BILLING CODE 8011–01–P

[25] 17 CFR 200.30–3(a)(12).

SECURITIES AND EXCHANGE COMMISSION

Submission for OMB Review; Comment Request

Upon Written Request, Copies Available From: Securities and Exchange Commission, Office of FOIA Services, 100 F Street NE, Washington, DC 20549–2736.

Extension:

Rule 10b–10, SEC File No. 270–389, OMB Control No. 3235–0444.

Notice is hereby given that, pursuant to the Paperwork Reduction Act of 1995 (44 U.S.C. 3501 *et seq.*) (''PRA''), the Securities and Exchange Commission (''Commission'') has submitted to the Office of Management and Budget (''OMB'') a request for approval of extension of the previously approved collection of information provided for in Rule 10b–10 (17 CFR 240.10b–10) under the Securities and Exchange Act of 1934 (15 U.S.C. 78a *et seq.*).

Rule 10b–10 requires broker-dealers to convey specified information to customers regarding their securities transactions. This information includes the date and time of the transaction, the identity and number of shares bought or sold, and whether the broker-dealer acts as agent for the customer or as principal for its own account. Depending on whether the broker-dealer acts as agent or principal, Rule 10b–10 requires the disclosure of commissions, as well as mark-up and mark-down information. For transactions in debt securities, Rule 10b–10 requires the disclosure of redemption and yield information. Rule 10b–10 potentially applies to all of the approximately 3,750 firms registered with the Commission that effect transactions for or with customers.

Based on information provided by registered broker-dealers to the Commission in FOCUS Reports, the Commission staff estimates that on average, registered broker-dealers process approximately 18,843,624,843 order tickets per year for transactions for or with customers. Each order ticket representing a transaction effected for or with a customer generally results in one confirmation. Therefore, the Commission staff estimates that approximately 18,843,624,843 confirmations are sent to customers annually. The confirmations required by Rule 10b–10 are generally processed through automated systems. It takes approximately 30 seconds to generate and send a confirmation. Accordingly, the Commission staff estimates that broker-dealers spend approximately 157,030,207 hours per year complying with Rule 10b–10 ($18,843,624,843 \times .5 \div 60$).

The amount of confirmations sent and the cost of sending each confirmation varies from firm to firm. Smaller firms generally send fewer confirmations than larger firms because they effect fewer transactions. The Commission staff estimates the costs of producing and sending a paper confirmation, including postage, to be approximately 63 cents. The Commission staff also estimates that the cost of producing and sending a wholly electronic confirmation is approximately 39 cents. Based on informal discussions with industry participants, as well as representations made in requests for exemptive and no-action letters relating to Rule 10b–10, the staff estimates that broker-dealers used electronic confirmations for approximately 35 percent of transactions. Based on these calculations, Commission staff estimates that 12,248,356,148 paper confirmations are mailed each year at a cost of $7,716,464,373. Commission staff also estimates that 6,595,268,695 wholly electronic confirmations are sent each year at a cost of $2,572,154,791. Accordingly, Commission staff estimates that the total annual cost associated with generating and delivering to investors the information required under Rule 10b–10 would be $10,288,619,164.

An agency may not conduct or sponsor, and a person is not required to respond to, a collection of information under the PRA unless it displays a currently valid OMB control number.

The public may view background documentation for this information collection at the following website: *www.reginfo.gov.* Comments should be directed to: (i) Desk Officer for the Securities and Exchange Commission, Office of Information and Regulatory Affairs, Office of Management and Budget, Room 10102, New Executive Office Building, Washington, DC 20503, or by sending an email to: *Lindsay.M.Abate@omb.eop.gov;* and (ii) Charles Riddle, Acting Director/Chief Information Officer, Securities and Exchange Commission, c/o Candace Kenner, 100 F Street NE, Washington, DC 20549, or by sending an email to: *PRA_Mailbox@sec.gov.* Comments must be submitted to OMB within 30 days of this notice.

Dated: September 24, 2019.

Jill M. Peterson,

Assistant Secretary.

[FR Doc. 2019–21083 Filed 9–27–19; 8:45 am]

BILLING CODE 8011–01–P

SECURITIES AND EXCHANGE COMMISSION

Sunshine Act Meetings

TIME AND DATE: Notice is hereby given, pursuant to the provisions of the Government in the Sunshine Act, Public

Law 94–409, that the Securities and Exchange Commission staff will hold a public roundtable on Thursday, October 3, 2019 at 9:30 a.m.

PLACE: The roundtable will be held in Multi-Purpose Room LL–006 at the Commission's headquarters, 100 F Street NE, Washington, DC.

STATUS: The meeting will begin at 9:30 a.m. and will be open to the public. Seating will be on a first-come, first-served basis. Doors will open at 9:00 a.m. Visitors will be subject to security checks. The meeting will be webcast on the Commission's website at *www.sec.gov*.

MATTERS TO BE CONSIDERED: The Commission staff will host a roundtable on combating elder investor fraud. The roundtable is open to the public and the public is invited to submit written comments. This Sunshine Act notice is being issued because a majority of the Commission may attend the roundtable.

The agenda for the roundtable will focus on the types of fraudulent and manipulative schemes currently targeting elder investors. The roundtable will explore views from a broad range of regulators and industry experts on potential steps regulators, broker-dealers, investment advisers, and others can take to identify and combat elder investor fraud.

CONTACT PERSON FOR MORE INFORMATION: For further information, please contact Vanessa A. Countryman from the Office of the Secretary at (202) 551–5400.

Dated: September 26, 2019.

Vanessa A. Countryman,

Secretary.

[FR Doc. 2019–21309 Filed 9–26–19; 4:15 pm]

BILLING CODE 8011–01–P

SECURITIES AND EXCHANGE COMMISSION

[Release No. 34–87091; File No. SR–NYSEArca–2019–49]

Self-Regulatory Organizations; NYSE Arca Inc.; Notice of Withdrawal of Proposed Rule Change To Amend the NYSE Arca Options Fee Schedule To Modify the Options Regulatory Fee

September 24, 2019.

On July 2, 2019, NYSE Arca, Inc. (''Exchange'') filed with the Securities and Exchange Commission (''Commission''), pursuant to Section 19(b)(1) of the Securities Exchange Act of 1934 (''Act''),[1] and Rule 19b–4 thereunder,[2] a proposed rule change to amend the Exchange's fee schedule to modify the amount of its Options Regulatory Fee. The proposed rule change was immediately effective upon filing with the Commission pursuant to Section 19(b)(3)(A) of the Act.[3] The proposed rule change was published for comment in the **Federal Register** on July 22, 2019.[4] The Commission received one comment letter, which criticized the proposal.[5] On September August 30, 2019, pursuant to Section 19(b)(3)(C) of the Act, the Commission temporarily suspended the proposed rule change and instituted proceedings under Section 19(b)(2)(B) of the Act to determine whether to approve or disapprove the proposed rule change.[6]

On September 16, 2019, the Exchange withdrew the proposed rule change (SR–NYSEArca–2019–49).

For the Commission, by the Division of Trading and Markets, pursuant to delegated authority.[7]

Jill M. Peterson,

Assistant Secretary.

[FR Doc. 2019–21105 Filed 9–27–19; 8:45 am]

BILLING CODE 8011–01–P

[1] 15 U.S.C. 78s(b)(1).

[2] 17 CFR 240.19b–4.

[3] 15 U.S.C. 78s(b)(3)(A).

[4] *See* Securities Exchange Act Release No. 86390 (July 16, 2019), 84 FR 35169.

[5] *See* Letter to Vanessa Countryman, Secretary, Commission, from Ellen Greene, Managing Director, Securities Industry and Financial Markets Association, dated August 27, 2019.

[6] *See* Securities Exchange Act Release No. 86832, 84 FR 46980 (September 6, 2019).

[7] 17 CFR 200.30–3(a)(12).

SECURITIES AND EXCHANGE COMMISSION

Submission for OMB Review; Comment Request

Upon Written Request, Copies Available From: Securities and Exchange Commission, Office of FOIA Services, 100 F Street NE, Washington, DC 20549–2736.

Extension:

Rule 15Bc3–1 and Form MDSW—Withdrawal from Registration of Municipal Securities Dealers, SEC File No. 270–93, OMB Control No. 3235–0087.

Notice is hereby given that, pursuant to the Paperwork Reduction Act of 1995 (''PRA'') (44 U.S.C. 3501 *et seq.*), the Securities and Exchange Commission (''Commission'') has submitted to the Office of Management and Budget (''OMB'') a request for approval of extension of the previously approved collection of information provided for in Rule 15Bc3–1 (17 CFR 240.15Bc3–1) and Form MSDW (17 CFR 249.1110) under the Securities Exchange Act of 1934 (15 U.S.C. 78a *et seq.*).

Rule 15Bc3–1 provides that a notice of withdrawal from registration with the Commission as a bank municipal securities dealer must be filed on Form MSDW. The Commission uses the information contained in Form MSDW in determining whether it is in the public interest to permit a bank municipal securities dealer to withdraw its registration. This information is also important to the municipal securities dealer's customers and to the public, because it provides, among other things, the name and address of a person to contact regarding any of the municipal securities dealer's unfinished business.

Based upon past submissions of one filing in 2016, two filings in 2017, zero filings in 2018, and one filing so far in 2019, the staff estimates that, on an annual basis, approximately one bank municipal securities dealer will file a notice of withdrawal from registration with the Commission as a bank municipal securities dealer on Form MSDW. The staff estimates that the average number of hours necessary to comply with the notice requirements set out in Rule 15Bc3–1 and Form MSDW is 0.5 per respondent, for a total burden of 0.5 hours per year. The staff estimates that the average internal compliance cost per hour is approximately $417.[1] Therefore, the estimated total annual cost of compliance is approximately $209 per year (0.5 hours/year × $417/hour = $208.5/year, rounded up to $209).

Rule 15Bc3–1 does not contain an explicit recordkeeping requirement, but the instructions for filing Form MSDW state that an exact copy should be retained by the registrant. Providing the information on the application is mandatory in order to withdraw from registration with the Commission as a bank municipal securities dealer. The information contained in the notice will not be kept confidential.

An agency may not conduct or sponsor, and a person is not required to respond to, a collection of information under the PRA unless it displays a currently valid OMB control number. The public may view background documentation for this information collection at the following website: *www.reginfo.gov.* Comments should be directed to: (i) Desk Officer for the Securities and Exchange Commission, Office of Information and Regulatory

[1] The estimate of $417 per hour is for a compliance attorney, based on the Securities Industry and Financial Markets Association's Management & Professional Earnings in the Securities Industry 2013, modified by Commission staff to account for an 1800-hour work-year and inflation, and multiplied by 5.35 to account for bonuses, firm size, employee benefits and overhead.

Affairs, Office of Management and Budget, Room 10102, New Executive Office Building, Washington, DC 20503, or by sending an email to: *Lindsay.M.Abate@omb.eop.gov*; and (ii) Charles Riddle, Acting Director/Chief Information Officer, Securities and Exchange Commission, c/o Candace Kenner, 100 F Street NE, Washington, DC 20549, or by sending an email to: *PRA_Mailbox@sec.gov.* Comments must be submitted to OMB within 30 days of this notice.

Dated: September 24, 2019.

Jill M. Peterson,

Assistant Secretary.

[FR Doc. 2019–21085 Filed 9–27–19; 8:45 am]

BILLING CODE 8011–01–P

SECURITIES AND EXCHANGE COMMISSION

[Release No. 34–87075; File No. SR–MSRB–2019–11]

Self-Regulatory Organizations; Municipal Securities Rulemaking Board; Notice of Filing and Immediate Effectiveness of a Proposed Rule Change To Amend MSRB Rule A–11, on Assessments for Municipal Advisor Professionals, To Increase the Annual Professional Fee Over a Two-Year Phase-In Period

September 24, 2019.

Pursuant to Section 19(b)(1) of the Securities Exchange Act of 1934 (''Act'' or ''Exchange Act'') [1] and Rule 19b–4 thereunder,[2] notice is hereby given that on September 11, 2019 the Municipal Securities Rulemaking Board (''MSRB'') filed with the Securities and Exchange Commission (''SEC'' or ''Commission'') the proposed rule change as described in Items I, II, and III below, which Items have been prepared by the MSRB. The Commission is publishing this notice to solicit comments on the proposed rule change from interested persons.

I. Self-Regulatory Organization's Statement of the Terms of Substance of the Proposed Rule Change

The MSRB filed with the Commission a proposed rule change to amend MSRB Rule A–11, on assessments for municipal advisor professionals, to increase the annual professional fee over a two-year phase-in period from $500 to $1,000 (the ''Revised Professional Fee'') for each person associated with the municipal advisor who is qualified as a municipal advisor representative in accordance with MSRB Rule G–3 and for whom the municipal advisor has a Form MA–I [3] on file with the Commission (each a ''covered representative'') and to make other technical changes (the ''proposed rule change''). The phase-in period of the Revised Professional Fee will operate as follows: [4]

- MSRB fiscal year 2020 [5] will be year one of the phase-in period, with municipal advisors being assessed $750 for each covered representative as of January 31, 2020. The payment of $750 per such covered representative will be due by April 30, 2020.
- The Revised Professional fee will be fully phased-in during MSRB fiscal year 2021,[6] with municipal advisors being assessed $1,000 for each covered representative as of January 31 of that fiscal year. The payment of $1,000 per such covered representative will be due by April 30 of that fiscal year.

The MSRB has designated the proposed rule change for immediate effectiveness.

The text of the proposed rule change is available on the MSRB's website at *www.msrb.org/Rules-and-Interpretations/SEC-Filings/2019-Filings.aspx,* at the MSRB's principal office, and at the Commission's Public Reference Room.

II. Self-Regulatory Organization's Statement of the Purpose of, and Statutory Basis for, the Proposed Rule Change

In its filing with the Commission, the MSRB included statements concerning the purpose of and basis for the proposed rule change and discussed any comments it received on the proposed rule change. The text of these statements may be examined at the places specified in Item IV below. The MSRB has prepared summaries, set forth in Sections A, B, and C below, of the most significant aspects of such statements.

A. Self-Regulatory Organization's Statement of the Purpose of, and Statutory Basis for, the Proposed Rule Change

1. Purpose

The purpose of the proposed rule change is to adjust the annual municipal advisor professional fee assessed on municipal advisor firms to better defray the costs and expenses of operating and administering the MSRB. In the Dodd-Frank Wall Street Reform and Consumer Protection Act of 2010 (the ''Dodd-Frank Act''),[7] Congress charged the Commission and the MSRB with the regulation of municipal advisors and, at the same time, granted the MSRB authority to charge municipal advisors ''reasonable fees and charges'' to defray the overall ''costs and expenses of operating and administering the Board.'' [8] Since the passage of the Dodd-Frank Act, the MSRB has exercised this statutory authority to implement a comprehensive regulatory framework for municipal advisors.[9] In furtherance of this framework, the MSRB adopted

[1] 15 U.S.C. 78s(b)(1).

[2] 17 CFR 240.19b–4.

[3] ''Form MA–I: Information Regarding Natural Persons Who Engage in Municipal Advisory Activities,'' is an SEC form that must be completed and filed by a municipal advisor firm with respect to each natural person associated with the firm and engaged in municipal advisory activities on the firm's behalf, including employees of the firm. Independent contractors are included in the definition of ''employee'' for these purposes. The same form is also used to amend a previously submitted Form MA–I. A natural person doing business as a sole proprietor must complete and file Form MA–I in addition to Form MA. *See* ''Instructions for the Form MA Series,'' available at *https://www.sec.gov/about/forms/formmadata.pdf.*

[4] Consistent with the Board's prohibition on charging or otherwise passing through MSRB fees to issuers, municipal advisors are prohibited from charging or otherwise passing through any fees required under Rule A–11 to their issuer clients. *See* Release No. 34–81841 (October 10, 2017), 82 FR 48135, at note 9 and corresponding discussion (October 16, 2017) (File No. SR–MSRB–2017–07) (Notice of Filing and Immediate Effectiveness of a Proposed Rule Change to MSRB Rule A–11, on Assessments for Municipal Advisor Professionals, To Amend the Annual Municipal Advisor Professional Fee).

[5] The MSRB's fiscal year 2020 commences on October 1, 2019 and concludes on September 30, 2020.

[6] The MSRB's fiscal year 2021 commences on October 1, 2020 and concludes on September 30, 2021.

[7] Public Law No. 111–203, 124 Stat. 1376 (2010).

[8] *See* 15 U.S.C. 78*o*–4(b)(2)(J).

[9] The MSRB developed professional qualification exams, adopted new rules for municipal advisors, and extended rules to municipal advisors that previously applied only to brokers, dealers and municipal securities dealers (collectively, ''dealers.'') These include, but are not limited to: Rule G–44 regarding the supervisory and compliance obligations of municipal advisors, *see* Release No. 34–73415 (October 23, 2014), 79 FR 64423 (October 29, 2014) (File No. SR–MSRB–2014–06) (SEC order approving Rule G–44); Rule G–42 regarding the duties of non-solicitor municipal advisors, *see* Release No. 34–76753 (December 23, 2015), 80 FR 81614 (December 30, 2015) (File No. SR–MSRB–2015–03) (SEC order approving Rule G–42); amendments to Rule G–20, on gifts, gratuities and non-cash compensation, to extend provisions of the rule to municipal advisors, *see* Release No. 34–76381 (November 6, 2015), 80 FR 70271 (November 13, 2015) (File No. SR–MSRB–2015–09) (SEC order approving amendments to Rule G–20); amendments to Rule G–37, on political contributions and prohibitions on municipal securities business, to extend its provisions to municipal advisors, *see* Release No. 34–76763 (December 23, 2015), 80 FR 81710 (December 30, 2015) (File No. SR–MSRB–2015–14) (notice of filing of proposed amendments to Rule G–37); and amendments to Rule G–3 to establish registration and professional qualification requirements for municipal advisors, *see* Release No. 34–74384 (February 26, 2015), 80 FR 11706 (March 4, 2015) (File No. SR–MSRB–2014–08) (SEC order approving registration and professional qualification requirements for municipal advisor representatives and municipal advisor principals).

Rule A–11 to begin to defray a portion of the costs and expenses associated with its regulation of municipal advisors.

While the MSRB has expended significant resources in developing a regulatory framework for municipal advisory activities, the Board has previously deferred raising municipal advisor fees to more equitably defray the expenses associated with this activity in order to allow municipal advisors additional time to adapt to the regulations.[10] As more fully discussed below,[11] the MSRB's fee structure remains predominantly dependent on dealer fees, particularly market activity fees paid exclusively by dealers. Although the organization does offset some portion of its costs and expenses through its fees on municipal advisors, the Board believes that its present fee structure does not appropriately allocate the costs of operating the MSRB between dealers and municipal advisors (collectively, ''regulated entities''). The Board has determined that the Revised Professional Fee will result in a fairer and more equitable fee structure when compared to the current distribution of fees.

The purpose of the proposed rule change is to continue rebalancing this dealer-fee concentration by phasing-in an increase to the municipal advisor professional fee under Rule A–11 over the next two years. The Board believes that the Revised Professional Fee is necessary and appropriate to achieve (1) a more equitable allocation of fees among its regulated entities and (2) a fairer distribution of the total expenses of its regulatory activities, systems development, and other operational activities. Moreover, by incrementally increasing the fee contribution of municipal advisors, the proposed rule change will advance the Board's goal of developing a sustainable financial model that will enable the MSRB to year-over-year fulfill its statutory mandate and meet the unique responsibilities of being the self-regulatory organization for the municipal securities market.

The Board's Statutory Mandate

The MSRB's statutory mandate under the Exchange Act encompasses the protection of investors, state and local government issuers, other municipal entities and obligated persons, and the public interest by promoting a fair and efficient municipal market. The MSRB discharges its statutory mandate through (1) the establishment of rules for dealers and municipal advisors, (2) the collection and dissemination of market information, and (3) other related activities, such as regulatory coordination, compliance support, the development of professional qualifications programs, education, and outreach.[12]

The Board's Comprehensive Regulatory Framework for Municipal Advisors

In accordance with its statutory mandate under the Exchange Act, the MSRB has established a comprehensive regulatory framework for the regulation of municipal advisors. This framework includes the development, implementation, and maintenance of (1) a set of rules governing the activities of municipal advisors,[13] (2) municipal advisor recordkeeping requirements,[14] (3) municipal advisory client education and protection provisions,[15] and (4) professional standards meant to ensure that all municipal advisor professionals have a baseline knowledge of federal securities laws, rules, and regulations.[16] As part of this latter category of activities, the MSRB has established the Municipal Advisor Representative Qualification Examination (the ''Series 50 Exam'')[17] and is finalizing the Municipal Advisor Principal Qualification Examination (the ''Series 54 Exam'').[18]

The MSRB has also undertaken considerable efforts to assist municipal advisors in understanding and complying with this regulatory framework. These efforts include the creation of compliance resources, compliance-oriented notices, and similar publications[19] and the development of, and participation in, outreach events and educational webinars.[20]

The Board's Ongoing Fee Review

The Board has set a long-term strategic goal of developing a sustainable financial model that ensures the MSRB will continue to achieve its unique regulatory mission. The Board believes that its financial model must reasonably balance the costs of achieving its mission with appropriate expense management and the fair and equitable allocation of fees from a diversity of funding sources. The Board

[10] *See* MSRB Regulatory Notice 2017–20 (September 29, 2017) (describing how the MSRB reconsidered the amount of the municipal advisor professional fee, ''but determined not to increase it at that time in order to allow municipal advisors additional time to adapt to regulation'' and stating that the ''MSRB will continue to review and evaluate its fees over time to ensure that fees are allocated fairly and equitably across all regulated entities.'').

[11] *See* related discussion under *The Board's Current Revenue Sources infra.*

[12] *See* Section 15B(b)(2) of the Act (15 U.S.C. 78*o*–4(b)(2)) (in relevant part, requiring the Board to propose and adopt rules that ''at a minimum'' meet a baseline of statutory mandates, including the adoption of rules with respect to municipal advisors that ''prescribe means reasonably designed to prevent acts, practices, and courses of business as are not consistent with a municipal advisor's fiduciary duty to its clients''); Section 15B(b)(3) of the Act (15 U.S.C. 78*o*–4(b)(3)) (permitting the Board to establish information systems); Section 15B(b)(4) of the Act (15 U.S.C. 78*o*–4(b)(4)) (permitting the Board to provide guidance and assistance in the enforcement of, examination for, compliance with the rules of the Board); and MSRB Rule A–2 (''Subject to the provisions of the Act and the rules and regulations of the Commission thereunder, and other applicable law, the Board shall have the power to determine all matters relating to the operation and administration of the Board and to exercise all other rights and powers granted by the Act and other applicable law to the Board.'').

[13] *See* Rule G–17, on conduct of municipal securities and municipal advisory activities; Rule G–20, on gifts gratuities, non-cash compensation and expenses of issuance; Rule G–37, on political contributions and prohibitions on municipal securities business and municipal advisory business; Rule G–40, on advertising by municipal advisors; Rule G–42, on duties of non-solicitor municipal advisors; Rule G–44, on supervisory and compliance obligations of municipal advisors, each respectively, available at *http://msrb.org/Rules-and-Interpretations/MSRB-Rules.aspx.*

[14] *See* Rule G–8, on books and records to be made by brokers, dealers, and municipal securities dealers and municipal advisors, available at *http://msrb.org/Rules-and-Interpretations/MSRB-Rules.aspx.*

[15] *See* Rule G–10, on investor and municipal advisory client education and protection, available at *http://msrb.org/Rules-and-Interpretations/MSRB-Rules.aspx.*

[16] *See* Rule G–2, on standards of professional qualification; and Rule G–3, on professional qualification requirements, respectively, available at *http://msrb.org/Rules-and-Interpretations/MSRB-Rules.aspx.*

[17] *See* Release No. 34–74384 (February 26, 2015), 80 FR 11706 (March 4, 2015) (File No. SR–MSRB–2014–08).

[18] *See* Release No. 34–84630 (November 20, 2018), 83 FR 60927 (November 27, 2018) (File No. SR–MSRB–2018–07).

[19] For example, the MSRB supports regulatory compliance by municipal advisors by providing resources about MSRB requirements, as well as more general educational material. Municipal advisors may access these resources and others, including the Municipal Advisor Review, the MSRB's quarterly newsletter for municipal advisors at *http://www.msrb.org/Regulated-Entities/Resources.aspx.* In addition, the MSRB has published several regulatory notices for municipal advisors to help keep market participants informed of regulatory changes and to provide guidance on the application of existing rules. *See, e.g.,* MSRB Notice 2017–08, Application of MSRB Rules to Solicitor Municipal Advisors (May 4, 2017); MSRB Notice 2017–13, MSRB Provides Guidance on Duties of Non-Solicitor Municipal Advisors in Conduit Financing Scenarios (July 13, 2017).

[20] For example, the MSRB provides free education and training webinars on municipal market topics, regulatory and compliance issues, and the use of MSRB market transparency systems. Municipal advisors may register for new webinars and access on-demand webinars, including some webinars that provide CPE credit at *http://www.msrb.org/Regulated-Entities/Webinars.aspx.*

routinely examines revenues and expenses in the normal course of its prudent fiscal management in continuous pursuit of fairness and equity in the revenue framework and to ensure expenses are appropriately calibrated. Recognizing that in any given year there could be more or less activity by a particular class of regulated entities, the Board, as it has historically, seeks to maintain a fee structure that results in a balanced and reasonable contribution, over time, from all regulated entities. Revenues are managed through new fees,[21] fee increases, deficit budgets funded by excess reserves,[22] revisions to pricing for propriety products, and other activities. The Board monitors its funding to determine whether the respective sources are contributing appropriately in light of the MSRB's statutory mandate and unique responsibilities in the municipal securities market.

Based on its ongoing fee review, and, in light of the current concentration in revenue sources discussed immediately below, the MSRB believes that its current fee structure should be revised to strive for greater fairness in its allocation of expenses and costs among its regulated entities and, thereby, promote less concentration in certain of its revenue sources.

The Board's Current Fee Structure

The MSRB assesses regulated entities various fees designed to defray the costs of its operations and administration. Section 15B(b)(2)(J) of the Act[23] provides, in pertinent part, that each regulated entity shall pay to the Board such reasonable fees and charges as may be necessary or appropriate to defray the costs of operating and administering the Board and that the MSRB shall have rules specifying the amount of such fees. The current fees are:

1. Municipal advisor professional fee (Rule A–11)
   $500 for each covered representative as of January 31 of each year, as further described herein;
2. Initial registration fee (Rule A–12)
   $1,000 one-time registration fee to be paid by each dealer to register with the MSRB before engaging in municipal securities activities and by each municipal advisor to register with the MSRB before engaging in municipal advisory activities;
3. Annual registration fee (Rule A–12)
   $1,000 annual fee to be paid by each dealer and municipal advisor registered with the MSRB;
4. Late fee (Rules A–11 and A–12)
   $25 monthly late fee and a late fee on overdue balances computed according to the prime rate until such balance is paid;[24]
5. Underwriting fee (Rule A–13)[25]
   $.0275 per $1,000 of the par value paid by a dealer, on all municipal securities purchased from an issuer by or through such dealer, whether acting as principal or agent as part of a primary offering, except in limited circumstances; and in the case of an underwriter of a primary offering of certain municipal fund securities (as defined in Rule G–45), $.005 per $1,000 of the total aggregate assets for the reporting period (*i.e.,* the 529 savings plan fee on underwriters);[26]
6. Transaction fee (Rule A–13)[27]
   .001% ($.01 per $1,000) of the total par value to be paid by a dealer, except in limited circumstances, for inter-dealer sales and customer sales reported to the MSRB pursuant to Rule G–14(b), on transaction reporting requirements;
7. Technology fee (Rule A–13)[28]
   $1.00 paid by a dealer per transaction for each inter-dealer sale and for each sale to customers reported to the MSRB pursuant to Rule G–14(b); and
8. Professional qualification examination fee (Rule A–16)
   $150 test development fee assessed per candidate for each MSRB professional qualification examination.

As discussed in the following section, the MSRB's present fee structure leads to a concentration of fee revenue paid by dealer firms and, thereby, creates certain revenue dependencies.

The Board's Current Revenue Sources

The MSRB funds its operations primarily by assessing fees on regulated entities, but also generates a small percentage of its revenue from other sources, like the sale of certain proprietary data subscription services.[29] The vast majority of the MSRB's revenue is generated from dealer-paid market activity fees, namely transaction fees, underwriting fees, and technology fees. Although the organization's revenue sources have become marginally more diversified since the initial enactment of the Dodd-Frank Act—when market activity fees accounted for 90% or more of the Board's annual revenue in certain fiscal years—dealer fees still accounted for more than 80% of revenue in fiscal year 2018. Absent further action, this desired shift towards more equitable fee allocations may not continue under the existing revenue framework, so the Board is evaluating changes to its fee structure that will further alleviate the

[21] As an example, the MSRB introduced a new fee on underwriters of 529 savings plans in 2018. Prior to this fee, underwriters of 529 savings plans had not paid a fee in this capacity since the MSRB began regulating such underwriters in 1999. *See* Release No. 34–81264 (July 31, 2017), 82 FR 36472 (August 4, 2017) (File No. SR–MSRB–2017–05).

[22] As an example, the MSRB is generating a deficit budget for this fiscal year 2019 and utilizing a portion of its excess reserves by temporarily reducing the rate of assessment for the MSRB's underwriting, transaction, and technology fees for dealers under Rule A–13 with respect to assessible activity occurring from April 1, 2019 through September 30, 2019. *See* Release No. 34–85400 (March 22, 2019), 84 FR 11841 (March 28, 2019) (''Temporary Reduction Release'').

[23] 15 U.S.C. 78*o*–4(b)(2)(J).

[24] Consistent with Rule A–11(b), a municipal advisor firm is only required to pay one $25 monthly late fee (regardless of the number of its covered representative(s) for which the per professional fee was not timely paid) if it fails timely to pay in full the total fee due under Rule A–11(a). This late fee is in addition to a late fee on the total overdue balance based on the Prime Rate.

[25] The MSRB temporarily reduced the rate of assessment for the MSRB's underwriting fees for activity that occurs from April 1, 2019 through and including September 30, 2019 to .00185% ($0.0185 per $1,000) of the applicable par value. *See* Rule A–13(h)(i). The temporary fee reduction is targeted at this fee, the transaction fee, and the technology fee in acknowledgment that these three fees ''contributed to the excess reserve position'' as compared to the MSRB's other fees. *See* Temporary Reduction Release, *supra* note 23, 84 FR at 11842 (March 28, 2019).

[26] As of May 2018, the Board invoices underwriters of a primary offering of certain municipal fund securities for the assessments due. *See* Release No. 34–81264 (July 31, 2017), 82 FR 36472 (August 4, 2017) (File No. SR–MSRB–2017–05) (Notice of Filing and Immediate Effectiveness of a Proposed Rule Change to Assess an Underwriting Fee on Dealers That Are Underwriters of Primary Offerings of Plans).

[27] The MSRB temporarily reduced the rate of assessment for the MSRB's transaction fees for activity that occurs from April 1, 2019 through and including September 30, 2019 to .00067% ($0.0067 per $1,000) of the applicable par value. *See* Rule A–13(h)(ii). The temporary fee reduction is targeted at this fee, the underwriting fee, and the technology fee in acknowledgment that these three fees ''contributed to the excess reserve position'' as compared to the MSRB's other fees. *See* Temporary Reduction Release, *supra* note 23, 84 FR at 11842 (March 28, 2019).

[28] The MSRB temporarily reduced the rate of assessment for the MSRB's technology fees for activity that occurs from April 1, 2019 through and including September 30, 2019 to $0.67 per transaction. *See* Rule A–13(h)(iii). The temporary fee reduction is targeted at this fee, the underwriting fee, and the transaction fee in acknowledgment that these three fees ''contributed to the excess reserve position'' as compared to the MSRB's other fees. *See* Temporary Reduction Release, *supra* note 23, 84 FR at 11842 (March 28, 2019).

[29] The MSRB charges data subscription service fees for subscribers, who include dealers, municipal advisors, and entities not regulated by the MSRB, seeking direct electronic delivery of municipal trade data and disclosure documents associated with municipal bond issues.

MSRB's concentrated dependency on dealer-paid revenue sources.

More specifically, market activity fees consistently comprise the majority of MSRB-revenue. The Board has determined that it must evaluate its other revenue sources, particularly to determine whether non-dealer fee changes may be enacted to strike a more sustainable and fairer balance of funding. The proposed rule change partially addresses this issue by increasing the total fee contribution of municipal advisor firms and, thereby, growing the MSRB's revenue base away from the strong dependency on dealer-paid market activity fees and more fairly and equitably allocating the costs associated with the organization's regulation of municipal advisors.

While the Board seeks to increase the aggregate fee contribution paid by municipal advisors as compared to dealers, it also seeks a fee increase that is equitable among all registered municipal advisor firms and does not place an undue fee burden on small firms. Of the approximately 500 municipal advisor firms registered with the MSRB in fiscal year 2018, a small minority of firms paid $10,000 or more in total annual municipal advisor professional fees, while the vast majority of firms paid no more than $2,500.[30] By assessing the fees on a per professional basis, the Board believes the fee increase is allocated fairly across the universe of municipal advisor firms.

In this regard, the Board considered a range of alternative fee modifications before deciding on the proposed rule change, including, among others, the collection of additional data to enable the assessment of fees based on a firm's overall market activity, as well as fees based on new issue par volume analogous to the dealer underwriting fee. However, the lack of uniformity in the services provided by municipal advisor firms [31] and the potential burden of new reporting requirements, particularly on small firms, led the Board, at this time, to elect an increase in the existing municipal advisor professional fee under Rule A–11. The Board believes that the number of covered representatives serves as a reasonable proxy for overall market activity, especially in the absence of other market data, and, thus, the proposed rule change will lead to a fee structure that better reflects a firm's overall municipal advisory activities by increasing the total proportion of fees paid by larger firms with more covered representatives. The proposed rule change is expected to result in the increased total aggregate contribution of all municipal advisor firms and, particularly, the total fees paid by larger firms.

The Board's Annual Municipal Advisor Professional Fee

The MSRB established Rule A–11 in 2014 to help defray the costs and expenses of operating and administering the MSRB, particularly the increased costs as a result of the regulation of municipal advisors.[32] Rule A–11(a) currently provides that each municipal advisor that is registered with the Commission shall pay to the Board a recurring annual fee equal to $500 [33] for each covered representative [34] by April 30th of each year.[35] The annual professional fee under Rule A–11(a) is due by April 30th each year in the manner provided by the MSRB Registration Manual. Rule A–11(b) also provides for late fees on annual professional fees that are not paid in full.

The proposed rule change will provide that each municipal advisor that is registered with the Commission shall pay to the Board an annual fee equal to $750 for each covered representative for the MSRB's fiscal year 2020 and equal to $1,000 for each covered representative for the MSRB's fiscal year 2021 and thereafter.[36] The Board estimates that the proposed rule change will generate approximately $760,000 in additional revenue for fiscal year 2020 and $1.5 million in additional revenue for fiscal year 2021, as compared to current estimates under the present fee structure. In percentage terms, the proposed rule change is expected to result in the municipal advisor professional fee accounting for approximately 5.7% of the MSRB's fiscal year 2020 budgeted revenue and approximately 7.0% of MSRB's fiscal year 2021 budgeted revenue, up from 3.9% and 3.6%, respectively, under projections absent the proposed rule change. Specific to the allocation of fees among municipal advisors, the MSRB estimates that the vast majority of municipal advisor firms will have an incremental increase above current fee rates of between $250 and $1,250 in fiscal year 2020 and between $500 and $2,500 in fiscal year 2021. The forecasted median increase for municipal advisor firms will be $500 in fiscal year 2020 and $1,000 in fiscal year 2021. Accordingly, the Board believes the proposed increases will not impose an undue fee burden on small firms.

Conclusion

The Board believes that the proposed rule change is reasonable as well as necessary and appropriate to help defray the expenses and costs of

[30] Based on internal data, the MSRB calculates that 24 firms, or about 5% of firms registered in fiscal year 2018, fell into this highest tier of annual municipal advisor professional fee payments, while 401 firms, or about 80% of then-registered firms, fell into this lowest tier of these fee payments.

[31] For example, the MSRB understands that some municipal advisor firms may focus solely on providing advice to clients about swap activities and, thus, a municipal advisor fee analogous to the dealer underwriting fee based on new issue par volume would not affect such a firm, regardless of whether the firm was very active or inactive in the market. Similarly, the MSRB understands that municipal advisors can have varying compensation structures, such as hourly rates, per-transaction fees, and/or project-based compensation. MSRB fees that did not adequately account for this variation could lead to inequitable payment outcomes or other market distortions.

[32] *See* Release No. 34–72019 (April 25, 2014), 79 FR 24798, 24798 (May 1, 2014) (File No. SR–MSRB–2014–03) (Notice of Filing and Immediate Effectiveness of a Proposed Rule Change Consisting of New Rule A–11, on Assessments for Municipal Advisor Professionals); *see also* MSRB Notice 2014–09, MSRB to Implement New MSRB Rule A–11 Establishing Fees for Municipal Advisor Professionals (April 17, 2014).

[33] As first adopted in 2014, Rule A–11 required payment to the Board of an annual fee equal to $300 for each covered representative. *Id.* The MSRB amended Rule A–11 in 2017 to increase this fee from $300 to $500 for each covered representative and made other technical changes. *See* Release No. 34–81841 (October 10, 2017), 82 FR 48135 (October 16, 2017) (File No. SR–MSRB–2017–07) (Notice of Filing and Immediate Effectiveness of a Proposed Rule Change Consisting to MSRB Rule A–11, on Assessments for Municipal Advisor Professionals, To Amend the Annual Municipal Advisor Professional Fee).

[34] As previously defined above, the term ''covered representative'' for purposes of this filing means each person associated with the municipal advisor who is qualified as a municipal advisor representative in accordance with Rule G–3 and for whom the municipal advisor has on file with the Commission a Form MA–I as of January 31 of each year.

[35] A person is qualified as a municipal advisor representative in accordance with Rule G–3(d) when such person has taken and passed the Series 50 Exam. As of September 12, 2017, only an associated person of a municipal advisor firm who has passed the Series 50 Exam may engage in municipal advisory activities on behalf of the municipal advisor firm. Additionally, municipal advisor principals must likewise qualify as a municipal advisor representative by passing the Series 50 Exam. *See* MSRB Notice 2017–09, MSRB Reminds Municipal Advisors that the Series 50 Exam Deadline is September 12, 2017 (May 8, 2017). Because, pursuant to Rule G–3, all municipal advisor principals must also qualify by examination as a municipal advisor representative, the proposed fee increase will equally apply to municipal advisor principals.

[36] While the MSRB has designated the proposed rule change for immediate effectiveness, by its terms, the assessment of the amended annual professional fees for each covered representative will be based on the number of covered representatives as of January 31 of each respective fiscal year. The MSRB intends to send the first invoice of the applicable fee level (measured as of January 31 for each year) to firms on or about the beginning of April each year for payment by April 30.

operating and administering the MSRB. It is an important step towards the Board's strategic goal of promoting the organization's long-term financial stability. The Board believes the proposed fee increases will help the organization provide for assessments that are more fairly and equitably apportioned among all MSRB regulated entities by further diversifying the MSRB's revenue base away from its strong dependency on dealer-paid market activity fees.

2. Statutory Basis

The MSRB believes that the proposed rule change is consistent with Section 15B(b)(2)(J) of the Act,[37] which states that the MSRB's rules shall:

> . . . provide that each municipal securities broker, municipal securities dealer, and municipal advisor shall pay to the Board such reasonable fees and charges as may be necessary or appropriate to defray the costs and expenses of operating and administering the Board. Such rules shall specify the amount of such fees and charges, which may include charges for failure to submit to the Board, or to any information system operated by the Board, within the prescribed timeframes, any items of information or documents required to be submitted under any rule issued by the Board.

The MSRB believes that the proposed rule change is necessary and appropriate to fund the operation and administration of the Board and satisfies the requirements of Section 15B(b)(2)(J).[38] The MSRB believes the proposed rule change is necessary and appropriate because it will help defray the costs of the Board's rulemaking, compliance support, professional qualifications programs, and other activities relating to municipal advisors.

As discussed above, the MSRB has engaged in significant rulemaking to put into place a regulatory framework for municipal advisors and has engaged in considerable activities to assist municipal advisors in understanding their obligations and complying with the applicable rules. Because the MSRB does not have authority to examine or enforce its rules, the MSRB coordinates closely with the regulatory authorities responsible for such examination and enforcement, including by making market statistics, analytical data, and other municipal securities information available in support of their examination and enforcement activities and providing training regarding the municipal market and MSRB rules. The MSRB expects to continue its many activities relating to the municipal securities market, including the regulation of municipal advisors, with a continued focus on providing resources that enhance the understanding of MSRB rules and improve compliance therewith.

The proposed rule change will assist in defraying some of the costs and expenses associated with these activities and will help ensure the MSRB is funding these regulatory activities in a financially responsible way. However, even with the proposed rule change's fee increase, the Revised Professional Fee will only defray a small portion of the costs and expenses of operating and administering the MSRB—generating an estimated 5.7% of fiscal year 2020 budgeted revenue and 7.0% of fiscal year 2021 budgeted revenue.[39] Thus, the Board believes the proposed rule change is necessary and appropriate because it is a measured, incremental approach that moves towards a more equitable balance of fees among regulated entities and a fairer allocation of the expenses of the regulatory activities, systems development, and operational activities undertaken by the organization, while not overly burdening municipal advisors with more accelerated fee increases at this time.

B. Self-Regulatory Organization's Statement on Burden on Competition

The Board has conducted an analysis on the proposed rule change to gauge its overall economic impact and assess its burden on competition.[40] For the reasons discussed below, the Board has determined that the proposed rule change will not impose any burden on competition that is not necessary or appropriate in furtherance of the purposes of the Exchange Act, nor will it impose any unnecessary or inappropriate regulatory burden on small municipal advisors.

The Board's Determinations Regarding the Proposed Rule Change's Burden on Competition

Section 15B(b)(2)(C)[41] of the Exchange Act provides that MSRB rules shall ''not be designed . . . to impose any burden on competition not necessary or appropriate in furtherance of the purposes of this title.'' The Board believes the proposed rule change is consistent with Section 15B(b)(2)(C),[42] because the proposed rule change is necessary and appropriate to ensure that municipal advisors more equitably contribute to defraying the costs and expenses of operating and administering the MSRB. The Board also believes that the proposed rule change does not result in any burden on competition that is not necessary or appropriate, principally because the fee applies equally to all municipal advisors based on the number of covered representatives at each municipal advisor firm.

- The Board's Analysis of the Existing Fee Structure and the Necessity of the Revised Professional Fee

The goal of the proposed rule change is to diversify the MSRB's revenue base away from its strong dependency on dealer-paid market activity fees and to more fairly align the aggregate amount of fees paid by a given class of regulated entities with the overall costs of the MSRB's regulatory activities associated with those entities and the overall costs of the organization. When the Board analyzed the aggregate amount of fees paid by dealers against the aggregate amount of fees paid by municipal advisors, the Board determined that the fees historically paid, and forecasted to be paid, by municipal advisors are out of proportion to the overall costs and expenses of operating and administering the Board. Similarly, when it analyzed its expenses, the Board determined that the amounts paid by municipal advisors under the current fee structure have not, and are not projected to, fully defray the costs and expenses associated with the MSRB's comprehensive regulatory framework for municipal advisors.

The Board came to these determinations based in part on the fact

[37] 15 U.S.C. 78*o*–4(b)(2)(J).

[38] *Id.*

[39] The Board does not believe that it is necessary to strictly allocate its fees among regulated entities based upon the proportion of the MSRB's activities devoted to that class of regulated entity (*i.e.,* dealers versus municipal advisors). *See, e.g.,* Release No. 34–63621 (December 29, 2011), 76 FR 604, at 606–607 (January 5, 2011) (File No. SR–MSRB–2010–10) (summarizing the MSRB's response to comments from dealers desiring the increase of municipal advisor fees to an amount that covers the ''entire cost of their own regulation''). Section 15B(b)(2)(J) (15 U.S.C. 78*o*–4(b)(2)(J)) grants the Board discretion to provide for the payment of ''such reasonable fees and charges as may be *necessary or appropriate* to defray the costs and expenses of *operating and administering the Board*'' (emphasis added). Regardless of the Board's statutory authority to collect payments from municipal advisors to fund its overall operation and administration, the Board has determined that the percentages stated above are far less than the proportion of the MSRB's activities that are related to municipal advisors and the historical costs associated with such activities.

[40] The scope of the Board's policy on the use of economic analysis generally excludes proposed rule changes that are qualified to be filed as immediately effective. *See* Policy on the Use of Economic Analysis in MSRB Rulemaking, at *http://msrb.org/Rules-and-Interpretations/Economic-Analysis-Policy.aspx*. Despite this exclusion, the MSRB typically conducts such an analysis on those rule changes for which the MSRB seeks immediate effectiveness. Such analyses primarily focus on the burden of competition on regulated entities for those immediately effective rule changes. Consistent with its prior proposed rule changes, the Board conducted the analysis described herein.

[41] 15 U.S.C. 78*o*–4(b)(2)(C).

[42] *Id.*

that the vast majority of the MSRB's revenue is generated from dealer firms, particularly market activity fees paid exclusively by dealers. Fiscal year 2018 revenue is generally representative of this fee concentration. Dealer market activity fees paid pursuant to Rule A–13 amounted to about 80% of revenue in fiscal year 2018. Registration fees paid by dealers pursuant to Rule A–12 amounted to approximately 3.3% in additional revenue for that fiscal year. By comparison, the aggregate amount of registration fees paid by municipal advisors pursuant to Rule A–12 totaled about 1.2% of revenue and annual professional fees paid by municipal advisors pursuant to Rule A–11 totaled about 3.8%, respectively, in the same period. In sum, municipal advisors paid a total of approximately 5.0% of the MSRB's aggregate revenue in fiscal year 2018.

The Board has determined that the proportion of revenue generated by fees from municipal advisors is significantly below the costs of MSRB activities related to municipal advisors.[43] As a result, the proportion of the MSRB operations funded by contributions from dealers is above the costs of MSRB activities related to dealers, and some portion of dealer-paid fees are effectively subsidizing the MSRB's regulatory activities associated with municipal advisors. The Board believes the Revised Professional Fee is necessary and appropriate to ensure that municipal advisors more equitably contribute to defraying the costs and expenses of operating and administering the MSRB.

• The Board's Determinations Regarding the Revenue Impacts of the Revised Professional Fee

The proposed rule change will be implemented in two phases—first, from the current level of $500 to $750 in MSRB fiscal year 2020, and, then, to $1,000 in MSRB fiscal year 2021 and thereafter. With these incremental increases, the Revised Professional Fee will account for an estimated 5.7% of MSRB's total revenue in fiscal year 2020 and an estimated 7.0% of total revenue in fiscal year 2021. Nonetheless, the MSRB believes that even after the Revised Professional Fee has been implemented, the fee revenue paid by municipal advisors will not fully defray the costs and expenses of their comprehensive regulatory framework and the proportionate costs associated with operating the organization.[44] The Board has determined that the Revised Professional Fee will result in a fairer and more equitable fee structure when compared to this current distribution of fees.

While further increases may be necessary and appropriate in the future, the Board has determined that an incremental, phase-in approach is superior to possible alternatives, particularly less incremental alternatives that would not allow municipal advisors the same amount of time to adjust to the increased amount of the Revised Professional Fee. Among other benefits, the incremental approach of the proposed rule change will give a municipal advisor firm a period to implement the Revised Professional Fee. This incremental approach will also have the ancillary benefit of providing the Board additional time to calibrate the costs of MSRB operations and evaluate possible fee alternatives. Accordingly, the Board believes the phase-in of the Revised Professional Fee over the following two years is appropriate to establish a transitional period for the increased fee.

• Other Precedents for SRO Fee Assessments Based on Firm Size

Lastly, the MSRB notes that other self-regulatory organizations and independent oversight and rulemaking boards, such as the Financial Industry Regulatory Authority (''FINRA''), the Public Company Accounting Oversight Board (''PCAOB''), National Futures Association (''NFA'') and the Financial Accounting Standards Board (''FASB''), all have some annual fee assessment structure that is based on the size of firms under regulation. For example, FINRA's annual registration fee and new member application fee assessments for broker-dealers are based on the number of branch offices and the number of registered persons; the PCAOB's annual fee assessment is based on the number of issuer audit clients and the number of personnel within each public accounting firm; NFA's annual member dues for swap dealers and Forex dealers are based on the tier size of member firms; and FASB's accounting support fees are allocated based on the average market capitalization of each issuer. The Board believes the Revised Professional Fee is similar to these other SRO annual fees, where the number of covered representatives is a reasonable proxy for firm size, and so analogously consistent and appropriate under the Act.

The Board's Determinations Regarding Small Municipal Advisors

Section 15B(b)(2)(L)(iv) of the Act[45] provides that MSRB rules ''not impose a regulatory burden on small municipal advisors that is not necessary or appropriate in the public interest and for the protection of investors, municipal entities, and obligated persons, provided that there is robust protection of investors against fraud.'' The Board believes that the Revised Professional Fee is consistent with this provision of the Act, because it will not impose an unnecessary or inappropriate regulatory burden on small municipal advisors.

As is the case today, the total amount of the assessment payable by each municipal advisor will be dependent on the number of covered representatives employed by the firm and, therefore, will result in lower assessments for smaller firms with less covered representatives.[46] In this way, each firm's annual professional fee will bear a reasonable relationship to the level of regulated municipal advisory activities that are undertaken by the firm, in that the MSRB believes that firms with more covered representatives generally will engage in more regulated municipal advisory activities. As illustrated in Table 1 below, a firm with 50 professionals currently pays about 17 times as much in total fees as a firm with only a single professional. Under the Revised Professional Fee, however, the same firm with 50 professionals will pay over 25 times as much in total fees as the firm with one professional.

[43] Despite the fee increase of the proposed rule change, the Board has determined that revenues generated by the Revised Professional Fee will continue to be below these costs going forward. Expenses associated with market regulation and professional qualifications amounted to more than $6,400,000 in fiscal year 2018. Limiting the attribution of expenses solely to these activities, and excluding any expenses attributable to other activities that municipal advisors benefit from or are impacted by—such as outreach and education; administration of the board of directors; executive, financial, and risk management; and market structure, transparency, and operations—the revenue generated from the annual municipal advisor professional fee offsets less than 25% of the MSRB's market regulation and professional qualification expenses. The Board, however, declines to more steeply increase fees on municipal advisors in this proposed rule change for the reasons stated in this section, including because of the Board's determination that an incremental increase of an existing municipal advisor fee is superior to possible alternatives at this time.

[44] *Id.*

[45] 15 U.S.C. 78*o*–4(b)(2)(L)(iv).

[46] The MSRB understands that the Form MA–I should be withdrawn for any person who fails to qualify as a municipal advisor representative in accordance with Rule G–3. *See* Registration of Municipal Advisors Frequently Asked Questions, at Question 16.1, available at *https://www.sec.gov/info/municipal/mun-advisors-faqs.shtml.*

Table 1

		Current Fees			Proposed Fees for Fiscal Year 2021		
	Number of Municipal Advisors	Annual Fee (Per Firm)	Per Professional Fee	Total Fee	Annual Fee (Per Firm)	Per Professional Fee	Total Fee
Firm 1	1	$ 1,000	$ 500	$ 1,500	$ 1,000	$ 1,000	$ 2,000
Firm 2	50	$ 1,000	$ 25,000	$ 26,000	$ 1,000	$ 50,000	$ 51,000
Ratio of Firm 2 to Firm 1				17.3			25.5

The Board's Analysis of Alternatives to the Revised Professional Fee

The Board considered a number of alternatives to the Revised Professional Fee. For example, the Board considered assessing a fee specifically tailored to the amount of regulated advisory activity each municipal advisory firm undertakes. The Board believed that such an approach would be more analogous to the market activity fees paid by a dealer, as the underwriting, transaction, and technology fees paid by a dealer firm under Rule A–13 roughly approximate the overall market activity of a dealer firm. However, the fees charged under Rule A–13 are dependent on the data individual dealers firms report to the MSRB about their primary market offerings and secondary market trades. MSRB rules do not currently require a municipal advisor to report analogous information about its activities, and the MSRB does not otherwise collect such information. Although the Board could draft rules requiring the submission of this data, instituting such a requirement would add novel compliance and reporting burdens.[47] Consequently, the Board determined that the Revised Professional Fee was superior at this time to these alternatives.

The Board's Ongoing Analysis of the Revised Professional Fee

Developing a fair and equitable, yet sustainable, financial model is, and will remain, an ongoing focus of the Board, as the organization continues to assess the costs of the MSRB's activities against the impacts and benefits its activities have on various stakeholders. The Board will continue to analyze the impact of the Revised Professional Fee, in the context of its overall fee structure, to inform future budgeting decisions and develop a more optimal allocation of revenues in the future. This analysis will necessarily focus on the fee burden of municipal advisors in particular, but also any broader impact the Revised Professional Fee may have on the municipal securities market.

C. Self-Regulatory Organization's Statement on Comments on the Proposed Rule Change Received From Members, Participants, or Others

The Board did not solicit comment on the proposed rule change. Therefore, there are no comments on the proposed rule change received from members, participants or others.

III. Date of Effectiveness of the Proposed Rule Change and Timing for Commission Action

The foregoing proposed rule change has become effective pursuant to Section 19(b)(3)(A) of the Act[48] and paragraph (f) of Rule 19b–4 thereunder.[49] At any time within 60 days of the filing of the proposed rule change, the Commission summarily may temporarily suspend such rule change if it appears to the Commission that such action is necessary or appropriate in the public interest, for the protection of investors, or otherwise in furtherance of the purposes of the Act.

IV. Solicitation of Comments

Interested persons are invited to submit written data, views, and arguments concerning the foregoing, including whether the proposed rule change is consistent with the Act. Comments may be submitted by any of the following methods:

Electronic Comments

- Use the Commission's internet comment form (*http://www.sec.gov/rules/sro.shtml*); or
- Send an email to *rule-comments@sec.gov.* Please include File Number SR–MSRB–2019–11 on the subject line.

Paper Comments

- Send paper comments in triplicate to Secretary, Securities and Exchange Commission, 100 F Street NE, Washington, DC 20549.

All submissions should refer to File Number SR–MSRB–2019–11. This file number should be included on the subject line if email is used. To help the Commission process and review your comments more efficiently, please use only one method. The Commission will post all comments on the Commission's internet website (*http://www.sec.gov/rules/sro.shtml*). Copies of the submission, all subsequent amendments, all written statements with respect to the proposed rule change that are filed with the Commission, and all written communications relating to the proposed rule change between the Commission and any person, other than those that may be withheld from the public in accordance with the provisions of 5 U.S.C. 552, will be available for website viewing and printing in the Commission's Public Reference Room, 100 F Street NE, Washington, DC 20549 on official business days between the hours of 10:00 a.m. and 3:00 p.m. Copies of the filing also will be available for inspection and copying at the principal office of the MSRB. All comments received will be posted without change. Persons submitting comments are cautioned that we do not redact or edit personal identifying information from comment submissions. You should submit only information that you wish to make available publicly. All submissions should refer to File Number SR–MSRB–2019–11 and should be submitted on or before October 21, 2019.

[47] In contrast to the reporting requirements of dealer firms under MSRB Rule G–14 and MSRB Rule G–34 that provide important transparency to the market in addition to being a tool for tailoring dealer fee assessments, the Board believes that requiring municipal advisors to report data about their regulatory activities primarily for the purpose of the calculation of fees is a less desirable alternative at this time to the proposed rule change.

[48] 15 U.S.C. 78s(b)(3)(A).

[49] 17 CFR 240.19b–4(f).

For the Commission, pursuant to delegated authority.[50]

Jill M. Peterson,

Assistant Secretary.

[FR Doc. 2019–21100 Filed 9–27–19; 8:45 am]

BILLING CODE 8011–01–P

SECURITIES AND EXCHANGE COMMISSION

[Release No. 34–87073; File No. SR–Phlx–2019–37]

Self-Regulatory Organizations; Nasdaq PHLX LLC; Notice of Filing and Immediate Effectiveness of a Proposed Rule Change Relating to the Pricing of a Technology Infrastructure Migration

September 24, 2019.

Pursuant to Section 19(b)(1) of the Securities Exchange Act of 1934 (''Act''),[1] and Rule 19b–4 thereunder,[2] notice is hereby given that on September 18, 2019, Nasdaq PHLX LLC (''Phlx'' or ''Exchange'') filed with the Securities and Exchange Commission (''Commission'') the proposed rule change as described in Items I, II, and III, below, which Items have been prepared by the Exchange. The Commission is publishing this notice to solicit comments on the proposed rule change from interested persons.

I. Self-Regulatory Organization's Statement of the Terms of Substance of the Proposed Rule Change

The Exchange proposes to amend Phlx pricing at Options 7, Section 9 titled ''Other Member Fees.'' The amendment will describe the pricing with respect to a technology infrastructure migration.

While the changes proposed herein are effective upon filing, the Exchange has designated the amendments become operative on October 1, 2019.

The text of the proposed rule change is available on the Exchange's website at *http://nasdaqphlx.cchwallstreet.com/,* at the principal office of the Exchange, and at the Commission's Public Reference Room.

II. Self-Regulatory Organization's Statement of the Purpose of, and Statutory Basis for, the Proposed Rule Change

In its filing with the Commission, the Exchange included statements concerning the purpose of and basis for the proposed rule change and discussed any comments it received on the proposed rule change. The text of these statements may be examined at the places specified in Item IV below. The Exchange has prepared summaries, set forth in sections A, B, and C below, of the most significant aspects of such statements.

A. Self-Regulatory Organization's Statement of the Purpose of, and Statutory Basis for, the Proposed Rule Change

1. Purpose

The Exchange proposes to amend Phlx pricing at Options 7, Section 9 titled ''Other Member Fees.'' The Exchange previously filed a fee proposal to not assess a fee for duplicative FIX Ports[3] and CTI Ports[4] to new FIX Ports and CTI Ports, during the month of September 2019, in connection with an upcoming technology infrastructure migration.[5] With this rule change, the Exchange proposes to not assess a fee for duplicative FIX Ports and CTI Ports to new FIX Ports and CTI Ports, during the month of October 2019 to allow additional time for the Exchange to migrate its technology.

Description of Migration and Pricing Impact

In connection with this migration, members may request new FIX Ports and CTI Ports during the month of October 2019, which are duplicative of the type and quantity of their current ports, at no additional cost to allow for testing of the new ports and allow for continuous connection to the match engine during the transition period.[6] For example, a Phlx member with 3 FIX Ports and 1 CTI Port on October 1, 2019 could request 3 new FIX Ports and 1 new CTI Port for the month of October 2019 at no additional cost. The Phlx member would be assessed only for the legacy market ports, in this case 3 FIX Ports and 1 CTI Port for the month of October 2019 and would not be assessed for the new ports, which are duplicative of the current ports. A member may acquire any additional legacy ports during the month of October 2019 and would be assessed the charges indicated in the current Pricing Schedule. The migration does not require a member to acquire any additional ports, rather the migration requires a new port to replace any existing ports provided the member desired to maintain the same number of ports.[7] A member desiring to enter orders into Phlx is required to obtain 1 FIX Port. A member may also obtain order and execution ports, such as a CTI Port, to receive clearing messages. The number of additional FIX or order and execution ports obtained by a member is dependent on the member's business needs.

Applicability to and Impact on Members[8]

The proposal is not intended to impose any additional fees on any Phlx members. All members may enter orders on Phlx. As noted above, a Phlx member may enter all orders on Phlx through one FIX Port. The Exchange does not require a Phlx member to obtain more than one FIX Port, however, a member may obtain multiple FIX Ports or a CTI Port to meet its individual business needs. This proposal is intended to permit a Phlx member to migrate its current FIX Ports and CTI Ports at no additional costs during the month of October 2019 to allow for continuous connection to the Exchange. Members would only be assessed a fee for their current FIX Ports and CTI Ports and not be assessed a fee for any new duplicative ports they acquire in connection with the technology

[50] 17 CFR 200.30–3(a)(12).

[1] 15 U.S.C. 78s(b)(1).

[2] 17 CFR 240.19b–4.

[3] Financial Information eXchange or ''FIX'' is an interface that allows members and their Sponsored Customers to connect, send, and receive messages related to orders and auction orders and responses to and from the Exchange. Features include the following: (1) Execution messages; (2) order messages; and (3) risk protection triggers and cancel notifications. *See* Rule 1080(a)(i)(A).

[4] Clearing Trade Interface or ''CTI'' is a real-time clearing trade update message that is sent to a member after an execution has occurred and contains trade details specific to that member. The information includes, among other things, the following: (i) The Clearing Member Trade Agreement or ''CMTA'' or ''OCC'' number; (ii) Exchange badge or house number; (iii) the Exchange internal firm identifier; (iv) an indicator which will distinguish electronic and non-electronically delivered orders; (v) liquidity indicators and transaction type for billing purposes; and (vi) capacity. *See* Rule 1070(b)(1).

[5] *See* Securities and Exchange Act Release No. 86795 (August 28, 2019), 84 FR 46578 (September 4, 2019) (SR–Phlx–2019–30).

[6] Members would contact Market Operations to acquire new duplicative FIX Ports and CTI Ports. *See* Options Technical Update #2019–3.

[7] The migration is 1:1 and therefore would not require a member to acquire new ports, nor would it reduce the number of ports needed to connect.

[8] On May 21, 2019, the SEC Division of Trading and Markets (the ''Division'') issued fee filing guidance titled ''Staff Guidance on SRO Rule Filings Relating to Fees'' (''Guidance''). Within the Guidance, the Division noted, among other things, that the purpose discussion should address ''how the fee may apply differently (*e.g.,* additional cost vs. additional discount) to different types of market participants (*e.g.,* market makers, institutional brokers, retail brokers, vendors, etc.) and different sizes of market participants.'' *See* Guidance (available at *https://www.sec.gov/tm/staff-guidance-sro-rule-filings-fees*). The Guidance also suggests that the purpose discussion should include numerical examples. Where possible, the Exchange is including numerical examples. In addition, the Exchange is providing data to the Commission in support of its arguments herein. The Guidance covers all aspects of a fee filing, which the Exchange has addressed throughout this filing.

infrastructure migration. This proposal is not intended to have a pricing impact.

2. Statutory Basis

The Exchange believes that its proposal is consistent with Section 6(b) of the Act,[9] in general, and furthers the objectives of Sections 6(b)(4) and 6(b)(5) of the Act,[10] in particular, in that it provides for the equitable allocation of reasonable dues, fees and other charges among members and issuers and other persons using any facility, and is not designed to permit unfair discrimination between customers, issuers, brokers, or dealers. The proposal is also consistent with Section 11A of the Act relating to the establishment of the national market system for securities. Moreover, the Exchange believes that its proposal complies with Commission guidance on SRO fee filings that the Commission Staff issued on May 21, 2019.[11]

The Proposal is Reasonable

The Exchange's proposal is reasonable in several respects. As a threshold matter, the Exchange is subject to significant competitive forces in the market for options transaction services that constrain its pricing determinations in that market. The fact that this market is competitive has long been recognized by the courts. In *NetCoalition* v. *Securities and Exchange Commission,* the D.C. Circuit stated as follows: ''[n]o one disputes that competition for order flow is 'fierce.' . . . As the SEC explained, '[i]n the U.S. national market system, buyers and sellers of securities, and the broker-dealers that act as their order-routing agents, have a wide range of choices of where to route orders for execution'; [and] 'no exchange can afford to take its market share percentages for granted' because 'no exchange possesses a monopoly, regulatory or otherwise, in the execution of order flow from broker dealers'. . . .'' [12]

Numerous indicia demonstrate the competitive nature of this market. For example, clear substitutes to the Exchange exist in the market for options transaction services. The Exchange is one of several options venues to which market participants may direct their order flow, and it represents a small percentage of the overall market. The Exchange believes its proposal is reasonable because it will not cause a pricing impact on any Phlx member, rather the proposal is intended to permit Phlx members to migrate their FIX Ports and CTI Ports to new technology at no additional cost during the month of October 2019. This proposal, which offers duplicative ports to members at no cost, will allow members to test and maintain continuous connection to the Exchange during the month of October 2019.

The Proposal Represents an Equitable Allocation and Is Not Unfairly Discriminatory

The Exchange believes its proposal allocates its fees fairly among its market participants. The proposal is equitable and not unfairly discriminatory. All members may enter orders on Phlx. As noted above, a Phlx member may enter all orders on Phlx through one FIX Port. The Exchange does not require a Phlx member to obtain more than one FIX Port, however, a member may obtain multiple FIX Ports or a CTI Port to meet its individual business needs. This proposal is not intended to have a pricing impact to any Phlx member.

B. Self-Regulatory Organization's Statement on Burden on Competition

The Exchange does not believe that the proposed rule change will impose any burden on competition not necessary or appropriate in furtherance of the purposes of the Act.

Inter-Market Competition

The proposal does not impose an undue burden on inter-market competition. This proposal does not amend pricing or functionality. Rather, this technology migration will enable Phlx members to continue to connect to Phlx, as is the case today, for the entry of orders.

Intra-Market Competition

The proposal does not impose an undue burden on intra-market competition. All members may enter orders on Phlx. As noted above, a Phlx member may enter all orders on Phlx through one FIX Port. The Exchange does not require a Phlx member to obtain more than one FIX Port, however, a member may obtain multiple FIX Ports or a CTI Port to meet its individual business needs. This proposal is not intended to have a pricing impact to any Phlx member.

C. Self-Regulatory Organization's Statement on Comments on the Proposed Rule Change Received From Members, Participants, or Others

No written comments were either solicited or received.

III. Date of Effectiveness of the Proposed Rule Change and Timing for Commission Action

The foregoing rule change has become effective pursuant to Section 19(b)(3)(A)(ii) of the Act.[13]

At any time within 60 days of the filing of the proposed rule change, the Commission summarily may temporarily suspend such rule change if it appears to the Commission that such action is: (i) Necessary or appropriate in the public interest; (ii) for the protection of investors; or (iii) otherwise in furtherance of the purposes of the Act. If the Commission takes such action, the Commission shall institute proceedings to determine whether the proposed rule should be approved or disapproved.

IV. Solicitation of Comments

Interested persons are invited to submit written data, views, and arguments concerning the foregoing, including whether the proposed rule change is consistent with the Act. Comments may be submitted by any of the following methods:

Electronic Comments

- Use the Commission's internet comment form (*http://www.sec.gov/rules/sro.shtml*); or
- Send an email to *rule-comments@sec.gov.* Please include File Number SR–Phlx–2019–37 on the subject line.

Paper Comments

- Send paper comments in triplicate to Secretary, Securities and Exchange Commission, 100 F Street NE, Washington, DC 20549–1090.

All submissions should refer to File Number SR–Phlx–2019–37. This file number should be included on the subject line if email is used. To help the Commission process and review your comments more efficiently, please use only one method. The Commission will post all comments on the Commission's internet website (*http://www.sec.gov/rules/sro.shtml*). Copies of the submission, all subsequent amendments, all written statements with respect to the proposed rule change that are filed with the Commission, and all written communications relating to the proposed rule change between the Commission and any person, other than

[9] 15 U.S.C. 78f(b).

[10] 15 U.S.C. 78f(b)(4) and (5).

[11] *See* Guidance, *supra* note 8. Although the Exchange believes that this filing complies with the Guidance, the Exchange does not concede that the standards set forth in the Guidance are consistent with the Exchange Act and reserves its right to challenge those standards through administrative and judicial review, as appropriate.

[12] *NetCoalition* v. *SEC,* 615 F.3d 525, 539 (D.C. Cir. 2010) (quoting Securities Exchange Act Release No. 59039 (December 2, 2008), 73 FR 74770, 74782–83 (December 9, 2008) (SR–NYSEArca–2006–21)).

[13] 15 U.S.C. 78s(b)(3)(A)(ii).

those that may be withheld from the public in accordance with the provisions of 5 U.S.C. 552, will be available for website viewing and printing in the Commission's Public Reference Room, 100 F Street NE, Washington, DC 20549, on official business days between the hours of 10:00 a.m. and 3:00 p.m. Copies of the filing also will be available for inspection and copying at the principal office of the Exchange. All comments received will be posted without change. Persons submitting comments are cautioned that we do not redact or edit personal identifying information from comment submissions. You should submit only information that you wish to make available publicly. All submissions should refer to File Number SR–Phlx–2019–37 and should be submitted on or before October 21, 2019.

For the Commission, by the Division of Trading and Markets, pursuant to delegated authority.[14]

Jill M. Peterson,

Assistant Secretary.

[FR Doc. 2019–21099 Filed 9–27–19; 8:45 am]

BILLING CODE 8011–01–P

[14] 17 CFR 200.30–3(a)(12).

SMALL BUSINESS ADMINISTRATION

Agency Information Collection Activities: Proposed Collection; Comment Request—Evaluation of Fees on SBA's Surety Bond Guarantee Program

AGENCY: U.S. Small Business Administration (SBA).

ACTION: 60-Day **Federal Register** notice and request for comments.

SUMMARY: SBA intends to request approval from the Office of Management and Budget (OMB) for the collection of information described below. The Paperwork Reduction Act (PRA) of 1995 requires federal agencies to publish a notice in the **Federal Register** concerning each proposed collection of information before submission to OMB and to allow 60 days for public comment in response to the notice. This notice complies with that requirement.

DATES: Written comments must be received on or before November 29, 2019.

ADDRESSES: Comments are invited on (a) whether the collection of information is necessary for the agency to properly perform its functions; (b) whether the burden estimates are accurate; (c) whether there are ways to minimize the burden, including through the use of automated techniques or other forms of information technology; and (d) whether there are ways to enhance the quality, utility, and clarity of the information.

Comments may be sent to Terrell Lasane (Lead Program Evaluator), U.S. Small Business Administration, 409 3rd Street SW, Washington, DC 20416. Comments will also be accepted through the Federal eRulemaking Portal. Go to *http://www.regulations.gov,* and follow the online instructions for submitting comments electronically.

All responses to this notice will be summarized and included in the request for OMB approval. All comments will be a matter of public record.

FOR FURTHER INFORMATION CONTACT: Requests for additional information or copies of this information collection should be directed to Terrell Lasane at 202–205–7111.

SUPPLEMENTARY INFORMATION:

Title: Evaluation of Fees on SBA's Surety Bond Guarantee Program.

Form Number: N/A.

OMB Number: Not Yet Assigned.

Expiration Date: Not Yet Determined.

Type of Request: New Collection.

Abstract: Under the Surety Bond Guarantee (SBG) Program, SBA guarantees bid, payment, and performance bonds for small and emerging contractors who cannot obtain surety bonds through regular commercial channels. SBA's guarantee gives Sureties an incentive to provide bonding for small businesses and, thereby, assists small businesses in obtaining greater access to contracting opportunities. SBA's guarantee is an agreement between a surety and SBA that SBA will assume a certain percentage of the Surety's loss should a contractor default on the underlying contract. On July 30, 2018, SBA announced a change in the fee structure for its SBG Program (83 FR 36658, page 36658–36659). The fee reductions were implemented on October 1, 2018, decreasing the surety fee from a 26 percent to a 20 percent bond premium and decreasing the Principal fee from $7.29 per thousand dollars of the contract amount to $6.00 per thousand dollars of the contract amount. Originally scheduled for 1 year, SBA extended the fee reduction until September 30, 2020 in effort to collect more data to fully evaluate the effect(s) of lower fees on the SBG Program (83 FR 40466, page 40466–40467).

Given that the fee structure has not changed for the last 12 years, SBA would like to evaluate the quantitative impacts of the change on the SBG Program. To properly evaluate the impacts of the fee changes, a multi-method approach will be applied including two study components: (1) Statistical modeling and (2) a web-based survey. The statistical modeling portion of the study will evaluate possible impacts including changes in the utilization of the SBG Program (*e.g.,* principals, surety firms, surety agents) and changes in the SBA's portfolio of guaranteed bonds (*e.g.,* size, duration, risk, cash flow, geographic location, industrial classification) which may, in turn, result in longer term outcomes such as business formations, employment, and opportunities for small and disadvantaged businesses. The web survey portion will evaluate surety firms' and agents' perceptions of the fee reductions and their explanations of how these reductions affected their bonding practices and processes. Data collection efforts are required for the survey portion of the study, while administrative data will be used for the statistical modeling analysis.

Affected Public: Respondent groups identified include (1) surety firms participating in the SBG Program and (2) surety agents participating in the SBG Program. The universe of both respondent types will be surveyed.

Estimated Number of Respondents: The total estimated number of respondents is 500. This includes 50 surety firms and 450 surety agents.

Estimated Number of Responses per Respondent: Both participant types will be asked to participate in one survey.

Estimated Total Annual Responses: 500.

Estimated Time per Response: The estimated response time is 15 minutes for both the surety firm and surety agent populations.

Estimated Total Annual Burden on Respondents: 7,500 minutes (125 hours).

Respondent	Estimated number of respondents	Responses annually per respondent	Total annual responses	Estimated average number of hours per response	Estimated total hours
Reporting Burden:					
Surety firm	50	1.00	50	.25	12.5
Surety agent	450	1.00	450	.25	112.5
Total Reporting Burden	500		500		125

Curtis Rich,

Agency Clearance Office.

[FR Doc. 2019–21109 Filed 9–27–19; 8:45 a.m.]

BILLING CODE 8026–03–P

SMALL BUSINESS ADMINISTRATION

Reporting and Recordkeeping Requirements Under OMB Review

AGENCY: Small Business Administration.

ACTION: 30-Day notice.

SUMMARY: The Small Business Administration (SBA) is publishing this notice to comply with requirements of the Paperwork Reduction Act (PRA) requires agencies to submit proposed reporting and recordkeeping requirements to OMB for review and approval, and to publish a notice in the **Federal Register** notifying the public that the agency has made such a submission. This notice also allows an additional 30 days for public comments.

DATES: Submit comments on or before October 30, 2019.

ADDRESSES: Comments should refer to the information collection by name and/or OMB Control Number and should be sent to: *Agency Clearance Officer,* Curtis Rich, Small Business Administration, 409 3rd Street SW, 5th Floor, Washington, DC 20416; and *SBA Desk Officer,* Office of Information and Regulatory Affairs, Office of Management and Budget, New Executive Office Building, Washington, DC 20503.

FOR FURTHER INFORMATION CONTACT: Curtis Rich, Agency Clearance Officer, (202) 205–7030, *curtis.rich@sba.gov.*

Copies: A copy of the Form OMB 83–1, supporting statement, and other documents submitted to OMB for review may be obtained from the Agency Clearance Officer.

SUPPLEMENTARY INFORMATION: Federal and State Technology Partnership (FAST) Program is a competitive grants program designed to strengthen the technological competitiveness of small businesses seeking funding from the Small Business Innovation Research (SBIR) and Small established the FAST program under the Consolidated Appropriations Act of 2001, codified at 15 U.S.C. 657d(c). The program expired on September 30, 2005 and was reestablished under the Consolidated Appropriations Act of 2010. FAST provides funding to organizations to execute state/regional programs that increase the number of SBIR/STTR proposals (through outreach and financial support); increase the number of SBIR/STTR awards (through technical assistance and mentoring); and better prepare SBIR/STTR awardees for commercialization success (through technical assistance and mentoring). The FAST-Quarterly Reporting Form will collect data from FAST award recipients which will be used to improve program performance. The Quarterly Reports will collect ongoing performance and outcome data from FAST awardees on a required, quarterly basis. As well as improving program management, the data collected will inform the Annual Reports to the Senate Committee on Small Business & Entrepreneurship; the Senate Committee on Commerce, Science, and Transportation; the House Committee on Science, Space, and Technology; and the House Committee on Small Business, as required in the Small Business Act 34 © (1)(2).

Solicitation of Public Comments

SBA is requesting comments on (a) Whether the collection of information is necessary for the agency to properly perform its functions; (b) whether the burden estimates are accurate; (c) whether there are ways to minimize the burden, including through the use of automated techniques or other forms of information technology; and (d) whether there are ways to enhance the quality, utility, and clarity of the information.

Title: FAST Program Quarterly Reporting Form Description of Respondents: FAST award recipients, including Small Business and Technology Development Centers (SBTDC's), state and local economic development agencies, and other Fast award recipients.

Form Number: N/A.

Estimated Annual Responses: 96.

Estimated Annual Hour Burden: 192.

Curtis Rich,

Management Analyst.

[FR Doc. 2019–21128 Filed 9–27–19; 8:45 am]

BILLING CODE 8026–03–P

DEPARTMENT OF STATE

[Public Notice: 10909]

30-Day Notice of Proposed Information Collection: Technology Security/ Clearance Plans, Screening Records, and Non-Disclosure Agreements

ACTION: Notice of request for public comment and submission to OMB of proposed collection of information.

SUMMARY: The Department of State has submitted the information collection described below to the Office of Management and Budget (OMB) for approval. In accordance with the Paperwork Reduction Act of 1995 we are requesting comments on this collection from all interested individuals and organizations. The purpose of this Notice is to allow 30 days for public comment.

DATES: Submit comments directly to the Office of Management and Budget (OMB) up to October 30, 2019.

ADDRESSES: Direct comments to the Department of State Desk Officer in the Office of Information and Regulatory Affairs at the Office of Management and Budget (OMB). You may submit comments by the following methods:

- *Email: oira_submission@omb.eop.gov.* You must include the DS form number, information collection title, and the OMB control number in the subject line of your message.
- *Fax:* 202–395–5806. Attention: Desk Officer for Department of State.

FOR FURTHER INFORMATION CONTACT: Direct requests for additional information regarding the collection listed in this notice, including requests for copies of the proposed collection instrument and supporting documents, to Andrea Battista, who may be reached at *battistaal@state.gov* via email or 202–663–3136 via phone.

SUPPLEMENTARY INFORMATION:

- *Title of Information Collection:* Technology Security/Clearance Plans, Screening Records, and Non-Disclosure Agreements Pursuant to 22 CFR 126.18(c)(2).
- *OMB Control Number:* 1405–0195.
- *Type of Request:* Extension of Currently Approved Collection.
- *Originating Office:* Bureau of Political-Military Affairs, Directorate of Defense Trade Controls (PM/DDTC).
- *Form Number:* No form.
- *Respondents:* Business and Nonprofit Organizations.
- *Estimated Number of Respondents:* 10,000.
- *Estimated Number of Responses:* 10,000.
- *Average Time per Response:* 10 hours.
- *Total Estimated Burden Time:* 100,000 annual hours.
- *Frequency:* On occasion.
- *Obligation to Respond:* Mandatory.

We are soliciting public comments to permit the Department to:

- Evaluate whether the proposed information collection is necessary for the proper functions of the Department.
- Evaluate the accuracy of our estimate of the time and cost burden for this proposed collection, including the validity of the methodology and assumptions used.
- Enhance the quality, utility, and clarity of the information to be collected.
- Minimize the reporting burden on those who are to respond, including the use of automated collection techniques or other forms of information technology.

Please note that comments submitted in response to this Notice are public record. Before including any detailed personal information, you should be aware that your comments as submitted, including your personal information, will be available for public review.

Abstract of Proposed Collection

The export, temporary import, and brokering of defense articles, defense services, and related technical data are licensed by the Directorate of Defense Trade Controls (DDTC) in accordance with the International Traffic in Arms Regulations (''ITAR,'' 22 CFR parts 120–130) and Section 38 of the Arms Export Control Act.

ITAR § 126.18 eliminates, subject to certain conditions, the requirement for an approval by DDTC of the transfer of unclassified defense articles, which includes technical data, to or within a foreign business entity, foreign governmental entity, or international organization that is an authorized end-user or consignee (including transfers to approved sub-licensees) for defense articles, including the transfer to dual nationals or third-country nationals who are bona fide regular employees directly employed by the foreign consignee or end-user.

To use ITAR § 126.18, effective procedures must be in place to prevent diversion to any destination, entity, or for purposes other than those authorized by the applicable export license or other authorization. Those conditions can be met by requiring a security clearance approved by the host nation government for its employees, or requiring the end-user or consignee to have in place a process to screen all its employees and for its employees to complete a Non-Disclosure Agreement that provides assurances that the employee will not transfer any defense articles to persons or entities unless specifically authorized by the consignee or end-user. ITAR § 126.18(c)(2) also provides that the technology security/clearance plans and screening records shall be made available to DDTC or its agents for law enforcement purposes upon request.

Methodology

When information kept on file pursuant to this recordkeeping requirement is required to be sent to the Directorate of Defense Trade Controls, it may be sent electronically or by mail according to guidance given by DDTC.

Karen M. Wrege,

Chief Information Officer.

[FR Doc. 2019–21218 Filed 9–27–19; 8:45 am]

BILLING CODE 4710–25–P

DEPARTMENT OF TRANSPORTATION

Federal Aviation Administration

Drone Advisory Committee (DAC); Meeting

AGENCY: Federal Aviation Administration (FAA), U.S. Department of Transportation (DOT).

ACTION: Notice of Drone Advisory Committee (DAC) meeting.

SUMMARY: This notice announces a meeting of the DAC.

DATES: The meeting will be held on Thursday, October 17, 2019, from 9:00 a.m. to 4:00 p.m. Eastern Time.

Requests to attend the meeting must be received by October 10, 2019.

Requests for accommodations to a disability must be received by Thursday, October 10, 2019.

Requests to submit written materials to be reviewed during the meeting must be received no later than Thursday, October 10, 2019.

ADDRESSES: The meeting will be held at the National Transportation Safety Board Boardroom and Conference Center located at 420 10th Street SW, Washington, DC 20594. Members of the public who wish to attend, must register by emailing *DACmeetingRSVP@faa.gov.* Copies of the meeting minutes will be available on the DAC Committee website at *https://www.faa.gov/uas/programs_partnerships/drone_advisory_committee/.* A final agenda will be posted on the FAA's Notices of Public Meetings web page (*https://www.faa.gov/regulations_policies/rulemaking/npm/*). You can visit the DAC Committee website at *https://www.faa.gov/uas/programs_partnerships/drone_advisory_committee/.*

FOR FURTHER INFORMATION CONTACT: For questions about the DAC, please visit *https://www.faa.gov/uas/programs_partnerships/drone_advisory_committee/* or contact Jessica Orquina, Senior Communications Specialist, Executive Office, UAS Integration Office, at *jessica.a.orquina@faa.gov* or 202–267–7493. Any other committee-related request should be sent to the person listed in this section.

SUPPLEMENTARY INFORMATION:

I. Background

The DAC was created under the Federal Advisory Committee Act (FACA), in accordance with Title 5 of the United States Code (5 U.S.C. App. 2) to provide the FAA with advice on key UAS integration issues by helping to identify challenges and prioritize improvements.

II. Agenda

The agenda will likely include, but may not be limited to, the following:

- Official Statement of the Designated Federal Officer
- Approval of the Agenda and Minutes
- Opening Remarks
- FAA Update
- Industry-Led Technical Topics
- New Business/Agenda Topics
- Closing Remarks
- Adjourn

III. Public Participation

The meeting will be open to the public on a first-come, first served basis, as space is limited. Registration is required for this meeting; members of the public may register at *DACmeetingRSVP@faa.gov* until October 10, 2019. Please provide the following information: Full legal name, country of citizenship, and name of

your industry association, or applicable affiliation. If you are attending as a public citizen, please indicate so.

The U.S. Department of Transportation is committed to providing equal access to this meeting for all participants. If you need alternative formats or services because of a disability, such as sign language, interpretation, or other ancillary aids, please contact the person listed under the heading **FOR FURTHER INFORMATION CONTACT**. Sign and oral interpretation, as well as a listening device, can be made available if requested by October 10, 2019.

The public may present written statements to the committee at any time. Written statements submitted by October 10, 2019, will be provided to the DAC members before the meeting. The FAA is not accepting oral presentations at this meeting due to time constraints.

Issued in Washington, DC, on September 23, 2019.

Erik W. Amend,

Manager, Executive Office, AUS–10, FAA UAS Integration Office.

[FR Doc. 2019–21059 Filed 9–27–19; 8:45 am]

BILLING CODE 4910–13–P

DEPARTMENT OF TRANSPORTATION

Federal Transit Administration

Early Scoping Notice

AGENCY: Federal Transit Administration, DOT.

ACTION: Early scoping for the Staten Island North Shore Bus Rapid Transit Project in Staten Island, New York.

SUMMARY: The Federal Transit Administration (FTA) and the Metropolitan Transportation Authority-New York City Transit (MTA–NYCT) issue this early scoping notice for the Staten Island North Shore Bus Rapid Transit (BRT) Project (Project). MTA–NYCT is exploring ways to improve transit time and reliability on the North and West Shores of Staten Island. The purpose of this early scoping notice is to advise other agencies and the public of the intent to further study the Project. The Project would improve regional transit service by addressing current and projected travel time and reliability issues for trips between the West Shore and St. George Terminal. Early scoping for the Project is occurring within the context of the Council on Environmental Quality's regulations for complying with the National Environmental Policy Act (NEPA).

This notice invites public and agency input to ongoing planning efforts for the Project through commenting on the draft purpose and need, and potential impacts or concerns associated with the Project. The Proposed Project is being evaluated in an environmental impact statement under the New York State Environmental Quality Review Act (SEQRA), and public scoping for the SEQRA process is taking place concurrently with this NEPA early scoping. Should the Project receive FTA funding, FTA intends to use this early scoping process to satisfy the formal NEPA scoping.

DATES: *Staten Island North Shore BRT Early Scoping Meeting:* October 17, 2019, 6:00 p.m. to 8:30 p.m., Snug Harbor Cultural Center & Botanical Gardens, Lower Great Hall, 1000 Richmond Terrace, Staten Island, New York 10301.

Additional Opportunity to Comment: The public also may submit comments through the Project's website, by mail, and by electronic mail at the addresses below. FTA and MTA–NYCT request to receive all comments made in response to the Project's early scoping by November 18, 2019.

ADDRESSES: The public meeting will occur at the Snug Harbor Cultural Center & Botanical Gardens, Lower Great Hall, 1000 Richmond Terrace, Staten Island, New York 10301. The meeting location is accessible to persons with disabilities. If translation, signing services, or other special accommodations are needed, please contact Eric Bohn at 646–252–5165 or via email at *eric.bohn@nyct.com.*

The Project's website is *https://new.mta.info/northshoreeis.* Comments may be emailed to *NorthShoreEIS@nyct.com.* Comments may be mailed to MTA New York City Transit, Staten Island North Shore EIS, 2 Broadway, Room D17.112, New York, NY 10004.

FOR FURTHER INFORMATION CONTACT: Cyrenthia Ward, Community Planner, FTA, One Bowling Green, Room 428, New York, NY 10004. Email: *Cyrenthia.ward@dot.gov.* Telephone: (212) 668–2183. Eric Bohn, Capital Projects Manager, MTA–NYCT, MTA New York City Transit, 2 Broadway, 17th Floor, New York, NY 10004. Telephone: (646) 252–5165. Email: *eric.bohn@nyct.com.*

SUPPLEMENTARY INFORMATION: This notice invites the public to comment on a statement of the Purpose and Need for the Project, the Project study area, potential impacts, and potential alternatives. This notice also invites the public to review and comment on reports previously developed by local planning and transportation agencies that support the focus to further study new BRT service for the North and West Shores.

Early scoping is an optional early step in the NEPA process, which begins when FTA issues a notice of intent to prepare an environmental impact statement (EIS). Early scoping is intended to generate public and agency review and comments on the scope of a planning effort within a defined transportation corridor, the project's purpose and need, potential alternatives, study area, potential social, economic, and environmental impacts, and prior studies before formally preparing an EIS. Early scoping can ensure that the public and interested agencies are given the opportunity to review and provide comments on the results of planning activities that can then be used to inform the NEPA process. Early scoping is intended to identify the most reasonable alternatives to undergo NEPA environmental review.

Please see the Project's website (*https://new.mta.info/northshoreeis*) for more information on the background to the Project, the Purpose and Need for the Project, the Project study area, potential impacts, and potential alternatives.

Authority: 40 CFR 1501.7.

Issued on: September 24, 2019.

Michael L. Culotta,

Deputy Regional Administrator.

[FR Doc. 2019–21123 Filed 9–27–19; 8:45 am]

BILLING CODE 4910–57–P

DEPARTMENT OF TRANSPORTATION

Maritime Administration

Voluntary Intermodal Sealift Agreement—5 Year Extension

AGENCY: Maritime Administration, Department of Transportation.

ACTION: Notice.

SUMMARY: The Maritime Administration (MARAD) announces the extension of the Voluntary Intermodal Sealift Agreement (VISA) until October 1, 2024, pursuant to section 708 of the Defense Production Act of 1950, as amended. The purpose of the VISA is to make intermodal shipping services/systems, including ships, ships' space, intermodal facilities and equipment, and related management services, available to the Department of Defense as required to support the emergency deployment and sustainment of U.S. Armed Forces. This is to be accomplished through cooperation among the maritime industry, the

Department of Transportation and the Department of Defense.

FOR FURTHER INFORMATION CONTACT: William G. McDonald, Office of Sealift Support, Room W25–310, Maritime Administration, 1200 New Jersey Avenue SE, Washington, DC 20590, *William.McDonald@dot.gov,* (202) 366–2323, Fax (202) 366–5904.

SUPPLEMENTARY INFORMATION: Pursuant 50 U.S.C. 4558(f)(2), the VISA may be extended for an additional period of 5 years provided (a) the Maritime Administrator (Administrator) certifies by publication in the **Federal Register** that the VISA is necessary for the national defense or preparedness programs and (b) the Attorney General (after consultation with the Chairman of the Federal Trade Commission (FTC)) finds that such purpose may not reasonably be achieved through a voluntary agreement or plan of action having less anticompetitive effects or without any voluntary agreement.

By this notice, the Administrator determines that conditions exist which may pose a direct threat to the national defense of the United States or its preparedness programs and certifies that the VISA, a standby agreement for utilization of intermodal shipping services/systems, is necessary for the national defense or preparedness programs. The Attorney General, after consultation with the Chairman of the FTC, found the national defense or preparedness programs may not reasonably be achieved through a voluntary agreement or plan of action having less anticompetitive effects or without any voluntary agreement. Publication of these findings in this notice satisfies the publication requirements of 50 U.S.C. 4558(f). Accordingly, the VISA, as published in the **Federal Register** on October 29, 2014 (79 FR 64462), is extended until October 1, 2024. Current VISA participants are therefore not required to submit a new VISA application pursuant to this extension.

Copies of the VISA are available to the public upon request.

Authority: 50 U.S.C. 4558; E.O. 13603, 77 FR 16651; E.O. 12656, 55 FR 47491; 49 CFR 1.93(l), 49 CFR 1.81(a)(10).

Dated: September 25, 2019.

By Order of the Maritime Administrator.

T. Mitchell Hudson, Jr.,

Secretary, Maritime Administration.

[FR Doc. 2019–21215 Filed 9–27–19; 8:45 am]

BILLING CODE 4910–81–P

DEPARTMENT OF THE TREASURY

Office of the Comptroller of the Currency

Agency Information Collection Activities: Information Collection Revision; Comment Request; Licensing Manual

AGENCY: Office of the Comptroller of the Currency (OCC), Treasury.

ACTION: Notice and request for comment; correction.

SUMMARY: The OCC, as part of its continuing effort to reduce paperwork and respondent burden, invites the general public and other federal agencies to take this opportunity to comment on a revised information collection as required by the Paperwork Reduction Act of 1995 (PRA).

In accordance with the requirements of the PRA, the OCC may not conduct or sponsor, and respondents are not required to respond to, an information collection unless it displays a currently valid Office of Management and Budget (OMB) control number.

The OCC is soliciting comment concerning the revision of its information collection titled ''Licensing Manual.''

DATES: Comments must be received on or before November 29, 2019.

ADDRESSES: Commenters are encouraged to submit comments by email, if possible. You may submit comments by any of the following methods:

- *Email: prainfo@occ.treas.gov.*
- *Mail:* Chief Counsel's Office, Attention: Comment Processing, OMB Control No. 1557–0014, Office of the Comptroller of the Currency, 400 7th Street SW, Suite 3E–218, Washington, DC 20219.
- *Hand Delivery/Courier:* 400 7th Street SW, Suite 3E–218, Washington, DC 20219.
- *Fax:* (571) 465–4326.

Instructions: You must include ''OCC'' as the agency name and ''1557–0014'' in your comment. In general, the OCC will publish comments on *www.reginfo.gov* without change, including any business or personal information provided, such as name and address information, email addresses, or phone numbers. Comments received, including attachments and other supporting materials, are part of the public record and subject to public disclosure. Do not include any information in your comment or supporting materials that you consider confidential or inappropriate for public disclosure.

You may review comments and other related materials that pertain to this information collection beginning on the date of publication of the second notice for this collection [1] by any of the following methods:

- *Viewing Comments Electronically:* Go to *www.reginfo.gov.* Click on the ''Information Collection Review'' tab. Underneath the ''Currently under Review'' section heading, from the drop-down menu, select ''Department of Treasury'' and then click ''submit.'' This information collection can be located by searching by OMB control number ''1557–0014'' or ''Licensing Manual.'' Upon finding the appropriate information collection, click on the related ''ICR Reference Number.'' On the next screen, select ''View Supporting Statement and Other Documents'' and then click on the link to any comment listed at the bottom of the screen.
- For assistance in navigating *www.reginfo.gov,* please contact the Regulatory Information Service Center at (202) 482–7340.
- *Viewing Comments Personally:* You may personally inspect comments at the OCC, 400 7th Street SW, Washington, DC. For security reasons, the OCC requires that visitors make an appointment to inspect comments. You may do so by calling (202) 649–6700 or, for persons who are deaf or hearing impaired, TTY, (202) 649–5597. Upon arrival, visitors will be required to present valid government-issued photo identification and submit to security screening in order to inspect comments.

FOR FURTHER INFORMATION CONTACT: Shaquita Merritt, Clearance Officer, (202) 649–5490 or, for persons who are deaf or hearing impaired, TTY, (202) 649–5597, Chief Counsel's Office, Office of the Comptroller of the Currency, 400 7th Street SW, Suite 3E–218, Washington, DC 20219.

SUPPLEMENTARY INFORMATION: Under the PRA (44 U.S.C. 3501–3520), federal agencies must obtain approval from the OMB for each collection of information that they conduct or sponsor. ''Collection of information'' is defined in 44 U.S.C. 3502(3) and 5 CFR 1320.3(c) to include agency requests or requirements that members of the public submit reports, keep records, or provide information to a third party. Section 3506(c)(2)(A) of title 44 requires federal agencies to provide a 60-day notice in the **Federal Register** concerning each proposed collection of information, including each proposed extension or revision of an existing collection of information, before submitting the collection to OMB for approval. To

[1] Following the close of this notice's 60-day comment period, the OCC will publish a second notice with a 30-day comment period.

comply with this requirement, the OCC is publishing notice of the revision of the collection of information set forth in this document.

Title: Licensing Manual.

OMB Control No.: 1557–0014.

Description: The Licensing Manual sets forth the OCC's policies and procedures for the formation of a national bank or federal branch or agency, entry into the federal banking system by other institutions, and corporate expansion and structural changes by existing banks. The Manual includes sample documents to assist the applicant in understanding the types of information the OCC needs in order to process a filing. An applicant may use the format of the sample documents or any other format that provides sufficient information for the OCC to act on a particular filing, including the OCC's electronic filing system, the Central Application Tracking System (CATS).

The OCC will no longer consider National Historic Preservation Act matters and National Environmental Policy Act matters as a part of the review of applications and is removing references to them in its branching and relocation forms.

Type of Review: Extension of a currently approved collection.

Affected Public: Individuals; Businesses or other for-profit.

Frequency of Response: On occasion.

Estimated Number of Respondents: 3,715.

Estimated Total Annual Burden: 12,533 hours.

Comments submitted in response to this notice will be summarized and included in the submission to OMB. Comments are requested on:

(a) Whether the information collections are necessary for the proper performance of the OCC's functions, including whether the information has practical utility;

(b) The accuracy of the OCC's estimates of the burden of the information collections, including the validity of the methodology and assumptions used;

(c) Ways to enhance the quality, utility, and clarity of the information to be collected; and

(d) Ways to minimize the burden of information collections on respondents, including through the use of automated collection techniques or other forms of information technology.

Dated: September 24, 2019.

Theodore J. Dowd,

Deputy Chief Counsel, Office of the Comptroller of the Currency.

[FR Doc. 2019–21071 Filed 9–27–19; 8:45 am]

BILLING CODE 4810–33–P

DEPARTMENT OF THE TREASURY

Internal Revenue Service

Proposed Collection; Comment Request for Form 1040, Form 1040NR, Form 1040NR–EZ, Form 1040X, 1040–SR and All Attachments and Related Forms

AGENCY: Internal Revenue Service (IRS), Treasury.

ACTION: Notice and request for comments.

SUMMARY: The Internal Revenue Service, as part of its continuing effort to reduce paperwork and respondent burden, invites the general public and other Federal agencies to take this opportunity to comment on proposed and continuing information collections, as required by the Paperwork Reduction Act of 1995 (PRA. This notice requests comments on all forms used by individual taxpayers: Form 1040, U.S. Individual Income Tax Return; Form 1040NR; Form 1040NR–EZ; Form 1040X, 1040–SR and attachments, related forms and, some related regulations (see the Appendix A and B to this notice). In addition, there are numerous OMB numbers that report burden already included in this OMB number. In order to eliminate this duplicative burden reporting, 25 OMB numbers are being obsoleted. See Appendix C for information on the obsoleted OMB numbers and the burden that was/is reported under those numbers.

DATES: Written comments should be received on or before November 29, 2019 to be assured of consideration.

ADDRESSES: Direct all written comments to The OMB Unit, SE:W:CAR:MP:T:M:SS, Internal Revenue Service, Room 6529, 1111 Constitution Avenue NW, Washington, DC 20224. Requests for additional information should be directed to Laurie Brimmer, at Internal Revenue Service, Room 6526, 1111 Constitution Avenue NW, Washington, DC 20224, or through the internet, at *laurie.e.brimmer@irs.gov.*

SUPPLEMENTARY INFORMATION:

PRA Approval of Forms Used by Individual Taxpayers

Under the PRA, OMB assigns a control number to each ''collection of information'' that it reviews and approves for use by an agency. The PRA also requires agencies to estimate the burden for each collection of information. Burden estimates for each control number are displayed in (1) PRA notices that accompany collections of information, (2) **Federal Register** notices such as this one, and (3) OMB's database of approved information collections.

Taxpayer Burden

Burden is defined as the time and out-of-pocket costs incurred by taxpayers in complying with the Federal tax system and are estimated separately. Out-of-pocket costs include any expenses incurred by taxpayers to prepare and submit their tax returns. Examples include tax return preparation fees, the purchase price of tax preparation software, submission fees, photocopying costs, postage, and phone calls (if not toll-free).

Taxpayer Burden Estimates

Table 1 shows the preliminary burden estimates for individual taxpayers filing 2020 Form 1040, Form 1040NR, Form 1040NR–EZ, Form 1040X, 1040–SR tax return. The estimate is preliminary and reflects only the change in burden from technical adjustments related to updating the number of affected taxpayers to reflect the FY2020 forecast. The estimate will be revised to reflect legislative and regulatory changes since 2018 and further detail about the burden estimates will be provided for the 30-day notice for this FRN.

Reported time and cost burdens are national averages and do not necessarily reflect a ''typical'' case. Most taxpayers experience lower than average burden, with taxpayer burden varying considerably by taxpayer type.

Proposed PRA Submission to OMB

Title: U.S. Individual Income Tax Return.

OMB Number: 1545–0074.

Form Numbers: Form 1040; Form 1040NR; Form 1040NR–EZ, Form 1040X, 1040–SR and all attachments and related forms (see the Appendix A to this notice).

Abstract: OMB number 1545–0074 reports the estimated burden incurred by individual taxpayers to meet their tax-compliance-related reporting requirements. The estimate is preliminary and reflects only the change in burden related to technical adjustments related to updating the number of affected taxpayers to reflect the FY2020 forecast.

Type of Review: Revision of currently approved collections.

Affected Public: Individuals or households.

Estimated Number of Respondents: 159,800,000.

Total Estimated Time: 1.755 billion hours (1,755,000,000 hours).

Estimated Time per Respondent: 10.98 hours.

Total Estimated Out-of-Pocket Costs: $32.318 billion ($32,318,000,000).

Estimated Out-of-Pocket Cost per Respondent: $202.

Total Monetized Burden Costs: $60.424 billion ($60,424,000,000).

Estimated Total Monetized Burden per Respondent: $378.

Note: Amounts below are for FY2020. Reported time and cost burdens are national averages and do not necessarily reflect a ''typical'' case. Most taxpayers experience lower than average burden, with taxpayer burden varying considerably by taxpayer type. Detail may not add due to rounding.

TABLE 1—ICB ESTIMATES FOR THE 1040/NR/NR–EZ/X SERIES OF RETURNS AND SUPPORTING FORMS AND SCHEDULES FY2020

	FY19	Program change due to adjustment	FY20
Number of Taxpayers	157,800,000	2,000,000	159,800,000
Burden in Hours	1,784,000,000	(28,000,000)	1,755,000,000
Burden in Dollars	31,764,000,000	554,000,000	32,318,000,000
Monetized Total Burden	60,225,000,000	199,000,000	60,424,000,000

Source RAAS:KDA 9/3/2019.

An agency may not conduct or sponsor, and a person is not required to respond to, a collection of information unless the collection of information displays a valid OMB Control Number.

Books or records relating to a collection of information must be retained as long as their content may become material in the administration of any internal revenue law. Generally, tax returns and tax return information are confidential, as required by 26 U.S.C. 6103.

Request for Comments

Comments submitted in response to this notice will be summarized and/or included in the request for OMB approval. All comments will become a matter of public record. Comments are invited on: (a) Whether the collection of information is necessary for the proper performance of the functions of the agency, including whether the information will have practical utility; (b) the accuracy of the agency's estimate of the burden of the collection of information; (c) ways to enhance the quality, utility, and clarity of the information to be collected; (d) ways to minimize the burden of the collection of information on respondents, including through the use of automated collection techniques or other forms of information technology; and (e) estimates of capital or start-up costs and costs of operation, maintenance, and purchase of services to provide information.

Approved: September 24, 2019.

Laurie Brimmer,

Senior Tax Analyst.

APPENDIX A

Form No.	Form name
Form 1040	U.S. Individual Tax Return.
Form 1040 X	Amended U.S. Individual Income Tax Return.
Form 1040 NR	U.S. Nonresident Alien Income Tax Return.
Form 1040 NR–EZ	U.S. Income Tax Return for Certain Nonresident Aliens with No Dependents.
Schedule A (1040)	Itemized Deductions.
Schedule B (Form 1040)	Interest and Ordinary Dividends.
Schedule C (Form 1040)	Profit or Loss from Business.
Schedule C–EZ (Form 1040)	Net Profit from Business.
Schedule D (Form 1040)	Capital Gains and Losses.
Schedule E (Form 1040)	Supplemental Income and Loss.
Schedule EIC (Form 1040)	Earned Income Credit.
Schedule F (Form 1040)	Profit or Loss from Farming.
Schedule H (Form 1040) and Sch H(PR)	Household Employment Taxes.
Schedule J (Form 1040)	Income Averaging for Farmers and Fishermen.
Schedule R (Form 1040)	Credit for the Elderly or the Disabled.
Schedule SE (Form 1040)	Self-Employment Tax.
Form 1040 V	Payment Voucher.
Form 1040 ES/OCR	Estimated Tax for Individuals (Optical Character Recognition with Form 1040V).
Form 1040 ES	Estimate Tax for Individuals.
Form 673	Statement for Claiming Exemption from Withholding on Foreign Earned Income Eligible for the Exclusions Provided by Section 911.
Form 926	Return by a U.S. Transferor of Property to a Foreign Corporation.
Form 970	Application to Use LIFO Inventory Method.
Form 972	Consent of Shareholder to Include Specific Amount in Gross Income.
Form 982	Reduction of Tax Attributes Due to Discharge of Indebtedness (and Section 1082 Basis Adjustment).
Form 1045	Application for Tentative Refund.
Form 1116	Foreign Tax Credit.
Form 1127	Application for Extension of Time for Payment of Tax.
Form 1128	Application to Adopt, Change, or Retain a Tax Year.
Form 1310	Statement of Person Claiming Refund Due to a Deceased Taxpayer.
Form 2106	Employee Business Expenses.
Form 2106–EZ	Unreimbursed Employee Business Expenses.

APPENDIX A—Continued

Form No.	Form name
Form 2120	Multiple Support Declaration.
Form 2210	Underpayment of Estimated Tax by Individuals, Estates, and Trusts.
Form 2210–F	Underpayment of Estimated Tax by Farmers and Fishermen.
Form 2350	Application for Extension of Time to File U.S. Income Tax Return.
Form 2350 SP	Solicitud de Prorroga para Presentar la Declaracion del Impuesto Personal sobre el Ingreso de lose Estados Unidos.
Form 2439	Notice to Shareholder of Undistributed Long-Term Capital Gains.
Form 2441	Child and Dependent Care Expenses.
Form 2555	Foreign Earned Income.
Form 2555 EZ	Foreign Earned Income Exclusion.
Form 2848	Power of Attorney and Declaration of Representative.
Form 3115	Application for Change in Accounting Method.
Form 3468	Investment Credit.
Form 3520	Annual Return to Report Transactions with Foreign Trusts and Receipt of Certain Foreign Gifts.
Form 3800	General Business Credit.
Form 3903	Moving Expenses.
Form 4029	Application for Exemption from Social Security and Medicare Taxes and Waiver of Benefits.
Form 4070	Employee's Report of Tips to Employer.
Form 4070A	Employee's Daily Record of Tips.
Form 4136	Credit for Federal Tax Paid on Fuels.
Form 4137	Social Security and Medicare Tax on Underreported Tip Income.
Form 4255	Recapture of Investment Credit.
Form 4361	Application for Exemption From Self-Employment Tax for Use by Ministers, Members of Religious Orders, and Christian Science Practitioners.
Form 4562	Depreciation and Amortization.
Form 4563	Exclusion of Income for Bona Fide Residents of American Samoa.
Form 4684	Casualties and Thefts.
Form 4797	Sale of Business Property.
Form 4835	Farm Rental Income and Expenses.
Form 4852	Substitute for Form W–2, Wage and Tax Statement or Form 1099–R, Distributions From Pension Annuities, Retirement or Profit-Sharing Plans, IRAs, Insurance Contracts, etc.
Form 4868	Application for Automatic Extension of Time to Tile Individual U.S. Income Tax Return.
Form 4868 SP	Solicitud de Prorroga Automatica para Presentar la Declaracion del Impuesto sobre el Ingreso Personal de los Estados Unidos.
Form 4952	Investment Interest Expense Deduction.
Form 4970	Tax on Accumulation Distribution of Trusts.
Form 4972	Tax on Lump-Sum Distributions.
Form 5074	Allocation of Individual Income Tax To Guam or the Commonwealth of the Northern Mariana Islands (CNMI).
Form 5213	Election to Postpone Determination as to Whether the Presumption Applies that an Activity is Engaged in for Profit.
Form 5329	Additional Taxes on Qualified Plans (Including IRAs) and Other Tax-Favored Accounts.
Form 5405	First-Time Homebuyer Credit.
Form 5471	Information Return of U.S. Persons with Respect to Certain Foreign Corporations.
Schedule J (Form 5471)	Accumulated Earnings and Profits (E&P) and Taxes of Controlled Foreign Corporations.
Schedule M (Form 5471)	Transactions Between Controlled Foreign Corporation and Shareholders or Other Related Persons.
Schedule O (Form 5471)	Organization or Reorganization of Foreign Corporation, and Acquisitions and Dispositions of its Stock.
Form 5695	Residential Energy Credits.
Form 5713	International Boycott Report.
Schedule A (Form 5713)	International Boycott Factor (Section 999(c)(1)).
Schedule B (Form 5713)	Specifically Attributable Taxes and Income (Section 999(c)(2)).
Schedule C (Form 5713)	Tax Effect of the International Boycott Provisions.
Form 5754	Statement by Person(s) Receiving Gambling Winnings.
Form 5884	Work Opportunity Cost.
Form 6198	At-Risk Limitations.
Form 6251	Alternative Minimum Tax-Individuals.
Form 6252	Installment Sale Income.
Form 6478	Credit for Alcohol Used as Fuel.
Form 6765	Credit for Increasing Research Activities.
Form 6781	Gains and Losses From Section 1256 Contracts and Straddles.
Form 8082	Notice of Inconsistent Treatment or Administrative Adjustment Request (AAR).
Form 8275	Disclosure Statement.
Form 8275–R	Regulation Disclosure Statement.
Form 8283	Noncash Charitable Contributions.
Form 8332	Release of Claim to Exemption for Child of Divorced or Separated Parents.
Form 8379	Injured Spouse Claim and Allocation.
Form 8396	Mortgage Interest Credit.
Form 8453	U.S. Individual Income Tax Declaration for an IRS e-file Return.
Form 8582	Passive Activity Loss Limitation.
Form 8582–CR	Passive Activity Credit Limitations.
Form 8586	Low-Income Housing Credit.

APPENDIX A—Continued

Form No.	Form name
Form 85948801	Asset Acquisition Statement.
Form 8606	Nondeductible IRAs.
Form 8609–A	Annual Statement for Low-Income Housing Credit.
Form 8611	Recapture of Low-Income Housing Credit.
Form 8615	Tax for Certain Children Who Have Investment Income of More than $1,800.
Form 8621	Return by a Shareholder of a Passive Foreign Investment Company or Qualified Electing Fund.
Form 8621–A	Late Deemed Dividend or Deemed Sale Election by a Passive Foreign Investment Company.
Form 8689	Allocation of Individual Income Tax to the Virgin Islands.
Form 8693	Low-Income Housing Credit Disposition Bond.
Form 8697	Interest Computations Under the Look-Back Method for Completed Long-Term Contracts.
Form 8801	Credit for Prior Year Minimum Tax-Individuals, Estates, and Trusts.
Form 8812	Additional Child Tax Credit.
Form 8814	Parents' Election to Report Child's Interest and Dividends.
Form 8815	Exclusion of Interest From Series EE and I U.S. Savings Bonds Issued After 1989.
Form 8818	Optional Form to Record Redemption of Series EE and I U.S. Savings Bonds Issued After 1989.
Form 8820	Orphan Drug Credit.
Form 8821	Tax Information Authorization.
Form 8822	Change of Address.
Form 8824	Like-Kind Exchanges.
Form 8826	Disabled Access Credit.
Form 8828	Recapture of Federal Mortgage Subsidy.
Form 8829	Expenses for Business Use of Your Home.
Form 8832	Entity Classification Election.
Form 8833	Treaty-Based Return Position Disclosure Under Section 6114 or 7701(b).
Form 8834	Qualified Electric Vehicle Credit.
Form 8835	Renewable Electricity and Refined Coal Production Credit.
Form 8838	Consent to Extend the Time to Assess Tax Under Section 367-Gain Recognition Statement.
Form 8839	Qualified Adoption Expenses.
Form 8840	Closer Connection Exception Statement for Aliens.
Form 8843	Statement for Exempt Individuals and Individuals With a Medical Condition.
Form 8844	Empowerment Zone and Renewal Community Employment Credit.
Form 8845	Indian Employment Credit.
Form 8846	Credit for Employer Social Security and Medicare Taxes Paid on Certain Employee tips.
Form 8853	Archer MSAs and Long-Term Care Insurance Contracts.
Form 8854	Initial and Annual Expatriation Information Statement.
Form 8858	Information Return of U.S. Persons With Respect to Foreign Disregarded Entities.
Schedule M (Form 8858)	Transactions Between controlled Foreign Disregarded Entity and Filer or Other Related Entities.
Form 8859	District of Columbia First-Time Homebuyer Credit.
Form 8862	Information to Claim Earned Income Credit After Disallowance.
Form 8863	Education Credits.
Form 8864	Biodiesel Fuels Credit.
Form 8865	Return of U.S. Persons With Respect to Certain Foreign Partnerships.
Schedule K–1	Partner's Share of Income Deductions, Credits, etc.
Schedule O (Form 8865)	Transfer of Property to a Foreign Partnership.
Schedule P (Form 8865)	Acquisitions, Dispositions, and Changes of Interests in a Foreign Partnership.
Form 8866	Interest Corporation Under the Look-Back Method for Property Depreciated Under the Income Forecast Method.
Form 8873	Extraterritorial Income Exclusion.
Form 8874	New Markets Credit.
Form 8878	IRS e-file Signature Authorization for Form 4686 or Form 2350.
Form 8878 SP	Autorizacion de firma para presentar por medio del IRS e-file para el Formulario 4868 (SP) o el Formulario 2350 (SP).
Form 8879	IRS e-file Signature Authorization.
Form 8879 SP	Autorizacion de firm para presentar la Declaracion por medio del IRS e-file.
Form 8880	Credit for Qualified Retirement Savings Contributions.
Form 8881	Credit for Small Employer Pensions Plan Startup Costs.
Form 8882	Credit for Employer-Provided Childcare Facilities and Services.
Form 8885	Health Coverage Tax Credit.
Form 8886	Reportable Transaction Disclosure Statement.
Form 8888	Direct Deposit of Refund to More than One Account.
Form 8889	Health Savings Accounts (HSAs).
Form 8896	Low Sulfur Diesel Fuel Production Credit.
Form 8898	Statement for Individuals Who Begin or End Bona Fide Residence in a U.S. Possession.
Form 8900	Qualified Railroad Track Maintenance Credit.
Form 8903	Domestic Production Activities Deduction.
Form 8906	Distills Spirits Credit.
Form 8907	Nonconventional Source Fuel Credit.
Form 8908	Energy Efficient Home Credit.
Form 8910	Alternative Motor Vehicle Credit.
Form 8911	Alternative Fuel Vehicle Refueling Property Credit.
8912	Credit to Holders of Tax Credit Bonds.
Form 8917	Tuition and Fees Deduction.

APPENDIX A—Continued

Form No.	Form name
Form 8919	Uncollected Social Security and Medicare Tax on Wages.
Form 8925	Report of Employer-Owned Life Insurance Contracts.
Form 8932	Credit for Employer Differential Wage Payments.
Form 8933	Carbon Dioxide Sequestration Credit.
Form 8936	Qualified Plug-In Electric Drive Motor Vehicle Credit.
Form 9465	Installment Agreement Request.
Form 9465 SP	Solicitud para un Plan de Pagos a Plazos.
Form SS–4	Application for Employer Identification Number.
Form SS–8	Determination of Worker Status for Purposes of Federal Employment Taxes and Income Tax Withholding.
Form T (Timber)	Forest Activities Schedules.
Form W–4	Employee's Withholding Allowance Certificate.
Form W–4 P	Withholding Certificate for Pension or Annuity Payments.
Form W–4 S	Request for Federal Income Tax Withholding From Sick Pay.
Form W–4 V	Voluntary Withholding Request.
Form W–4 (SP)	Certificado de Exencion de la Retencion del Empleado.
Form W–7	Application for IRS Individual Taxpayer Indentification Number.
Form W–7 A	Application for Taxpayer Identification Number for Pending U.S. Adoptions.
Form W–7 (SP)	Solicitud de Numero de Indenticacion Personal del Contribuyente del Servico de Impuestos Internos.
Form 1040 ES (NR)	U.S. Estimated Tax for Nonresident Alien Individuals.
Form 1040 ES (PR)	Federales Estimadas del Trabajo por Cuenta Propia y sobre el Impleo de Empleados Domestocs-Puerto Rico.
W–7 (COA)	Certificate of Accuracy for IRS Individual Taxpayer Identification Number.
Form 1040 Schedule 1	Form 1040 Schedule 1 Additional Income and Adjustments to Income.
Form 1040 Schedule 2	Form 1040 Schedule 2 Tax.
Form 1040 Schedule 3	Form 1040 Schedule 3 Nonrefundable Credits.
Form 1040 Schedule 4	Form 1040 Schedule 4 Other Taxes.
Form 1040 Schedule 5	Form 1040 Schedule 5 Other Payments and Refundable Credits.
Form 1040 Schedule 6	Form 1040 Schedule 6 Foreign Address and Third Party Designee.
Form 1040–C	U.S. Departing Alien Income Tax Return.
Form 1040–SR	U.S. Income Tax Return for Seniors.
Form 8867	Paid Preparer's Due Diligence Checklist.
Form 8915–C	Qualified 2018 Disaster Retirement Plan Distributions and Repayments.
Form 8958	Allocation of Tax Amounts Between Certain Individuals in Community Property States.
Form 8962	Premium Tax Credit (PTC).
Form 965–C	Form 965–C, Transfer Agreement Under 965(h)(3).
Form 3911	Taxpayer Statement Regarding Refund.
Form 8857	Request for Innocent Spouse Relief.
Form 8302	Electronic Deposit of Tax Refund of $1 Million or more.
Form 14039	Identity Theft Affidavit.
Form 14095	The Health Coverage Tax Credit (HCTC) Reimbursement Request Form.
Form 8938	Statement of Specified Foreign Financial Assets.

APPENDIX B

	Title/description
1545–0735**	Final Amortization of Reforestation Expenditures (TD 7927).
1545–0768***	TD 7898—Employers Qualified Educational Assistance Programs.
1545–0771***	TD 8864 (Final); EE–63–88 (Final and temp regulations) Taxation of Fringe Benefits and Exclusions From Gross Income for Certain Fringe Benefits; IA–140–86 (Temporary) Fringe Benefits Treas reg 1.274.
1545–0782**	Limitation on reduction in income tax liability incurred to the Virgin Islands.
1545–0916***	TD 8073 (Temporary Regulations)—Effective Dates and Other Issues Arising Under the Employee Benefit Provisions of the Tax Reform Act of 1984.
1545–1005**	TD 8302—Low-Income Housing Credit for Federally-assisted Buildings.
1545–1051**	TD 8556 (Final)—Computation and Characterization of Income and Earnings and Profits Under the Dollar Approximate Separate Transactions Method of Accounting (DASTM).
1545–1056**	REG–209020–86 (NPRM & Temporary)—Foreign Tax Credit: Notification of Foreign Tax Redeterminations.
1545–1112	Time and Manner of Making Certain Elections Under the Technical and Miscellaneous Revenue Act of 1988 (26 CFR 301.9100–8).
1545–1131	TD 8400—(Final) Taxation of Gain or Loss from Certain Nonfunctional Currency Transactions (Section 988 Transactions).
1545–1132**	Denial of interest deduction on certain obligations to foreign persons.
1545–1139**	Adjustments to Basis of Stock and Indebtedness to Shareholders of S Corporations and Treatment of Distributions by S Corporations to Shareholders (TD 9300); TD 9428—Section 1367 Regard.
1545–1201*	Election to Expense Certain Depreciable Business Assets.
1545–1244*	T.D. 9013 Limitation on Passive Activity Losses and Credits—Treatment on Self-Charged Items of Income and Expense.
1545–1251**	TD 8437—Limitations on Percentage Depletion in the Case of Oil and Gas Wells.
1545–1265	Capitalization of Interest.
1545–1353	TD 8517: Debt Instruments With Original Discount; Imputed Interest on Deferred Payment Sales or Exchanges of Property; TD 9599: Property Traded on an Established Market.

APPENDIX B—Continued

	Title/description
1545–1435	TD 8706 Electronic Filing of Form W–4.
1545–1450	Debt Instructions With Originals Issue Discount; Contingent Payments; Anti-Abuse Rule (TD 8674).
1545–1452*	FI–43–94 (TD 8649—Final) Regulations Under Section 1258 of the Internal Revenue Code of 1986; Netting Rule for Certain Conversion Transactions.
1545–1464*	TD 8960 (Final)—Deductibility, Substantiation, and Disclosure of Certain Charitable Contributions.
1545–1484**	TD 8881(Final) REG–242282–97 (formerly Intl-62–90, Intl-32–93, Intl-52–86, and Intl-52–94) General Revision of Regulations Relating to Withholding of Tax on Certain U.S. Source Income Paid to Foreign Persons and Revisions of Information.
1545–1522***	Revenue Procedure 2017–52, 2017–1, 2017–3 Rulings and determination letters.
1545–1546***	Revenue Procedure 97–33, EFTPS (Electronic Federal Tax Payment System).
1545–1595	Automatic Data Processing—(Rev. Proc. 98–25).
1545–1616*	TD 8816 (Final) Roth IRAs.
1545–1649*	Rev. Proc. 99–21 Disability Suspension.
1545–1660**	Notice 99–43 Nonrecognition Exchanges under Section 897.
1545–1701**	Revenue Procedure 2000–37—Reverse Like-kind Exchanges (as modified by Rev Proc. 2004–51).
1545–1748**	Changes in Accounting Periods—REG–106917–99 (TD 8669/Final).
1545–1773*	Revenue Procedure 2014–55, Election Procedures and Information Reporting with Respect to Interests in Certain Canadian Retirement Plans.
1545–1792	Split-Dollar Life Insurance Arrangements.
1545–1797**	(TD9082)(Final), Revision of Income Tax Regulations under Sections 897, 1445, and 6109 to require use of Taxpayer Identifying Numbers on Submission under the Section 897 and 1445.
1545–1816*	TD 9054—Disclosure of Returns and Return Information to Designee of Taxpayer (as amended by TD 9618).
1545–1831**	TD 9157 (Final) Guidance Regarding the Treatment of Certain Contingent Payment Debt Instruments w/one or more Payments that are Denominated in, or Determined by Reference to, a Nonfunctional Currency.
1545–1834**	Revenue Procedure 2003–39, Section 1031 LKE (Like-Kind Exchanges) Auto Leasing Programs.
1545–1843**	TD 9207 (final)—Assumptions of Partner Liabilities; REG–106736–00 (NPRM).
1545–1855**	TD 9285—Limitation on Use of the Nonaccrual-Experience Method of Accounting Under Section 448(d)(5).
1545–1899	Timely Mailing Treated As Timely Filing.
1545–1900**	(TD 9212) Final, Source of Compensation for Labor or Personal Services.
1545–1903**	TD 9168—Optional 10-Year Write-off of Certain Tax Preferences (REG–124405–03).
1545–1930*	T.D. 9248—Residence and Source Rules Involving U.S. Possessions and Other Conforming Changes (Final and Temporary).
1545–1937**	Notice 2005–41, Guidance Regarding Qualified Intellectual Property Contributions.
1545–1956*	Rev. Proc. 2007–25, Revenue Procedure regarding I.R.C. 6707A(e) and Disclosure with the SEC.
1545–1992	REG–146459–05—TD 9324 (Final) Designated Roth Contributions Under Section 402A.
1545–1994**	Notice 2008–36: Amplification of Notice 2006–28 Energy Efficient Homes Credit; Manufactured Homes.
1545–2001	Rev. Proc. 2006–16, Renewal Community Depreciation Provisions.
1545–2018*	Revenue Procedure 2006–31, Revocation of Election filed under I.R.C. 83(b).
1545–2040	Automatic Consent to change certain elections relating to the apportionment of interest expense and research and experimental expenditures (RP 2006–42).
1545–2044	Revenue Procedure 2015–40, Procedures for Requesting Competent Authority Assistance Under Tax Treaties.
1545–2047**	Rescission of penalty for failure to include reportable transaction information with return.
1545–2115*	TD 9481—Travel Expenses of State Legislators (REG–119518–07).
1545–2120**	Revenue Procedures 2008–60; 2012–27: Election Involving the Repeal of the Bonding Requirement and Notification of Increase of Tax under § 42(j)(6).
1545–2134**	Notice 2009–41—Credit for Residential Energy Efficient Property.
1545–2156**	Revenue Procedure 2010–13, Disclosure of Activities Grouped under Section 469.
1545–2158	Notice 2010–54: Production Tax Credit for Refined Coal.
1545–2167	Stripping Transactions for Qualified Tax Credit Bonds.
1545–2169*	Notice 2010–30/Notice 2012–41—Transitional Guidance for Taxpayers Claiming Relief Under the Military Spouses Residency Relief Act for Taxable Year 2009 and Subsequent Years.
1545–2194**	Rules for Certain Rental Real Estate Activities.
1545–2283	Form 461 Limitation on Business Losses.

* OMB Numbers are or to be retired because they are applicable to Individual filers (1545–0074).
** OMB Numbers are or to be retired because they are applicable to Individual (1545–0074) and business (1545–0123) filers.
*** OMB Numbers are or to be retired because they are applicable to Individual (1545–0074) and business (1545–0123) and Tax Exempt (1545–0047) filers.

APPENDIX C

OMB numbers that will no longer be separately reported in order to eliminate duplicate burden reporting. For individual filers, the following OMB numbers are or will be retired resulting in a total reduction of 94,011,246 reported burden hours:

Burden hours	OMB No.	Title/description
17,049	1545–0138	U.S. Departing Alien Income Tax Statement.
2,370,600	1545–1034	Passive Activity Credit Limitations.
40	1545–1093*	Final Minimum Tax-Tax Benefit Rule (TD 8416).
3,015,000	1545–1201	Election to Expense Certain Depreciable Business Assets.
100	1545–1244	T.D. 9013—Limitation on Passive Activity Losses and Credits—Treatment on Self-Charged Items of Income and Expense.
16,600	1545–1384	Form 3911—Taxpayer Statement Regarding Refund.

APPENDIX C—Continued

OMB numbers that will no longer be separately reported in order to eliminate duplicate burden reporting. For individual filers, the following OMB numbers are or will be retired resulting in a total reduction of 94,011,246 reported burden hours:

Burden hours	OMB No.	Title/description
5,000	1545–1452	FI–43–94 (TD 8649—Final)—Regulations Under Section 1258 of the Internal Revenue Code of 1986; Netting Rule for Certain Conversion Transactions.
1,975,000	1545–1464	TD 8960 (Final)—Deductibility, Substantiation, and Disclosure of Certain Charitable Contributions.
316,000	1545–1596	Form 8857.
125,000	1545–1616	TD 8816 (Final)—Roth IRAs.
17,824,793	1545–1629*	Paid Preparer's Due Diligence Checklist.
24,100	1545–1649	Rev. Proc. 99–21, Disability Suspension.
1,729	1545–1763	Form 8302—Electronic Deposit of Tax Refund of $1 Million or more.
10,000	1545–1773	Revenue Procedure 2014–55, Election Procedures and Information Reporting with Respect to Interests in Certain Canadian Retirement Plans.
800	1545–1816	TD 9054—Disclosure of Returns and Return Information to Designee of Taxpayer (as amended by TD 9618).
300,000	1545–1930	T.D. 9248—Residence and Source Rules Involving U.S. Possessions and Other Conforming Changes (Final and Temporary).
430	1545–1956*	Rev. Proc. 2007–25, Revenue Procedure regarding I.R.C. 6707A(e) and Disclosure with the SEC.
1,027,515	1545–1973*	Net Profit from Business.
72,201,704	1545–1974*	Schedule C (Form 1040), Profit or Loss From Business.
400	1545–2018	Revenue Procedure 2006–31, Revocation of Election filed under I.R.C. 83(b).
3,700	1545–2115*	TD 9481—Travel Expenses of State Legislators (REG–119518–07).
514,836	1545–2139	Identity Theft Affidavit.
2,039	1545–2152	The Health Coverage Tax Credit (HCTC) Reimbursement Request Form.
6,200	1545–2169	Notice 2010–30/Notice 2012–41—Transitional Guidance for Taxpayers Claiming Relief Under the Military Spouses Residency Relief Act for Taxable Year 2009 and Subsequent Years.
1,652,000	1545–2195	Form 8938 Statement of Specified Foreign Financial Assets.
94,011,246	Total Burden hours (or to be) discontinued.	

* Discontinued in FY19.

[FR Doc. 2019–21066 Filed 9–27–19; 8:45 am]

BILLING CODE 4830–01–P

DEPARTMENT OF THE TREASURY

Internal Revenue Service

Proposed Collection; Comment Request for Forms 1065, 1066, 1120, 1120–C, 1120–F, 1120–H, 1120–ND, 1120–S, 1120–SF, 1120–FSC, 1120–L, 1120–PC, 1120–REIT, 1120–RIC, 1120–POL, and Related Attachments

AGENCY: Internal Revenue Service (IRS), Treasury.

ACTION: Notice and request for comments.

SUMMARY: The Internal Revenue Service, as part of its continuing effort to reduce paperwork and respondent burden, invites the general public and other Federal agencies to take this opportunity to comment on proposed and/or continuing information collections, as required by the Paperwork Reduction Act of 1995 (PRA). The IRS is soliciting comments on forms used by business entity taxpayers:

Forms 1065, 1066, 1120, 1120–C, 1120–F, 1120–H, 1120–ND, 1120–S, 1120–SF, 1120–FSC, 1120–L, 1120–PC, 1120–REIT, 1120–RIC, 1120–POL; and related attachments to these forms (see the Appendix to this notice).

DATES: Written comments should be received on or before November 29, 2019 to be assured of consideration.

ADDRESSES: Direct all written comments to Laurie Brimmer, Internal Revenue Service, Room 6526, 1111 Constitution Avenue NW, Washington, DC 20224.

FOR FURTHER INFORMATION CONTACT: Requests for additional information or copies of the form and instructions should be directed to Sara Covington, at (202) 317–6038, Internal Revenue Service, Room 6526, 1111 Constitution Avenue NW, Washington, DC 20224, or through the internet, at *Sara.L.Covington@irs.gov.*

SUPPLEMENTARY INFORMATION: Today, over 90 percent of all business entity tax returns are prepared using software by the taxpayer or with preparer assistance.

These are forms used by business taxpayers. These include Forms *1065, 1066, 1120, 1120–C, 1120–F, 1120–H, 1120–ND, 1120–S, 1120–SF, 1120–FSC, 1120–L, 1120–PC, 1120–REIT, 1120–RIC, 1120–POL,* and related schedules, that business entity taxpayers attach to their tax returns (see Appendix A for this notice). In addition, there are numerous OMB numbers that report burden already included in this OMB number. In order to eliminate this duplicative burden reporting, 163 OMB numbers are being obsoleted. See Appendix B for information on the obsoleted OMB numbers and the burden that was previously reported under those numbers.

Tax Compliance Burden

Tax compliance burden is defined as the time and money taxpayers spend to comply with their tax filing responsibilities. Time-related activities include recordkeeping, tax planning, gathering tax materials, learning about the law and what you need to do, and completing and submitting the return. Out-of-pocket costs include expenses such as purchasing tax software, paying a third-party preparer, and printing and postage. Tax compliance burden does not include a taxpayer's tax liability, economic inefficiencies caused by sub-optimal choices related to tax deductions or credits, or psychological costs.

Proposed PRA Submission to OMB

Title: U.S. Business Income Tax Return.

OMB Number: 1545–0123.

Form Numbers: Forms 1065, 1066, 1120, 1120–C, 1120–F, 1120–H, 1120–ND, 1120–S, 1120–SF, 1120–FSC, 1120–L, 1120–PC, 1120–REIT, 1120–RIC, 1120–POL and all attachments to these forms (see the Appendix to this notice).

Abstract: These forms are used by businesses to report their income tax liability.

Current Actions: The change in estimated aggregate compliance burden can be explained by three major sources—technical adjustments, statutory changes, and discretionary agency (IRS) actions. This estimate is preliminary and reflects only the change in burden related to technical adjustments related to updating the number of affected taxpayers to reflect the FY2020 forecast.

Type of Review: Revision of currently approved collections.

Affected Public: Corporations and Pass-Through Entities.

Estimated Number of Respondents: 11,300,000.

Total Estimated Time: 3.162 billion hours.

Estimated Time per Respondent: 279.82 hours.

Total Estimated Out-of-Pocket Costs: $58.242 billion.

Estimated Out-of-Pocket Cost per Respondent: $5,154 .

Total Monetized Burden: 180,784 billion.

Estimated Total Monetized Burden per Respondent: $15,998.

Note: Amounts below are for preliminary estimates for FY2020. Reported time and cost burdens are national averages and do not necessarily reflect a ''typical'' case. Most taxpayers experience lower than average burden, with taxpayer burden varying considerably by taxpayer type. Detail may not add due to rounding.

PRELIMINARY FISCAL YEAR 2020 ICB ESTIMATES FOR FORM 1120 AND 1065 SERIES OF RETURNS AND RELATED FORMS AND SCHEDULES

	FY19	Program change due to adjustment	FY20
Number of Taxpayers	11,300,000		11,300,000
Burden in Hours	3,157,000,000	5,000,000	3,162,000,000
Burden in Dollars	58,148,000,000	94,000,000	58,242,000,000
Monetized Total Burden	180,493,000,000	291,000,000	180,784,000,000

Source RAAS:KDA 09/03/2019.

An agency may not conduct or sponsor, and a person is not required to respond to, a collection of information unless the collection of information displays a valid OMB Control Number.

Books or records relating to a collection of information must be retained as long as their contents may become material in the administration of any internal revenue law. Generally, tax returns and tax return information are confidential, as required by 26 U.S.C. 6103.

Request for Comments

Comments submitted in response to this notice will be summarized and/or included in the request for OMB approval. All comments will become a matter of public record. Comments are invited on: (a) Whether the collection of information is necessary for the proper performance of the functions of the agency, including whether the information will have practical utility; (b) the accuracy of the agency's estimate of the burden of the collection of information; (c) ways to enhance the quality, utility, and clarity of the information to be collected; (d) ways to minimize the burden of the collection of information on respondents, including through the use of automated collection techniques or other forms of information technology; and (e) estimates of capital or start-up costs and costs of operation, maintenance, and purchase of services to provide information.

Approved: September 23, 2019.

Laurie Brimmer,

Senior Tax Analyst.

Appendix A

Product	Title
Form 1042	Annual Withholding Tax Return for U.S. Source Income of Foreign Persons.
Form 1042–S	Foreign Person's U.S. Source Income Subject to Withholding.
Form 1042–T	Annual Summary and Transmittal of Forms 1042–S.
Form 1065	U.S. Return of Partnership Income.
Form 1065 (SCH B–1)	Information for Partners Owning 50% or More of the Partnership.
Form 1065 (SCH B–2)	Election Out of the Centralized Partnership Audit Regime.
Form 1065 (SCH C)	Additional Information for Schedule M–3 Filers.
Form 1065 (SCH D)	Capital Gains and Losses.
Form 1065 (SCH K–1)	Partner's Share of Income, Deductions, Credits, etc.
Form 1065 (SCH M–3)	Net Income (Loss) Reconciliation for Certain Partnerships.
Form 1065X	Amended Return or Administrative Adjustment Request (AAR).
Form 1066	U.S. Real Estate Mortgage Investment Conduit (REMIC) Income Tax Return.
Form 1066 (SCH Q)	Quarterly Notice to Residual Interest Holder of REMIC Taxable Income or Net Loss Allocation.
Form 1118	Foreign Tax Credit-Corporations.
Form 1118 (SCH I)	Reduction of Foreign Oil and Gas Taxes.
Form 1118 (SCH J)	Adjustments to Separate Limitation Income (Loss) Categories for Determining Numerators of Limitation Fractions, Year-End Recharacterization Balances, and Overall Foreign and Domestic Loss Account Balances.
Form 1118 (SCH K)	Foreign Tax Carryover Reconciliation Schedule.
Form 1120	U.S. Corporation Income Tax Return.
Form 1120 (SCH B)	Additional Information for Schedule M–3 Filers.
Form 1120 (SCH D)	Capital Gains and Losses.
Form 1120 (SCH G)	Information on Certain Persons Owning the Corporation's Voting Stock.
Form 1120 (SCH H)	Section 280H Limitations for a Personal Service Corporation (PSC).
Form 1120 (SCH M–3)	Net Income (Loss) Reconciliation for Corporations With Total Assets of $10 Million of More.
Form 1120 (SCH N)	Foreign Operations of U.S. Corporations.

Product	Title
Form 1120 (SCH O)	Consent Plan and Apportionment Schedule for a Controlled Group.
Form 1120 (SCH PH)	U.S. Personal Holding Company (PHC) Tax.
Form 1120 (SCH UTP)	Uncertain Tax Position Statement.
Form 1120–C	U.S. Income Tax Return for Cooperative Associations.
Form 1120F	U.S. Income Tax Return of a Foreign Corporation.
Form 1120–F (SCH H)	Deductions Allocated to Effectively Connected Income Under Regulations Section 1.861–8.
Form 1120–F (SCH I)	Interest Expense Allocation Under Regulations Section 1.882–5.
Form 1120–F (SCH M1 & M2)	Reconciliation of Income (Loss) and Analysis of Unappropriated Retained Earnings per Books.
Form 1120–F (SCH M–3)	Net Income (Loss) Reconciliation for Foreign Corporations With Reportable Assets of $10 Million or More.
Form 1120–F (SCH P)	List of Foreign Partner Interests in Partnerships.
Form 1120–F(SCH S)	Exclusion of Income From the International Operation of Ships or Aircraft Under Section 883.
Form 1120–F (SCH V)	List of Vessels or Aircraft, Operators, and Owners.
Form 1120–FSC	U.S. Income Tax Return of a Foreign Sales Corporation.
Form 1120FSC (SCH P)	Transfer Price or Commission.
Form 1120H	U.S. Income Tax Return for Homeowners Associations.
Form 1120–IC–DISC	Interest Charge Domestic International Sales Corporation Return.
Form 1120–IC–DISC (SCH K)	Shareholder's Statement of IC–DISC Distributions.
Form 1120–IC–DISC (SCH P)	Intercompany Transfer Price or Commission.
Form 1120–IC–DISC (SCH Q)	Borrower's Certificate of Compliance With the Rules for Producer's Loans.
Form 1120–L	U.S. Life Insurance Company Income Tax Return.
Form 1120–L (SCH M–3)	Net Income (Loss) Reconciliation for U.S. Life Insurance Companies With Total Assets of $10 Million or More.
Form 1120–ND *	Return for Nuclear Decommissioning Funds and Certain Related Persons.
Form 1120–PC	U.S. Property and Casualty Insurance Company Income Tax Return.
Form 1120–PC (SCH M–3)	Net Income (Loss) Reconciliation for U.S. Property and Casualty Insurance Companies With Total Assets of $10 Million or More.
Form 1120–POL	U.S. Income Tax Return for Certain Political Organizations.
Form 1120–REIT	U.S. Income Tax Return for Real Estate Investment Trusts.
Form 1120–RIC	U.S. Income Tax Return for Regulated Investment Companies.
Form 1120S	U.S. Income Tax Return for an S Corporation.
Form 1120S (SCH B–1)	Information on Certain Shareholders of an S Corporation.
Form 1120S (SCH D)	Capital Gains and Losses and Built-In Gains.
Form 1120S (SCH K–1)	Shareholder's Share of Income, Deductions, Credits, etc.
Form 1120S (SCH M–3)	Net Income (Loss) Reconciliation for S Corporations With Total Assets of $10 Million or More.
Form 1120–SF	U.S. Income Tax Return for Settlement Funds (Under Section 468B).
Form 1120–W	Estimated Tax for Corporations.
Form 1120–X	Amended U.S. Corporation Income Tax Return.
Form 1122	Authorization and Consent of Subsidiary Corporation to be Included in a Consolidated Income Tax Return.
Form 1125–A	Cost of Goods Sold.
Form 1125–E	Compensation of Officers.
Form 1127	Application for Extension of Time for Payment of Tax Due to Undue Hardship.
Form 1128	Application to Adopt, Change, or Retain a Tax Year.
Form 1138	Extension of Time For Payment of Taxes By a Corporation Expecting a Net Operating Loss Carryback.
Form 1139	Corporation Application for Tentative Refund.
Form 2220	Underpayment of Estimated Tax By Corporations.
Form 2438	Undistributed Capital Gains Tax Return.
Form 2439	Notice to Shareholder of Undistributed Long-Term Capital Gains.
Form 2553	Election by a Small Business Corporation.
Form 2848	Power of Attorney and Declaration of Representative.
Form 3115	Application for Change in Accounting Method.
Form 3468	Investment Credit.
Form 3520	Annual Return To Report Transactions With Foreign Trusts and Receipt of Certain Foreign Gifts.
Form 3520–A	Annual Return of Foreign Trust With a U.S. Owner.
Form 3800	General Business Credit.
Form 4136	Credit for Federal Tax Paid on Fuels.
Form 4255	Recapture of Investment Credit.
Form 4466	Corporation Application for Quick Refund of Overpayment of Estimated Tax.
Form 4562	Depreciation and Amortization (Including Information on Listed Property).
Form 4684	Casualties and Thefts.
Form 4797	Sales of Business Property.
Form 4810	Request for Prompt Assessment Under Internal Revenue Code Section 6501(d).
Form 4876A	Election to Be Treated as an Interest Charge DISC.
Form 5452	Corporate Report of Nondividend Distributions.
Form 5471	Information Return of U.S. Persons With Respect To Certain Foreign Corporations.
Form 5471 (SCH E)	Income, War Profits, and Excess Profits Taxes Paid or Accrued.
Form 5471 (SCH H)	Current Earnings and Profits.
Form 5471 (SCH I–1)	Information for Global Intangible Low-Taxed Income.
Form 5471 (SCH J)	Accumulated Earnings and Profits (E&P) of Controlled Foreign Corporation.
Form 5471 (SCH M)	Transactions Between Controlled Foreign Corporation and Shareholders or Other Related Persons.
Form 5471 (SCH O)	Organization or Reorganization of Foreign Corporation, and Acquisitions and Dispositions of its Stock.

Product	Title
Form 5471 (SCH P)	Previously Taxed Earnings and Profits of U.S. Shareholder of Certain Foreign Corporations.
Form 5472	Information Return of a 25% Foreign-Owned U.S. Corporation or a Foreign Corporation Engaged in a U.S. Trade or Business.
Form 56	Notice Concerning Fiduciary Relationship.
Form 56F	Notice Concerning Fiduciary Relationship of Financial Institution.
Form 5713	International Boycott Report.
Form 5713 (SCH A)	International Boycott Factor (Section 999(c)(1)).
Form 5713 (SCH B)	Specifically Attributable Taxes and Income (Section 999(c)(2)).
Form 5713 (SCH C)	Tax Effect of the International Boycott Provisions.
Form 5735	American Samoa Economic Development Credit.
Form 5735 Schedule P	Allocation of Income and Expenses Under Section 936(h)(5).
Form 5884	Work Opportunity Credit.
Form 5884–A	Credits for Affected Midwestern Disaster Area Employers (for Employers Affected by Hurricane Harvey, Irma, or Maria or Certain California Wildfires).
Form 6198	At-Risk Limitations.
Form 6478	Biofuel Producer Credit.
Form 6627	Environmental Taxes.
Form 6765	Credit for Increasing Research Activities.
Form 6781	Gains and Losses From Section 1256 Contracts and Straddles.
Form 7004	Application for Automatic Extension of Time To File Certain Business Income Tax, Information, and Other Returns.
Form 8023	Elections Under Section 338 for Corporations Making Qualified Stock Purchases.
Form 8050	Direct Deposit Corporate Tax Refund.
Form 8082	Notice of Inconsistent Treatment or Administrative Adjustment Request (AAR).
Form 8275	Disclosure Statement.
Form 8275R	Regulation Disclosure Statement.
Form 8283	Noncash Charitable Contributions.
Form 8288	U.S. Withholding Tax Return for Dispositions by Foreign Persons of U.S. Real Property Interests.
Form 8288A	Statement of Withholding on Dispositions by Foreign Persons of U.S. Real Property Interests.
Form 8288B	Application for Withholding Certificate for Dispositions by Foreign Persons of U.S. Real Property Interests.
Form 8300	Report of Cash Payments Over $10,000 Received In a Trade or Business.
Form 8302	Electronic Deposit of Tax Refund of $1 Million or More.
Form 8308	Report of a Sale or Exchange of Certain Partnership Interests.
Form 8329	Lender's Information Return for Mortgage Credit Certificates (MCCs).
Form 8404	Interest Charge on DISC-Related Deferred Tax Liability.
Form 8453–C	U.S. Corporation Income Tax Declaration for an IRS e-file Return.
Form 8453–I	Foreign Corporation Income Tax Declaration for an IRS e-file Return.
Form 8453–PE	U.S. Partnership Declaration for an IRS e-file Return.
Form 8453–S	U.S. S Corporation Income Tax Declaration for an IRS e-file Return.
Form 851	Affiliations Schedule.
Form 8586	Low-Income Housing Credit.
Form 8594	Asset Acquisition Statement Under Section 1060.
Form 8609	Low-Income Housing Credit Allocation and Certification.
Form 8609–A	Annual Statement for Low-Income Housing Credit.
Form 8611	Recapture of Low-Income Housing Credit.
Form 8621	Information Return By Shareholder of a Passive Foreign Investment Company or Qualified Electing Fund.
Form 8621–A	Return by a Shareholder Making Certain Late Elections to End Treatment as a Passive Foreign Investment Company.
Form 8655	Reporting Agent Authorization.
Form 8697	Interest Computation Under the Look-Back Method for Completed Long-Term Contracts.
Form 8703	Annual Certification of a Residential Rental Project.
Form 8716	Election To Have a Tax Year Other Than a Required Tax Year.
Form 8752	Required Payment or Refund Under Section 7519.
Form 8804	Annual Return for Partnership Withholding Tax (Section 1446).
Form 8804 (SCH A)	Penalty for Underpayment of Estimated Section 1446 Tax for Partnerships.
Form 8804–C	Certificate of Partner-Level Items to Reduce Section 1446 Withholding.
Form 8804–W	Installment Payments of Section 1446 Tax for Partnerships.
Form 8805	Foreign Partner's Information Statement of Section 1446 Withholding tax.
Form 8806	Information Return for Acquisition of Control or Substantial Change in Capital Structure.
Form 8810	Corporate Passive Activity Loss and Credit Limitations.
Form 8813	Partnership Withholding Tax Payment Voucher (Section 1446).
Form 8816	Special Loss Discount Account and Special Estimated Tax Payments for Insurance Companies.
Form 8819	Dollar Election Under Section 985.
Form 8820	Orphan Drug Credit.
Form 8822B	Change of Address—Business.
Form 8824	Like-Kind Exchanges.
Form 8825	Rental Real Estate Income and Expenses of a Partnership or an S Corporation.
Form 8826	Disabled Access Credit.
Form 8827	Credit for Prior Year Minimum Tax-Corporations.
Form 8830	Enhanced Oil Recovery Credit.
Form 8832	Entity Classification Election.
Form 8833	Treaty-Based Return Position Disclosure Under Section 6114 or 7701(b).

Product	Title
Form 8834	Qualified Electric Vehicle Credit.
Form 8835	Renewable Electricity, Refined Coal, and Indian Coal Production Credit.
Form 8838	Consent to Extend the Time To Assess Tax Under Section 367-Gain Recognition Agreement.
Form 8838–P	Consent To Extend the Time To Assess Tax Pursuant to the Gain Deferral Method (Section 721(c)).
Form 8842	Election to Use Different Annualization Periods for Corporate Estimated Tax.
Form 8844	Empowerment Zone Employment Credit.
Form 8845	Indian Employment Credit.
Form 8846	Credit for Employer Social Security and Medicare Taxes Paid on Certain Employee Tips.
Form 8848	Consent to Extend the Time to Assess the Branch Profits Tax Under Regulations Sections 1.884–2(a) and (c).
Form 8858	Information Return of U.S. Persons With Respect to Foreign Disregarded Entities (FDEs) and Foreign Branches (FBs).
Form 8858 (SCH M)	Transactions Between Foreign Disregarded Entity of a Foreign Tax Owner and the Filer or Other Related Entities.
Form 8864	Biodiesel and Renewable Diesel Fuels Credit.
Form 8865	Return of U.S. Persons With Respect to Certain Foreign Partnerships.
Form 8865 (SCH G)	Statement of Application for the Gain Deferral Method Under Section 721(c).
Form 8865 (SCH H)	Acceleration Events and Exceptions Reporting Relating to Gain Deferral Method Under Section 721 (c).
Form 8865 (SCH K–1)	Partner's Share of Income, Deductions, Credits, etc.
Form 8865 (SCH O)	Transfer of Property to a Foreign Partnership.
Form 8865 (SCH P)	Acquisitions, Dispositions, and Changes of Interests in a Foreign Partnership.
Form 8866	Interest Computation Under the Look-Back Method for Property Depreciated Under the Income Forecast Method.
Form 8869	Qualified Subchapter S Subsidiary Election.
Form 8873	Extraterritorial Income Exclusion.
Form 8874	New Markets Credit.
Form 8875	Taxable REIT Subsidiary Election.
Form 8878–A	IRS e-file Electronic Funds Withdrawal Authorization for Form 7004.
Form 8879–C	IRS e-file Signature Authorization for Form 1120.
Form 8879–I	IRS e-file Signature Authorization for Form 1120–F.
Form 8879–PE	IRS e-file Signature Authorization for Form 1065.
Form 8879–S	IRS e-file Signature Authorization for Form 1120S.
Form 8881	Credit for Small Employer Pension Plan Startup Costs.
Form 8882	Credit for Employer-Provided Childcare Facilities and Services.
Form 8883	Asset Allocation Statement Under Section 338.
Form 8886	Reportable Transaction Disclosure Statement.
Form 8896	Low Sulfur Diesel Fuel Production Credit.
Form 8900	Qualified Railroad Track Maintenance Credit.
Form 8902	Alternative Tax on Qualified Shipping Activities.
Form 8903	Domestic Production Activities Deduction.
Form 8906	Distilled Spirits Credit.
Form 8908	Energy Efficient Home Credit.
Form 8910	Alternative Motor Vehicle Credit.
Form 8911	Alternative Fuel Vehicle Refueling Property Credit.
Form 8912	Credit to Holders of Tax Credit Bonds.
Form 8916	Reconciliation of Schedule M–3 Taxable Income with Tax Return Taxable Income for Mixed Groups.
Form 8916–A	Supplemental Attachment to Schedule M–3.
Form 8918	Material Advisor Disclosure Statement.
Form 8923	Mining Rescue Team Training Credit.
Form 8925	Report of Employer-Owned Life Insurance Contracts.
Form 8927	Determination Under Section 860(e)(4) by a Qualified Investment Entity.
Form 8932	Credit for Employer Differential Wage Payments.
Form 8933	Carbon Oxide Sequestration Credit.
Form 8936	Qualified Plug-In Electric Drive Motor Vehicle Credit.
Form 8937	Report of Organizational Actions Affecting Basis of Securities.
Form 8938	Statement of Foreign Financial Assets.
Form 8941	Credit for Small Employer Health Insurance Premiums.
Form 8947	Report of Branded Prescription Drug Information.
Form 8966	FATCA Report.
Form 8966–C	Cover Sheet for Form 8966 Paper Submissions.
Form 8979	Partnership Representative Revocation/Resignation and Designation.
Form 8990	Limitation on Business Interest Expense IRC 163(j).
Form 8991	Tax on Base Erosion Payments of Taxpayers with Substantial Gross Receipts.
Form 8992	U.S Shareholder Calculation of Global Intangible Low-Taxed Income (GILTI).
Form 8993	Section 250 Deduction for Foreign-Derived Intangible Income (FDII) and Global Intangible Low-Taxed Income (GILTI).
Form 8994	Employer Credit for Paid Family and Medical Leave.
Form 8996	Qualified Opportunity Fund.
Form 926	Return by a U.S. Transferor of Property to a Foreign Corporation.
Form 965	Inclusion of Deferred Foreign Income Upon Transition to Participation Exemption System.
Form 965–B	Corporate and Real Estate Investment Trust (REIT) Report of Net 965 Tax Liability and REIT Report of Net 965 Inclusion.
Form 965 (SCH–A)	U.S. Shareholder's Section 965(a) Inclusion Amount.

Product	Title
Form 965 (SCH–B)	Deferred Foreign Income Corporation's Earnings and Profits (E&P).
Form 965 (SCH–C)	U.S. Shareholder's Aggregate Foreign Earnings and Profits Deficit.
Form 965 (SCH–D)	U.S. Shareholder's Aggregate Foreign Cash Position.
Form 965 (SCH–E)	U.S. Shareholder's Aggregate Foreign Cash Position Detail.
Form 965 (SCH–F)	Foreign Taxes Deemed Paid by Domestic Corporation (for U.S. Shareholder Tax).
Form 965 (SCH–G)	Foreign Taxes Deemed Paid by Domestic Corporation (for U.S. Shareholder Tax Year Ending in 2017).
Form 965 (SCH–H)	Disallowance of Foreign Tax Credit and Amounts Reported on Forms 1116 and 1118.
Form 966	Corporate Dissolution or Liquidation.
Form 970	Application to Use LIFO Inventory Method.
Form 972	Consent of Shareholder to Include Specific Amount in Gross Income.
Form 973	Corporation Claim for Deduction for Consent Dividends.
Form 976	Claim for Deficiency Dividends Deductions by a Personal Holding Company, Regulated Investment Company, or Real Estate Investment Trust.
Form 982	Reduction of Tax Attributes Due to Discharge of Indebtedness (and Section 1082 Basis Adjustment).
Form SS–4	Application for Employer Identification Number.
Form SS–4PR	Solicitud de Número de Identificación Patronal (EIN).
Form T (TIMBER)	Forest Activities Schedule.
Form W–8BEN	Certificate of Foreign Status of Beneficial Owner for United States Tax Withholding (Individual).
Form W–8BEN(E)	Certificate of Entities Status of Beneficial Owner for United States Tax Withholding (Entities).
Form W–8ECI	Certificate of Foreign Person's Claim That Income is Effectively Connected With the Conduct of a Trade or Business in the United States.
Form W–8IMY	Certificate of Foreign Intermediary, Foreign Flow-Through Entity, or Certain U.S. Branches for United States Tax Withholding.

Appendix B

OMB numbers that will no longer be separately reported in order to eliminate duplicate burden reporting. For business filers, the following OMB numbers are or will be retired resulting in a total reduction of 48,912,072 reported burden hours.

Burden hours	OMB No.	Title
1,005	1545–0731	Definition of an S Corporation.
41	1545–0746	LR–100–78 (Final) Creditability of Foreign Taxes.
205	1545–0755	Related Group Election With Respect to Qualified Investments in Foreign Base Company Shipping Operations.
37,922,688	1545–0771*	TD 8864 (Final); EE–63–88 (Final and temp regulations) Taxation of Fringe Benefits and Exclusions From Gross Income for Certain Fringe Benefits; IA–140–86 (Temporary) Fringe Benefits Treas reg 1.274.
3,104	1545–0807	(TD 7533) Final, DISC Rules on Procedure and Administration; Rules on Export Trade Corporations, and (TD 7896) Final, Income from Trade Shows.
8,125	1545–0879	TD 8426—Certain Returned Magazines, Paperbacks or Records (IA–195–78).
978	1545–1018	FI–27–89 (Temporary and Final) Real Estate Mortgage Investment Conduits; Reporting Requirements and Other Administrative Matters; FI–61–91 (Final) Allocation of Allocable Investment.
1,025	1545–1041	TD 8316 Cooperative Housing Corporations.
50,417	1545–1068	T.D. 8618—Definition of a Controlled Foreign Corporation, Foreign Base Company Income, and Foreign Personal Holding Company Income of a Controlled Foreign Corporation (INTL–362–88).
12,694	1545–1070	Effectively connected income and the branch profits tax.
3,250	1545–1072	INTL–952–86 (Final—TD 8410) and TD 8228 Allocation and Apportionment of Interest Expense and Certain Other Expenses.
1,620	1545–1083*	Treatment of Dual Consolidated Losses.
40	1545–1093	Final Minimum Tax-Tax Benefit Rule (TD 8416),
4,008	1545–1102	PS–19–92 (TD 9420—Final) Carryover Allocations and Other Rules Relating to the Low-Income Housing Credit.
19,830	1545–1130*	Special Loss Discount Account and Special Estimated Tax Payments for Insurance Companies.
1,500	1545–1138	TD–8350 (Final) Requirements For Investments to Qualify under Section 936(d)(4) as Investments in Qualified Caribbean Basin Countries.
70	1545–1146*	Applicable Conventions Under the Accelerated Cost.
640,000	1545–1191	Information with Respect to Certain Foreign-Owned Corporations—IRC Section 6038A.
662	1545–1218	CO–25–96 (TD 8824—Final) Regulations Under Section 1502 of the Internal Revenue Code of 1986; Limitations on Net Operating Loss Carryforwards and Certain Built-in Losses and Credits Following.
1,000	1545–1224	T. D. 8337 (Final) Allocation and Apportionment of Deduction for State Income Taxes (INTL–112–88).
1,000	1545–1233*	Adjusted Current Earnings (IA–14–91)(Final).
2,000	1545–1237*	REG–209831–96 (TD 8823) Consolidated Returns—Limitation on the Use of Certain Losses and Deductions.
49,950	1545–1251*	TD 8437—Limitations on Percentage Depletion in the Case of Oil and Gas Wells.
50	1545–1254	TD 8396—Conclusive Presumption of Worthlessness of Debts Held by Banks (FI–34–91).
1	1545–1260*	CO–62–89 (Final) Final Regulations under Section 382 of the Internal Revenue Code of 1986; Limitations on Corporate Net Operating Loss Carryfowards.

Burden hours	OMB No.	Title
2,390	1545–1271	Treatment of transfers of stock or securities to foreign corporations.
200	1545–1275	Limitations on net operating loss carryforwards and certain built-in losses following ownership change.
2,070	1545–1287	FI–3–91 (TD 8456—Final) Capitalization of Certain Policy Acquisition Expenses.
625	1545–1290	TD 8513—Bad Debt Reserves of Banks.
3,542	1545–1299	TD 8459—Settlement Funds.
2,200	1545–1300	Treatment of Acquisition of Certain Financial Institutions: Certain Tax Consequences of Federal Financial Assistance to Financial Institutions.
322	1545–1308	TD 8449 (Final) Election, Revocation, Termination, and Tax Effect of Subchapter S Status.
63	1545–1324	CO–88–90 (TD 8530) Limitation on Net Operating Loss Carryforwards and Certain Built-in Losses Following Ownership Change; Special Rule for Value of a Loss Corporation Under the Jurisdiction.
5	1545–1338	Election Out of Subchapter K for Producers of Natural Gas—TD 8578.
18,600	1545–1344*	TD 8560 (CO–30–92) Consolidated Returns—Stock Basis and Excess Loss Accounts, Earnings and Profits, Absorption of Deductions and Losses, Joining and Leaving Consolidated Groups, Worthless (Final).
2,000	1545–1352	TD 8586 (Final) Treatment of Gain From Disposition of Certain Natural Resource Recapture Property.
104,899	1545–1357	PS–78–91 (TD 8521)(TD 8859) Procedures for Monitoring Compliance with Low-Income Housing Credit Requirements; PS–50–92 Rules to Carry Out the Purposes of Section 42 and for Correcting.
9,350	1545–1364	Methods to Determine Taxable Income in connection with a Cost Sharing Arrangement—IRC Section 482.
20,000	1545–1412	FI–54–93 (Final) Clear Reflection of Income in the Case of Hedging Transactions.
4,332	1545–1417*	Form 8845—Indian Employment Credit.
1,050	1545–1433	Consolidated and Controlled Groups—Intercompany Transactions and Related Rules.
875	1545–1434	CO–26–96 (Final) Regulations Under Section 382 of the Internal Revenue Code of 1986; Application of Section 382 in Short Taxable Years and With Respect to Controlled Groups.
333	1545–1438	TD 8643 (Final) Distributions of Stock and Stock Rights.
10,000	1545–1440	TD 8611, Conduit Arrangements Regulations—Final (INTL–64–93).
2,000	1545–1447*	CO–46–94 (TD 8594—Final) Losses on Small Business Stock.
1,250	1545–1476	Source of Income From Sales of Inventory and Natural Resources Produced in One Jurisdiction and Sold in Another Jurisdiction.
171,050	1545–1480	TD 8985—Hedging Transactions.
2,500	1545–1491	TD 8746—Amortizable Bond Premium.
1,000	1545–1493	TD 8684—Treatment of Gain From the Disposition of Interest in Certain Natural Resource Recapture Property by S Corporations and Their Shareholders.
212,500	1545–1507	(TD 8701)—Treatment of Shareholders of Certain Passive Investment Companies; (TD 8178)—Passive Foreign Investment Companies.
326,436	1545–1522*	Revenue Procedure 2017–52, 2017–1, 2017–3 Rulings and determination letters.
10,467	1545–1530	Rev. Proc. 2007–32—Tip Rate Determination Agreement (Gaming Industry); Gaming Industry Tip Compliance Agreement Program.
10,000	1545–1539*	REG–208172–91 (TD 8787—final) Basis Reduction Due to Discharge of Indebtedness.
18,553	1545–1541*	Revenue Procedure 97–27, Changes in Methods of Accounting.
278,622	1545–1546*	Revenue Procedure 97–33, EFTPS (Electronic Federal Tax Payment System).
50,000	1545–1548*	Rev. Proc. 2013–30, Uniform Late S Corporation Election Revenue Procedure.
296,896	1545–1549	Tip Reporting Alternative Commitment (TRAC) Agreement and Tip Rate Determination (TRDA) for Use in the Food and Beverage Industry.
30,580	1545–1551	Changes in Methods of Accounting (RP 2016–29).
623	1545–1555	REG–115795–97 (Final) General Rules for Making and Maintaining Qualified Electing Fund Elections.
500	1545–1556	TD 8786—Source of Income From Sales of Inventory Partly From Sources Within a Possession of the U.S.; Also, Source of Income Derived From Certain Purchases From a Corp. Electing Sec. 936.
1,000	1545–1558	Rev. Proc. 98–46 (modifies Rev. Proc. 97–43)—Procedures for Electing Out of Exemptions Under Section 1.475(c)–1; and Rev. Rul. 97–39, Mark-to-Market Accounting Method for Dealers in Securities.
100,000	1545–1559	Revenue Procedures 98–46 and 97–44, LIFO Conformity Requirement.
2,000	1545–1566	Notice 2010–46, Prevention of Over-Withholding of U.S. Tax Avoidance With Respect to Certain Subst.
904,000	1545–1588	Adjustments Following Sales of Partnership Interests.
10,110	1545–1590*	REG–251698–96 (T.D. 8869—Final) Subchapter S Subsidiaries.
500	1545–1617*	REG–124069–02 (Final) Section 6038—Returns Required with Respect to Controlled Foreign Partnerships; REG–118966–97 (Final) Information Reporting with Respect to Certain Foreign Partnership.
3,000	1545–1634	TD 9595 (REG–141399–07) Consolidated Overall Foreign Losses, Separate Limitation Losses, and Overall Domestic Losses.
500	1545–1641	Rev. Proc. 99–17—Mark to Market Election for Commodities Dealers and Securities and Commodities Traders.
50	1545–1642	TD 8853 (Final), Recharacterizing Financing Arrangements Involving Fast-Pay Stock.
1	1545–1646	TD 8851—Return Requirement for United States Persons Acquiring or Disposing of an Interest in a Foreign Partnership, or Whose Proportional Interest in a Foreign Partnership Changes.
75	1545–1647*	Revenue Procedure 2001–21 Debt Roll-Ups.
1,620	1545–1657*	Revenue Procedure 99–32—Conforming Adjustments Subsequent to Section 482 Allocations.
25	1545–1658	Purchase Price Allocations in Deemed Actual Asset Acquisitions.

Burden hours	OMB No.	Title
10,000	1545–1661	Qualified lessee construction allowances for short-term leases.
1,500	1545–1671	REG–209709–94 (Final—TD 8865) Amortization of Intangible Property.
70	1545–1672	T.D. 9047—Certain Transfers of Property to Regulated Investment Companies (RICs) and Real Estate Investment Trusts (REITs).
470	1545–1675	Treatment of taxable income of a residual interest holder in excess of daily accruals.
23,900	1545–1677	Exclusions From Gross Income of Foreign Corporations.
13,134	1545–1684	Pre-Filing Agreements Program.
400	1545–1690*	Notice 2000–28, Coal Exports.
400	1545–1699	TD 9715; Rev. Proc. 2015–26 (Formerly TD 9002; Rev Proc 2002–43), Agent for Consolidated Group.
3,200	1545–1701	Revenue Procedure 2000–37—Reverse Like-kind Exchanges (as modified by Rev Proc. 2004–51).
2,000	1545–1706	TD 9315—Section 1503(d) Closing Agreement Requests.
1,800	1545–1711	TD 9273—Stock Transfer Rules: Carryover of Earnings and Taxes (REG–116050–99).
4,877	1545–1714	Tip Reporting Alternative Commitment (TRAC) for most industries.
870	1545–1716	Employer-Designed Tip Reporting Program for the Food and Beverage Industry (EmTRAC)—Notice 2001–1.
1,897	1545–1717	Tip Rate Determination Agreement (TRDA) for Most Industries.
1,250	1545–1718	Source of Income from Certain Space and Ocean Activities; Source of Communications Income (TD 9305—final).
15	1545–1730	Manner of making election to terminate tax-exempt bond financing.
19	1545–1731	Extraterritorial Income Exclusion Elections.
1,318	1545–1736	Advanced Insurance Commissions—Revenue Procedure 2001–24.
500	1545–1748	Changes in Accounting Periods—REG–106917–99 (TD 8669/Final).
5,950	1545–1752	Revenue Procedure 2008–38, Revenue Procedure 2008–39, Revenue Procedure 2008–40, Revenue Procedure 2008–41, Revenue Procedure 2008–42.
100,000	1545–1756	Revenue Procedure 2001–56, Demonstration Automobile Use.
530,090	1545–1765	T.D. 9171, New Markets Tax Credit.
500	1545–1768	Revenue Procedure 2003–84, Optional Election to Make Monthly Sec. 706 Allocations.
7,700	1545–1774	Extensions of Time to Elect Method for Determining Allowable Loss.
100	1545–1784	Rev Proc 2002–32 as Modified by Rev Proc 2006–21, Waiver of 60-month Bar on Reconsolidation after Disaffiliation.
600	1545–1786	Changes in Periods of Accounting.
300	1545–1799	Notice 2002–69, Interest Rates and Appropriate Foreign Loss Payment Patterns For Determining the Qualified Insurance Income of Certain Controlled Corporations under Section 954(f).
7,500	1545–1801*	Revenue Procedure 2002–67, Settlement of Section 351 Contingent Liability Tax Shelter Cases.
300	1545–1820	Revenue Procedure 2003–33, Section 9100 Relief for 338 Elections.
15,000	1545–1828*	TD 9048; 9254—Guidance under Section 1502; Suspension of Losses on Certain Stock Disposition (REG–131478–02).
100	1545–1831	TD 9157 (Final) Guidance Regarding the Treatment of Certain Contingent Payment Debt Instruments w/ one or more Payments that are Denominated in, or Determined by Reference to, a Nonfunctional Currency.
625	1545–1833*	Revenue Procedure 2003–37, Documentation Provisions for Certain Taxpayers Using the Fair Market Value Method of Interest Expense Apportionment.
8,600	1545–1834	Revenue Procedure 2003–39, Section 1031 LKE (Like-Kind Exchanges) Auto Leasing Programs.
2,000	1545–1837*	Revenue Procedure 2003–36, Industry Issue Resolution Program.
3,200	1545–1847	Revenue Procedure 2004–29—Statistical Sampling in Sec. 274 Context.
24,000	1545–1855*	TD 9285—Limitation on Use of the Nonaccrual-Experience Method of Accounting Under Section 448(d)(5).
50	1545–1861	Revenue Procedure 2004–19—Probable or Prospective Reserves Safe Harbor.
3,000	1545–1870	TD 9107—Guidance Regarding Deduction and Capitalization of Expenditures.
1,500	1545–1893	Rollover of Gain from Qualified Small Business Stock to Another Qualified Small Business Stock.
3,000	1545–1905	TD 9289 (Final) Treatment of Disregarded Entities Under Section 752.
200	1545–1906	TD 9210—LIFO Recapture Under Section 1363(d).
76,190	1545–1915	Notice 2005–4, Fuel Tax Guidance, as modified.
552,100	1545–1939	Notification Requirement for Transfer of Partnership Interest in Electing Investment Partnership (EIP).
52,182	1545–1945	26 U.S. Code § 475—Mark to market accounting method for dealers in securities.
2,765	1545–1946	T.D. 9315 (Final) Dual Consolidated Loss Regulations.
250	1545–1965	TD 9360 (REG–133446–03)(Final) Guidance on Passive Foreign Company (PFIC) Purging Elections.
1,985	1545–1983*	Qualified Railroad Track Maintenance Credit.
3,034,765	1545–1986*	Notice 2006–47, Elections Created or Effected by the American Jobs Creation Act of 2004.
12	1545–1990*	Application of Section 338 to Insurance Companies.
150	1545–2001*	Rev. Proc. 2006–16, Renewal Community Depreciation Provisions.
1,700	1545–2002*	Notice 2006–25 (superseded by Notice 2007–53), Qualifying Gasification Project Program.
4,950	1545–2003	Notice 2006–24, Qualifying Advanced Coal Project Program.
3,761	1545–2004	Deduction for Energy Efficient Commercial Buildings.
171,160	1545–2008*	Nonconventional Source Fuel Credit.
25	1545–2014*	TD 9452—Application of Separate Limitations to Dividends From Noncontrolled Section 902 Corporations.
500	1545–2017	Notice 2006–46 Announcement of Rules to be included in Final Regulations under Section 897(d) and (e) of the Internal Revenue Code.
375,000	1545–2019	TD 9451—Guidance Necessary To Facilitate Business Election Filing; Finalization of Controlled Group Qualification Rules (TD 9329).

Burden hours	OMB No.	Title
200	1545–2028	Fuel Cell Motor Vehicle Credit.
35	1545–2030	REG–120509–06 (TD 9465—Final), Determination of Interest Expense Deduction of Foreign Corporations.
100	1545–2036	Taxation and Reporting of REIT Excess Inclusion Income by REITs, RICs, and Other Pass-Through Entities (Notice 2006–97).
2,400	1545–2072	Revenue Procedure 2007–35—Statistical Sampling for Purposes of Section 199.
2,500	1545–2091	TD 9512 (Final)—Nuclear Decommissioning Funds.
25	1545–2096	Loss on Subsidiary Stock—REG–157711–02 (TD 9424—Final).
120	1545–2103	Election to Expense Certain Refineries.
3,000	1545–2110	REG–127770–07 (Final), Modifications of Commercial Mortgage Loans Held by a Real Estate Mortgage Investment Conduit.
26,000	1545–2114	S Corporation Guidance under AJCA of 2004 (TD 9422 Final—REG–143326–05).
389,330	1545–2122*	Form 8931—Agricultural Chemicals Security Credit.
1,000	1545–2125	REG–143544–04 Regulations Enabling Elections for Certain Transaction Under Section 336(e).
2,700	1545–2133*	Rev. Proc. 2009–16, Section 168(k)(4) Election Procedures and Rev. Proc. 2009–33, Section 168(k)(4) Extension Property Elections.
350	1545–2134*	Notice 2009–41—Credit for Residential Energy Efficient Property.
100	1545–2145	Notice 2009–52, Election of Investment Tax Credit in Lieu of Production Tax Credit; Coordination with Department of Treasury Grants for Specified Energy Property in Lieu of Tax Credits.
300,000	1545–2147	Internal Revenue Code Section 108(i) Election.
4,500	1545–2149	Treatment of Services Under Section 482; Allocation of Income and Deductions From Intangibles; Stewardship Expense (TD 9456).
250	1545–2150	Notice 2009–58, Manufacturers' Certification of Specified Plug-in Electric Vehicles.
550,000	1545–2151	Qualifying Advanced Energy Project Credit—Notice 2013–12.
180	1545–2153	Notice 2009–83—Credit for Carbon Dioxide Sequestration Under Section 45Q.
1,000	1545–2155*	TD 9469 (REG–102822–08) Section 108 Reduction of Tax Attributes for S Corporations.
36,000	1545–2156	Revenue Procedure 2010–13, Disclosure of Activities Grouped under Section 469.
1,500	1545–2158	Notice 2010–54: Production Tax Credit for Refined Coal.
5,988	1545–2165	Notice of Medical Necessity Criteria under the Mental Health Parity and Addiction Equity Act of 2008.
3,260	1545–2183	Transfers by Domestic Corporations That Are Subject to Section 367(a)(5); Distributions by Domestic Corporations That Are Subject to Section 1248(f). (TD 9614 & 9615).
694,750	1545–2186	TD 9504, Basis Reporting by Securities Brokers and Basis Determination for Stock; TD 9616, TD9713, and TD 9750.
1,000	1545–2194	Rules for Certain Rental Real Estate Activities.
1,800	1545–2209	REG–112805–10—Branded Prescription Drugs.
403,177	1545–2242	REG–135491–10—Updating of Employer Identification Numbers.
200	1545–2245	REG–160873–04—American Jobs Creation Act Modifications to Section 6708, Failure to Maintain List of Advisees With Respect to Reportable Transactions.
75,000	1545–2247	TD 9633—Limitations on Duplication of Net Built-in Losses.
400	1545–2259	Performance & Quality for Small Wind Energy Property.
1,800	1545–2276	Safe Harbor for Inadvertent Normalization Violations.
48,912,072	Total	

* Discontinued in FY19.

[FR Doc. 2019–21068 Filed 9–27–19; 8:45 am]

BILLING CODE 4830–01–P

DEPARTMENT OF VETERANS AFFAIRS

[OMB Control No. 2900–0144]

Agency Information Collection Activity: HUDVA Addendum to Uniform Residential Loan Application

AGENCY: Veterans Benefits Administration; Department of Veterans Affairs.

ACTION: Notice.

SUMMARY: Veterans Benefits Administration, Department of Veterans Affairs (VA), is announcing an opportunity for public comment on the proposed collection of certain information by the agency. Under the Paperwork Reduction Act (PRA) of 1995, Federal agencies are required to publish notice in the **Federal Register** concerning each proposed collection of information, including each proposed extension of a currently approved collection, and allow 60 days for public comment in response to the notice.

DATES: Written comments and recommendations on the proposed collection of information should be received on or before November 29, 2019.

ADDRESSES: Submit written comments on the collection of information through Federal Docket Management System (FDMS) at *www.Regulations.gov* or to Nancy J. Kessinger, Veterans Benefits Administration (20M33), Department of Veterans Affairs, 810 Vermont Avenue NW, Washington, DC 20420 or email to *nancy.kessinger@va.gov.* Please refer to ''OMB Control No. 2900–0144'' in any correspondence. During the comment period, comments may be viewed online through FDMS.

FOR FURTHER INFORMATION CONTACT: Danny Green at (202) 421–1354.

SUPPLEMENTARY INFORMATION: Under the PRA of 1995, Federal agencies must obtain approval from the Office of Management and Budget (OMB) for each collection of information they conduct or sponsor. This request for comment is being made pursuant to Section 3506(c)(2)(A) of the PRA. With respect to the following collection of information, VBA, invites comments on: (1) Whether the proposed collection of information is necessary for the proper performance of VBA's functions, including whether the information will have practical utility; (2) the accuracy of VBA's estimate of the burden of the proposed collection of information; (3) ways to enhance the quality, utility, and

clarity of the information to be collected; and (4) ways to minimize the burden of the collection of information on respondents, including through the use of automated collection techniques or the use of other forms of information technology.

Authority: Public Law 104–13; 44 U.S.C. 3501–21.

Title: HUDVA Addendum to Uniform Residential Loan Application, VA form 26–1802a.

OMB Control Number: 2900–0144.

Type of Review: Extension of a currently approved collection.

Abstract: VA Form 26–1802a, Department of Housing and Urban Development (HUD)/Department of Veterans Affairs (VA) Addendum to Uniform Residential Loan Application, serve as the lender's and veteran's application for home loans authorized by 38 U.S.C.

Affected Public: Individuals or households.

Estimated Annual Burden: 35,000 hours.

Estimated Average Burden per Respondent: 6 minutes.

Frequency of Response: One-time.

Estimated Number of Respondents: 350,000.

By direction of the Secretary.

Danny S. Green,

Interim VA Clearance Officer, Office of Quality, Performance and Risk, Department of Veterans Affairs.

[FR Doc. 2019–21148 Filed 9–27–19; 8:45 am]

BILLING CODE 8320–01–P

DEPARTMENT OF VETERANS AFFAIRS

Reasonable Charges for Inpatient Medical Severity-Diagnosis Related Groups (MS–DRG) and Skilled Nursing Facility (SNF) Medical Services; v3.26, Fiscal Year (FY) 2020 Update

AGENCY: Department of Veterans Affairs.

ACTION: Notice.

SUMMARY: This document updates the acute inpatient and the skilled nursing facility (SNF)/sub-acute inpatient facility charges. The updated charges are based on the Medicare severity-diagnosis related groups (MS–DRG) for Fiscal Year (FY) 2020.

FOR FURTHER INFORMATION CONTACT: Romona Greene, Office of Community Care, Revenue Operations, Payer Relations and Services, Rates and Charges (10D1C1), Veterans Health Administration, Department of Veterans Affairs, 810 Vermont Avenue NW, Washington, DC 20420; email: *Romona.Greene@va.gov;* telephone: (202) 382–2521 (This is not a toll-free number.)

SUPPLEMENTARY INFORMATION: Section 17.101(a)(1) of title 38 of the Code of Federal Regulations (CFR) sets forth the Department of Veterans Affairs (VA) medical regulations concerning ''Reasonable Charges'' for medical care or services provided or furnished by VA to a Veteran: For a nonservice-connected disability for which the Veteran is entitled to care (or the payment of expenses of care) under a health plan contract; for a nonservice-connected disability incurred incident to the Veteran's employment and covered under a worker's compensation law or plan that provides reimbursement or indemnification for such care and services; or, for a nonservice-connected disability incurred as a result of a motor vehicle accident in a state that requires automobile accident reparations insurance. The methodologies for establishing billed amounts for several types of charges are found in 38 CFR 17.101; however, this notice will only address the acute inpatient and the SNF/sub-acute inpatient facility charges.

Based on the methodologies set forth in 38 CFR 17.101(b), this notice updates the acute inpatient facility charges that were based on the FY 2019 MS–DRGs. Acute inpatient facility charges by MS–DRGs are posted on the Veterans Health Administration (VHA) Office of Community Care's website, at the following link: *www.va.gov/communitycare/revenue_ops/payer_rates.asp,* under the ''Reasonable Charges Data Tables'' section, Inpatient Data Table, as Table A (v3.24). This Table A corresponds to the Table A referenced in 83 **Federal Register** (FR) 47412, September 19, 2018. Table A (v3.26) referenced in this notice provides updated charges based on the FY 2020 MS–DRGs and will replace Table A (v3.24) posted on the VHA Office of Community Care's website.

Also, this document updates the SNF/sub-acute inpatient facility all-inclusive per diem charge using the methodologies set forth in 38 CFR 17.101(c). This charge is adjusted by a geographic area factor that is based on the location where the care is provided. For the geographic area factors, see Table N, *Acute Inpatient,* and Table O, *SNF,* on the VHA Office of Community Care's website under the v3.25 link in the ''Reasonable Charges Data Tables'' section. Tables N and O are not being updated by this notice. The SNF/sub-acute inpatient facility per diem charge is posted on the VHA Office of Community Care's website under the ''Reasonable Charges Data Tables'' section, Table B (v3.24). This Table B corresponds to the Table B referenced in 83 FR 47412, September 19, 2018. Table B referenced in this notice is v3.26, which provides an update to the all-inclusive nationwide SNF/sub-acute inpatient facility per diem charge and will replace Table B (v3.24) posted on the VHA Office of Community Care's website.

The charges in this notice for acute inpatient and SNF/sub-acute inpatient facility services are effective October 1, 2019.

This notice is retaining the table designations used for acute inpatient facility charges by MS–DRGs, which are posted on the VHA Office of Community Care's website under ''Reasonable Charges Data Tables.'' This notice is also retaining the table designation used for SNF/sub-acute inpatient facility charges, which are also posted on the VHA Office of Community Care's website. Accordingly, the tables identified as being updated by this notice correspond to the applicable tables referenced in 83 FR 47412, September 19, 2018.

The list of data sources presented in Supplementary Table 1 (v3.26) reflects the updated data sources used to establish the updated charges described in this notice and will be posted on the VHA Office of Community Care's website under the ''Reasonable Charges Data Sources'' section.

The list of VA medical facility locations is also updated. In Supplementary Table 3, posted on the VHA Office of Community Care's website under the VA Medical Facility Locations section, VA set forth the list of VA medical facility locations, which includes the first three digits of their zip codes and provider-based/non-provider-based designations.

Consistent with VA's regulations, the updated data tables and supplementary tables containing the changes described in this notice will be posted on the VHA Office of Community Care's website, under the ''Payer Rates and Charges'' information section.

Signing Authority

The Secretary of Veterans Affairs, or designee, approved this document and authorized the undersigned to sign and submit the document to the Office of the Federal Register for publication electronically as an official document of the Department of Veterans Affairs. Robert L. Wilkie, Secretary, Department of Veterans Affairs, approved this document on September 26, 2019, for publication.

Dated: September 26, 2019.

Jeffrey M. Martin,

Assistant Director, Office of Regulation Policy & Management, Office of the Secretary, Department of Veterans Affairs.

[FR Doc. 2019–21329 Filed 9–27–19; 8:45 am]

BILLING CODE 8320–01–P

DEPARTMENT OF VETERANS AFFAIRS

Cost-Based and Inter-Agency Billing Rates for Medical Care or Services Provided by the Department of Veterans Affairs for FY 2020

ADDRESSES: The Department of Veterans Affairs.

ACTION: Notice.

SUMMARY: This document updates the Cost-Based and Inter-Agency billing rates for medical care or services provided by the Department of Veterans Affairs (VA) furnished in certain circumstances.

DATES: The rates set forth herein are effective October 1, 2019.

FOR FURTHER INFORMATION CONTACT: Romona Greene, Office of Community Care, Revenue Operations, Payer Relations and Services, Rates and Charges (10D1C1), Veterans Health Administration (VHA), Department of Veterans Affairs, 810 Vermont Avenue NW, Washington, DC 20420, (202) 382–2521. (This is not a toll free number.)

SUPPLEMENTARY INFORMATION: VA's methodology for computing Cost-Based and Inter-Agency rates for medical care or services provided by VA is set forth in 38 Code of Federal Regulations 17.102(h). Two sets of rates are obtained by applying this methodology, Cost-Based and Inter-Agency.

Cost-Based rates apply to medical care and services that are provided by VA under § 17.102(a), (b), (d) and (g), respectively, in the following circumstances:

- In error or based on tentative eligibility,
- In a medical emergency,
- To pensioners of allied nations, and
- For research purposes in circumstances under which the medical care appropriation shall be reimbursed from the research appropriation.

Inter-Agency rates apply to medical care and services that are provided by VA under § 17.102(c) and (f), respectively, in the following circumstances when the care or services provided are not covered by any applicable sharing agreement in accordance with § 17.102(e):

- To beneficiaries of the Department of Defense or other Federal agencies; and
- To military retirees with chronic disability.

The calculations for the Cost-Based and Inter-Agency rates are the same with two exceptions. Inter-Agency rates are all-inclusive and are not broken down into three components (*i.e.,* Physician; Ancillary; and Nursing, Room and Board), and do not include standard fringe benefit costs that cover Government employee retirement, disability costs, and return on fixed assets. When VA pays for medical care or services from a non-VA source under circumstances in which the Cost-Based or Inter-Agency rates would apply if the care or services had been provided by VA, the charge for such care or services will be the actual amount paid by VA for the care or services. Inpatient charges will be at the per diem rates shown for the type of bed section or discrete treatment unit providing the care.

The following table depicts the Cost-Based and Inter-Agency rates that are effective October 1, 2019 and will remain in effect until the next fiscal year **Federal Register** update. These rates supersede those established by the **Federal Register** notice published on August 28, 2018, at 83 FR 43958.

	Cost-based rates	Inter-agency rates
A. Hospital Care per inpatient day:		
General Medicine:		
All Inclusive Rate	$4,301	$4,156
Physician	515	
Ancillary	1,121	
Nursing Room and Board	2,665	
Neurology:		
All Inclusive Rate	4,232	4,086
Physician	620	
Ancillary	1,117	
Nursing Room and Board	2,495	
Rehabilitation Medicine:		
All Inclusive Rate	2,910	2,803
Physician	331	
Ancillary	889	
Nursing Room and Board	1,690	
Blind Rehabilitation:		
All Inclusive Rate	1,995	1,920
Physician	161	
Ancillary	991	
Nursing Room and Board	843	
Spinal Cord Injury:		
All Inclusive Rate	2,636	2,540
Physician	327	
Ancillary	663	
Nursing Room and Board	1,646	
Surgery:		
All Inclusive Rate	7,526	7,272
Physician	829	
Ancillary	2,283	
Nursing Room and Board	4,414	
General Psychiatry:		
All Inclusive Rate	2,174	2,091
Physician	205	

	Cost-based rates	Inter-agency rates
Ancillary	342	
Nursing Room and Board	1,627	
Substance Abuse (Alcohol and Drug Treatment):		
All Inclusive Rate	2,232	2,147
Physician	213	
Ancillary	516	
Nursing Room and Board	1,503	
Psychosocial Residential Rehabilitation Program:		
All Inclusive Rate	826	797
Physician	52	
Ancillary	87	
Nursing Room and Board	687	
Intermediate Medicine:		
All Inclusive Rate	3,301	3,182
Physician	162	
Ancillary	484	
Nursing Room and Board	2,655	
Poly-trauma Inpatient:		
All Inclusive Rate	3,223	3,097
Physician	366	
Ancillary	985	
Nursing Room and Board	1,872	
B. Nursing Home Care, Per Day:		
All Inclusive Rate	1,361	1,311
Physician	42	
Ancillary	184	
Nursing Room and Board	1135	
C. Outpatient Medical Treatments:		
Outpatient Visit (to include Ineligible Emergency Dental Care)	389	376
Outpatient Physical Medicine & Rehabilitation Service Visit	238	228
Outpatient Poly-trauma/Traumatic Brain Injury	671	649

Note: Outpatient Prescriptions will be billed at Drug Cost plus Administrative Fee.

Signing Authority

The Secretary of Veterans Affairs, or designee, approved this document and authorized the undersigned to sign and submit the document to the Office of the Federal Register for publication electronically as an official document of the Department of Veterans Affairs. Robert L. Wilkie, Secretary, Department of Veterans Affairs, approved this document on September 26, 2019, for publication.

Dated: September 26, 2019.

Jeffrey M. Martin,

Assistant Director, Office of Regulation Policy & Management, Office of the Secretary, Department of Veterans Affairs.

[FR Doc. 2019–21330 Filed 9–27–19; 8:45 am]

BILLING CODE 8320–01–P

DEPARTMENT OF VETERANS AFFAIRS

[OMB Control No. 2900–0144]

Agency Information Collection Activity: HUDVA Addendum to Uniform Residential Loan Application

AGENCY: Veterans Benefits Administration; Department of Veterans Affairs.

ACTION: Notice.

SUMMARY: Veterans Benefits Administration, Department of Veterans Affairs (VA), is announcing an opportunity for public comment on the proposed collection of certain information by the agency. Under the Paperwork Reduction Act (PRA) of 1995, Federal agencies are required to publish notice in the **Federal Register** concerning each proposed collection of information, including each proposed extension of a currently approved collection, and allow 60 days for public comment in response to the notice.

DATES: Written comments and recommendations on the proposed collection of information should be received on or before November 29, 2019.

ADDRESSES: Submit written comments on the collection of information through Federal Docket Management System (FDMS) at *www.Regulations.gov* or to Nancy J. Kessinger, Veterans Benefits Administration (20M33), Department of Veterans Affairs, 810 Vermont Avenue NW, Washington, DC 20420 or email to *nancy.kessinger@va.gov.* Please refer to ''OMB Control No. 2900–0144'' in any correspondence. During the comment period, comments may be viewed online through FDMS.

FOR FURTHER INFORMATION CONTACT: Danny Green at (202) 421–1354.

SUPPLEMENTARY INFORMATION: Under the PRA of 1995, Federal agencies must obtain approval from the Office of Management and Budget (OMB) for each collection of information they conduct or sponsor. This request for comment is being made pursuant to Section 3506(c)(2)(A) of the PRA.

With respect to the following collection of information, VBA, invites comments on: (1) Whether the proposed collection of information is necessary for the proper performance of VBA's functions, including whether the information will have practical utility; (2) the accuracy of VBA's estimate of the burden of the proposed collection of information; (3) ways to enhance the quality, utility, and clarity of the information to be collected; and (4) ways to minimize the burden of the collection of information on respondents, including through the use of automated collection techniques or the use of other forms of information technology.

Authority: Public Law 104–13; 44 U.S.C. 3501–21.

Title: HUDVA Addendum to Uniform Residential Loan Application, VA form 26–1802a.

OMB Control Number: 2900–0144.

Type of Review: Extension of a currently approved collection.

Abstract: VA Form 26–1802a, Department of Housing and Urban Development (HUD)/Department of Veterans Affairs (VA) Addendum to Uniform Residential Loan Application, serve as the lender's and veteran's application for home loans authorized by 38 U.S.C.

Affected Public: Individuals or households.

Estimated Annual Burden: 35,000 hours.

Estimated Average Burden per Respondent: 6 minutes.

Frequency of Response: One-time.

Estimated Number of Respondents: 350,000.

By direction of the Secretary:

Danny S. Green,

Interim VA Clearance Officer, Office of Quality, Performance and Risk, Department of Veterans Affairs.

[FR Doc. 2019–21155 Filed 9–27–19; 8:45 am]

BILLING CODE 8320–01–P

FEDERAL REGISTER

Vol. 84 Monday,

No. 189 September 30, 2019

Part II

Department of Health and Human Services

Centers for Medicare & Medicaid

42 CFR Parts 403, 416, 418, 441, *et al.*

Medicare and Medicaid Programs; Regulatory Provisions To Promote Program Efficiency, Transparency, and Burden Reduction; Fire Safety Requirements for Certain Dialysis Facilities; Hospital and Critical Access Hospital (CAH) Changes To Promote Innovation, Flexibility, and Improvement in Patient Care; Final Rule

DEPARTMENT OF HEALTH AND HUMAN SERVICES

Centers for Medicare & Medicaid Services

42 CFR Parts 403, 416, 418, 441, 460, 482, 483, 484, 485, 486, 488, 491, and 494

[CMS–3346–F; CMS–3334–F; CMS–3295–F]

RIN 0938–AT23

Medicare and Medicaid Programs; Regulatory Provisions To Promote Program Efficiency, Transparency, and Burden Reduction; Fire Safety Requirements for Certain Dialysis Facilities; Hospital and Critical Access Hospital (CAH) Changes To Promote Innovation, Flexibility, and Improvement in Patient Care

AGENCY: Centers for Medicare & Medicaid Services (CMS), HHS.

ACTION: Final rule.

SUMMARY: This final rule reforms Medicare regulations that are identified as unnecessary, obsolete, or excessively burdensome on health care providers and suppliers. This final rule also increases the ability of health care professionals to devote resources to improving patient care by eliminating or reducing requirements that impede quality patient care or that divert resources away from furnishing high quality patient care. Additionally, this rule updates fire safety standards for Medicare and Medicaid participating End-Stage Renal Disease (ESRD) facilities by adopting the 2012 edition of the Life Safety Code and the 2012 edition of the Health Care Facilities Code. Finally, this final rule updates the requirements that hospitals and Critical Access Hospitals (CAHs) must meet to participate in the Medicare and Medicaid programs. These requirements are intended to conform to current standards of practice and support improvements in quality of care, reduce barriers to care, and reduce some issues that may exacerbate workforce shortage concerns.

DATES:

Effective date: These regulations are effective on November 29, 2019. The incorporation by reference of certain publications listed in the rule is approved by the Director of the Federal Register as of November 29, 2019.

Implementation dates: The regulations at § 485.641 regarding Quality Assessment and Performance Improvement Programs (QAPI) in critical access hospitals (CAHs) must be implemented by March 30, 2021.

The regulations at § 482.42(b) and § 485.640(b) regarding hospital and critical access hospital (CAH) antibiotic stewardship programs must be implemented by March 30, 2020.

FOR FURTHER INFORMATION CONTACT:

For issues related to Regulatory Provisions to Promote Program Efficiency, Transparency, and Burden Reduction, contact Kristin Shifflett, (410) 786–4133.

For issues related to Fire Safety Requirements for Certain Dialysis Facilities, contact Kristin Shifflett, (410) 786–4133.

For issues related to the Hospital and Critical Access Hospital (CAH) Changes to Promote Innovation, Flexibility, and Improvement in Patient Care, contact CAPT Scott Cooper, USPHS, (410) 786–9465, Mary Collins, (410) 786–3189, Alpha-Banu Wilson, (410) 786–8687, or Kianna Banks, (410) 786–3498.

SUPPLEMENTARY INFORMATION: We note that this rule finalizes provisions that were proposed in three separate proposed rules that were published in the **Federal Register** on separate dates. Specifically, we are finalizing the provisions of the following proposed rules, discussed as follows:

- ''Regulatory Provisions to Promote Program Efficiency, Transparency, and Burden Reduction,'' published September 20, 2018 (83 FR 47686);
- ''Hospital and Critical Access Hospital (CAH) Changes to Promote Innovation, Flexibility, and Improvement in Patient Care,'' published June 16, 2016 (81 FR 39448); and
- ''Fire Safety Requirements for Certain Dialysis Facilities,'' published November, 4, 2016 (81 FR 76899)

To assist readers in referencing sections contained in this preamble, we are providing a table of contents.

Table of Contents

I. Final Rule: Regulatory Provisions To Promote Program Efficiency, Transparency, and Burden Reduction
A. Executive Summary and Background
1. Purpose
2. Summary of Major Provisions
3. Summary of Costs and Benefits for Regulatory Provisions To Promote Program Efficiency, Transparency, and Burden Reduction
B. Provisions of the Proposed Rule and Analysis and Response to Public Comments
1. Religious Nonmedical Health Care Institutions (RNHCIs)—Discharge Planning
2. Ambulatory Surgical Centers
3. Hospice
4. Hospitals
5. Transplant Centers
6. Home Health Agencies
7. Comprehensive Outpatient Rehabilitation Facility (CORF)—Utilization Review Plan
8. Critical Access Hospitals
9. Community Mental Health Center
10. Portable X-Ray Services
11. Rural Health Clinics (RHCs) and Federally Qualified Health Centers (FQHCs)
12. Emergency Preparedness for Providers and Suppliers
13. Technical Corrections
14. Waiver of Proposed Rulemaking
C. Collection of Information Requirements
II. Final Rule: Fire Safety Requirements for Certain Dialysis Facilities
A. Background
B. Provisions of the Proposed Rule and Analysis and Response to Public Comments
1. 2012 Edition of the Life Safety Code
2. Incorporation by Reference
3. Ambulatory Health Care Occupancies
4. 2012 Edition of the Health Care Facilities Code
5. Technical Corrections
C. Collection of Information Requirements
III. Final Rule: Hospital and Critical Access Hospital (CAH) Changes To Promote Innovation, Flexibility, and Improvement in Patient Care
A. Background
B. Provisions of the Proposed Rule and Analysis and Response to Public Comments for Hospitals
1. General Comments
2. Implementation Timeframe
3. Non-Discrimination
4. Licensed Independent Practitioner
5. Quality Assessment and Performance Improvement (QAPI) Program
6. Nursing Services
7. Medical Record Services
8. Infection Prevention and Control and Antibiotic Stewardship Programs
9. Technical Corrections
C. Provisions of the Proposed Regulations and Responses to Public Comments for Critical Access Hospitals
1. Organization Structure
2. Periodic Review of Clinical Privileges and Performance
3. Provision of Services (§ 485.635(a)(3)(vii))
4. Provision of Services (§ 485.635(g))
5. Infection Prevention and Control and Antibiotic Stewardship Programs (§ 485.640)
6. Quality Assessment and Performance Improvement (QAPI) Program (§ 485.641)
7. Technical Corrections
D. Requirements for Issuance of Regulations
E. Collection of Information Requirements for Hospital and Critical Access Hospital (CAH) Changes To Promote Innovation, Flexibility, and Improvement in Patient Care
IV. Economic Analyses
A. Regulatory Impact Analysis for Regulatory Provisions To Promote Program Efficiency, Transparency, and Burden Reduction
1. Statement of Need
2. Overall Impact
3. Anticipated Effects

4. Alternatives Considered
5. Uncertainty
6. Conclusion
B. Regulatory Impact Statement for Fire Safety Requirements for Certain Dialysis Facilities
C. Regulatory Impact Analysis for Hospital and Critical Access Hospital (CAH) Changes to Promote Innovation, Flexibility, and Improvement in Patient Care
1. Statement of Need
2. Overall Impact
3. Anticipated Effects
4. Effects on Small Entities
5. Alternatives Considered
6. Conclusion
D. Accounting Statement and Table
E. Regulatory Reform Analysis Under E.O. 13771

I. Final Rule: Regulatory Provisions To Promote Program Efficiency, Transparency, and Burden Reduction

A. Executive Summary and Background

1. Purpose

Over the past several years, we have revised our requirements, Conditions of Participation (CoPs) and Conditions for Coverage/Conditions for Certification (CfCs) to reduce the regulatory burden on providers and suppliers while emphasizing health and safety. We identified obsolete and burdensome regulations that could be eliminated or reformed to improve effectiveness or reduce unnecessary reporting requirements and other costs, with a particular focus on freeing up resources that health care providers, health plans, and States could use to improve or enhance patient health and safety. We also examined policies and practices not codified in rules that could be changed or streamlined to achieve better outcomes for patients while reducing burden on providers and suppliers of care, and we identified non-regulatory changes to increase transparency and to become a better business partner. In addition, the Centers for Medicare & Medicaid Services (CMS) and the Department of Health and Human Services (HHS) have reaffirmed their commitment to the vision of creating an environment where agencies incorporate and integrate the ongoing retrospective review of regulations into Department operations to achieve a more streamlined and effective regulatory framework. The objectives were to improve the quality of existing regulations consistent with statutory requirements; streamline procedural solutions for businesses to enter and operate in the marketplace; maximize net benefits (including benefits that are difficult to quantify); and reduce costs and other burdens on businesses to comply with regulations.

In accordance with these goals, we published three final rules that identified unnecessary, obsolete, or excessively burdensome regulations on health care providers, suppliers, and beneficiaries. These rules further increased the ability of health care professionals to devote resources to improving health care by eliminating or reducing requirements that impede quality patient care or that divert providing high quality patient care:

- ''Reform of Hospital and Critical Access Hospital Conditions of Participation'', published May 16, 2012 (77 FR 29034);
- ''Regulatory Provisions to Promote Program Efficiency, Transparency, and Burden Reduction'', published May 16, 2012 (77 FR 29002) and;
- ''Regulatory Provisions to Promote Program Efficiency, Transparency, and Burden Reduction; Part II'', published May 12, 2014 (79 FR 27105).

This final rule is a continuation of our efforts to reduce regulatory burden and is in accordance with the January 30, 2017 Executive Order ''Reducing Regulation and Controlling Regulatory Costs'' (Executive Order 13771). We are finalizing changes to the current requirements, CoPs, and CfCs that will simplify and streamline the current regulations and thereby increase provider flexibility and reduce excessively burdensome regulations, while also allowing providers to focus on providing high-quality healthcare to their patients. This final rule will also reduce the frequency of certain required activities and, where appropriate, revise timelines for certain requirements for providers and suppliers and remove obsolete, duplicative, or unnecessary requirements. We believe these policies balance patient safety and quality, while also providing broad regulatory relief for providers and suppliers.

In the proposed rule, we stated that we seek to reduce burdens for health care providers and patients, improve the quality of care, decrease costs, and ensure that patients and their providers and physicians are making the best health care choices possible. Therefore, we solicited public comments on additional regulatory reforms for burden reduction in future rulemaking. Specifically, we sought public comment on additional proposals or modifications to the proposals set forth in the proposed rule, ''Regulatory Provisions to Promote Program Efficiency, Transparency, and Burden Reduction,'' published September 20, 2018 (83 FR 47686) that would further reduce burden on Medicare and Medicaid participating providers and suppliers and create cost savings, while also preserving quality of care and patient health and safety. We also noted in the proposed rule (83 FR 47686), consistent with our ''Patients Over Paperwork'' Initiative, that we are particularly interested in improving existing requirements, within our statutory authority, where the requirements as currently written make providing quality care difficult or less effective. We also noted that such suggestions could include or expand upon comments submitted in response to Requests for Information (RFIs) that were included in the 2017 prospective payment regulations for most provider types.

2. Summary of Major Provisions

We are reducing regulatory burden on providers and suppliers by modifying, removing, or streamlining current regulations that we now believe are unnecessary, obsolete or excessively burdensome. Specifically, we are finalizing the following revisions:

a. Discharge Planning in Religious Nonmedical Health Care Institutions (RNHCIs)

We have revised the requirements at 42 CFR 403.736(a) and (b) pertaining to a discharge plan. This revision simplifies the discharge process for RNHCIs by requiring them to assess the need for a discharge plan and provide discharge instructions to the patient and the patient's caregiver as necessary when the patient is discharged home.

b. Ambulatory Surgical Center (ASC): Transfer Agreements With Hospitals

We are replacing the requirement at § 416.41(b)(3), that ASCs have written transfer agreements or privileges with the local hospital with a requirement that ASCs must periodically provide the local hospital with written notice of its operation and patient population served.

c. ASC Requirements for Comprehensive Medical History and Physical Assessment

We are removing the current requirements at § 416.52(a) for a History and Physical within 30 days of the procedure and replacing them with requirements that defer, to a certain extent, to the ASC policy and operating physician's clinical judgment to ensure that patients receive the appropriate pre-surgical assessments tailored to the patient and the type of surgery being performed. We still require the operating physician to document any pre-existing medical conditions and appropriate test results, in the medical record, before, during and after surgery.

In addition, we have retained the requirement that all pre-surgical assessments include documentation regarding any allergies to drugs and biologicals, and that the medical history and physical examination (H&P), if completed, be placed in the patient's medical record prior to the surgical procedure.

d. Hospice Requirements for Medication Management

We are removing the procedural requirements at § 418.106(a)(1), related to having on the hospice staff, an individual with specialty knowledge of hospice medications.

e. Hospice Requirements: Orientation of Skilled Nursing Facility (SNF) and Intermediate Care Facilities for Individuals With Intellectual Disabilities (ICF/IID) Staff

We are revising the requirements at § 418.112(f) to explicitly require hospices to coordinate with SNFs/NFs and ICFs/IID for assuring orientation of facility staff.

f. Hospital Quality Assessment and Performance Improvement Program (QAPI Program)

We are finalizing a new standard at 42 CFR 482.21(f), ''Unified and integrated QAPI program for multi-hospital systems.'' For a hospital that is part of a hospital system, consisting of multiple separately certified hospitals using a system governing body that is legally responsible for the conduct of two or more hospitals, the system governing body can elect to have a unified and integrated QAPI program for all of its member hospitals if the arrangement is in accordance with all applicable State and local laws. The system governing body is responsible and accountable for ensuring that each of its separately certified hospitals meets all of the requirements of this section.

g. Hospital Requirements for Comprehensive Medical History and Physical Examinations (§§ 482.22, 482.24, and 482.51)

We are allowing hospitals the flexibility to establish a medical staff policy describing the circumstances under which such hospitals can utilize a pre-surgery/pre-procedure assessment for an outpatient, instead of a comprehensive medical history and physical examination (H&P). We believe that allowing this option will greatly reduce the burden on the hospital, the practitioner, and the patient. In order to exercise this option, a hospital must document the assessment in a patient's medical record. The hospital's policy must consider patient age, diagnoses, the type and number of surgeries and procedures scheduled to be performed, comorbidities, and the level of anesthesia required for the surgery or procedure; nationally recognized guidelines and standards of practice for assessment of specific types of patients prior to specific outpatient surgeries and procedures; and applicable state and local health and safety laws.

h. Hospital Infection Control Program

We are broadly revising § 482.42, and issuing a new standard at § 482.42(d), ''Unified and integrated infection prevention and control and antibiotic stewardship programs for multi-hospital systems.'' Like the requirement for a unified and integrated QAPI program, the standard for infection control permits a hospital that is part of a hospital system consisting of multiple separately certified hospitals using a single governing body, such body can elect to have a unified and integrated infection prevention and control program for all of its member hospitals in accordance with all applicable State and local laws. The system governing body is responsible and accountable for ensuring that each of its separately certified hospitals meets all of the requirements of this section. Each separately certified hospital within the system must demonstrate that—the unified and integrated infection control program is established in a manner that takes into account each member hospital's unique circumstances and any significant differences in patient populations and services offered in each hospital; the unified and integrated infection control program establishes and implements policies and procedures to ensure that the needs and concerns of each of its separately certified hospitals, regardless of practice or location, are given due consideration, and that the unified and integrated infection control program has mechanisms in place to ensure that issues localized to particular hospitals are duly considered and addressed; and a qualified individual (or individuals) has been designated at the hospital as responsible for communicating with the unified infection control program and for implementing and maintaining the policies and procedures governing infection control as directed by the unified infection control program.

i. Special Requirements for Psychiatric Hospitals

At § 482.61(d), we are clarifying the scope of authority for non-physician practitioners or Doctors of Medicine and Doctors of Osteopathic Medicine (MD/DOs) to document progress notes of patients receiving services in psychiatric hospitals.

j. Special Requirement for Transplant Centers and Definitions

We are making a nomenclature change at 42 CFR part 482 and the transplant center regulations at §§ 482.68, 482.70, 482.72 through 482.104, and at § 488.61. This change updates the terminology used in the regulations to conform to the terminology that is widely used and understood within the transplant community, thereby reducing provider confusion.

k. Data Submission, Clinical Experience, and Outcome Requirements for Re-Approval of Transplant Centers

We are removing the requirements at § 482.82 that state that transplant centers must meet all data submission, clinical experience, and outcome requirements in order to obtain Medicare re-approval. Transplant centers will still be required to comply with the CoPs at §§ 482.72 through 482.104 and the data submission, clinical experience, and outcome requirements for initial Medicare approval under § 482.80.

l. Special Procedures for Approval and Re-Approval of Organ Transplant Centers

We are revising § 488.61(f) through (h) to remove the requirements with respect to the re-approval process for transplant centers. This change corresponds to the proposed removal of the provisions at § 482.82. We are retaining the requirements in § 488.61(f) through (h) that pertain to the *initial* approval process for transplant centers.

m. Home Health Agency (HHA) Requirements for Verbal Notification of Patient Rights and Responsibilities

We are removing the requirements for verbal (meaning spoken) notification of all patient rights at § 484.50(a)(3), and replacing it with a requirement that verbal notice must be provided for those rights related to payments made by Medicare, Medicaid, and other federally funded programs, and potential patient financial liabilities as specified in the Social Security Act (the Act).

n. Personnel Requirements for Portable X-Ray Technologists

We are revising § 486.104(a), ''Condition for coverage: Qualifications, orientation and health of technical personnel'', to focus on the qualifications of the individual performing services.

o. Portable X-Ray Requirements for Orders

We are revising the requirements for portable x-ray orders at § 486.106(a)(2) by removing the requirement that physician or non-physician practitioner's orders for portable x-ray services must be written and signed and replacing the specific requirements related to the content of each portable x-ray order with a cross-reference to the requirements at 42 CFR 410.32, which also apply to portable x-ray services.

p. Emergency Preparedness Requirements: Requirements for Emergency Plans

We are removing the requirements from our emergency preparedness rules for Medicare and Medicaid providers and suppliers that facilities document efforts to contact local, tribal, regional, State, and Federal emergency preparedness officials, and that facilities document their participation in collaborative and cooperative planning efforts.

q. Emergency Preparedness Requirements: Requirements for Annual Review of Emergency Program

We are revising this requirement so that applicable providers and suppliers review their Emergency program biennially, except for Long Term Care facilities, which will still be required to review their emergency program annually.

r. Emergency Preparedness Requirements: Requirements for Training

We are revising the requirement that facilities develop and maintain a training program based on the facility's emergency plan annually by requiring facilities to provide training biennially (every 2 years) after facilities conduct initial training for their emergency program, except for long term care facilities which will still be required to provide training annually. In addition, we are requiring additional training when the emergency plan is significantly updated.

s. Emergency Preparedness Requirements: Requirements for Testing

For inpatient providers, we are expanding the types of acceptable testing exercises that may be conducted. For outpatient providers, we are revising the requirement such that only one testing exercise is required annually, which may be either one community-based full-scale exercise, if available, or an individual facility-based functional exercise, every other year and in the opposite years, these providers may choose the testing exercise of their choice.

2. Proposals That Reduce the Frequency of Activities and Revise Timelines

a. Comprehensive Outpatient Rehabilitation Facility (CORF) Utilization Review Plans

We are amending the utilization review plan requirements at § 485.66 to reduce the frequency of utilization reviews from quarterly to annually. This would allow an entire year to collect and analyze data to inform changes to the facility and the services provided.

b. CAH Annual Review of Policies and Procedures

We are changing the requirement at § 485.635(a)(4) to require a CAH's professional personnel to, at a minimum, conduct a biennial review of its policies and procedures instead of an annual review.

c. Community Mental Health Center (CMHC) Requirements for Updating the Client Assessment

At § 485.914, we are removing the requirement that all CMHC clients receive an updated assessment every 30 days. Instead, we would require updates of the patient assessment in accordance with client needs and standards of practice. For clients receiving partial hospitalization services, we are retaining the 30-day assessment update time frame to be consistent with existing Medicare payment requirements for recertification of partial hospitalization services.

d. Rural Health Clinic (RHC) and Federally Qualified Health Center (FQHC) Review of Patient Care Policies

We are revising the requirement at § 491.9(b)(4) that RHC and FQHC patient care policies be reviewed at least annually by a group of professional personnel, to review every other year in order to reduce the frequency of policy reviews.

e. RHC and FQHC Program Evaluation

We are revising the requirement at § 491.11(a) by changing the frequency of the required RHC or FQHC evaluation from annually to every other year.

3. Proposals That Are Obsolete, Duplicative, or That Contain Unnecessary Requirements

a. Hospice Aide Training and Competency Requirements

We are revising § 418.76(a)(1)(iv) to remove the requirement that a State licensure program meet the specific training and competency requirements set forth in § 418.76(b) and (c) in order for such licensure to qualify a hospice aide to work at a Medicare-participating hospice, deferring to State licensure requirements.

b. Medical Staff: Autopsies

We are finalizing our proposal to remove the requirement for hospitals at § 482.22(d), which states that a hospital's medical staff should attempt to secure autopsies in all cases of unusual deaths and of medical-legal and educational interest. We are deferring to State law regarding such medical-legal requirements.

c. Hospital and CAH Swing-Bed Requirements

We are removing the cross reference to § 483.10(f)(9) at § 482.58(b)(1) (for hospital swing-bed providers) and § 485.645(d)(1) (for CAH swing-bed providers); the repealed provisions gave a resident the right to choose to, or refuse to, perform services for the facility if they so choose.

We are removing the cross-reference to § 483.24(c) at § 482.58(b)(4) (for hospital swing-bed providers) and § 485.645(d)(4) (for CAH swing-bed providers) requiring that the facility provide an ongoing activity program based on the resident's comprehensive assessment and care plan directed by a type of qualified professional specified in the regulation.

We are removing the cross-reference to § 483.70(p) at § 482.58(b)(5) (for hospital swing-bed providers) and § 485.645(d)(5) (for CAH swing-bed providers requiring facilities with more than 120 beds to employ a social worker on full-time basis).

We are removing the cross-reference to § 483.55(a)(1) at § 482.58(b)(8) (for hospital swing-bed providers) and § 485.645(d)(8) (for CAH swing-bed providers) requiring that the facility assist residents in obtaining routine and 24-hour emergency dental care.

d. Home Health Agency Home Health Aide Requirements

We are revising § 484.80(c)(1) to clarify that skill competencies may be assessed by observing an aide performing the skill with either a patient or a pseudo-patient as part of a simulation. We are defining the terms ''pseudo-patient'' and ''simulation'' in § 484.2.

We are revising the requirement at § 484.80(h) related to completing a full competency evaluation when an aide is found to be deficient in one or more skills. Instead of completing a full competency evaluation, an aide would only be required to complete retraining

and a competency evaluation directly related to the deficient skills.

e. CAH Disclosure Requirements

We are removing § 485.627(b)(1), the requirement for CAHs to disclose the names of people with a financial interest in the CAH. This is currently a requirement under the program integrity requirements at 42 CFR 420.206, which are referenced in the provider agreement rules in 42 CFR 489.53(a)(8), making this CAH CoP requirement duplicative of those regulations.

3. Summary of Costs and Benefits for Regulatory Provisions To Promote Efficiency, Transparency, and Burden Reduction

1. Overall Impact

This final rule will create savings and reduce burden in many areas. Several of the changes will create measurable monetary savings for providers and suppliers, while others will create less quantifiable savings of time and administrative burden. We anticipate a total first year net savings of approximately $843 million, and slightly more in future years.

2. Section-by-Section Economic Impact Estimates

Table 1 summarizes the provisions for which we are able to provide specific estimates for savings or burden reductions (these estimates are uncertain and could be substantially higher or lower, as explained in the regulatory impact analysis section of this final rule):

TABLE 1—SUMMARY OF NET SAVINGS BY PROVISION

Provider and supplier type and description of proposed provisions	Frequency	Number of affected entities	Estimated savings (annualized, $millions)
Religious Nonmedical Health Care Institutions:			
• Discharge Planning	As patients are discharged (Estimated 619 annual discharges).	18	(*)
Ambulatory Surgical Centers:			
• Governing Body and Management	Upon failed hospital transfer agreement attempts	5,557	(*)
• Patient Admission, Assessment and Discharge (History and Physical).	Every patient registration at an ASC or at a hospital outpatient/. ambulatory surgery department	5,557	77.
• Medical Records	Recurring annually	5,557	0.
Hospices:			
• Drugs and Biologicals, Medical Supplies, and Durable Medical Equipment***.	Recurring annually	4,602	94.
• Hospices That Provide Hospice Care to residents of a SNF/NF or ICF/IID.	Recurring annually	4,602	1.
• Hospice Aide and Homemaker Services	Recurring annually	4,602	2.
Hospitals:			
• Quality Assessment and Performance Improvement Program.	Recurring annually	4,823	31.
• Medical staff: Autopsies	Recurring annually	4,823	0.
• Infection Control	Recurring annually	4,823	115.
• Special requirements for hospital providers of long-term care services (“swing-beds”).	Recurring annually	478	30.
• Special Requirements for Psychiatric Hospitals.	Recurring annually	620	154.
• Patient Admission, Assessment and Discharge (History and Physical).	Every patient registration at an ASC or at a hospital outpatient/ambulatory surgery department.	4,823	77.
Transplant programs:			
• Various provisions related to performance**	Recurring annually	750	Not Quantified.
Home Health Agencies:			
• Patient rights	Recurring annually	12,624	57.
• Home health aide services	Recurring annually	12,624	Not Quantified.
• Clinical records	Recurring annually	12,624	Not Quantified.
Critical Access Hospitals:			
• Provision of Services	Recurring biennially	1,353	1.
• Organizational structure	Recurring annually	1,353	(*)
• Special requirements for CAH providers of long-term care services (“swing-beds”).	Recurring annually	1,246	77.
Comprehensive Outpatient Rehabilitation Facilities:			
• Utilization Review Plan	Recurring annually	188	(*)
Community Mental Health Centers:			
• Assessment Update	Recurring annually	52	(*)
Portable X-Ray Services:			
• Qualifications of X-ray technicians***	Recurring annually	500	31.
• Removing written orders	Recurring annually	500	28.
RHC (4,160 clinics) & FQHC (7,874 center locations):			
• Patient Care Policies Review	Recurring biennially	12,034	4.
• Program Evaluation	Recurring biennially	12,034	5.
Emergency Preparedness for Providers and Suppliers:			
• Review of Emergency Preparedness Program.	Recurring biennially	56,983	70.
• Emergency Plan	Recurring annually	68,275	7.
• Training and Testing—Training Program	Recurring biennially	53,543	26.

TABLE 1—SUMMARY OF NET SAVINGS BY PROVISION—Continued

Provider and supplier type and description of proposed provisions	Frequency	Number of affected entities	Estimated savings (annualized, $millions)
• Training and Testing—Testing	Recurring annually	36,971	21.

* Amount is less than half a million dollars and rounds to zero.
** These include changes to the following requirements: Special Requirements for Transplant Programs; Data submission, Clinical Experience, and Outcome Requirement for Re-approval of Transplant Programs; and Special Procedures for Approval and Re-Approval of Organ Transplant Programs.
*** This estimate is for first full year savings only and will increase in future years.

B. Provisions of the Proposed Rule and Analysis and Response to Public Comments on ''Medicare and Medicaid Programs; Regulatory Provisions To Promote Program Efficiency, Transparency, and Burden Reduction''

In response to our September 20, 2018 proposed rule (83 FR 47686), we received 620 public comments. Commenters included individuals, healthcare professionals and corporations, national associations, health departments and emergency management professionals, and individual facilities that would be impacted by the regulation. Generally, the comments received were supportive. Most comments were centered around the proposed revisions to the emergency preparedness regulations for Medicare and Medicaid providers and suppliers. We have organized our responses to the comments as follows: (1) Comments specific to individual types of providers and suppliers (2); general comments; and (3) comments regarding our savings estimates.

1. Religious Nonmedical Health Care Institutions (RNHCIs)—Discharge Planning (§ 403.736(a) and (b))

Section 1861(ss)(1) of the Act defines the term ''Religious Nonmedical Health Care Institution'' (RNHCI) and lists the requirements that a RNHCI must meet to be eligible for Medicare participation.

Section 403.736(a) and (b) of the RNHCI's CoPs, as amended in the November 28, 2003 **Federal Register** (68 FR 66710), requires RNHCIs to have a discharge planning process for patients.

Since the RNHCI's religious tenets prohibit conventional or unconventional medical treatment of a beneficiary, and medical post-institution services are not utilized by RNHCI patients, we believe that extensive discharge requirements are unnecessarily burdensome. Therefore, we proposed a more condensed and flexible process for discharge planning and instructions for RNHCIs. We proposed to remove the requirements at § 403.736(a) and (b), and proposed instead to require RNHCIs to provide discharge instructions to the patient or the patient's caregiver when the patient is discharged home.

The majority of commenters expressed strong support for the proposed changes to the RNHCIs discharge planning process. We did not receive any comments in opposition to the proposed requirement; therefore, we are incorporating the changes as proposed in this final rule.

Comment: One commenter stated that they agreed with allowing flexibility and giving the institution the freedom to determine which patients should be provided a discharge plan. However, they commented that there should be a way to monitor this process to make institutions accountable and not omit providing a discharge plan if a patient needs one.

Response: As for all providers and suppliers, Medicare surveys RNHCIs for compliance with the CoPs. We believe this enforcement process adequately ensures that RNHCIs are correctly interpreting and following our requirements.

Comment: The majority of the commenters stated that they agree with the changes proposed to the discharge planning process at § 403.736(a) and (b). They stated that this change would reduce burden and allow greater flexibility to the RNHCIs.

Response: We appreciate the comments received on the proposed changes for RNHCIs and will finalize the changes as proposed.

Final Rule Action: We are finalizing the proposed changes without changes.

Contact: Mary Collins, (410) 786–3189.

2. Ambulatory Surgical Centers

Section 416.2 of our rules defines an ambulatory surgical center (ASC) as any distinct entity that operates exclusively for the purpose of providing surgical services to patients not requiring hospitalization, in which the expected duration of services would not exceed 24 hours following an admission. The surgical services performed at ASCs are scheduled, primarily elective, non-life-threatening procedures that can be safely performed in an ambulatory setting. We received 99 timely public comments on our proposed changes to the ASC CfC requirements. Commenters included ASC industry associations, healthcare systems, national accreditation organizations, clinician associations, individual ASCs, and clinicians. Overall, the majority of the commenters were supportive of the goals of the proposed changes. Summaries of the major issues and our responses are set forth below.

a. Governing Body and Management; Hospitalization Requirements (§ 416.41(b)(3)(i) and (ii))

We proposed to remove the requirement for a written hospital transfer agreement or hospital physician admitting privileges at § 416.41(b)(3). The requirements in § 416.41(b)(1) and (2) continue to require the ASC to have an effective procedure for the immediate transfer, to a hospital, of patients requiring emergency medical care beyond the capabilities of the ASC and that the hospital must be a local hospital that meets the requirements for payment for emergency services under § 482.2. As part of this revision, ASCs are not precluded from obtaining hospital transfer agreements or hospital physician admitting privileges when possible.

Comment: The comments submitted regarding the removal of the transfer agreement were almost evenly split between supporters and opponents. Specifically, the ASCs supported the removal of the transfer agreement and hospitals were opposed to the removal of the transfer agreement. Comments in support of removal of the written hospital transfer agreement stated that the current requirement is unnecessary, obsolete and extremely burdensome because of the small number of patient transfers, the creation of The Emergency Medical Treatment and Labor Act (EMTALA), and the exhaustive administrative paperwork and negotiation burden that is required when the local hospital system refuses to sign the written hospital transfer agreement. Comments in support of the

removal also stated that ASCs should not be forced to close their businesses because regulations cannot be met due to competition issues with the local hospital and their outpatient surgery center. Comments opposing removal of the written hospital transfer agreement stated that transfer agreements have the potential to ensure that there is a plan for emergencies, that appropriate continued care will be delivered, and that both the ASC and hospital communicate with one another. In addition, we received several comments that suggested the regulation should instead specify that the ASC would be deemed to have met the hospital transfer agreement provision if a ''good faith effort'' was documented. One commenter suggested that instead of an all or nothing provision, ASCs should periodically provide local hospitals with a written notice. The commenter contended that this requirement would notify the hospital of ASC services in the community and the types of patients that are receiving care that may need additional care beyond the capability of the ASC.

Response: We continue to believe that, because of the existing EMTALA regulations, the small number of transfers, and the burden ASCs incur when faced with local hospital competition issues, removing this requirement is necessary and appropriate. We agree that communication between ASCs and hospitals is important; however, we do not agree that a mandated transfer agreement is a necessary or effective method to assure this communication. In response to the commenter's suggestions described above, and to assure that hospitals are aware of the potential for receiving patient transfers from an ASC, we are revising our proposal at § 416.41(b)(3) to require the ASC to periodically provide the local hospital with written notice of its operation and patient population served. For example, the notice would include details such as hours of operation and the procedures that are performed in the ASC. Providing written notice, rather than securing a transfer agreement, will alleviate the administrative burden of negotiating or being denied negotiating opportunities associated with the requirement of a written transfer agreement between the ASC and hospital. We are requiring that the notice be provided ''periodically'' to the local hospital to ensure the ASC keeps the local hospital informed and up-to-date on ASC information and any patient population changes. The ''periodically'' phrasing is similar to the reappraisal requirement for the medical staff privileges in ASCs located at § 416.45(b), ''Medical staff- Standard: Reappraisals'', and is meant to have the same meaning. This change does not preclude those ASCs and hospitals with functional working relationships to continue to have written transfer agreements, which we encourage, and prior preparations in place for patient transfers in the event of an emergency.

b. Patient Admission, Assessment and Discharge (§ 416.52(a)(1), (2), (3) and (4))

The current regulations at § 416.52 require ASCs to ensure that a physician or other qualified practitioner provide a comprehensive medical history and physical assessment (H&P) completed not more than 30 days before the date of the scheduled surgery.

We proposed to remove the current requirements at § 416.52(a) and replace them with requirements under the facility's established policies for pre-surgical medical histories and physical examinations (H&P), including any associated testing, and the operating physician's clinical judgment, to ensure patients receive the appropriate pre-surgical assessments that are tailored for the patient and the type of surgery being performed. We proposed to require each ASC to establish and implement a policy that identifies patients who require an H&P prior to surgery. We proposed that the policy would include the time frame for the H&P to be completed prior to surgery. We proposed that the policy would be required to consider the age of patients, their diagnoses, the type and number of surgeries that are scheduled to be performed at one time, all known comorbidities, and the planned level of anesthesia for the surgery to be performed. ASCs would not be limited to these factors, and would be permitted to include others to meet the needs of their patient populations. Furthermore, we proposed that each ASC's policy would be required to follow nationally recognized standards of practice and guidelines, as well as applicable state and local health and safety laws. To conform to the proposed changes to the medical history and physical examination requirements at § 416.52(a), we proposed to revise the requirement at § 416.47(b)(2), that states ''Significant medical history and results of physical examination,'' by adding ''as applicable.''

Comment: A majority of commenters supported the proposed change to remove the medical H&P examination requirement no more than 30 days before the date of the scheduled surgery, and defer to the ASCs established policies for pre-surgical H&Ps and the operating physician's clinical judgment. The comments agreed that allowing ASCs flexibility to establish patient policies, and encouraging the use of clinician judgment, are appropriate to assure patient health and safety while also reducing the burden on patients and providers, and reducing expenditures on potentially unnecessary pre-operative testing that is performed because it is required by policy. However, a small number of comments supported only part of this change, suggesting instead that CMS should retain the H&P requirement while allowing the ASC the discretion to determine the timeframe for the H&P relative to the date of surgery. Another commenter opposed any changes and recommended retaining the H&P requirement and 30-day time frame. One commenter stated that they believe the burden of assessing patients prior to surgery would be shifted from one provider (the primary care physician) to another (the anesthesiologist), and that allowing ASCs the flexibility to establish their own policies based on their clinical judgment and patient population needs would burden ASCs and healthcare workers, create inefficiencies, and lead to variations in standards of care from facility to facility.

Response: We appreciate the support of the vast majority of commenters, and continue to believe that the change is appropriate to support patient health and safety while eliminating the burdens of potentially unnecessary examinations and tests. The content of ASC-wide policies surrounding the appropriate use of medical histories and physicals, as well as pre-operative testing, could be informed by specialty societies, medical literature, past experience, or other factors. We disagree that variations between facilities would be an inherently undesirable effect of the change; variations to take into account unique patient needs and facility characteristics are preferable to a ''one size fits all'' approach of mandatory 30 day H&Ps. Allowing ASCs and physicians to work together to implement their own policies, based on their clinical judgment and patient population served, will provide the most optimal balance between burden and necessary examinations and testing, by identifying when a medical H&P examination should be completed, if appropriate. We are finalizing the proposal to require ASCs to address certain patient characteristics, such as age, diagnosis, the type and number of procedures, comorbidities and the planned anesthesia level, when

developing their policies and procedures for pre-surgical examinations and testing. We believe this change will ensure those patients who would actually be protected by a medical H&P examination will receive one based on ASC policy, and in a time frame established by that policy, thereby reducing burden on physicians, facilities, and patients. We reiterate that ASCs are still required to perform a patient assessment upon admission before surgery, that the ASC is not precluded from retaining the H&P requirement in facility policies, and that we are not discouraging pre-surgical H&Ps where clinically indicated.

Comment: One commenter expressed concern over the wording of the proposed regulation text in § 416.52(a)(1)(iii), stating that the ASC policy must follow nationally recognized standards of practice and guidelines. The commenter believed the term ''follow'' could be problematic for ASCs, and be interpreted as being required to ''adhere'' to national guidelines that are not delineated, thus depriving the ASC of the ability to determine what clinical practices make the best sense for its patients.

Response: We agree and have revised the regulation text to be consistent with the regulation text that is being finalized for hospital outpatient H&P requirements. We are finalizing the regulation text to state that the ASC policy must be based on any applicable nationally recognized standards of practice and guidelines, and any applicable State and local health and safety laws.

Comment: One commenter asked CMS to coordinate any changes to the regulations with updates to the accreditation organizations (AOs) standards.

Response: National accreditation organizations must meet or exceed CMS standards, and their standards must be updated, as appropriate, to reflect changes in the CMS regulations. As AOs may choose to exceed CMS requirements, so they may choose to retain any or all of the requirements that we are removing in this final rule to the extent that they do not conflict with any of our revisions.

We did not receive any public comments on the proposed technical change to the medical records proposed at § 416.47(b)(2) and are finalizing the technical change to the medical records section as proposed.

Final Rule Action:

1. Rather than deleting, we are finalizing revisions to § 416.41(b)(3) to require ASCs to periodically provide the local hospital with written notice of its operation and patient population served.

2. We are finalizing the proposal to revise the requirement at § 416.47(b)(2), to state ''Significant medical history and results of physical examination, as applicable.''

3. We are finalizing the proposal to eliminate the requirement at § 416.52(a) for each patient to have a medical history and physical assessment completed by a physician not more than 30 days before the scheduled surgery, and replace it with the requirement for ASCs to develop and maintain a policy that identifies those patients who require a medical history and physical examination prior to surgery. In addition, require the policy to include the timeframe for the medical history and physical examination to be completed prior to surgery. The policy must also address, but not be limited to, the following factors: Patient age, diagnosis, the type and number of procedures scheduled to be performed on the same surgery date, known comorbidities, and the planned anesthesia level. Upon admission, each patient must have a pre-surgical assessment completed by a physician or other qualified practitioner in accordance with applicable State health and safety laws, who will be performing the surgery.

4. We are revising § 416.52(a)(1)(iii) to clarify that the ASC policy must be based on nationally recognized standards of practice and guidelines, and applicable State and local health and safety laws.

Contact: CAPT Jacqueline Leach, USPHS, 410–786–4282.

3. Hospice

a. Hospice Aide and Homemaker Services (§ 418.76)

We proposed to revise § 418.76(a)(1)(iv) to remove the requirement that a hospice aide training State licensure program must meet the specific training and competency requirements set forth in § 418.76(b) and (c) in order to be deemed an appropriate qualification for employment. This change would defer to State licensure requirements, except in states where no requirements exist.

Comment: Many comments supported the proposed revision to defer to existing state requirements for hospice aide training, and only impose Federal requirements in the absence of state standards. However, other comments did not support this proposed change, arguing that state education and training standards for hospice aides should not be accepted as being sufficient to assure patient health and safety.

Response: Deference to state-established standards regarding the training and competency of health care professionals is standard practice. States already establish such standards for health care professions such as nursing, laboratory technicians, phlebotomists, and therapists, to name a few. Seventy-six percent of states have already established their own qualification standards for aides, aides furnishing services in those states are already permitted to provide services to individuals through private pay agencies without meeting the Medicare standards, and there is no indication that these already applicable standards are insufficient to assure patient health and safety. As deference to state standards is the norm across the health care spectrum, and as current state standards are already demonstrated to be sufficient to assure patient health and safety, we see no reason to impose a separate Federal standard. Therefore, we are finalizing this proposed change. In the absence of state requirements, hospices will continue to be required to assure that an aide meets the Federal training standards. Furthermore, all hospices in all states will continue to be required to comply with the existing requirements that hospice aides may only perform those skills that are consistent with the training that the aide has received (§ 418.76(g)(2)(iv)), and that, if an area of concern is verified by the hospice during an on-site aide supervision visit, then the hospice must conduct, and the hospice aide must complete, a competency evaluation in accordance with § 418.76(c) and (h)(1)(iii).

b. Drugs and Biologicals, Medical Supplies, and Durable Medical Equipment (§ 418.106(a)(1) and (e)(2)(i))

We proposed to delete the requirements at § 418.106(a)(1), which required hospices to ensure that the interdisciplinary group confers with an individual with education and training in drug management as defined in hospice policies and procedures and State law, who is an employee of or under contract with the hospice, to ensure that drugs and biologicals meet each patient's needs. Meeting each patient's needs would continue to be the responsibility of all Medicare-participating hospices in accordance with the requirements of all other hospice CoPs.

Comment: We received numerous comments that both supported and opposed the proposal to eliminate the process requirement that a hospice must confer with an individual with expertise in medication management regarding

the plan of care for each patient. Many commenters agreed that this process requirement is no longer necessary because this is standard practice in hospices. However, other commenters, while agreeing that it is standard practice, still believe that there is value in having a distinct regulatory requirement to this effect, due to the important role that medications play in hospice care and the potential for safety lapses.

Response: Hospices would continue to be required to comprehensively assess patients on a regular schedule and on an as needed basis in accordance with the requirements of § 418.54(a), (b) and (d), and to assure that each patient's plan of care is developed and continually updated to meet each patient's needs as identified in the assessment process in accordance with the requirements of§ 418.56(b) through (d). These existing regulations, which we are not revising, focus on assuring the outcomes of safe, effective, patient-centered care. Furthermore, hospices will still be required to comply with the quality assessment and performance improvement (QAPI) CoP at § 418.58, which requires hospices to monitor patient outcomes and implement improvement projects to address identified areas of concern. To the extent that patient outcomes are not being achieved due to problems with medication management, both the hospice's internal QAPI program and the external hospice survey process will be capable of identifying and addressing those problems, regardless of the removal of this process requirement. In light of these existing requirements, and in response to the support for the proposed change expressed by a variety of commenters, we are finalizing the proposed change to remove the process requirement at § 418.106(a)(1) without revisions.

We proposed to replace the requirement at § 418.106(e)(2) that hospices provide a physical paper copy of policies and procedures, which are written to guide the actions of hospice staff, with a requirement that hospices provide information regarding the use, storage, and disposal of controlled drugs to the patient or patient representative, and family, which can be developed in a manner that speaks to the perspectives and information needs of patients, families, and caregivers. This information would be provided in a more user-friendly manner, as decided by each hospice. Hospices would be free to choose the content and format(s) that best suits their needs and the needs of their patient population. We proposed to require that, regardless of the format chosen, this information would have to be provided to patients, families and caregivers in a manner that allowed for access to the information on a continual, as-needed basis.

We would continue to require that hospices discuss the information regarding the safe use, storage and disposal of controlled drugs with the patient or representative, and the family/caregiver(s), in a language and manner that they understand to ensure that these parties are effectively educated. This requirement is included in the current hospice CoPs and is consistent with Department of Health and Human Services guidance regarding Title VI of the Civil Rights Act (''Guidance to Federal Assistance Recipients Regarding Title VI Prohibition Against National Origin Discrimination Affecting Limited English Proficient Persons,'' 68 FR 47311, August 8, 2003, *https://www.hhs.gov/civil-rights/for-individuals/special-topics/limited-english-proficiency/guidance-Federal-financial-assistance-recipients-title-VI/*). We continue to expect hospices to utilize technology, such as telephonic interpreting services and any other available resources for oral communication in the individual's primary or preferred language. We would also continue to require that hospices document in the patient's clinical record that the information was provided and discussed.

Comment: We received many comments regarding the proposed change to allow hospices to determine the content and form of the controlled drug storage, use, and disposal notice for patients and families. Commenters universally supported the goal of improving patient and family education on this subject and supported the shift away from providing policies and procedures. However, a few commenters raised concern about the intersection of this change with section 3222 of the recently adopted Substance Use-Disorder Prevention that Promotes Opioid Recovery and Treatment for Patients and Communities Act (''SUPPORT Act'') (Pub. L. 115–271), that requires hospices, which permit their employees to dispose of medications in the patient's home, to provide their written policies and procedures to patients, families and caregivers. This provision, which amends section 302 of the Controlled Substances Act (21 U.S.C. 822), is under the jurisdiction of the Department of Justice.

While most commenters expressed appreciation for the proposal to allow hospices to determine the form and content of the notice, other commenters suggested that CMS should develop education materials that hospices must provide to patients and families. Whether hospice or CMS-generated, commenters suggested that using alternative formats such as pictorial infographics and videos may be valuable tools in communicating this important information. Commenters also suggested that the information should be accessible to all individuals, regardless of impairments or language spoken.

Response: In light of the changes included in section 3222 of the SUPPORT Act, it is not appropriate to finalize this proposed change. However, we encourage hospices to develop easily understood materials that explain safe storage, use, and disposal of controlled drugs to patients, their families, and caregivers in addition to meeting the regulatory requirement to provide a copy of the hospice's clinical policies and procedures. We continue to believe that providing such materials is a positive practice for improving comprehension of this crucial information and improving compliance with safe handling, use, and disposal practices.

c. Hospices That Provide Hospice Care to Residents of a SNF/NF or ICF/IID (§ 418.112(c)(10) and (f))

Section 418.112(f) of the hospice CoPs, as finalized in the 2008 Hospice CoP final rule (73 FR 32088), requires hospices to assure orientation of Skilled Nursing Facility/Nursing Facility (SNF/NF) or ICF/IID staff furnishing care to hospice patients. We proposed to remove § 418.112(f) and add a new requirement at § 418.112(c)(10), ''Written agreement,'' to permit both entities to negotiate the mechanism and schedule for assuring orientation of facility staff.

Comment: While comments supported the intent behind the proposed change to permit hospices and long term care facilities to negotiate the roles and responsibilities for orienting long term care facility staff to the hospice philosophy of care and hospice procedures, some comments did not support moving the topic into the content of the written agreement. Comments stated that requiring this subject to be addressed in the written agreement would create a onetime burden for hospices of renegotiating the written agreement with each long term care facility, and that this burden was not acceptable even in light of the potential long-term regulatory relief of the proposed change. Some comments suggested that the current regulations at

§ 418.112(f) instead be revised to allow for hospices and facilities to negotiate their respective roles and responsibilities outside of the written agreement.

Response: We agree with commenters that the goal of regulatory flexibility is worthwhile, and we appreciate the feedback regarding the scope of the regulatory burden that would be incurred when renegotiating existing contracts with long term care facilities. In light of the burden concerns raised in the comments, we agree that a different approach to achieving the same goal is warranted. We are not finalizing the proposal to move the requirements related to facility staff orientation and training from a standalone requirement to a provision in the written agreement. In order to achieve the original regulatory goal of adding flexibility and reducing hospice costs for this activity, we are revising existing § 418.112(f), Orientation and training of staff, to clarify that a hospice must consult with and thus share responsibility with the facility to assure facility staff orientation and training. We received 26 timely public comments pertaining to all proposed changes to the hospice requirements. Commenters included hospice industry associations, individual hospice providers, national accrediting organizations, clinician associations, and consumer advocacy groups. Overall, the majority of commenters were supportive of the goal of the proposed changes. Comments not directly related to our proposals are summarized below.

Comment: A few comments specifically related to the hospice CoPs were submitted in response to the solicitation for ideas for further burden reduction efforts. Comments included removing the core services requirement for dietary counseling and providing waivers for social worker supervision.

Response: We appreciate the suggestions, and will consider revising the social work supervision requirements in future rulemaking. The hospice interpretive guidelines related to § 418.114(b)(3) (State Operations Manual, Pub. 100–07, Appendix M, *https://www.cms.gov/Regulations-and-Guidance/Guidance/Manuals/downloads/som107ap_m_hospice.pdf,* accessed on January 16, 2019) state, ''Each hospice must employ or contract with at least one MSW to serve in the supervisor role. . . .'' We believe that this existing flexibility regarding contracting for this service, when coupled with the fact that the supervision role can be performed remotely, is adequate to address concerns regarding the provision of social work supervision at this time while we consider this waiver suggestion. Dietary counseling as a core service is a statutory requirement (see section 1861(dd)(2)(A)(ii)(I) of the Act)) and cannot be repealed through regulatory mechanisms.

Comment: We received numerous comments with suggestions related to Medicare payment requirements for hospice services (for example, notice of election requirements and the coverage requirements for continuous home care level of care), use of the CMS Common Working File, hospice quality measures, Medicaid payment issues, and Medicare audits.

Response: These comments are not within the scope of this regulation, which is related to the health and safety standards for Medicare providers. We publish an annual proposed hospice payment rule, and comments related to payment policies and rates may also be submitted to that rule for consideration. All out of scope comments have been shared with the appropriate components within CMS.

Final Rule Action:

1. We are finalizing the proposed changes to §§ 418.76(a)(1)(iv) and 418.106(a)(1) without change. We are not finalizing our proposed change to 418.106(e)(2)(i).

2. Revise § 418.112(f) to require hospice and facilities to share responsibility for facility staff orientation and training.

Contact: Danielle Shearer, 410–786–6617.

4. Hospitals

a. Quality Assessment and Performance Improvement Program (§ 482.21)

We proposed a new standard at § 482.21(f), ''Unified and integrated QAPI program for multi-hospital systems.'' We would allow that for a hospital that is part of a hospital system consisting of two or more separately certified hospitals subject to a system governing body legally responsible for the conduct of each hospital, the system governing body could elect to have a unified and integrated QAPI program for all of its member hospitals after determining that such a decision is in accordance with all applicable State and local laws. The system governing body would be responsible and accountable for ensuring that each of its separately certified hospitals meets all of the requirements of this section. Each separately certified hospital subject to the system governing body would have to demonstrate that: The unified and integrated QAPI program was established in a manner that took into account each member hospital's unique circumstances and any significant differences in patient populations and services offered in each hospital; and the unified and integrated QAPI program establishes and implements policies and procedures to ensure that the needs and concerns of each of its separately certified hospitals, regardless of practice or location, are given due consideration, and that the unified and integrated QAPI program has mechanisms in place to ensure that issues localized to particular hospitals are duly considered and addressed.

Comment: Most commenters supported the proposal to allow hospitals that are part of a multi-hospital system to have a unified and integrated QAPI program. A few commenters expressed appreciation for the expanded flexibility that this proposal would afford hospitals by reducing burden, increasing efficiencies, and eliminating the duplication of efforts.

A few commenters generally supported this proposal, but recommended that individual, hospital-specific data be recorded and made available to the system's governing body and the public. These data, the commenters stated, would help to identify best practices and processes from facilities that are excelling in certain areas and will account for and address performance outliers across the broader hospital system. Finally, another commenter expressed concern that the proposed requirement might group QAPI scores together and hide poor performance, which they stated may mislead consumers about the site-specific care they are receiving.

Response: We thank the commenters for their support. We believe that a hospital's governing body should be afforded the option of unifying and integrating the various member hospitals within their multi-hospital system into a unified QAPI program. Such a model would incorporate each individual hospital's QAPI program, which would enable increased efficiencies, innovations, provider flexibility, and allow for the dissemination of best practices for patient care while also potentially improving patient safety and outcomes. We also believe that a unified QAPI model is a natural progression for a multi-hospital system that utilizes a system governing body (as allowed at § 482.12) and a unified medical staff (as allowed at § 482.22).

In response to the commenter's concerns regarding individual hospital data, we agree that hospital specific data should be used to address specific

individual hospital issues and to identify and disseminate best practices. As we have proposed, ''the system governing body is responsible and accountable for ensuring that each of its separately certified hospitals meets all of the requirements of this section.'' We do not see this requirement as prohibiting an individual hospital from reporting its own data to the governing body and most especially to the unified and integrated QAPI program, since we are requiring that each separately certified hospital in the system demonstrate that the unified and integrated QAPI program takes into account each member hospital's unique circumstances as well as any significant differences in patient populations and services offered in each hospital. Each hospital must also demonstrate that the unified and integrated program has mechanisms in place to ensure that issues localized to particular hospitals are duly considered and addressed.

We are unclear as to what the commenter means by ''QAPI scores'' and to what the commenter is referring regarding the grouping of ''QAPI scores together'' in order to ''hide poor performance.'' The current QAPI CoP does not require anything related to ''QAPI scores'' and we are not finalizing any such requirements in this rule. We believe that the commenter might have been confusing QAPI with the various data that are collected for the Inpatient Quality Reporting Program. These programs are unrelated and the quality reporting program remains unchanged by this rule.

Comment: One commenter recommended that CMS include the following language in proposed § 482.21(f)(2) regarding a hospital's medical staff: ''. . . Including consulting with each of its separately certified hospital's medical staff.'' The commenter stated that a hospital's medical staff brings a unique clinical perspective to the activities of the governing body with regard to quality and safety issues. The commenter also urged CMS to clarify that the proposed requirement will not include an Ongoing Professional Practice Evaluation and Focused Professional Practice Evaluation, which they state, is the responsibility of the hospital's medical staff.

Response: While we agree with the commenter that a hospital's organized medical staff brings a unique clinical perspective to the activities of the governing body with regard to quality and safety issues, we believe that a number of the hospital CoPs already effectively ensure that this clinical perspective is heard by the governing body while also holding the medical staff responsible and accountable for these patient safety and quality of care issues. For example, the provision at § 482.12(a)(1), under the hospital Governing body CoP, requires that the hospital's governing body must, ''consult directly with the individual assigned the responsibility for the organization and conduct of the hospital's medical staff, or his or her designee. At a minimum, this direct consultation must occur periodically throughout the fiscal or calendar year and include discussion of matters related to the quality of medical care provided to patients of the hospital.'' This requirement applies to all hospitals, governing bodies, and medical staffs, regardless of organizational structure.

Additionally, the QAPI CoP itself, at § 482.21(e), contains a standard that requires the hospital medical staff (among other hospital leaders) to be responsible and accountable for ensuring that the QAPI program is focused on improved quality of care and patient safety. Similarly, the Medical staff CoP requirement at § 482.22(b) requires that the hospital's medical staff ''must be well organized and accountable to the governing body for the quality of the medical care provided to patients.'' And finally, at § 482.22(b)(4)(iii) and (iv), the CoPs require that a separately certified hospital, which uses a unified and integrated medical staff accountable to a system governing body, must demonstrate that its unified and integrated medical staff: (1) Is established in a manner that takes into account each member hospital's unique circumstances and any significant differences in patient populations and services offered in each hospital and (2) establishes and implements policies and procedures to ensure that the needs and concerns expressed by members of the medical staff, at each of its separately certified hospitals, regardless of practice or location, are given due consideration, and that the unified and integrated medical staff has mechanisms in place to ensure that issues localized to particular hospitals are duly considered and addressed. Therefore, we do not believe that any additional language is needed here.

Comment: One commenter requested that CMS include ''affiliates'' and CAHs in the unified and integrated QAPI and infection control requirements. The commenter defines ''affiliates'' as hospitals and providers within a healthcare system that may bill under separate Tax Identification Numbers (TINs). The commenter noted that this option would afford hospitals additional flexibility and ease administrative burden.

Response: We are not clear on whether the commenter is confusing TINs and CMS Certification Numbers (CCNs), which CMS uses to distinguish separately certified hospitals, CAHs, and other Medicare-participating providers and suppliers for survey and certification purposes in determining compliance with the CoPs and CfCs specific to each provider and supplier type. We do not use TINs in our determination of when a facility requires separate certification.

A CAH must be separately evaluated for its compliance with the CAH CoPs (found at 42 CFR part 485, subpart F), which would not include the requirements included in this section of the rule since these are hospital CoPs. It would not be possible to evaluate the CAH's compliance as part of an evaluation of a hospital's compliance. However, this does not preclude a multi-hospital system's single governing body from also serving as the CAH's governing body, so long as the governing body clearly identifies the policies and decisions that are applicable to the CAH.

Final Rule Action: We are finalizing the requirements in § 482.21(f), without modification.

Contact: Alpha-Banu Wilson, 410–786–8687.

b. Medical Staff, Medical Records Services, and Surgical Services (§§ 482.22, 482.24, and 482.51)

Hospital Medical History and Physical Examination Requirements

We proposed to revise the current requirements at § 482.22(c)(5)(i) and (ii) with respect to medical staff bylaws, and to allow for an exception under the proposed paragraph (c)(5)(iii). We are retaining the current language in paragraphs (c)(5)(i) and (ii) that the H&P, and any update to it, must be completed and documented by a physician (as defined in section 1861(r) of the Act), an oral and maxillofacial surgeon, or other qualified licensed individual in accordance with State law and hospital policy. We proposed to include this same language regarding who can complete and document the assessment in the proposed provision at § 482.22(c)(5)(iii). This provision would require the medical staff bylaws to state that an assessment of the patient (in lieu of the requirements of paragraphs (c)(5)(i) and (ii)) be completed and documented after registration, but prior to surgery or a procedure requiring anesthesia services, when the patient is

receiving specific outpatient surgical or procedural services and when the medical staff has chosen to develop and maintain a policy that identifies, in accordance with the requirements at paragraph (c)(5)(v), specific patients as not requiring a comprehensive medical history and physical examination, or any update to it, prior to specific outpatient surgical or procedural services. The proposed paragraphs (c)(5)(iii) and (iv) would require the medical staff to develop and maintain a policy that identifies those patients for whom the assessment requirements of paragraph (c)(5)(iii) would apply. We also proposed a new requirement at paragraph (c)(5)(v) for a medical staff that chooses to develop and maintain a policy for the identification of specific patients to whom the assessment requirements in paragraph (c)(5)(iii) would apply. Under this proposed paragraph, if the medical staff exercised the option to perform a simplified assessment in some cases, the written policy would have to indicate the specific outpatient surgical or procedural services to which it applied. The policy for each procedure would need to indicate the hospital's consideration of patient age, diagnoses, the type and number of surgeries and procedures scheduled to be performed, comorbidities, and the level of anesthesia required for the surgery or procedure; nationally recognized guidelines and standards of practice for assessment of specific types of patients prior to specific outpatient surgeries and procedures; and applicable State and local health and safety laws.

In order to make clear that this proposed requirement would be an option that a hospital and its medical staff could elect to use at their discretion, we proposed language that states ''the provisions of paragraphs (c)(5)(iii), (iv), and (v) do not apply to a medical staff that chooses to maintain a policy that adheres to the requirements of paragraphs (c)(5)(i) and (ii) for all patients.'' In other words, a hospital and its medical staff would be free to exercise their clinical judgment in determining whether a policy for identifying specific patients as not requiring a comprehensive H&P (or any update to it) prior to specific outpatient surgical or procedural services, and instead requiring only a pre-surgical assessment for these patients, would be their best course. Or, if a hospital and its medical staff decided against such a policy, then only the current H&P and update requirements (at §§ 482.22, 482.24, and 482.51) would continue to apply and the proposed requirements for this CoP, as well as those proposed for §§ 482.24 and 482.51, would not apply.

For the current CoP at § 482.24, ''Medical Record Services,'' we specified that we would revise the provisions at § 482.24(c)(4)(i)(A) and (B) regarding an H&P and its update to allow for an exception under proposed paragraph (c)(4)(i)(C) where we proposed to add a new requirement that, if applicable, the medical record would have to document assessment of the patient (in lieu of the requirements of paragraphs (c)(4)(i)(A) and (B)) after registration, but prior to surgery or a procedure requiring anesthesia services, for specific outpatient surgical or procedural services.

We also proposed to revise the current CoP, § 482.51, ''Surgical Services,'' to allow for an exception to the requirements at § 482.51(b)(1)(i) and (ii). Under proposed paragraph (b)(1)(iii), we proposed a new requirement that, prior to surgery or a procedure requiring anesthesia services and except in the case of emergencies, an assessment of the patient must be completed and documented after registration (and in lieu of the requirements of paragraphs (b)(1)(i) and (ii)). This proposed requirement would only apply in those instances when the patient is receiving specific outpatient surgical or procedural services and when the medical staff has chosen to develop and maintain a policy that identifies, in accordance with the requirements at § 482.22(c)(5)(v), specific patients as not requiring a comprehensive medical history and physical examination, or any update to it, prior to specific outpatient surgical or procedural services.

Comment: As reflected in the public comments for similar proposed changes for ASCs that we have previously discussed, the majority of comments submitted were supportive of the proposed changes that would give a hospital and its medical staff the flexibility to establish a policy for a pre-surgical or pre-procedural assessment of the patient (in lieu of the requirements of paragraphs (c)(5)(i) and (ii) for a comprehensive pre-surgical or pre-procedural H&P and its update), provided that the patient assessment is completed and documented after registration, but prior to surgery or a procedure requiring anesthesia services, and the patient is receiving specific outpatient surgical or procedural services as outlined in the policy. Several commenters stated that they appreciated the regulatory flexibility to establish specific patient policies such as these as long as they are based on recognized guidelines and best practices as well as on the clinical judgment of the medical staff. They stated that they believe such parameters are necessary to ensure patient health and safety while still allowing for reasonable methods to reduce the burden on both patients and providers, including the additional expense of pre-operative testing that is often performed unnecessarily on many patients undergoing only minor outpatient procedures and may be an unintended consequence of the requirement for a comprehensive H&P within 30 days of admission or registration for all hospital patients regardless of the surgery or procedure that they are undergoing.

Response: We thank the commenters for their support and agree that the flexibility provided by these revisions will reduce unnecessary regulatory burden affecting both patients and providers. We believe that it also has the potential to greatly reduce unnecessary costs associated with the current requirements for a comprehensive H&P for a specific class of patients undergoing low-risk outpatient surgeries and procedures for which there exist clear guidelines regarding the extent of pre-operative patient assessment and testing needed.

Comment: Some commenters either did not support these changes or had certain reservations about them, even though they supported the overall intent of the changes. One commenter stated that the change will not serve those beneficiaries with advanced illness well, recommended that the rule be revised to require that the assessment must be consistent with the patient's situation, medical complexity, and the proposed procedure, and believes that the requirements must err on the side of more, rather than less, comprehensiveness. Another commenter stated that while they appreciated CMS' recognition that the timing of H&Ps may, in some instances, be duplicative and cause unnecessary burden, they were aware of cases where the current H&P requirements prevented an adverse event. They also stated that the proposed revisions will be just as, and possibly more, burdensome than the current requirements; that CMS should consider comments before proceeding; and that, while they agree that there seems to be no evidence supporting a strict 30-day requirement, additional flexibility would be appreciated. One commenter stated that they believe the burden of assessing patients prior to surgery would be shifted from one provider (the primary care physician or the surgeon) to another (the anesthesiologist), and

expressed concerns over the increased responsibility and liability that might be then imposed on an anesthesiologist (beyond his or her primary responsibility for anesthesia services and care provided to a patient) for a surgery or procedure in which he or she was not the operating practitioner. A few commenters also expressed concerns over whether reimbursement requirements and rates would now change for outpatient surgeries and procedures that would only require an assessment and not a comprehensive H&P, including concerns over which practitioner would now be reimbursed for the assessment (for example, the patient's primary care practitioner versus the operating practitioner).

Response: We appreciate the concerns raised by commenters and have thoroughly considered them. However, we must again note and emphasize to readers that this revision will be a regulatory option available to hospitals and one that a hospital and its medical staff must make the policy decision to exercise. We expect that this decision will be based on the clinical judgment and recommendations of the medical staff, which must be supported by nationally recognized evidence and guidelines for best practices in this area, in order for the hospital to determine if the best course would be to establish a policy for identifying specific patients as not requiring a comprehensive H&P (or any update to it) prior to specific outpatient surgical or procedural services, and instead require a more limited pre-surgical assessment for these patients. We expect that most hospitals and their medical staffs will perform risk/benefit analyses to inform their decisions. We also expect that a number of these hospitals, based on their analyses, will decide to maintain a policy that continues to follow the current H&P and update requirements (at §§ 482.22, 482.24, and 482.51) and will not choose to exercise this option in any way. Conversely, we also expect that some will choose to exercise this option fully and to the broadest extent possible while still remaining in compliance with the requirements finalized. We further expect that another significant subset of hospitals will fall somewhere in the middle in their policy decisions and will most likely elect to exercise this option within an even more narrow and stringent set of parameters than CMS is requiring here. The regulatory flexibility and framework of these final requirements will allow each hospital to establish and tailor its own policy parameters according to its specific patient populations, individual institutional needs and resources, and own medical staff recommendations as long as the policies and procedures established and implemented meet or exceed the requirements finalized in this rule. As finalized here, these requirements, while providing a hospital with an alternative and less burdensome approach to pre-surgical patient assessment, will also at the same time ensure that a hospital takes into consideration all patient safety factors and quality of care issues, such as the degree of complexity of the patient's medical condition as well as that of the planned procedure itself, when it establishes a process to identify those patients to whom such a policy would apply.

In response to the commenter who stated that, under this new option, the assessment of patients prior to surgery will be ''shifted from one provider (the primary care physician or the surgeon) to another (the anesthesiologist),'' we note that the Anesthesia services CoP contains a separate provision (separate and distinct from the H&P, update, and pre-surgical assessment requirements in the Surgical services CoP) that requires that a ''. . . preanesthesia evaluation [be] completed and documented by an individual qualified to administer anesthesia . . .'' and that it must be ''. . . performed within 48 hours prior to surgery or a procedure requiring anesthesia services.'' The anesthesiologist is responsible for this evaluation, but not for the H&P, update, and pre-surgical assessment requirements that we are finalizing here. While an anesthiologist could certainly qualify to perform any of these pre-surgical assessments, we expect the operating practitioner, who is also responsible for the pre-, intra-, and post-operative care of the patient and must be a physician (as defined in section 1861(r) of the Act), an oral and maxillofacial surgeon, or, in accordance with State law and hospital policy, another qualified licensed individual (who would most likely be a member of the operating practitioner's team, such as an NP or PA, and who, by extension, would also be responsible for the care of the patient) to perform the pre-surgical assessment as required in this final rule. If a hospital and its medical staff choose to establish policies and procedures that delineate the duties and responsibilities of any individual anesthiologist (or any individual qualified to administer anesthesia) to include performance of the pre-surgical assessments included under this rule, then the hospital would need to demonstrate that these pre-surgical assessments are separate and distinct from the pre-anesthesia evaluations of patients required at § 482.52. Furthermore, a hospital must also ensure that any such policies and procedures, which assign these pre-surgical assessment duties and responsibilities to an individual anesthiologist (or an individual qualified to administer anesthesia) as discussed here, are not only in accordance with State law, but are also consistent in this regard with the current standards of both anesthesia care and surgical care.

The comments regarding reimbursement requirements and rates for outpatient surgeries and procedures are outside the scope of the CoPs and this rule.

Comment: A few commenters were concerned about compliance with the revised requirements if no clear and recognized guidelines or recommendations exist for pre-surgical patient assessment for specific classes of patients undergoing certain outpatient surgeries and procedures.

Response: The revised requirements, which allow for the option of establishing a policy for identification of specific patients to whom the assessment requirements in § 482.22(c)(5)(iii) would apply, are conditioned upon a hospital and its medical staff demonstrating evidence that the specific parameters required in this final rule are met. A hospital and its medical staff should not include those classes of patients and those outpatient surgeries and procedures in its pre-surgical patient assessment policy if the hospital finds that it cannot meet the requirements we are finalizing at §§ 482.22(c)(5)(v), including the requirement that the medical staff must demonstrate evidence that its policy is based on nationally recognized guidelines and standards of practice for the assessment of specific types of patients prior to specific outpatient surgeries and procedures.

Final Rule Action: We are finalizing the requirements in §§ 482.22, 482.24, and 482.51, with only minor modifications. Specifically, we are changing the term ''oromaxillofacial surgeon'' to the correct term of ''oral and maxillofacial surgeon'' where indicated.

Contact: CAPT Scott Cooper, USPHS, 410–786–9465.

c. Medical Staff: Autopsies (§ 482.22(d))

We proposed to remove the requirement at § 482.22(d), which states that a hospital's medical staff should attempt to secure autopsies in all cases of unusual deaths and of medical-legal

and educational interest. The mechanism for documenting permission to perform an autopsy must be defined and there must be a system for notifying the medical staff, and specifically the attending practitioner, when an autopsy is being performed.

Comment: Several commenters agreed with the proposal, which they stated would remove duplicative administrative work and allow hospitals to defer to State requirements when an autopsy is necessary. Many commenters, including national associations representing medical examiners and pathologists, disagreed with the removal of the requirement that a hospital's medical staff attempt to secure autopsies for unusual deaths or educational purposes. The commenters stated that hospitals should attempt to obtain family permission for autopsies related to deaths resulting from questions about efficacy of treatment, for educational purposes, or for issues of unintended outcomes of treatment or medical uncertainty and these commenters also expressed concern that the removal of this proposal would lead to a further reduction in an already low national autopsy rate.

However, many of these commenters stated that hospitals should not be required to attempt to obtain family permission, or perform autopsies, in cases of medical-legal interest. In those circumstances, the commenters stated, hospitals should report the death to, and consult with, the authority of their local medical examiner, coroner, or medicolegal death investigative authority.

Finally, one commenter requested that CMS specifically state that hospitals are not prohibited from performing autopsies.

Response: We agree that hospitals should not attempt to secure autopsies in medical-legal cases without first contacting their State's medical examiner or medical authority, in accordance with their State's laws. We will defer to state law on this issue, since each State has their own standards and laws regarding the performance of autopsies for medical-legal purposes, and we therefore are removing this as a requirement in the CoPs for hospitals. Furthermore, we believe that it is appropriate to remove the duplicative and burdensome requirement that hospitals attempt to secure autopsies for other cases of unusual deaths or for educational interest. We clarify that removing this requirement would not prohibit hospitals from performing autopsies and we believe that hospitals will implement their own policies regarding autopsies. While we understand the commenter's concerns regarding the decline in the national autopsy rate, we disagree that the removal of this specific requirement will cause a measurable decrease in the autopsy rate, impact quality of care, or dissuade hospitals from performing autopsies. As commenters themselves have noted, there are various causes that may have contributed to the reduction in the autopsy rate including risk adversion due to litigation concerns and concerns about reimbursement rates, and we have no additional evidence that would lead us to the conclusion that the removal of this requirement would exacerbate these numbers. We therefore are finalizing our proposal to remove the requirements at § 482.22(d). Although we are finalizing our proposal, we note that the removal of this requirement should not be construed as a diminution of our support for hospitals continuing to perform autopsies for various purposes, and we encourage hospitals to establish policies regarding autopsies, where appropriate.

Comment: A few commenters suggested that all hospital admissions require the patient (or his or her representative) to affirmatively allow or prohibit an autopsy in the event of death. One commenter also stated that autopsies should be required for any hospital death, unless explicitly rejected by next of kin.

Response: Mandating that hospitals perform autopsies, or that hospitals ask permission to perform an autopsy upon a patient's admission, would be unduly burdensome to hospitals and contrary to the purpose of the CoPs, which establish baseline health and safety requirements. However, hospitals may choose to establish their own policy that would require patients or their representatives to permit or decline autopsies upon admission, if they believe such a requirement is appropriate. As we previously stated, there is no prohibition against autopsies and hospitals are free to enact policies regarding autopsies if they choose to do so.

Additionally, requiring hospitals to perform autopsies could potentially conflict with State and local laws regarding autopsies for medical-legal cases. For instance, certain State laws require that hospitals report deaths arising from medical-legal circumstances to their local medical examiner or other authoritative body, so that a determination can be made as to whether an autopsy must be performed.

Final Rule Action: We are finalizing the proposal to remove § 482.22(d), without modification.

Contact: Alpha-Banu Wilson, 410–786–8687.

d. Infection Control (§ 482.42)

We proposed a new standard at § 482.42(c), ''Unified and integrated infection control program for multi-hospital systems.'' Like the proposed requirements for a unified and integrated QAPI program, the proposed standard for infection control would allow that for a hospital that is part of a hospital system consisting of multiple separately certified hospitals subject to a system governing body legally responsible for the conduct of each hospital, such system governing body could elect to have a unified and integrated infection control program for all of its member hospitals after determining that such a decision was in accordance with all applicable State and local laws. The system governing body would be responsible and accountable for ensuring that each of its separately certified hospitals met all of the requirements of this section. Each separately certified hospital subject to the system governing body would have to demonstrate that the unified and integrated infection control program: (1) Was established in a manner that took into account each member hospital's unique circumstances and any significant differences in patient populations and services offered in each hospital; (2) established and implemented policies and procedures to ensure that the needs and concerns of each of its separately certified hospitals, regardless of practice or location, are given due consideration; (3) had mechanisms in place to ensure that issues localized to particular hospitals are duly considered and addressed; and (4) designated a qualified individual(s) at the hospital with expertise in infection prevention and control to be responsible for communicating with the unified infection control program, for implementing and maintaining the policies and procedures governing infection control, and for providing infection prevention education and training to hospital staff.

Comment: Most commenters supported the proposal to allow hospitals that are part of a multi-hospital system to have a unified and integrated infection control program. The proposed rule included a specific request for public comment on whether there are any other programs currently required under the CoPs for each separately certified hospital, beyond the QAPI and Infection control programs proposed here, that stakeholders believe would likewise be better managed under a system governing body legally

responsible for the conduct of each separately certified hospital. In response, we received comments asking CMS for further revisions to the CoPs, like those proposed for QAPI and infection control programs here (and with specific mention of revising the Nursing services CoP in this way), to allow for similar departmental and operational integration among hospitals within a multi-hosptial system with a single governing body. The commenters stated that expansion of this flexibility for other hospital services, departments, units, and programs would reduce operational burden for individual hospitals, ensure the proper level of staff expertise for member hospitals, and improve the quality and continuity of care for all patients served within the system. A few commenters also expressed appreciation for the expanded flexibility that this proposal would afford hospitals by reducing burden, increasing efficiencies, and eliminating the duplication of efforts.

One commenter encouraged CMS to apply this approach to situations when a multi-hospital system's providers have to fulfill additional requirements stemming from Medicaid or Medicare managed care plans or other external regulatory entities. The commenter suggested the mandated training related to the special needs plan models of care (42 CFR 422.101(f)(2)(ii)) as an example of how this could be applied. The commenter stated that a multihospital system with a unified infection control program as allowed under the requirements finalized in this rule, and that is also potentially participating in an ACO, would most certainly meet the Model of Care training requirement. This commenter also suggested an alternative approach where ACO participants would be deemed as meeting the Model of Care requirement for all other external regulatory entities by meeting the unified infection control program requirements finalized here.

Response: We thank the commenters for their support. We believe that a hospital's governing body should be afforded the option of unifying and integrating the various member hospitals within their multi-hospital system into a unified infection control program. As we discussed for unified and integrated QAPI programs, such a model would incorporate each individual hospital's infection control program, which would enable increased efficiencies, innovations, provider flexibility, and allow for the dissemination of best practices for patient care while also potentially improving patient safety and outcomes. We also believe that a unified infection control model is a natural progression for a multi-hospital system that utilizes a system governing body (as allowed at § 482.12), a unified medical staff (as allowed at § 482.22), and a unified QAPI program (as finalized in this rule at § 482.12).

The comments and recommendations regarding the application of the unified infection control model and its CoP requirements to any additional requirements mandated by Medicare and Medicaid managed care plans or other external regulatory entities are outside the scope of the CoPs and this rule.

Final Rule Action: We are finalizing the proposed requirements in § 482.42. Moreover, in addition to revisions proposed and finalized for the Hospital/CAH Innovation Rule regarding Antibiotic Stewardship Programs (ASPs) (now part of the Infection Prevention and Control CoP discussed in Section III.B.6. of this final rule and finalized here at § 482.42), we are finalizing changes to § 482.42 that will now address the designated and qualified individual(s) at the hospital responsible for communicating with the unified infection control program, for implementing and maintaining the policies and procedures governing infection control, and for providing infection prevention education and training to hospital staff with regard to the ASP as well. We are also making other minor modifications to this section to finalize changes proposed in the Hospital/CAH Innovation Proposed Rule. All of these changes are discussed later in Section III.B.6. of this final rule.

Contact: CAPT Scott Cooper, USPHS, 410–786–9465.

e. Special Requirements for Hospital Providers of Long-Term Care Services (''Swing-Beds'') (§ 482.58(b)(1), (4), (5), and (8), and Identical CAH Requirements: § 485.645(d)(1), (4), (5), (6), and (7))

Hospitals providing swing-bed services must meet all of the requirements at 42 CFR part 482, which includes the swing-bed requirements at § 482.58 for patients receiving swing-bed services, and CAHs providing swing-bed services must meet all of the requirements at 42 CFR part 485, subpart F, which includes the swing-bed requirements at § 485.645 for patients receiving swing-bed services. The swing-bed requirements within the hospital and CAH CoPs include a subset of cross-referenced long-term care requirements contained in 42 CFR part 483, subpart B, for which hospital and CAH swing-bed providers are surveyed as they are for all of the CoPs in their respective programs. We have determined that some of the cross-referenced long-term care requirements for hospitals and CAH swing-bed providers are unnecessary and unduly burdensome, given their focus on ''residents'' and longer length of stays, which we believe are not relevant to swing-bed patients. Thus, we proposed to remove the following requirements: §§ 482.58(b)(1) and (c) and 485.645(d)(1) (incorporating long-term care facility requirements at § 483.10(f)(9)). Under our current regulations at § 483.10(f)(9), the resident has a right to choose to, or refuse to, perform services for the facility, and the facility must not require a resident to perform services for the facility. Regulations at §§ 482.58(b)(1) and 485.645(d)(1) incorporate this resident right by reference.

We expect hospital and CAH swing-bed providers who do offer patients the option of providing services for the facility to have current policies and procedures that reflect this policy that includes protocol for establishing an agreement between the two parties.

Comment: Commenters universally supported the proposal to remove the provision requiring hospitals and CAH swing-bed providers to provide residents with the right to choose to, or refuse to, perform services for the facility, and not requiring a resident to perform services for the facility. As with the majority of the hospital and CAH swing-bed proposals, commenters noted that this requirement is unnecessary, the source of confusion, or is unduly burdensome.

Response: We appreciate the comments received and continue to believe that this change is appropriate.

Final Rule Action: We are finalizing this proposed change without revisions.

§§ 482.58(b)(4) and 485.645(d)(4) (incorporating long-term care facility requirements at § 483.24(c)): The facility must provide, based on the comprehensive assessment and care plan and the preferences of each resident, an ongoing program to support residents in their choice of activities and the activities program must be directed by a qualified professional who is a qualified therapeutic recreation specialist or an activities professional. Patients receiving swing-bed services in a hospital or CAH are not long term residents of the facility and generally only receive swing-bed services for a brief period of time for transition after the provision of acute care services. We expect that for those patients who receive swing-bed services for an extended period of time, their nursing care plan—as required under § 482.23(b)(4) for hospitals and

§ 485.635(d)(4) for CAHs—is based on assessing the patient's nursing care needs and will support care that holistically meets the needs of the patient, taking into consideration physiological and psychosocial factors.

Comment: The majority of commenters were supportive of the proposed removal of the requirement for hospital and CAH swing-bed providers to provide an ongoing program to support residents in their choice of activities and have an activities program that is directed by a qualified professional. As with the majority of the hospital and CAH swing-bed proposals, commenters noted that this requirement is unnecessary, the source of confusion, or is unduly burdensome due to the limited length of stay for most patients receiving swing-bed services. Commenters generally agreed that the activity needs of those patients who receive swing-bed services for an extended period of time would be met via the hospital and CAH nursing care plan requirements.

However, one commenter noted that in the event a swing-bed patient receives care for an extended period of time, the nursing care plan will not include interest-based group and individual activities that support the patient's physical, mental and psychosocial well-being. The commenter noted that therapeutic or recreational activities differ significantly from the goals that normally would be identified in a nursing care plan.

Response: We appreciate the comments received and continue to believe that this change is appropriate. It is expected that hospitals and CAHs, using an interdisciplinary approach, are providing services that meet the needs of all of their patients, including those receiving swing-bed services, regardless of their length of stay. In addition, nursing care plans are intended to provide direction on the type of nursing care the needed by the patient, stemming from the patient's diagnoses, that is organized based on the specific needs of the patient. The care plan is dynamic and should change as the needs of the patient change. As a result, if the needs of the patient include interest-based group and individual activities that support the patient's physical, mental and psychosocial well-being, we expect that the hospital or CAH will provide these services to the patient.

Final Rule Action: We are finalizing this proposed change without revision.

§§ 482.58(b)(5) and 485.645(d)(5) (incorporating long-term care facility requirements at § 483.70(p)): Any facility with more than 120 beds must employ a qualified social worker on a full-time basis.

In accordance with the hospital and CAH swing-bed requirements, hospital swing-bed providers are not permitted to have more than 100 beds while CAH swing-bed providers are not permitted to have more than 25 beds for the provision of inpatient or swing-bed services. Based on feedback from stakeholders, removing this requirement would eliminate confusion for providers and accreditation organizations.

Comment: Commenters universally supported the proposal to remove the provision requiring hospitals and CAH swing-bed providers with more than 120 beds to employ a full-time social worker. As with the majority of the hospital and CAH swing-bed proposals, commenters noted that this requirement is unnecessary, the source of confusion, or is unduly burdensome.

Response: We appreciate the comments received and continue to believe that this change is appropriate.

Final Rule Action: We are finalizing this proposed change as proposed.

§§ 482.58(b)(7) and 485.645(d)(7) (incorporating the long-term care facility requirement at § 483.55(a)(1)): Under our long-term care facility requirements, the facility, must provide routine and emergency dental services to meet the needs of each resident, or obtain them from an outside resource, in accordance with § 483.70(g).

Hospitals and CAHs are required to provide care in accordance with the needs of the patient that have been identified in such patients' plans of care; this could include non-emergency dental care. We expect that hospital swing-bed providers are currently addressing the emergent dental care needs of their patients under the existing hospital CoP at § 482.12(f)(2), which requires that hospitals have written policies and procedures for appraisal of emergencies, initial treatment, and referral when appropriate. Similarly, we expect that CAH swing-bed providers are currently addressing the emergent dental care needs of their patients under the existing emergency services CoP at § 485.618, which requires CAHs to provide emergency care necessary to meet the needs of its inpatients and outpatients. As a result, we believe that this portion of the requirement is duplicative, given the current CoP requirements.

Comment: Commenters universally supported the proposal to remove the provision requiring hospitals and CAH swing-bed providers provide or obtain from an outside resource routine and emergency dental services to meet the needs of each resident. As with the majority of the hospital and CAH swing-bed proposals, commenters noted that this requirement is unnecessary, the source of confusion, or is unduly burdensome.

In addition, the most recent guidelines from the American Dental Association note that patients should have regular dental visits, with the frequency determined by their dentist to accommodate for the patients' current oral health status and health history (American Dental Association, *https://www.ada.org/en/press-room/news-releases/2013-archive/june/american-dental-association-statement-on-regular-dental-visits*).

Response: We appreciate the comments received and continue to believe that this change is appropriate.

Final Rule Action: We are finalizing this proposed change as proposed.

Contact: Kianna Banks, 410–786–3498.

f. Special Requirements for Psychiatric Hospitals (§ 482.61(d))

We believe that as currently written and implemented, this requirement requires clarification regarding the language that progress notes ''must be recorded by the doctor of medicine or osteopathy responsible for the care of the patient as specified in § 482.12(c), nurse, social worker and, when appropriate, others significantly involved in active treatment modalities.'' We believe that non-physician practitioners, including physician assistants, nurse practitioners, psychologists, and clinical nurse specialists, when acting in accordance with State law, their scope of practice, and hospital policy, should have the authority to record progress notes of psychiatric patients for whom they are responsible. Therefore, we proposed to allow the use of non-physician practitioners or MD/DOs to document progress notes of patients receiving services in psychiatric hospitals.

Comment: Commenters were mostly supportive of the proposal to clarify the documentation requirements for recording progress notes in the patient's medical records for patients receiving services in psychiatric hospitals. Commenters noted that the proposed change would reduce barriers for care providers and will give non-physician practitioners expanded access to document the provision of the health care to patients, resulting in improved continuity of care.

Response: We appreciate the comments received and continue to believe that this change is appropriate.

Comment: One commenter opposed the proposed change, noting that the existing regulatory language already permits non-physician practitioners to document progress notes in the patient's medical records for patients receiving services in psychiatric hospitals; therefore, the change would be unlikely to produce costs savings from incorporating psychologists or other licensed practitioners in this requirement. Another commenter opposed the inclusion in the proposed rule of psychologists in the list of non-physician practitioners allowed to document the patient's progress notes. The commenter notes that the current regulations permit psychologists to document the services they provide (psychotherapy, psychological/neuropsychological testing notes), but they should not be granted the authority to write medical progress notes due to the current Medicare regulations under § 482.12(c)(1)(vi).

Response: While we agree with the commenter regarding the intent of the current regulatory language, we believe that there is a need to clarify the intent of the language and ensure that the healthcare providers with the authority to document the progress reports are clearly identified. The majority of commenters supported the need for clarification due to the failure of the regulatory text to specify the non-physician practitioners who could document progress reports.

Additionally, we believe psychologists are appropriately included in the list of non-physician practitioners who have the authority to document in progress notes for patients receiving services in psychiatric hospitals. The regulation at § 482.12(c)(1)(vi), referenced by the commenter, states that a clinical psychologist, as defined in § 410.71, has the authority to admit patients and oversee the care of Medicare patients (but only with respect to clinical psychologist services as defined in § 410.71 of this chapter and only to the extent permitted by State law). Furthermore, non-physician practitioners currently document in the progress notes of patients in acute care hospitals to the extent of their scope of practice and hospital policy.

We believe that the revised language in this final rule will clarify our original intent in the proposed rule (as understood by readers as evidenced by the comments discussed here that request and support such clarification on this issue) that non-physician practitioners, including physician assistants, nurse practitioners, psychologists, and clinical nurse specialists, when acting in accordance with applicable State scope of practice laws, and hospital policies, should have the authority to record progress notes for all psychiatric and medical problems, which are present upon patient admission or which develop during hospitalization, for any psychiatric patient for whom these licensed practitioners are responsible as long as such patient problems fall within the bounds of a licensed practitioner's specific State scope of practice laws and hospital policies.

Comment: One commenter requested that clarification be provided regarding the use of the phrase ''hospital policy'' as it relates to the requirement that non-physician practitioners act in accordance with hospital policy.

Response: Psychiatric hospitals must comply with the hospital CoPs under 42 CFR part 482, which includes the requirements for psychiatric hospitals. The hospital CoPs require that the hospital's governing body approve all hospital policies, and in accordance with § 482.12(a)(4), the governing body must determine (in accordance with State law) which categories of practitioners are eligible candidates for appointment to the medical staff. The governing body is required to appoint members of the medical staff after considering the recommendations of the existing members of the medical staff and approve medical staff bylaws and other medical staff rules and regulations. Non-physician practitioners, whether employees or contractors, would be subject to all rules, regulations, and policy manuals utilized by the hospital.

Final Rule Action: We are finalizing the changes as proposed.

• *Contact:* Kianna Banks, 410–786–3498.

5. Transplant Centers

a. Special Requirement for Transplant Centers (§§ 482.68 and 482.70)

We proposed to update the terminology within the hospital regulation at part 482 and the transplant regulations at §§ 482.68, 482.70, 482.72 through 482.104, and at § 488.61, for clarification and consistency. Specifically, we proposed a nomenclature change which would:

• Replace the term transplant ''center'' in the regulation language with transplant ''program'' (each organ type would be a transplant program). A transplant program is located within a transplant hospital that provides transplantation services for a particular type of organ. Since individual transplant programs are surveyed for compliance with the CoPs, using the term transplant program throughout the regulation better aligns with current surveyor practice and will reduce provider confusion. In order to provide further clarity, we also proposed to update the definitions at § 482.70.

• Consistently use Independent Living Donor Advocate (ILDA) throughout the regulation.

• Change ''beneficiaries'' to ''recipients''.

Comment: All comments we received expressed support for the proposed nomenclature change, which would make the terminology used in the regulations consistent with the terminology used by the Organ Procurement and Transplantation Network (OPTN) and the transplant community.

Response: We thank the commenters for their support. We are finalizing this proposal without modification.

b. Data Submission, Clinical Experience, and Outcome Requirements for Re-Approval of Transplant Centers (§ 482.82)

We proposed to remove the requirements at § 482.82 that require transplant centers to submit data (including, but not limited to, submission of the appropriate OPTN forms for transplant candidate registration, transplant beneficiary registration and follow-up, and living donor registration and follow-up), clinical experience, and outcome requirements for Medicare re-approval, and make conforming changes to § 482.102(a)(5) ''Condition of participation, Patient and living donor rights'' and § 488.61 ''Special Procedures for Approval and Re-Approval of Organ Transplant Centers.''

Comment: Most commenters, including several major organizations which represent the interests of transplant surgeons and other professionals, transplant patients, individual transplant programs, members of the transplant community, and the OPTN, strongly supported the proposal to remove the provision that requires transplant centers that are applying for Medicare re-approval to meet all data submission, clinical experience, and outcome requirements in order to be re-approved. These commenters agreed with our analysis of the unintended consequences that have occurred because of the Medicare re-approval requirements and many agreed that eliminating this requirement would improve transplantation in the United States. Many of these commenters also stated their belief that the proposal would reduce administrative burdens. A

few commenters also supported maintaining the requirements for initial Medicare approval for transplant centers.

Several commenters, including members of the transplant community and interested individuals, objected to the removal of this proposal. These commenters as a whole were concerned that removing this proposal would affect quality of care and patient outcomes. Specifically, commenters were concerned as to whether information on transplant centers outcomes would continue to be available to the public, and whether CMS would still be able to identify underperforming transplant programs, in order to ensure patient safety and continued positive outcomes. Other commenters stated that, absent these requirements, CMS would rely upon transplant programs notifying CMS of changes rather than having a process in place that would monitor such changes. A few commenters expressed concerns regarding how CMS would identify underperforming transplant programs and requested guidance as to how CMS plans to ensure patient safety and positive outcomes by using the QAPI program instead of the current re-approval process. Others requested clarification as to how CMS would continue to monitor outcomes absent this requirement.

Response: We appreciate the commenters' support. CMS is committed to ensuring that our regulations support a patient's access to lifesaving organs. We also strive to protect the quality of care that the transplant recipient and donor receives while in the transplant facility and we agree with commenters that the removal of this requirement will work towards achieving these goals. We appreciate the numerous studies and professional opinions that were submitted by the public that further bolstered our understanding of the unintended consequences that have occurred as a result of the Medicare re-approval requirements for transplant centers and we therefore are finalizing our proposal to remove these requirements at § 482.82. We believe that the removal of these requirements will lead to improved patient outcomes, increased transplantation opportunities for patients on the waitlist, improved organ procurement for transplantation, greater organ utilization, and reduced burden on transplant programs. We note that the removal of these requirements directly aligns with our goal to increase access to kidney transplants by increasing the utilization of available organs from deceased donors and reducing the organ discard rate, which we outline in the Advancing American Kidney Health Paper, which can be found on the Office of the Assistant Secretary for Planning and Evaluation website at *https://aspe.hhs.gov/pdf-report/advancing-american-kidney-health.*

We understand the concerns that commenters raised regarding the availability of transplant program outcome data and we remind commenters that transplant outcomes will still be available to the public every six months on the Scientific Registry for Transplant Recipients (SRTR) website at *https://www.srtr.org/.* In addition, CMS will continue to survey the program's QAPI program to make sure the program is tracking adverse events, performing thorough analysis of each adverse event, and that performance improvement projects ensure adverse events do not recur. CMS will also do complaint investigations based on public or confidential reports about outcomes or adverse events.

It is our expectation that transplant programs will use their QAPI programs to continue to monitor quality of care, evaluate transplantation activities and outcomes, and conduct performance improvements when necessary. We believe that these efforts and the survey of the CoPs provides sufficient oversight to ensure that transplant programs will continue to achieve and maintain high standards of care.

Comment: A few commenters, who were generally supportive of the proposals, had additional clarifying questions for CMS about the survey process. One commenter asked whether additional reporting on the part of the hospital and transplant based QAPI programs would be required. A few commenters asked whether CMS would monitor hospital and QAPI based programs through a different mechanism, while one comment asked whether CMS will be providing published information regarding these reviews. One commenter also expressed their opposition to a change to the transplant QAPI regulations, and they expressed concern that changing these regulations will have unintended negative consequences on transplant survival outcomes, safety issues, and an increased focused on transplant volume by programs. Another commenter asked the following questions:

- Whether the monitoring schedule for CMS surveys of transplant programs will remain the same;
- What circumstances will trigger a review from CMS outside of routine recertification surveys; and
- What options will be available to a transplant program with condition level deficiencies on recertification surveys once the mitigating factors and SIAs are removed.

Response: We did not propose changes to the transplant program QAPI requirements and, consistent with other provider types, there is no public reporting for the hospital and transplant QAPI programs. Transplant programs must continue to abide by the hospital and transplant program QAPI CoPs at §§ 482.21 and 482.96, respectively. On survey, documentation of communication between these QAPI entities is expected and the hospital QAPI program should report to the Governing Body any issues with transplant outcomes.

In response to the questions about the survey process, we note that the survey interval will not change, and that public or confidential reports may trigger a complaint survey. Mitigating factors and systems improvement agreements were for outcomes non-compliance only and are therefore unnecessary with the removal of the outcomes re-approval requirement at § 482.82.

Comment: A few commenters were generally supportive of CMS's goals to improve organ transplantation by removing provider disincentives, but the commenters suggested that this could be achieved through improvements to the quality and outcomes measures. Specifically, the commenters suggested that reported outcomes focus on long term outcomes instead of short term outcomes, data on waitlist survival, donor utilization, total volume of organs transplanted, transplant rate utilization, cost-effectiveness, and other quality of care measures.

Response: We believe that the wide variety of data and studies presented in the proposed rule regarding the unintended consequences of the re-approval requirements sufficiently demonstrates that it is no longer appropriate to include specific outcome measures as a requirement for Medicare re-approval. Transplant programs, however, will still need to abide by these outcome measures for initial Medicare approval.

Comment: One commenter opposed the transplant center proposals and suggested that CMS look at Organ Procurement Organization (OPO) performance in producing quality organs.

Response: We thank the commenters for their feedback regarding OPO performance measures. However, we note that comments regarding OPOs are outside the scope of this final rule.

c. Special Procedures for Approval and Re-Approval of Organ Transplant Centers (§ 488.61(f) Through (h))

We proposed to remove the requirements at § 488.61(f) through (h) for mitigating factors and transplant systems improvement agreements for the re-approval process for transplant centers. This change is complementary to the proposed removal of § 482.82, described previously.

Comment: The majority of commenters were supportive of the proposal to remove the mitigating factors and systems improvement agreements requirement for the re-approval process for transplant centers. These commenters stated that the removal of this requirement will relieve undue burden on transplant programs. However, a few commenters opposed the removal of this provision. The commenters were concerned that the removal of this provision would negatively impact programs and they noted that programs that failed to meet the re-approval requirements would be terminated, which would limit patient access. The commenter suggested that, if this proposal is finalized, CMS should monitor the number of programs that have been decertified or that will face decertification based on conditions.

Response: The proposed change to remove the mitigating factors and systems improvement agreements afforded to transplant centers for Medicare re-approval is a complementary change to the removal of the Medicare re-approval requirements in § 482.82. We are finalizing the removal of § 482.82, making the existence of the mitigating factors and systems improvement agreement requirements obsolete. However, we note that transplant programs are still afforded the opportunity to submit mitigating factors or enter into systems improvement agreements for the initial Medicare approval, and that we are not making additional changes to the current processes other than the provisions regarding mitigating factors and systems improvement agreements.

Final Rule Action:

1. We are finalizing the proposal to make nomenclature changes throughout the transplant center regulations at §§ 482.68, 482.70, 482.72 through 482.104, and at § 488.61, without modification.

2. We are finalizing the proposal to remove § 482.82, without modification.

3. We are finalizing the proposal to remove the mitigating factor and systems improvement agreement requirements for Medicare re-approval at § 488.61(f) through (h), without modification.

Contact: Alpha-Banu Wilson, 410–786–8687.

6. Home Health Agencies

We received 27 timely public comments on our proposed changes to the HHA requirements. Commenters included industry associations, healthcare systems, individual HHAs, consumer advocacy organizations, and clinicians. Overall, the majority of commenters were supportive of the goal of the proposed changes. Those comments are discussed below.

a. Patient Rights (§ 484.50(a)(3) and (c)(7))

We proposed to delete the requirement at § 484.50(a)(3) that HHAs must provide verbal notification of all patient rights. We proposed to limit the verbal notification requirements to those requirements set out in section 1891(a)(1)(E) of the Act for which verbal notification is mandatory. We proposed to revise § 484.50(c)(7) to implement this more limited verbal notification requirement. Revised § 484.50(c)(7) would require HHAs to verbally discuss HHA payment and patient financial liability information with each HHA patient as described above.

Comment: The majority of comments submitted regarding this topic expressed support for the proposed change to require written notice of patient rights for all enumerated rights, and oral notice only for those rights specifically set forth in the Act as requiring such oral notice. However, a small number of comments did not support this change, stating that oral notice of all rights, rather than only those set forth in the Act, has value to patients and caregivers. One commenter stated that oral notice is particularly important for individuals with lower literacy levels due to disabilities.

Response: Consistent with the notice of patient rights requirements for other outpatient provider types, such as hospices, ambulatory surgery centers, and community mental health centers, for which written notice of patient rights is the only requirement, and in light of the support for this proposed change expressed by the majority of commenters, we are finalizing this change. We are sensitive to concerns related to those individuals with lower literacy levels due to disabilities that may impact understanding of the notice of patient rights. We remind all HHAs that, as part of their Medicare provider agreements, and in accordance with the other requirements of § 484.50, they are responsible for complying with the provisions of the Americans with Disabilities Act and Section 504 of the Rehabilitation Act when communicating with all patients regarding all subjects, including the notice of patient rights. HHAs must provide equal access to individuals with disabilities, including the provision of auxiliary aids and alternate formats, including, but not limited to, the provision of qualified interpreters, large print documents, Braille, digital versions of documents, and audio recordings.

b. Home Health Aide Services (§ 484.80(h)(3))

We proposed to eliminate the requirement at § 484.80(h)(3) that HHAs conduct a full competency evaluation of home health aides, and replace it with a requirement to retrain the aide regarding the identified deficient skill(s) and require the aide to complete a competency evaluation related only to those skills.

Comment: Comments overwhelmingly supported the proposed change to remove the requirement that a home health aide must complete a full competency evaluation whenever a skill deficiency is noted during the aide supervision process.

Response: We continue to believe that this change is appropriate, and are finalizing it as proposed.

c. Clinical Records (§ 484.110(e))

We proposed to remove the requirement at § 484.110(e) that the requested clinical record copy must be provided at the next home visit, while retaining the requirement that the information must be provided within 4 business days.

Comments: Comments universally supported the proposal to remove the requirement that HHAs must provide to patients a copy of information contained in the clinical record by the time of the next HHA visit. A few comments explicitly supported maintaining the requirement to provide the requested information to patients within 4 days. However, other comments stated that the proposed change did not provide enough burden relief, and suggested that the requirement to provide a copy of such information within 4 days should also be revised to allow HHAs up to 30 calendar days to provide such information. Commenters stated that 4 business days was insufficient time to access records, which may be archived offsite, make copies, and send those copies in the mail to arrive within 4 business days at the patient's home. One comment stated that the regulations should not include any requirements for HHAs to provide patients with

information from their own clinical records. Other commenters suggested that a shorter timeframe for providing information could be limited to only the information from the current 60 day episode of care, rather than to all certification periods from the episode of care or the patient's entire record of care that may cross several different episodes of care. Additionally, some commenters stated that HHAs should be permitted to charge patients a fee for providing information from the patient's own clinical record. However, other commenters specifically supported the prohibition on charging patients a fee to receive information from their own records.

Response: We appreciate the commenters' support for our proposed revisions, and for their suggestions for further changes regarding the HHA clinical records provisions. Addressing the evolving need for the electronic exchange of health information amongst health care providers and also between patients and their health care providers is an Administration priority. As such, we will consider the issues raised by commenters in the broader context of interoperability and health information exchange, and will use these comments to inform future rulemaking. We are not finalizing the changes to § 484.110(e) at this time.

d. Additional Comments

Summaries of the additional suggestions that we received that are not directly related to our proposals and our responses are set forth below.

Comment: Several commenters suggested that the requirement for HHAs to provide certain specified information, such as the upcoming HHA visit schedule and information about the treatments being furnished by HHA clinicians (§ 484.60(e)) in writing to patients, should be completely removed or significantly revised to remove most of the specified information from the list. Commenters specifically cited the requirement to provide patients with a visit schedule, contact information for a hospice clinical manager, and information about the treatments being provided as being overly burdensome requirements.

Response: While we understand the concerns expressed by commenters, we continue to believe that providing patient-centered, patient-directed care necessitates the provision of this crucial information to all patients. Patients cannot be active participants in their own care and advocates for their own interests without having essential information about when care will be provided to them, what treatments are being (or are supposed to be) administered during their care, and information for how to contact a clinical member of the HHA care team to discuss their questions and concerns. While it may be challenging for HHAs to keep patients abreast of their own care, such efforts form the basis of patient-centered care and cannot be ignored.

Comment: A commenter suggested that the CoP for the comprehensive assessment should be revised to permit a registered nurse or a therapist to perform the comprehensive assessment in all cases where both services are ordered. A few commenters suggested that HHAs should not be required to provide any clinical services by their own employees, per the requirements of § 484.105(f), and should instead be allowed to provide all clinical services under arrangement.

Response: Changes of this magnitude would mark a significant departure from longstanding CMS policy. As such, we believe that it would be most appropriate to use the traditional notice and comment rulemaking process to allow all interested parties the opportunity to comment on the concepts. We will take these suggestions under consideration for future rulemaking efforts.

Comment: Several commenters stated that nurse practitioners, in addition to physicians, should be allowed to write orders for the home health plan of care and provide care plan oversight.

Response: Section 1861(m) of the Act requires the HHA plan of care to be under the direction of a physician. Section 1861(r) of the Act defines ''physician'' in a manner that does not include other licensed practitioners, such as nurse practitioners and physician assistants. Therefore, pursuant to statute, other licensed practitioners may not establish and maintain the home health plan of care, including reviewing, signing, and ordering services on the home health plan of care.

Comment: A few commenters submitted comments related to physician signatures and communication with physicians regarding orders and the plan of care. Some comments stated that a physician signature should not be required for therapy orders. The commenters stated that requiring a physician signature on such orders delays the initiation of therapy services. Another comment stated that HHAs should not be required to communicate with all physicians who write orders for the plan of care when there is a change in the plan of care.

Response: In order to maintain appropriate oversight of the HHA plan of care, all HHA services, including therapy services, must be ordered by a physician (§ 484.60(b)(1)). The CoPs allow for verbal orders in order to facilitate a timely initiation of care, requiring that verbal orders be authenticated and dated by the physician in accordance with applicable state laws and regulations, and consistent with the HHA's own internal policies. Typically, a physician writes orders for a therapist to evaluate and treat the patient. The requirement for the physician order and subsequent signature in accordance with State law and HHA policy would not delay therapy services after the therapist's evaluation and recommended treatment plan has been communicated to the physician for approval. It is not necessary to withhold therapy services while waiting for the physician confirmation of the therapy plan.

We agree with the commenter that communicating with all involved physician(s) is not necessary for every single change in the plan of care. Section 484.60(c)(3) requires such communication only when the change to the plan of care is due to a change in the patient's health status (for example, initiating a new medication) or a change in the plan for the patient's discharge from the HHA. The communication of other changes that do not fall into one of these categories (for example, adjusting the dose of a current medication) is left to the discretion of HHA clinical staff and the clinical manager(s) responsible for the patient's care.

Comment: Numerous commenters submitted suggestions for changes to HHA payment policies, such as the face to face requirement and the homebound requirement, which they believe should be addressed as part of CMS burden reduction efforts. A single commenter suggested a revision to the Home Health Consumer Assessment of Healthcare Providers and Systems (HHCAHPS). A small number of commenters submitted comments regarding information in the HHA interpretive guidelines.

Response: Comments not related to the HHA CoPs are outside of the scope of this rule. Individuals wishing to submit comments regarding CMS payment policies may submit those comments as part of the annual HHA payment policy proposed rule. We have shared these unrelated comments with the appropriate components within CMS.

Final Rule Action:

1. We are finalizing the proposal to delete the requirement at § 484.50(a)(3)

that HHAs must provide verbal notification of all patient rights.

2. We are finalizing the proposal to revise § 484.50(c)(7), requiring HHAs to verbally discuss HHA payment and patient financial liability information with each HHA patient.

3. We are finalizing the proposal to eliminate the requirement at § 484.80(h)(3) to conduct a full competency evaluation, and replace it with a requirement to retrain the aide regarding the identified deficient skill(s), and require the aide to complete a competency evaluation related only to those skills.

4. We are not finalizing the proposal to remove the requirement at § 484.110(e) that the requested clinical record copy must be provided at the next home visit.

Contact: Danielle Shearer, 410–786–6617.

7. Comprehensive Outpatient Rehabilitation Facilities (CORFs)—Utilization Review Plan (§ 485.66)

We proposed to amend the utilization review plan requirements at § 485.66 to reduce the frequency of utilization reviews from a quarterly basis to an annual requirement.

We received two timely public comments on our proposed changes to the CORF requirements. Both comments expressed strong support for the proposed changes; therefore we are finalizing those changes as proposed in this final rule.

1. *Final Rule Action:* We are finalizing the proposal to revise § 485.66, requiring the facility to have a written utilization review plan that is implemented annually, without modification.

Contact: CAPT Jacqueline Leach, USPHS, 410–786–4282.

8. Critical Access Hospitals

a. Organizational Structure (§ 485.627(b)(1))

We proposed to remove the requirement for CAHs to disclose the names and addresses of their owners, those with a controlling interest in the CAH or in any subcontractor in which the CAH directly or indirectly has a 5 percent or more ownership interest, in accordance with 42 CFR part 420, subpart C. This requirement is duplicative, as it is also a requirement for the provider agreement for Medicare participation. This proposal was also included in the *Medicare and Medicaid Programs; Hospital and Critical Access Hospital (CAH) Changes To Promote Innovation, Flexibility, and Improvement in Patient Care; Proposed Rule* (81 FR 39447) for the same reason.

Comment: Commenters universally supported the proposal to remove the CAH disclosure requirement, noting that the requirement duplicates a provision found elsewhere in our regulations. Comments received regarding this provision in the *Medicare and Medicaid Programs; Hospital and Critical Access Hospital (CAH) Changes To Promote Innovation, Flexibility, and Improvement in Patient Care; Proposed Rule* (81 FR 39447, 39460, June 16, 2016) were consistent with those received for this proposed rule, with commenters also universally supporting the proposal.

Response: We appreciate the comments received and continue to believe that this change is appropriate.

Final Rule Action: We are finalizing the proposed changes without modification.

Contact: Kianna Banks, 410–786–3498.

b. Provision of Services (§ 485.635(a)(4))

Current regulations at § 485.635 require a CAH's professional healthcare staff to review policies and procedures annually; the review group must include one or more doctors of medicine or osteopathy and one or more physician assistants, nurse practitioners, or clinical nurse specialists. Based on our experience with other providers, we proposed a flexible approach that would allow CAHs to maintain their health and safety policies in such a manner as to achieve the intended outcomes for all patients. Thus, we proposed to change the requirement at § 485.635(a)(4) from ''annual'' to ''biennial''.

We received 20 public comments on our proposed changes to this CAH requirement. Commenters included hospital industry associations, individual providers, and national accrediting organizations. Overall the commenters were supportive of the proposed changes.

Summaries of the comments and our responses are set forth below.

Comment: All of the commenters agreed with the effort to reduce burden. However, a few of commenters suggested moving to a 3-year timeframe for reviews and several other commenters suggested aligning with hospital requirements and removing the timeframe and allow CAHs to determine when reviews are done.

Response: CAHs are rural providers with separate Conditions of Participation from hospitals and they do not have the range or number of personnel, among other requirements we require for hospitals.

We believe that the approach of requiring a biennial review reduces burden while maintaining the appropriate safeguards for healthy outcomes for CAH patients. Therefore, we are finalizing this requirement without modification.

Final Rule Action: We are finalizing the proposed changes to § 485.635(a)(4).

Contact: Mary Collins, 410–786–3189.

c. Special Requirements for CAH Providers of Long-Term Care Services (''Swing-Beds'') (§ 485.645(d)(1), (4), (5) and (8))

The special requirements for CAH swing-bed providers are nearly identical to the requirements for hospital providers of swing-bed services. As a result, please refer to the discussion on the special requirements for hospital providers of swing-bed services under section II.D.3 for the details of the proposed changes for these requirements for both hospitals and CAHs. We proposed the following revisions to the CAH swing-bed requirements:

- Revision of § 485.645(d)(1) to remove the cross-referenced long-term care requirement in § 483.10(f)(9), which requires that CAH swing-bed providers to offer residents the right to choose to or refuse to perform services for the facility and prohibits a facility from requiring a resident to perform services for the facility;
- Removal of § 485.645(d)(4), which requires CAH swing-bed providers to provide an ongoing activity program that is directed by a qualified therapeutic recreation specialist or an activities professional who meets certain requirements (cross-referenced long-term care requirement § 483.24(c));
- Revision of § 485.645(d)(4) (as redesignated) to remove the cross-referenced long-term care requirement § 483.70(p), which requires that CAH swing-bed providers with more than 120 beds to employ a qualified social worker on a full-time basis; and
- Revision of § 485.645(d)(7) (as redesignated) to remove the cross-referenced long-term care requirement § 483.55(a)(1), which requires CAH swing-bed providers to assist in obtaining routine and 24-hour emergency dental care to its residents.

Contact: Kianna Banks, 410–786–3498.

9. Community Mental Health Centers (§ 485.914(d))

We require CMHCs, at § 485.914(d)(1), to update clients' comprehensive assessments every 30 days. We proposed to revise § 485.914(d)(1) to require that the CMHC update each client's comprehensive assessment via the CMHC interdisciplinary treatment

team, in consultation with the client's primary health care provider (if any), when changes in the client's status, responses to treatment, or goal achievement have occurred, and in accordance with current standards of practice. Additionally, at § 485.914(d)(2), we proposed to retain the minimum 30-day assessment update time frame for those clients who receive PHP services. We believe this proposed change will allow for the provider and client to choose a visit schedule that is appropriate for the client's condition and not cause extra work or time for documentation that is unnecessary. Ultimately, this proposed change may allow for greater flexibility for the provider and client, saving time for both.

We received 4 timely public comments on our proposed changes to the requirements at § 485.914(d). Commenters included physicians, associations and health networks. Overall, the majority of commenters were supportive of the goal of the proposed changes. Summaries of the major issues and our responses are set forth below.

All of the comments expressed strong support for the proposed changes to § 485.914(d); therefore, we are incorporating those changes as proposed in this final rule.

Comment: We received several comments in support of the proposed change to the CMHC update to the comprehensive assessment requirement. Most commenters agreed that, for patients admitted for non-PHP services, it made sense to allow patients care needs, responses to treatment and care goals to drive decisions about when a patient needs to have an updated assessment. Commenters also agreed that it was appropriate to keep the requirement to update to the comprehensive assessment every 30 days for PHP patients. One commenter raised a concern regarding the proposed update to the comprehensive assessment requirement changes as it relates to patients needing to transfer to the hospital emergency department. The commenter stated that some emergency departments receive patients directly from CMHCs for emergency mental health treatment, and that it is important for the treating physician in the ED to know what medications the patient is taking. A commenter agreed with the proposed change to the comprehensive assessment update requirement, and asked for CMS to consider making similar burden reducing changes to all the requirements for the ''Persons centered active treatment plan'' under § 485.916.

Response: We appreciate all of the positive feedback on the proposed changes to remove the 30-day updated assessment timeframe for non-PHP patients, and are finalizing this proposal without change. We understand the concerns raised related to how this assessment change would impact CMHC patients who must be transferred to a hospital emergency room. In the CMHC CoPs under § 485.914(e)(5)(v)(A)–(E), we state that when a client becomes an immediate threat to the physical safety of themselves, staff or other individuals, the CMHC must document a description of the client's behavior and the intervention(s) used (including medications), alternatives or other less restrictive interventions attempted, the client's condition or symptom(s) that warranted the use of the restraint or seclusion, and the client's response to the intervention(s) used. Typically, patient transfers from a CMHC to an emergency room include a transfer note summarizing the above information, including all current medications and any PRN medications that were given prior to the transfer to the emergency room. Furthermore, we agree with the suggestion that conforming changes should be made to § 485.916, because the requirements of § 485.914 and 485.916 constitute a cycle of care, with assessment and care planning feeding into one another. However, because we did not propose any changes to the client centered active treatment plan CoP (§ 485.916), we are legally not permitted to make any changes in a final rule without proposing the change to the public in a proposed rule. Therefore we will not be amending the regulatory language in § 485.916 but will consider proposing a change to the requirements at a future date.

Final Rule Action: We are finalizing the proposal to revise § 485.914(d) that the CMHC must update each client's comprehensive assessment via the CMHC interdisciplinary treatment team, in consultation with the client's primary health care provider (if any), when changes in the client's status, responses to treatment, or goal achievement have occurred and in accordance with current standards of practice. For clients that receive PHP services, the assessment must be updated no less frequently than every 30 days.

Contact: CAPT Mary Rossi-Coajou, USPHS, 410–786–6051.

10. Portable X-Ray Services (§§ 486.104(a) and 486.106(a))

We proposed to revise the personnel qualification requirements at § 486.104(a)(1), (2), (3), or (4) by removing school accreditation requirements and simplifying the structure of the requirements. We proposed that all operators of portable X-ray equipment would meet one of the following:

(1) Successful completion of a program of formal training in X-ray technology at which the operator received appropriate training and demonstrated competence in the use of equipment and administration of portable x-ray procedures; or

(2) Successful completion of 24 full months of training and experience under the direct supervision of a physician who is certified in radiology or who possesses qualifications which are equivalent to those required for such certification.

We proposed to update § 486.106(a)(2) (specific to portable x-ray services) to cross reference the requirements at § 410.32 instead of setting forth specific order requirements. We proposed to retain the requirement that the portable x-ray order must include a statement on why it is necessary to perform a portable x-ray as opposed to performing the study in a facility where x-rays are more typically performed.

We received 9 timely public comments on our proposed changes to the portable x-ray requirements. Commenters included long-term care facility associations, portable x-ray associations, portable x-ray suppliers, and health care systems. Overall, the majority of commenters were supportive of the goal of the proposed changes. Summaries of the major issues and our responses are set forth below.

Comment: All of the comments received regarding our proposal to revise the personnel requirements for individuals who perform portable x-ray services supported the proposed revision. A single commenter suggested that option 2, related to 24 full months of training and experience under the direct supervision of a physician, and should not be included because these training programs are no longer offered.

Response: We agree with the comments that it is appropriate to revise the personnel requirements for individuals who perform portable x-ray services in a manner that focuses on the skills of the individual rather than the accreditation of the institution that provided the training, and we are finalizing this change. We do not agree that it is appropriate to eliminate the qualification option related to 24 full months of training and experience under the direct supervision of a physician. The fact that such programs are no longer offered does not mean that those individuals who completed such programs are no longer qualified to

perform portable x-ray services, and thus excluded from performing their job duties. Excluding those individuals would not benefit patient health and safety or patient access to portable x-ray services; and may, in fact, reduce the number of qualified portable x-ray technicians and negatively impact access to care.

Comment: All of the comments received regarding our proposal to revise the requirements for portable x-ray orders supported the proposed revision. One commenter specifically supported, while another specifically disagreed with, the proposal to retain the requirement that each order must specify the reason that portable x-ray services are necessary.

Response: We agree with the comments that it is necessary and appropriate to revise the requirements for portable x-ray orders to align with the separate payment requirements for diagnostic imaging orders that also apply to portable x-ray services at § 410.32, and are finalizing this change. We believe that it is appropriate to require documentation regarding why this unique service is necessary in place of the more traditional facility-based x-ray service, and are continuing this longstanding element as part of the revised requirements for portable x-ray orders.

Comment: We received several comments related to Medicare payment policies and Medicare payment manuals related to portable x-ray services. We also received a comment related to the 2018 Crosswalk for Medicare Provider/Supplier to Healthcare Provider Taxonomy, and the Medicare provider and supplier enrollment process.

Response: These comments are outside of the scope of this rule, and have been shared with the CMS components that are responsible for these subject matter areas.

Final Rule Action: We are finalizing the changes to §§ 486.104(a) and 486.106(a)(2).

Contact: Sonia Swancy, 410–786–8445.

11. Rural Health Clinics (RHCs) and Federally Qualified Health Centers (FQHCs)

a. Provision of Services (§ 491.9(b)(4))

We proposed to change the requirement at § 491.9(b)(4), related to reviewing patient care policies, from an ''annual'' review to a ''biennial'' review.

b. Program Evaluation (§ 491.11(a))

We proposed to revise the current requirement at § 491.11(a) by changing the frequency of the RHC or FQHC evaluation from annually to every other year.

We received 30 timely public comments on our proposed changes to the RHC and FQHC requirements. Commenters included industry associations, healthcare systems, individual RHCs and FQHCs and clinicians. Overall, the majority of commenters were supportive of the goal of the proposed changes. Summaries of the major issues and our responses are set forth below.

Comment: Overall, the majority of comments submitted regarding this topic expressed support for both of the proposed changes to require biennial provision of services policy reviews and clinic or center total program evaluation. Some of the commenters were completely supportive of the proposed biennial change, while some of the commenters stated they were unsure whether it will provide meaningful burden reduction. Other commenters were appreciative of the CMS goal to reduce burden on the RHC or FQHC and stated that the flexibility and opportunity to allow the clinic or center to decide how to most appropriately use their staff time and resources is critical to maintaining the highest standard of care for their patients. One commenter suggested that, in addition to revising the time frame for review, CMS should also reduce the burden of this regulation by removing the requirement that someone in the group of professional personnel that reviews the policies must be from outside the clinic or center's staff.

Response: We continue to believe these two changes are appropriate, and are finalizing them as proposed.

We agree that the requirement to have someone in the group of professional personnel that reviews the policies be from outside of the clinic or center's own staff can be difficult to meet in medically underserved areas or those where there are health professional shortages. Administrative burden would be decreased by the time often spent trying to find a qualified professional who is not on payroll, but is willing to come in and review RHC policies. We will consider this change for future rulemaking.

Final Rule Action:

1. We are finalizing the proposal to revise the requirement at § 491.9(b)(4) requiring RHCs and FQHCs to review their patient care policies at least biennially by a group of professional personnel and RHC or FQHC staff.

2. We are finalizing the proposal to revise the requirement at § 491.11(a) that requires the clinic or center to carry out or arrange for, a biennial evaluation of its total program.

Contact: CAPT Jacqueline Leach, USPHS, 410–786–4282.

12. Emergency Preparedness for Providers and Suppliers

On September 16, 2016, we published a final rule entitled, ''Medicare and Medicaid Programs; Emergency Preparedness Requirements for Medicare and Medicaid Participating Providers and Suppliers'' (81 FR 63860), which established national emergency preparedness requirements for Medicare and Medicaid participating providers and suppliers (referred to collectively as ''facilities'' in the subsequent section) to plan adequately for both natural and man-made disasters and coordinate with Federal, State, tribal, regional, and local emergency preparedness systems. In that final rule, we emphasized the need for facilities to maintain access to healthcare services during emergencies, safeguard human resources, and maintain business continuity and protect physical resources. A facility's emergency preparedness program must include the following elements:

- Risk assessment and emergency planning
- Policies and procedures
- Communication plan
- Training and testing

We received over 300 comments centered around the proposed revisions to the Emergency preparedness requirements. Some of the comments were supportive of one or more of the proposed provisions, others were not supportive of the proposed revisions and expressed the commenters concerns. We have organized our responses to the comments as follows: (1) General Comments; (2) Annual Review of Emergency Preparedness Program; (3) Documentation of Cooperation Efforts; (4) Annual Emergency Preparedness Training Program; (5) Annual Emergency Preparedness Testing.

General Comments

Comment: One commenter suggested that we delay any changes to emergency preparedness for 5 years. The commenter states that revisions set forth in the September 2016 Emergency Preparedness final rule (81 FR 63860) just went into effect within the past year and some facilities are still working to come into compliance with those changes. Commenters assert that implementing additional revisions at this time would be burdensome.

Response: The September 2016 Emergency Preparedness final rule (81

FR 63860) was a comprehensive change in our requirements for all provider types. Therefore, we allowed additional time for providers and suppliers to come into compliance. We do not agree that it is necessary to extend the effective date because (1) the original compliance date was 2017, so providers and suppliers should be complete with implementation; (2) the proposed changes in this rule decrease burden, so implementation should not impose a hardship on providers and suppliers to come into compliance. Therefore, we are not delaying the implementation of this requirement. Once this rule is published, providers/suppliers will have 60 days from the publication date to be in compliance with the finalized changes.

Comment: One commenter requested that we leave the emergency preparedness regulations as they are and work instead on strengthening standards as proposed in *Sheltering in Danger,* a report written by Minority Staff of the Senate Finance Committee. The report discusses efforts to improve nursing home quality by calling attention to specific issues such as heat index/temperature/humidity, sheltering and evacuations and community engagement.

Response: We appreciate the Committee's work on the *Sheltering in Danger* report. We updated Appendix Z of the State Operations Manual in February 2019 to clarify the emergency preparedness requirements. This includes adding emerging infectious diseases to the definition of all-hazards approach; clarifications and additional guidance on the use of portable generators and alternate source power and a cross reference to the nursing home requirements for safe temperatures; and technical changes to the home health citations. We are always looking for ways to improve quality and safety oversight efforts in nursing homes, and are continuing to consider the report's recommendations as we move forward.

Comment: A few commenters stated that the current emergency preparedness requirements are overly burdensome for outpatient providers/suppliers and the requirements should be different for outpatient versus inpatient providers and suppliers. The commenters expressed that providers/suppliers that provide inpatient services should have stronger requirements as the patients or residents may be incapable of self-preservation in the event of an emergency. Whereas, outpatient providers and suppliers generally have patients that are capable of self-preservation in the event of an emergency.

Response: We understand that for many smaller, rural providers and suppliers and for outpatient facilities that do not have full-time patients the emergency preparedness requirements may seem excessive. Many of the requirements are similar for inpatient and outpatient providers and suppliers. We believe these emergency preparedness requirements are important for all providers and suppliers. However, we recognize that there are some differences in inpatient and outpatient facilities with regard to emergency preparedness and have made changes in this rule that recognize these differences. In addition, we note that LTC facilities have some changes in requirements for the emergency plan updates and training that are discussed in detail below. We will take your recommendation and consider it for future rulemaking.

a. Annual Review of Emergency Preparedness Program (§§ 403.748, 416.54, 418.113, 441.184, 460.84, 482.15, 483.73, 483.475, 484.102, 485.68, 485.625, 485.727, 485.920, 486.360, 491.12, and 494.62 (a), (b), (c), and (d))

We proposed to change the requirement for facilities to review their emergency preparedness program at least every 2 years. This would increase the facility's flexibility to review their programs as they determine best fits their needs. We are finalizing this proposal with modifications to LTC facilities only.

The comments received in response to the proposed revision were mostly supportive and the comments that were not supportive were mostly centered around LTC facilities. Below is a summary of the comments we received and our responses.

Comment: Many commenters supported the emergency preparedness updates for biennially revisions to the emergency plan. One commenter stated that annual revisions are not always necessary, as urgent changes are made as needed; otherwise, facilities are reviewing procedures that have not changed. The proposed revisions to emergency preparedness requirements would increase facilities' flexibility to build, train, test and review an effective program that meets the needs of each facility and community in which the facility is located.

Response: We agree that requiring facilities to review their emergency preparedness plan biennially allows for more flexibility for providers and suppliers. We expect that facilities would routinely revise and update their policies and operational procedures to ensure that they are operating based on best practices. In addition, facilities should update their emergency preparedness program more frequently than every 2 years as needed (for example, if staff changes occur or lessons-learned are acquired from a real-life event or exercise). Therefore, we are finalizing this proposal for all providers/suppliers to update their emergency preparedness plan biennially. As discussed in greater detail below, due to the vulnerability of residents in LTC facilities, we are not finalizing the proposal for those facilities only and will require them to update their emergency plan annually, as is currently required. This will allow the staff and residents to be fully aware of the emergency preparedness program and any changes made.

Comment: As noted above, we received many comments that asked us to not finalize the proposed emergency preparedness requirements for LTC facilities. One commenter stated that ongoing communication and collaboration are very important. The current regulations sensibly require annual updates to emergency plans, policies and procedures, communications plan, training and testing. The success of a preparedness plan often depends on frequent updates. Significant changes can occur in a 2 year period, the resident population, as well as local health care providers, transportation companies, staff, facilities, patient population and other vendors. The LTC facility should know about changes in their community. Staff turnover is a concern and for that reason emergency preparedness plans need to be revisited yearly to be sure everyone is prepared. Many commenters stated that changing the requirements to biennial updates creates additional opportunities for errors and for facility residents and staff to be unprepared, lack appropriate response and endanger more residents' lives. Residents depend heavily on the staff and rely on their preparedness during an emergency. The effort and expense of annual updating is far outweighed by the benefit of a LTC facility being prepared for an emergency. Moving to biennial review could exacerbate the issue of emergency preparedness in LTC facilities more than already exists.

Response: We recognize that LTC facility residents are generally a very vulnerable population that rely on the staff to be knowledgeable and prepared in the event of an emergency. For that reason, we are not finalizing the proposal for biennial updates to the

emergency plan for LTC facilities only. All other providers and suppliers will be required to update their emergency preparedness plan biennially. We would like to point out that this is the minimum requirement for non-LTC facility providers and suppliers and that non-LTC facility providers and suppliers are encouraged to review and update their facilities plan more frequently if providers and suppliers feel the need to.

b. Documentation of Cooperation Efforts (§§ 403.748(a)(4), 416.54(a)(4), 418.113(a)(4), 441.184(a)(4), 460.84(a)(4), 482.15(a)(4), 483.73(a)(4), 483.475(a)(4), 484.102(a)(4), 485.68(a)(4), 485.625(a)(4), 485.920(a)(4), 486.360(a)(4), 491.12(a)(4), and 494.62(a)(4))

We proposed to eliminate the requirement that facilities document efforts to contact local, tribal, regional, State, and Federal emergency preparedness officials and facilities' participation in collaborative and cooperative planning efforts. Facilities will still be required to include a process for cooperation and collaboration with local, tribal, regional, State and Federal emergency preparedness officials' efforts to maintain an integrated response during a disaster or emergency situation.

The comments received regarding this proposal were mostly supportive. Below we have summarized the comments received and our responses.

Comment: Many commenters support the elimination of documentation of efforts to contact local, tribal, regional, State and Federal emergency preparedness officials and, when applicable, document the facility's participation in collaborative and cooperative planning efforts. Commenters state that documenting efforts to contact emergency preparedness officials are overly burdensome. The commenters also stated that eliminating this requirement allows for smaller facilities to focus on patient care.

Response: We agree that the documentation requirement can be overly burdensome, as some comments have raised, and are finalizing the proposal to remove the requirement. We believe that eliminating this documentation requirement would reduce burden by not requiring facilities to demonstrate that they have contacted local, tribal, regional, State, and Federal emergency preparedness officials or participated in collaborative and cooperative planning in the community, while still requiring facilities to have a process for cooperation and collaboration. Therefore, we are finalizing this requirement as proposed and eliminating the documentation requirement for collaboration with emergency preparedness officials. Providers and suppliers would still be required to have a process for cooperation and collaboration as part of the emergency plan.

Comment: Commenters stated that removing documentation requirements will reduce transparency of cooperation efforts, increasing the likelihood of disjointed responses and weakening accountability. Documentation proves that the facility has actually contacted and collaborated with EP officials, is the only way a state survey agency can verify that efforts have been made for compliance, and is invaluable to incoming staff.

Response: We would like to point out that providers would still be required at the respective emergency preparedness requirements for each provider and supplier to include a process for collaboration/cooperation with officials; however, they would not be required to document efforts to contact these officials. Therefore, this maintains the existence of a process for collaboration with officials without posing additional documentation burdens. Therefore, we are finalizing this requirement as proposed and eliminating the documentation requirement for collaboration with emergency preparedness officials.

c. Annual Emergency Preparedness Training Program (§§ 403.748(d)(1)(ii), 416.54(d)(1)(ii), 418.113(d)(1)(ii), 441.184(d)(1)(ii), 460.84(d)(1)(ii), 482.15(d)(1)(ii), 483.73(d)(1)(ii), 483.475(d)(1)(ii), 484.102(d)(1)(ii), 485.68(d)(1)(ii), 485.625(d)(1)(ii), 485.727(d)(1)(ii), 485.920(d)(1)(ii), 486.360(d)(1)(ii), 491.12(d)(1)(ii), and 494.62(d)(1)(ii))

Facilities are required to develop and maintain a training program that is based on the facility's emergency plan. This emergency preparedness training must be provided at least annually and a well-organized effective training program must include initial training in emergency preparedness policies and procedures. We revisited the public comments received on the Emergency Preparedness proposed rule (81 FR 63890 through 63891) and determined that requiring facilities to provide annual training may be unduly burdensome. Therefore, we proposed to require facilities to provide training biennially or every 2 years, after facilities conduct initial training on their emergency program. In addition, we proposed to require additional training when the emergency plan is significantly updated.

Overall, the majority of commenters opposed our proposal to require emergency preparedness training biennially. We received a significant number of comments on this proposal from nursing home resident advocates. We received a few supportive and negative comments from other stakeholders, including Congressional representatives and emergency management professionals. A summary of the major issues and our responses are set forth below:

Comment: Nursing home resident advocates overwhelmingly opposed our proposal to require emergency preparedness training biennially. These commenters noted that training every 2 years is not sufficient to maintain readiness in the event of an emergency. Commenters noted that nursing homes specifically experience high staff turnover, changes in ownership, and changes in resident conditions/needs, and cited these conditions as reasons to support annual training. Commenters also noted recent emergency events and the lack of readiness displayed by nursing homes as an indication that more emergency preparedness training, not less, is needed.

In addition to the large number of comments from nursing home resident advocates, we also received a few comments opposed to the proposal from non-LTC facility providers. These commenters also noted high staff turnover, changes in community resources, closure of receiving providers, changes in patient/resident census, and the need to incorporate recent best practices and lessons learned as the main reasons to support annual training. Commenters indicated that the effort and expense of annual training would be outweighed by the benefit of being prepared in the case of an emergency or natural disaster.

Response: We appreciate the feedback and thoughtful comments provided on this proposal. We especially appreciate the comments that provided a very detailed analysis of the lack of emergency response in nursing homes following recent emergency events. We believe that these comments have provided compelling evidence to revise our proposal specific to LTC facilities. Therefore, for LTC facilities only, we are not finalizing our proposal to revise the annual training requirement to biennial training. LTC facilities will be required to continue to meet the current requirement for annual training.

d. Annual Emergency Preparedness Testing (§§ 403.748(d)(2), 416.54(d)(2), 418.113(d)(2), 441.184(d)(2), 460.84(d)(2), 482.15(d)(2), 483.73(d)(2), 483.475(d)(2), 484.102(d)(2), 485.68(d)(2), 485.625(d)(2), 485.727(d)(2), 485.920(d)(2), 486.360(d)(2), 491.12(d)(2), and 494.62(d)(2))

Facilities are currently required to conduct exercises to test the emergency plan at least annually. The facility must conduct two emergency preparedness testing exercises every year. Specifically, facilities must:

- Participate in a full-scale exercise that is community-based or when a community-based exercise is not accessible, an individual, facility-based. If the facility experiences an actual natural or-man made emergency that requires activation of the emergency plan (including their communication plan and revision of the plan as needed), the facility is exempt from engaging in a community-based or individual, facility based full-scale exercise for 1 year following the onset of the actual event;
- Conduct an additional exercise that may include either a second full-scale exercise that is community-based or individual, facility-based or a tabletop exercise that includes a group discussion led by a facilitator.

Upon further analysis of this requirement, and taking into account stakeholder feedback, we determined that there was a need to clarify and revise some of the requirements included in the Emergency Preparedness final rule (81 FR 63860). Therefore, for all provider and supplier types, we proposed to clarify our intent with regard to the types of testing exercises, specifically full-scale exercises and functional exercises.

For providers of inpatient services (inpatient hospice facilities, Psychiatric Residential Treatment Facilities (PRTFs), hospitals, long-term care facilities (LTCFs), ICFs/IIDs, and CAHs), we proposed to retain the existing requirement for these provider and supplier types to conduct two emergency preparedness testing exercises annually. We proposed to expand the testing requirement options, such that one of the two annually required testing exercises could be an exercise of their choice, which could include one community-based full-scale exercise (if available), an individual facility-based functional exercise, a drill, or a tabletop exercise or workshop that included a group discussion led by a facilitator. We noted that although RNHCIs provide inpatient services, we determined that changing their existing requirements to make them consistent with this proposed provision would be unduly burdensome, as they are currently only required to conduct a paper-based, tabletop exercise at least annually.

For providers of outpatient services (ASCs, freestanding/home-based hospice, Program for the All-Inclusive Care for the Elderly (PACE), HHAs, CORFs, Organizations (which include Clinics, Rehabilitation Agencies, and Public Health Agencies as Providers of Outpatient Physical Therapy and Speech-Language Pathology Services), CMHCs, Organ Procurement Organizations (OPOs), RHCs, FQHCs, and ESRD facilities), we proposed to require that providers of outpatient services conduct only one testing exercise per year. Furthermore, we proposed to require that these providers participate in either a community-based full-scale exercise (if available) or conduct an individual facility-based functional exercise every other year. In the opposite years, we proposed to allow these providers to conduct the testing exercise of their choice, which may include either a community-based full-scale exercise (if available), an individual, facility-based functional exercise, a drill, or a tabletop exercise or workshop that includes a group discussion led by a facilitator. We noted that due to the nature of services provided by OPOs, we proposed to require that they have the option of providing either a tabletop exercise or workshop every year.

Lastly, we proposed to clarify the testing requirement exemption by noting that if a provider experiences an actual natural or man-made emergency that requires activation of their emergency plan, inpatient and outpatient providers will be exempt from their next required full-scale community-based exercise or individual, facility-based functional exercise following the onset of the actual event.

The majority of the comments received were supportive of our proposal to differentiate the emergency preparedness testing requirements between inpatient and outpatient providers and to clarify the types of testing exercises that will satisfy the proposal. A summary of the major comments and our responses are below:

Comment: While many commenters supported our requirement to differentiate the emergency preparedness testing requirements between inpatient and outpatient providers, one commenter noted that the varying requirements may discourage coordination and collaboration amongst providers within a community.

Response: We appreciate the feedback in support of our proposal. It is not our intention to discourage coordination among providers, but rather to provide facilities with a requirement for emergency preparedness testing that is realistic and attainable, without impacting the health and safety of the patients that they serve. We believe that differentiating the testing requirements by inpatient and outpatient provider and supplier types takes into consideration the unique characteristics of not only the provider type, but also the population that they serve. We expect that facilities will continue to make best efforts to collaborate with providers within their community to not only maximize efforts and resources, but to also meet the many other emergency preparedness requirements for coordination and collaboration. We note that all provider and supplier types are required to develop an emergency preparedness communication plan that, among other things, includes information for other providers; and to develop a method for sharing information and medical documentation for individuals under the provider's care with other health care providers, as necessary to maintain the continuity of care.

Comment: Commenters supported the clarification of the types of testing exercises that would satisfy the testing requirements. However some commenters indicated that the proposal, and terminology we used, remain confusing. These commenters urged us to follow the principles of exercise programs established under the Homeland Security Exercise and Evaluation Program (HSEEP). One commenter indicated that we use functional exercise and full-scale exercise interchangeably, when the two exercises are vastly different types of exercises. This commenter suggested further that we use a more broad definition of the types of testing exercises to align with HSEEP. Specifically, the commenter recommended that we require facilities to participate in an annual operations-based exercise in conjunction with local, county, or other state stakeholders (if available) or conduct an operations-based exercise at the facility level. The commenter noted that, as defined by HSEEP, an ''operations-based exercise'' could include any of the following types of exercises: Drill, functional exercise, or full-scale exercise. Furthermore, the commenter indicated that as a choice of testing exercises we should specify that

facilities may choose a ''discussion based exercise'' that, as defined by HSEEP, would include a tabletop exercise or workshop.

Response: We appreciate the feedback and want to ensure that the language used in our regulations and the intent behind our regulations are as clear as possible. As indicated in the proposed rule and as well in the 2016 Emergency Preparedness final rule (81 FR 63860), we have attempted to align our terminology with that used by HSEEP. We note that functional exercise and full-scale exercise are specific testing exercise types as defined by HSEEP. Furthermore, in the proposed rule (83 FR 47714) we provided definitions for both functional and full-scale exercises, as defined by HSEEP. Therefore, we disagree with the commenters who suggested that we have not aligned our proposal with the guiding principles of HSEEP.

It is our intent that providers and suppliers make an attempt to conduct a full-scale exercise within their community, while understanding that this may not always be feasible. Therefore, we provide that when a full-scale exercise is not available, facilities must conduct a functional exercise at the individual facility level in order to satisfy our requirement. The commenter's suggestion to broaden the language to ''operations-based exercise'' would mean that a drill could also satisfy our requirement, and that is not our intention. We specifically refer to a full-scale exercise and functional exercise because those are the two testing exercises that would satisfy the requirement. We encourage readers to refer to the proposed rule (83 FR 47714) and the HSEEP guidelines located at *https://preptoolkit.fema.gov/documents/1269813/1269861/HSEEP_Revision_Apr13_Final.pdf/65bc7843-1d10-47b7-bc0d-45118a4d21da* for additional details regarding the definition of these types of exercises.

While we have not made any modifications to the terminology used to highlight the testing types, we have reviewed the regulatory text for opportunities to improve readability and have made minor revisions to the regulatory language in hopes of providing clarity about what is required.

Final Rule Action:

- We are not finalizing our proposal to require biennial updates to the emergency preparedness program for LTC facilities only. All other affected providers are required to update the emergency preparedness program biennially.
- We are finalizing our proposal to eliminate the requirement that facilities document efforts to contact local, tribal, regional, State, and Federal emergency preparedness officials and facilities' participation in collaborative and cooperative planning efforts.
- We are not finalizing our proposal to require biennial emergency preparedness training for LTC facilities only. All other affected providers are required to provide emergency preparedness training biennially.
- We are finalizing our proposal to require inpatient providers to conduct two testing exercises annually and outpatient providers to conduct one testing exercise annually with only minor modification to improve the readability and clarity of the requirement.

Contact: Kristin Shifflett, 410–786–4133, Ronisha Blackstone, 410–786–6882.

13. Technical Corrections

In response to public comments, we are revising that language used to reference doctors of dental surgery that appear in the regulatory text for hospitals. The hospital CoPs reference these physicians in the Medical Staff CoP (§§ 482.22(c)(5)(1) and 482.22(c)(6)) as oromaxillofacial surgeons. The accurate and current terminology to use for these physicians is oral and maxillofacial surgeons. We are revising the regulatory text for these provisions.

Although we did not propose this in the proposed rule, in response to public comments regarding home health aide competency training, we are revising the language used to describe the process for conducting home health aide competency evaluations to restore longstanding official CMS policy. In the July 18, 1991 (56 FR 32967) final rule, ''Medicare Program; Home Health Agencies: Conditions of Participation,'' issued by CMS, we explicitly permitted the use of pseudo-patients and laboratory environments for purposes of home health aide competence evaluations, even though the regulatory text did not specifically mention ''pseudo-patients.'' We stated, ''[W]e believe that it is acceptable to conduct aide training with a mannequin and to conduct competency evaluations in a laboratory setting using 'pseudo patients' such as another aide or volunteer. We do not believe it is necessary to revise the regulations to clarify this point.'' (56 FR 32972). We agree with commenters that it is necessary to make a technical correction to the HHA CoPs as finalized on January 13, 2017 (82 FR 4584) to explicitly permit the use of pseudo-patients for purposes of home health aide competency evaluations in order to assure that the home health agency regulations and Interpretive Guidelines are consistent with the policy originally set forth in 1991.

This technical correction restores longstanding CMS policy, as stated in the 1991 rule, that permitted the use of pseudo-patients, and is consistent with the original intent of the January 2017 HHA CoPs final rule. We are making conforming changes to the definitions section of the HHA CoPs at § 484.2 to define the terms ''pseudo-patient'' and ''simulation'' as follows:

- ''Pseudo patient means a person trained to participate in a role-play situation, or a computer-based mannequin device. A pseudo-patient must be capable of responding to and interacting with the home health aide trainee, and must demonstrate the general characteristic to the primary patient population served by the HHA in key areas such as age, frailty, functional status, and cognitive status.''
- ''Simulation means a training and assessment technique that mimics the reality of the homecare environment, including environmental distractions and constraints that evoke or replicate substantial aspects of the real world in a fully interactive fashion, in order to teach and assess proficiency in performing skills, and to promote decision making and critical thinking.''

Because this is a clarification of an already-existing rule to codify longstanding policy, we do not believe that notice and comment rulemaking is necessary; we are therefore waiving notice and comment as indicated in Section I.C.14 below.

General Comments

Comment: We received many comments regarding issues that are out of scope of this rule, such as payment and reimbursement, Medicare advantage, prior authorization, physical therapy requirements and more. Some of these issues were for specific providers or suppliers and some were blanket comments.

Response: We have read and received all of the comments that are out of the scope of this rule. We will not be addressing them in this rule; however, we will consider them for future rulemaking.

14. Waiver of Proposed Rulemaking

We ordinarily publish a notice of proposed rulemaking in the **Federal Register** and invite public comment on the proposed rule. The notice of proposed rulemaking includes a reference to the legal authority under which the rule is proposed, and the terms and substances of the proposed

rule or a description of the subjects and issues involved. This procedure can be waived, however, if an agency finds good cause that a notice-and-comment procedure is impracticable, unnecessary, or contrary to the public interest and incorporates a statement of the finding and its reasons in the rule issued.

A notice-and-comment rulemaking procedure is unnecessary for the change related to adding the phrase ''or with a pseudo-patient as part of a simulation'' to the HHA aide competency evaluation requirement at § 484.80(c)(1) because this regulatory revision simply restores official CMS policy as stated in rulemaking dating back to 1991, and does not constitute a change in CMS policy. We are adding conforming changes to the definitions section at § 484.2 for the terms ''pseudo-patient'' and ''simulation.'' These changes are technical in nature. These changes to restore longstanding CMS policies are in the public interest, in order to assure that HHAs are adequately staffed with aides that have proven their competency to serve HHA patients. Home health aides may not provide services to patients until they have demonstrated their skill competencies. Allowing HHAs to use pseudo-patients as part of a simulation in order to demonstrate skill competencies facilitates timely placement of properly trained and evaluated aides in patient homes to provide much needed services in accordance with each patient's individualized plan of care. In the absence of this regulatory change to conform to longstanding CMS policy, in a survey conducted by the National Home Care Association 45 percent of responding HHAs reported being unable to provide full competency examinations for newly hired home health aides, creating a delay in delivering physician-ordered aide services to HHA patients. This delay in direct patient care services may be harmful to patients, and the technical change will resolve the underlying aide competency evaluation backlog problem that is creating the delay.

Therefore, we find good cause to waive the notice of proposed rulemaking and to issue these provisions on an interim basis. We are providing a 60-day public comment period.

C. Collection of Information Requirements

Under the Paperwork Reduction Act of 1995 (PRA), we are required to provide 30-day notice in the **Federal Register** and solicit public comment before a collection of information requirement is submitted to the Office of Management and Budget (OMB) for review and approval. In order to fairly evaluate whether an information collection should be approved by OMB, section 3506(c)(2)(A) of the PRA requires that we solicit comment on the following issues:

- The need for the information collection and its usefulness in carrying out the proper functions of our agency.
- The accuracy of our estimate of the information collection burden.
- The quality, utility, and clarity of the information to be collected.
- Recommendations to minimize the information collection burden on the affected public, including automated collection techniques.

We solicited public comment on each of the section 3506(c)(2)(A)-required issues for the following information collection requirements (ICRs).

1. Wage Costs

To derive average costs, we used data from the U.S. Bureau of Labor Statistics' May 2017 National Occupational Employment and Wage Estimates for all salary estimates (*https://www.bls.gov/oes/2017/may/oes_nat.htm*). In this regard, the following table presents the mean hourly wage, the cost of fringe benefits and overhead costs (calculated at 100 percent of salary), and the adjusted hourly wage cost.

TABLE 2—NATIONAL OCCUPATIONAL EMPLOYMENT AND WAGE ESTIMATES

Occupation title	Occupation code	Mean hourly wage ($/hour)	Fringe Benefits and overhead cost ($/hour)	Adjusted hourly wage cost ($/hour)
Healthcare Support Worker	31–9099	$18.56	$18.56	$37
Physicians and Surgeons	29–1060	103.22	103.22	206
Physicians and Surgeons, All Other	29–1069	101.63	101.63	203
Physicians, Psychiatrists	29–1066	103.89	103.89	208
Surgeons	29–1067	121.10	121.10	242
Registered Nurse—(RN-Quality Improvement, Home Care Coordinator, HealthCare Trainer, Quality Assurance Nurse, QAPI Nurse Coordinator, Infection Control Nurse Coordinator, Psychiatric RN)	29–1141	35.36	35.36	71
Medical Secretary (Clerical, Administrative Assistant)	43–6013	17.25	17.25	35
Administrative Services Manager (Facility Director)	11–3011	49.70	49.70	99
Management Occupations (Director, Community Relations Manager, Administrator)	11–0000	57.65	57.65	115
Pharmacist	29–1051	58.52	58.52	117
Medical and Health Services Manager (Administrator, Transplant Program Senior Administrator/Hospital Administrator/Medical and Health Services Managers, Program Director, Risk Management Director. QAPI Director, Organ Procurement Coordinator, Nurse manager, Director of Nursing, Nursing care facilities/skilled nursing facilities)	11–9111	53.69	53.69	107
Managers, All Others (Administrator)	11–9199	54.41	54.41	109
*Activities Specialist (Recreational Therapists, Nursing Care Facilities/SNFs)	29–1125	20.64	20.64	41
Internists (Medical Director, General Physician)	29–1063	95.37	95.37	191
Family and General Practitioner (Medical Director)	29–1062	100.27	100.27	201
Physical Therapist (Director of Rehab)	29–1123	42.34	42.34	85
Healthcare Social Worker (Social Worker)	21–1022	27.31	27.31	55
Mental Health and Substance Abuse Social Worker (Social Worker)	21–1023	22.99	22.99	46
Nurse Practitioner (Clinician, Nurse Practitioner Outpatient Care Center)	29–1171	51.68	51.68	103
Mental Health Counselor	21–1018	22.38	22.38	45
Physician Assistant	29–1071	50.37	50.37	101

TABLE 2—NATIONAL OCCUPATIONAL EMPLOYMENT AND WAGE ESTIMATES—Continued

Occupation title	Occupation code	Mean hourly wage ($/hour)	Fringe Benefits and overhead cost ($/hour)	Adjusted hourly wage cost ($/hour)
Licensed Practical and Licensed Vocational Nurses (Director of Nursing)	29–2061	21.98	21.98	44
First Line Supervisors of Office and Administrative Support Workers (Office Manager)	43–1011	28.14	28.14	56
Office Clerks, General (Clerical staff)	43–9061	16.30	16.30	33
Secretaries and Administrative Assistants (Clerical staff)	43–6010	19.74	19.74	39
Chief Executive	11–1011	94.25	94.25	189

* Salary information used is for Nursing Care Facility/SNF industry.

2. ICRs Regarding RNHCI Discharge Planning (§ 403.736(a) and (b))

It was discovered during review that the burden for existing requirements at 42 CFR 403.724(a), 403.730(a), 403.732, 403.736(a)(b), and 403.736(d) was erroneously not accounted for nor approved under the PRA prior to this rulemaking. Accordingly, the burden associated with these requirements is currently pending OMB approval (OMB control number 0938–NEW). Section 403.736 will reduce the extensive requirements for an RNHCI to coordinate with other medical providers for post-RNHCI care. Based on recent claims data, there was a combined annual total of 619 beneficiaries that stayed in the 18 facilities.

We estimate that the time currently required to develop and document discharge plans and activities is 1,238 burden hours (2 hours for each of the 619 beneficiaries discharged) and that it would be reduced by half. Of the approximately 619 annual discharges, we estimate that a RNHCIs burden would be reduced to one hour for each discharged individual. A RNHCI would not need to develop a discharge plan that includes medical care once a patient leaves the RNHCI because doing so would not be in keeping with the religious tenets of the patients they serve. We estimate that the healthcare support worker responsible for a patients discharge plan costs $37 an hour, including hourly wage and an estimated 100 percent add-on for fringe benefit costs and overhead costs (this is an HHS standard calculation). Based on our experience with RNHCIs, we estimate that it would take 1 hour to develop the proposed discharge instructions and discuss them with the patient or caregiver. We estimate a total of 619 annual discharges from RNHCIs at a savings of $37 per discharge for a total savings of $22,903 ($37 × 619 hours).

3. ICRs Regarding ASC Governing Body and Management (§ 416.41(b)(3)(i) and (ii))

We are finalizing our proposal with changes to eliminate the requirements at § 416.41(b)(3) that states the ASC must have a written transfer agreement with a hospital or ensure all physicians performing surgery in the ASC have admitting privileges at a local hospital that meets CMS hospitalization requirements. However, we will require that the ASCs have a notice requirement with hospitals and encourage a transfer agreement when possible. All ASCs easily meet this requirement and have established a relationship with their local hospital and obtained an agreement as usual and customary practice for running an ASC, with the exception of approximately twenty ASCs that have difficult relationships with their local hospitals. The savings would not be significant, however, it does affect the 20 ASCs by removing the requirement. The current information collection request for the ASC rules (OMB control number 0938–1071) does not address any potential burden associated with this requirement. We believe that having and maintaining written agreements is standard practice. Therefore, removing this requirement would not alter the current information collection burden for ASCs.

4. ICR Regarding ASC Medical Records (§ 416.47(b)(2))

We are finalizing our proposal to revise § 416.47(b)(2) by adding the phrase ''(as applicable)'' to the significant medical history and results of physical examination requirement of documents that must be included in the medical record in order to conform to the changes that we proposed to the mandatory medical history and physical examination requirement. There are no collection of information requirements associated with this proposed change because maintaining a medical record for each patient is a usual and customary practice in accordance with the implementing regulations of the PRA at 5 CFR 1320.3(b)(2).

5. ICRs Regarding ASC Patient Admission, Assessment and Discharge (§ 416.52(a)(1), (2), (3) and (4))

At § 416.52 we are finalizing our proposal to replace the requirement that every patient have a comprehensive medical history and physical examination (H&P) within 30 days prior to surgery in an ASC with a requirement that allows the operating physician and ASC to determine which patients would require more extensive testing and assessment prior to surgery. The burden associated with this requirement would be the time and effort necessary to create new policies for when, and whether, to require some form of history and physical that would require pre-operative examination and testing, and on what time schedule. The current information collection request for the ASC rules (OMB control number 0938–1071) does not account for any information collection related burden associated with the comprehensive H&P requirement. We assume that creating these policies (which could leave such decisions to the surgeon's discretion in most or all cases) would require 10 hours of physician time, 10 hours of RN time, and 10 hours of clerical time, at the preceding hourly rates, for a total of 30 hours per facility. This would be a one-time cost of $3,460 per facility ([10 × $242] + [10 × $71] + [10 × $33]), and $19.2 million for all 5,557 facilities. Therefore, this proposed requirement would increase the information collection related burden by $19.2 million and 166,710 hours (30 hours × 5,557 facilities) on a one-time basis for all ASCs.

6. ICRs Regarding Hospice Aide and Homemaker Services (§ 418.76)

At § 418.76(a) we are finalizing our proposal to defer to State training and competency requirements, where they exist, for hospice aides. The information

collection request for the hospice requirements (OMB control number 0938–1067) estimates that a hospice would spend 5 minutes per newly hired hospice aide to document verification that an aide meets the required training and competency requirements, for a total of 372 annual burden hours for all hospices at a cost of $11,540. This change to the actual training and competency requirements would not alter the requirement to document the fact that a hospice aide meets one of the training and competency requirements set forth in the rule; therefore there would be no change to the existing collection of information estimates because the estimates relate to the unchanged documentation requirements rather than the actual training and competency requirements that would be revised by this change.

7. ICRs Regarding Drugs and Biologicals, Medical Supplies, and Durable Medical Equipment (§ 418.106(a))

At § 418.106(a) we are finalizing our proposal to remove the requirement that a hospice ensure that the interdisciplinary group confers with an individual with education and training in drug management as defined in hospice policies and procedures and State law, who is an employee of or under contract with the hospice to ensure that drugs and biologicals meet each patient's needs. The information collection request for the hospice requirements (OMB control number 0938–1067) states that the burden associated with this requirement is the time necessary to document the results of this consultation in each patient's clinical record. In the information collection request we assumed that an average hospice would confer with a pharmacist, and that the pharmacist would document the results of his or her consultation. We estimated that it requires 5 minutes to document the initial review of a patient's drug and biologicals. Additionally, we estimated that it requires 5 minutes of the pharmacist's time to document a review of updates to the patient's drug profile. Based on a 17 day median length of service, we assumed that each patient would likely receive one update to their plans of care. At an average hourly rate of $117 for a pharmacist, we estimated that it would cost a hospice $19.50 per patient ($117 × [5 minutes for initial + 5 minutes for 1 update]) and an annual cost of $6,942 ($19.50 × 356 patients). The total annual burden hours for all hospices was estimated to be 264,588 hours (1,587,527 patients × .1666 hour per patient), and the total annual burden cost for all hospices (taking into account new wage data) is estimated to be $30,956,777 ($19.50 per patient × 1,587,527 patients). Therefore, removing the requirement that a hospice must ensure that the interdisciplinary group confers with an individual with education and training in drug management would result in a burden reduction of 264,588 hours and $30,956,777.

The information collection request will be revised and sent to OMB.

H. ICRs Regarding Hospices That Provide Hospice Care to Residents of a SNF/NF or ICF/IID (§ 418.112(c)(10) and (f))

At § 418.112(f) we are finalizing a requirement to allow hospices and long term care facilities the additional flexibility to negotiate the format and schedule for orienting long term care facility staff regarding certain hospice-specific information. This change does not effect the existing hospice information collection request (OMB control number 0938–1067).

9. ICRs Regarding Hospital Quality Assessment and Performance Improvement (QAPI) Program (§ 482.21)

We are finalizing the proposed new standard at § 482.21(f), ''Unified and integrated QAPI program for multi-hospital systems''. We would allow that for a hospital that is part of a hospital system consisting of two or more separately certified hospitals subject to a system governing body legally responsible for the conduct of each hospital, the system governing body could elect to have a unified and integrated QAPI program for all of its member hospitals after determining that such a decision is in accordance with all applicable State and local laws.

As stated in the information collection request for the hospital requirements (expired OMB control number 0938–0328), we estimate that the burden associated with updating and, in some instances, writing new hospital policies directly related to patient care would be an average of eight (8) hours annually for each member of hospital staff involved in the specific patient care policies addressed.

Patient care policy development (and revision) by hospital medical staff is essential to patient health and safety because it provides the framework within which all patient care services are furnished. Thus, we have included the involvement of a physician at approximately $1,624 annually (8 burden hours × $203), a QAPI nurse coordinator at $568 annually (8 burden hours × $71), and a medical secretary at $280 annually (8 burden hours × $35).

We estimate the necessary policy changes needed to comply with the requirements proposed in this rule would cost $2,472 per year ($1,624 + $568 + $280) for each of the 424 hospital systems that would be eligible to do so and that would choose to exercise this option. Therefore, the total annual cost for all eligible hospital systems to meet these information collection requirements would be approximately $1 million.

10. ICRs Regarding Hospital Medical Staff, Medical Records Services, and Surgical Services (§§ 482.22, 482.24, and 482.51)

At § 416.52, we are finalizing our proposal to replace the requirement that every patient have a comprehensive H&P within 30 days prior to surgery in an ASC with a requirement that allows the operating physician and ASC to determine which patients would require more extensive testing and assessment prior to surgery. As discussed in ''Provisions of the Proposed Regulations,'' section II.D.2 of the proposed rule, there is a similar regulatory requirement for hospital outpatient surgery. Based on the substantial similarity between these two service settings, we proposed, through the revisions to §§ 482.22, 482.24, and 482.51 discussed in section II.D.2, to provide an exception to these requirements for outpatient surgery in hospitals.

As stated in the information collection request for the hospital requirements (expired OMB control number 0938–0328), which is in the process of being reinstated, we estimate that the burden associated with updating and, in some instances, writing new hospital policies directly related to patient care would be an average of eight (8) hours annually for each member of hospital staff involved in the specific patient care policies addressed.

Patient care policy development (and revision) by hospital medical staff is essential to patient health and safety because it provides the framework within which all patient care services are furnished. Thus, we have included the involvement of a physician at approximately $1,624 annually (8 burden hours × $203), a nurse coordinator at $568 annually (8 burden hours × $71), and a medical secretary at $280 annually (8 burden hours × $35).

We estimate that the necessary policy changes needed to comply with the requirements in this rule would cost $2,472 per year ($1,624 + $568 + $280) for each of the 4,823 hospitals that might choose to exercise this option.

Therefore, the total annual cost for all hospitals to meet these information collection requirements would be approximately $11.9 million.

11. ICRs Regarding Hospital Medical Staff: Autopsies (§ 482.22)(d))

We are finalizing our proposal to remove the requirement at § 482.22(d), which states that a hospital's medical staff should attempt to secure autopsies in all cases of unusual deaths and of medical-legal and educational interest. Hospitals are further required to define a mechanism for documenting permission to perform an autopsy, and they must have a system for notifying the medical staff, and specifically the attending practitioner, when an autopsy is being performed. Since more detailed, specific requirements regarding medical-legal investigations and autopsies for hospitals are covered by the individual State laws in which the hospital is located, there are no collection of information requirements associated with this proposed change.

12. ICRs Regarding Hospital Infection Control (§ 482.42)

We are finalizing the proposed new standard at § 482.42(d), ''Unified and integrated infection control program for multi-hospital systems.'' Like the proposed requirements for a unified and integrated QAPI program, the proposed standard for infection control would allow that for a hospital that is part of a hospital system consisting of multiple separately certified hospitals subject to a system governing body legally responsible for the conduct of each hospital, such system governing body could elect to have a unified and integrated infection control program for all of its member hospitals after determining that such a decision was in accordance with all applicable State and local laws.

As stated in the information collection request for the hospital requirements (OMB control number 0938–0328), which is in the process of being reinstated, we estimate that the burden associated with updating and, in some instances, writing new hospital policies directly related to patient care would be an average of eight (8) hours annually for each member of hospital staff involved in the specific patient care policies addressed.

Patient care policy development (and revision) by hospital medical staff is essential to patient health and safety because it provides the framework within which all patient care services are furnished. Thus, we have included the involvement of a physician at approximately $1,624 annually (8 burden hours × $203), an infection control nurse coordinator at $568 annually (8 burden hours × $71), and a medical secretary at $280 annually (8 burden hours × $35).

We estimate the necessary policy changes needed to comply with the requirements proposed in this rule would cost $2,472 per year ($1,624 + $568 + $280) for each of the 424 hospital systems that would be eligible to do so and that would elect to exercise this option. Therefore, the total annual cost for all eligible hospital systems to meet these information collection requirements would be approximately $1 million.

13. ICRs Regarding Special Requirements for Hospital Providers of Long-Term Care Services (''Swing-Beds'') (§ 482.58(b)(1), (4), (5), and (8), and Parallel CAH Requirements: § 485.645(d)(1), (4), (5), and (8))

At §§ 482.58(b)(1) and 485.645(d)(1) (cross-referenced long-term care requirement at § 483.10(f)(9)) we are finalizing our proposal to remove the requirement for hospital and CAH swing-bed providers to provide the right for patients to choose to or refuse to perform services for the facility and if they so choose; (a) document in the resident's plan of care, (b) noting whether the services are voluntary or paid and (c) provide wages for the work being performed given the location quality, and quantity of work requiring comparable skills.

We assume that each of the hospital swing-bed providers (478 hospitals) and CAH swing-bed providers (1,246 CAHs) has an activities specialist employed at $41 per hour who would oversee the residents who have chosen to perform services for the facility, and document and update the plan of care accordingly. We believe that given the limited budget of most rural providers, services are being provided to the CAH on a voluntary basis and that these providers are not compensating patients for providing these services. The current regulatory burden for compliance with this requirement is approximately $29.4 million for all hospital and CAH swing-bed providers, or $17,056 per hospital or CAH swing-bed provider (1,724 hospital and CAH swing-bed providers × $41 an hour for an activities specialist × 8 hours per week × 52 weeks per year), which are the cost savings to the providers as a result of the removal of this requirement.

At § 482.58(b)(4) (and § 485.645(d)(4)) (cross-referenced long-term care requirement at § 483.24(c)), we are finalizing our proposal to remove the requirement for hospital and CAH swing-bed providers to provide an ongoing activity program that is directed by a qualified therapeutic recreation specialist or an activities professional who meets certain requirements as listed at § 483.24(c)(2). We assume that each of the hospital swing-bed providers (478 hospitals) and CAH swing-bed providers (1,246 CAHs) has an activities specialist employed at least part time at $41 per hour. The current regulatory burden for compliance with this requirement is based on the activities specialist organizing, overseeing, and scheduling the activity. The cost savings as a result of the removal of this requirement are approximately $73.5 million for all hospital and CAH swing-bed providers, or $42,640 per hospital or CAH swing-bed provider (1,724 hospital and CAH swing-bed providers × $41 an hour for an activities specialist × 1,040 hours per year) which are the cost savings to the providers.

We are finalizing our proposal to remove the requirement at §§ 482.58(b)(5) and 485.645(d)(5) (cross-referenced long-term care requirement at § 483.70(p) for hospital and CAH swing-bed providers to employ a qualified social worker on a full-time basis if the facility has more than 120 beds. Given that this provision is not applicable to either provider type due to the regulatory requirements for each, it does not impose a burden upon hospitals and as such, its removal would not result in a savings of economic burden hours or dollars.

At §§ 482.58(b)(8) and 485.645(d)(8) (cross-referenced long-term care requirement at § 483.55(a)(1)) we are finalizing our proposal to remove the requirement for hospital and CAH swing-bed providers to assist in obtaining routine and 24-hour emergency dental care to its residents.

Under the current CoPs, hospitals and CAHs are currently required to address the emergent dental care needs of their patients at § 482.12(f)(2) for hospitals, and at § 485.618 (emergency services) for CAHs. As a result, we have calculated the burden associated with the provision of routine dental care for hospital and swing-bed patients. The American Dental Association recommends annual dental checkups for routine dental care for adults over 60 years of age. With an average length of stay in a hospital or CAH swing-bed of 1–2 weeks and an average daily census of 2 patients, we assume that 1 patient receiving swing-bed services will require routine dental services per month. While a dentist and dental hygienist provide the dental services, Medicare is billed for the provision of these services. The costs to the provider

are related to the nursing activities associated with the patient receiving the dental services. The current regulatory burden for compliance with this requirement is approximately $2.9 million for all hospital and CAH swing-bed providers, or $1,704 per hospital or CAH swing-bed provider (1,724 hospital and CAH swing-bed providers × $71 an hour for a RN × 24 hours per year), which are the cost savings to the providers as a result of the removal of this requirement. The information collection requests will be revised and sent to OMB for approval (OMB control number 0938–0328 for hospitals and 0938–1043 for CAHs).

14. ICRs Regarding Special Requirements for Psychiatric Hospitals (§ 482.61(d))

At § 482.61(d) we are finalizing our proposal to clarify the requirement allowing non-physician practitioners to document progress notes in accordance with State laws and scope of practice requirements. In accordance with the information collection request for the hospital requirements, which includes the special requirements for psychiatric hospitals (OMB control number 0938–0328), no burden is associated with recordkeeping, as the documentation and maintenance of medical records is usual and customary. However, since we believe that clarification of the intent of the regulation is necessary and will result in non-physician practitioners (specifically physician assistants, nurse practitioners, psychologists, and clinical nurse specialists) documenting in the progress notes for patients receiving services in psychiatric hospitals, we have calculated savings for this provision in the RIA which are essentially identical to those we would estimate under the PRA.

15. ICRs Regarding Special Requirement for Transplant Centers and Definitions (§§ 482.68 and 482.70)

We are finalizing the proposed nomenclature change at part 482 and the transplant center regulations at §§ 482.68, 482.70, 482.72 through 482.104, and at § 488.61. Because this change would update the terminology used in the regulations to conform to the terminology that is widely used and understood within the transplant community, there are no collection of information requirements associated with this proposal.

16. ICRs Regarding Data Submission, Clinical Experience, and Outcome Requirements for Re-Approval of Transplant Centers (§ 482.82)

Section 482.82 requires that, except as specified in § 488.61, transplant centers must meet all the data submission, clinical experience, and outcome requirements to be re-approved for Medicare participation. Section 482.82(a) requires that no later than 90 days after the due date established by the OPTN, a transplant center must submit to the OPTN at least 95 percent of the required data submissions on all transplants (deceased and living donors) it has performed over the 3 year approval period. Furthermore, § 482.82(b) requires transplant centers to perform an average of 10 transplants per year during the prior 3 years and § 482.82(c) requires transplant centers to meet the outcome requirements for Medicare re-approval. The burden associated with this requirement would be the time it would take a transplant program to submit the required information (OMB control number 0938–1069). However, as required by §§ 482.72 and 482.45(b), a hospital in which a transplant program is located, must belong to the OPTN, and the OPTN requires that these hospitals submit this data to the OPTN. Therefore, we believe that the requirements under § 482.82 do not impose an additional burden on transplant programs because all Medicare participating transplant programs are already submitting this information to the OPTN. Removing these requirements will have no effect on the collection of information burden on transplant programs.

17. ICRs Regarding Special Procedures for Approval and Re-Approval of Organ Transplant Centers (§ 488.61(f) Through (h))

Section 488.61(f) through (h) sets out the process for our consideration of a transplant center's mitigating factors in initial approval and re-approval surveys, certifications, and enforcement actions for transplant centers. The provisions also set out definitions and rules for transplant systems improvement agreements. We are finalizing our proposal to remove the requirements at § 488.61(f) through (h) for mitigating factors and transplant systems improvement agreements for the re-approval process for transplant centers. This change is complementary to the removal of § 482.82, described previously. The information collection request (OMB control number 0938–1069) does not account for any information collection related burden associated with the requirements in § 488.61(f) through (h) for the re-approval process. Therefore, we estimate that the requirements under § 488.61(f) would require a transplant program to write and submit the initial formal notice of the program's intent to seek mitigating factors re-approval, and write and submit a request for consideration of mitigating factors (which would include all of the content listed in § 488.61(f)(2)). We estimate that this would take a medical director, a transplant center senior administrator, and a hospital administrator approximately 5 hours, or 2 hours for the medical director and the transplant program senior administrator and 1 hour for the hospital administrator, to complete and submit these mitigating factors for re-approval, as described in Table 3.

TABLE 3—ANNUAL BURDEN HOURS AND COST FOR TRANSPLANT PROGRAMS TO SUBMIT MITIGATING FACTORS FOR RE-APPROVAL

Position	Hourly	Hours required	Total cost estimate
Medical Director	$191	2	$382
Transplant Program Senior Administrator	107	2	214
Hospital Administrator	107	1	107
Totals		5	703

In total, we estimate that an average of 14 programs would submit mitigating factors annually. Thus, for those 14 programs we estimate that it would require 70 burden hours (5 burden hours × 14 programs) at a cost of $9,842

($703 × 14 programs). Removing this requirement would yield an estimated savings to transplant programs of 5 burden hours each and a total of 70 burden hours for all 14 programs, with a total cost savings of $9,842.

In addition, we estimate that the transplant hospital in conjunction with the transplant program that is located in the hospital, would submit mitigating factors and then would also enter into systems improvement agreements, as described under § 488.61(h) annually. This would require the hospital to enter into a binding agreement with CMS to allow the program additional time to achieve compliance with the CoPs. We estimate that this would take a medical director, a transplant program senior administrator, a hospital administrator, and an administrative assistant approximately 14 hours, or 4 hours for the medical director, transplant program senior administrator, and an administrative assistant, and 2 hours for the hospital administrator to complete these activities (including notifying patients about the degree of noncompliance by mail and organizing and completing the other tasks listed in § 488.61(h)(1) as required by the terms in the systems improvement agreement), as described in Table 4.

TABLE 4—ANNUAL BURDEN HOURS AND COST FOR TRANSPLANT PROGRAMS TO ENTER INTO A SYSTEMS IMPROVEMENT AGREEMENT FOR RE-APPROVAL

Position	Hourly	Hours required	Total cost estimate
Medical Director	$191	4	$764
Transplant Program Senior Administrator	107	4	428
Hospital Administrator	107	2	214
Administrative Assistant	35	4	140
Totals		14	1,546

In total, we estimate that an average of 14 programs will submit mitigating factors annually. Thus, for those 14 programs we estimate that it would require 196 burden hours (14 burden hours × 14 programs) at a cost of $21,644 ($1,546 × 14 transplant programs). In the context of the proposed rule, removing this requirement would yield an estimated savings to transplant programs of 14 burden hours each and a total of 196 burden hours for all 14 programs, with a total cost savings of $21,644.

18. ICRs Regarding HHA Home Health Aide Services (§ 484.80(h)(3))

We are finalizing the proposal to eliminate the requirement at § 484.80(h)(3) that the HHA conduct a full competency evaluation of deficient home health aides, and replace it with a requirement to retrain the aide regarding the identified deficient skill(s) and require the aide to complete a competency evaluation related only to those skills. We are also finalizing a change to permit HHAs to use either patients or pseudo-patients when conducting competency evaluations for home health aides. The content of an aide competency examination and whether patients or pseudo-patients are used in the process do not have an associated collection of information requirement. Therefore, this proposed change would neither impose nor remove any collection of information burdens.

19. ICRs Regarding HHA Clinical Records (§ 484.110(e))

As discussed in section I.B.6.c. of this final rule, we are not finalizing the proposal to allow HHAs 4 business days to provide patients with information from their clinical records upon request. Consequently, there are no new information collection requirements.

20. ICRs Regarding CORF Utilization Review Plan (§ 485.66)

We are finalizing the proposal to reduce the required frequency in which CORFs would be required to complete a ''utilization review plan'' from quarterly to annually. Changing from a quarterly implementation of the utilization review plan to an annual implementation would reduce the current documentation requirements (OMB control number 0938–1091) on CORFs by 75 percent each year. For the purposes of our analysis, we estimate that it would take a CORF approximately 8 hours for administrative, clinical and clerical staff to review and evaluate the necessary and efficient use of services provided by the facility on a quarterly basis, for a total of 32 hours per year per CORF and 6,016 hours for all 188 CORFs. In a 1-year period, we estimate a savings of $1,680 per facility ($560 × 3 quarters), and a combined total savings of $315,840 for all CORFs ($1,680 × 188 CORFs). We will submit the revised information collection request to OMB for approval.

TABLE 5—CORF—HOURLY COSTS AND BURDEN HOURS

Position	Hourly costs per CORF	Burden hours per CORF	Cost estimate per CORF
Administrator	$107	2	$214
Clerical Staff	33	2	66
Physical Therapist	85	2	170
Social Worker	55	2	110
Total		8	560

21. ICRs Regarding CAH Organizational Structure (§ 485.627(b)(1))

As of 2017, there were approximately 1,353 CAHs that were certified by Medicare. We are finalizing our proposal for revision of the CAH disclosure requirements imposed on CAHs removes the requirement for CAHs to disclose to CMS its owners, or those with a controlling interest in the CAH or in any subcontractor in which the CAH directly or indirectly has a 5 percent or more ownership interest, in accordance with 42 CFR part 420, subpart C (OMB control number 0938–1043). While we estimate that these changes occur at 2 CAHs per year on average between all 1,353 CAHs, with the vast majority not experiencing any such changes throughout the lifetime of the CAH, each CAH is still required to review the duplicative documentation. As discussed in our rule, *Medicare Program; Criteria and Standards for Evaluating Regional Durable Medical Equipment, Prosthetics, Orthotics and Supplies (DMEPOS); Final Rule and Request for Comments* (57 FR 2790, June 18, 1992), the burden associated with this requirement is 1-hour per facility. As a result, this will save all CAHs an estimated $144,771 and will save each CAH $107 (1-burden hour for an administrator at $107 per hour × 1,353 CAHs).

22. ICRs Regarding CAH Provision of Services (§ 485.635(a)(4))

Section 485.635(a)(4) requires CAHs to conduct an annual review of all its policies and procedures (OMB control number 0938–1043). We are finalizing our proposal for revision of the patient care policies requirements imposed on CAHs would reduce the frequency that is currently required for CAHs to perform a review of all their policies and procedures. We anticipate that a change from an annual review to a biennial review would reduce the burden on CAHs by half in a given period of time. For the purposes of our analysis, we estimate that it would take a CAH approximately 16 hours for administrative and clinical staff to review and make changes to policies and procedures annually. In a 2-year period, we estimate a savings of $1,968 per facility, and a combined total savings of $2.7 million for CAHs ($1,968 × 1,353 CAHs), or annualized savings of approximately $1.3 million.

We estimate that the CAH staff time and associated costs would be assigned to a biennial review as shown in Table 6.

TABLE 6—HOURLY COSTS AND BURDEN HOURS

Position	Hourly cost per CAH	Burden hours per CAH	Cost estimate per CAH
Administrator	$189	4	$756
Clerical staff	39	3	117
Registered Nurse	71	3	213
Nurse practitioner	103	3	309
Physician	191	3	573
Totals		16	1,968

23. ICRs Regarding Special Requirements for CAH Providers of Long-Term Care Services (''Swing-Beds'') (§ 485.645(d)(1), (4), (5) and (8))

We have included the discussion of the ICRs regarding special requirements for CAH providers of long-term care services in the discussion of the ICRs regarding special requirements for hospital providers of long-term care services, which can be found in section I.C.13 of this rule (ICRs Regarding Special Requirements for Hospital Providers of Long-Term Care Services (''Swing Beds'') (§ 482.58(b)(1), (4), (5), and (8), and Parallel CAH requirements: § 485.645(d)(1), (4), (5), and (8))).

24. ICRs Regarding CMHCs (§ 485.914(d))

Section 485.914(d)(1) requires each CMHC to update each client's comprehensive assessment via the CMHC interdisciplinary treatment team, in consultation with the client's primary health care provider (if any), no less frequently than every 30 days. We are modifying the requirement at § 485.914(d) to remove the 30-day assessment update timeframe for those clients who do not receive PHP services. Under the current 30-day time frame requirement, each client receives an updated assessment 12 times per year (OMB control number 0938–1245). We estimate that, in accordance with the proposed need-based assessment update requirements, each non-PHP client would receive 2 assessment updates in a year. Therefore, we estimate that this change would reduce the burden of 10 assessments per client, per year.

As of August 2017 there are 161 Medicare participating CMHCs serving 3,122 Medicare beneficiaries and an estimated 2,080 non-Medicare clients, for an average of 32 clients per CMHC. In order to develop the estimated number of non-Medicare clients we divided the total number of Medicare beneficiaries who received partial hospitalization services by the total number of Medicare-participating CMHCs to establish the average number of Medicare beneficiaries per CMHC. This resulted in 19 beneficiaries per CMHC. We then assumed that, in order to comply with the 40 percent requirement (§ 485.918(b)(1)(v)), those 19 beneficiaries only accounted for 60 percent of an average CMHC's total patient population. This means that an average CMHC also treated another 13 clients who did not have Medicare as a payer source, for a total of 32 clients (Medicare + non-Medicare) in an average CMHC. Therefore, all CMHCs combined would have approximately 2,093 non-PHP clients per year (13 per CMHC), and approximately 20,930 assessments would be reduced nationwide per year (2,093 patients × 10 assessments per patient). We estimate that documenting each assessment update requires 10 minutes of a CMHC clinician's time, for a total savings of 3,487 hours nationwide (0.1666 hours × 20,930 assessment updates). At a cost of $7.50 for a mental health counselor to document each assessment, the total cost savings would be $156,975 ($7.50 × 20,930 assessments).

25. ICRs Regarding Portable X-Ray Services (§§ 486.104(a) and 486.106(a))

We are finalizing our proposal to revise the requirements for portable x-ray technologist personnel qualifications at § 486.104 to align the current requirements at § 486.104(a)(1), (2), (3), and (4) with those for hospital radiologic technologists at § 482.26(c)(2) which are focused on the qualifications of the individual performing services as permitted by State law. Although changing the qualifications would

require management time, with the associated cost of those hours, in order to revise the internal personnel descriptions and qualifications, we believe that this proposed change would impose no burden because maintaining internal personnel descriptions and qualifications is a standard business practice. Therefore, this burden would not be subject to the PRA in accordance with the implementing regulations of the PRA at 5 CFR 1320.3(b)(2).

We are finalizing our proposal to revise the requirements for portable x-ray orders at § 486.106(a)(2). We proposed to remove the requirement that physician or non-physician practitioner's orders for portable x-ray services must be written and signed. We also proposed to replace the specific requirements related to the content of each portable x-ray order with a cross-reference to the requirements at 42 CFR 410.32, which also apply to portable x-ray services. These changes would simplify the ordering process for portable x-rays and promote the use of more efficient ordering methods, such as electronic orders.

In the information collection request (OMB control number 0938–0338) we estimate that the current order requirements would impose the following burdens:

- 3 minutes to write an order × 3,986,000 portable x-rays exams ordered = 199,300 hours × $71/hour for a nurse = $14,150,300.
- $1 for printing and faxing verbal orders to physician offices for signature × 2,500,000 verbal orders = $2,500,000.
- 2,000,000 follow-up calls regarding the status of faxes × 10 minutes of time for clerical staff (5 minutes for portable x-ray clerical staff + 5 minutes for ordering physician clerical staff) = 333,333 hours × $33/hour = $10,999,989.

All of these burdens would be eliminated by revising the current ordering standards. Therefore, we estimate a proposed information collection savings of $27.7 million from this proposed change.

26. ICRs Regarding RHC and FQHC Provision of Services (§ 491.9(b)(4))

There are currently more than 4,100 RHCs and approximately 1,400 FQHC organizations furnishing services at approximately 12,000 or more total locations. Many FQHC organizations have multiple delivery sites, and as of May 2017 there were 4,160 RHC and 7,874 FQHC delivery sites. All CMS-certified sites are subject to our requirements and we are therefore utilizing the total number of current sites in our burden reduction calculations.

We are finalizing our proposal to revise § 491.9(b)(4) to reduce the number of times that RHCs and FQHCs perform a review of all their policies and procedures. Changing from an annual review to a review every other year would reduce the burden on RHCs and FQHCs by half in a given period of time. In the currently approved information collection request (OMB control number 0938–0334), we only included burden estimates for RHCs. However, we recognize that the information collection applies to FQHCs as well. Therefore, we estimate that it would take a RHC or FQHC approximately 4 hours for clinical staff to review and make changes to policies and procedures annually, for a total of 48,136 hours for all 12,034 RHC and FQHC locations. In a 2-year period, RHCs and FQHCs would use 96,272 total hours to comply with the requirements to annually review all of their policies and procedures. Under the proposed change to review policies every other year, we estimate that in a 2-year period, it will take a total of 48,136 hours, for a savings of 48,136 hours per year. We estimate a savings of $608 per facility (see Table 7) for a combined total savings of $7.3 million biennially for 12,034 RHCs or FQHCs ($608 × 12,034 RHCs and FQHCs), or annualized savings of half these amounts. We will submit a revised information collection request to OMB for approval.

TABLE 7—HOURLY WAGES AND BURDEN HOURS

Position	Hourly cost per RHC/FQHC (includes 100% for benefits and overhead)	Burden hours per RHC/FQHC	Cost estimate per RHC/FQHC
Physician	$203	2	$406
Mid-Level Provider (PA or NP)	101	2	202
Total		4	608

27. ICRs Regarding RHC and FQHC Program Evaluation (§ 491.11(a))

We are finalizing the proposal to revise § 491.11(a) to reduce the number of times that RHCs and FQHCs carry out or arrange for an annual evaluation of the total program. Changing from an annual evaluation to an evaluation every other year would reduce the burden on RHCs and FQHCs by half in a given period of time. In the currently approved information collection request (OMB control number 0938–0334), we only included burden estimates for RHCs, however we recognize that the information collection applies to FQHCs as well. Therefore, we estimate that it would take a RHC or FQHC approximately 6 hours for administrative and clinical staff to perform an evaluation of its total program annually for a total of 72,204 hours for all 12,034 RHC and FQHC locations. In a 2-year period, RHCs and FQHCs would use 144,408 total hours to comply with the requirement for an evaluation of the total program. Under the proposed change to evaluate the total program every other year, we estimate an hourly savings of 72,204 total hours and a cost savings of $822 per facility (see Table 8), for a combined total savings of $9.9 million biennially for 12,034 RHCs or FQHCs ($822 × 12,034 RHC and FQHC locations), or annualized savings of half these amounts.

TABLE 8—HOURLY WAGES AND BURDEN HOURS

Position	Hourly cost per RHC/FQHC (includes 100% for benefits and overhead)	Burden hours per RHC/FQHC	Cost estimate per RHC/FQHC
Administrator/Health Services Manager	$107	2	$214
Physician	203	2	406
Mid-Level Provider (PA or NP)	101	2	202
Total		6	822

28. ICRs Regarding Emergency Preparedness for Providers and Suppliers

a. Review of the Emergency Preparedness Program

At § 482.15(a), (b), (c), and (d) for hospitals and parallel regulatory citations for other facilities, we are finalizing our proposal to allow providers to review their program at least every 2 years. However, we are withdrawing the proposal for LTC facilities. As of May 2017, there were approximately 72,646 total facilities, or 56,983 excluding LTC facilities. All are required to review their emergency preparedness program annually, which includes a review of their emergency plan, policies and procedures, communication plan, and training and testing program.

For our analysis, we estimate that reducing this requirement from annually to biennially would reduce compliance costs related to review of the emergency plan by 50 percent. The methodology used for our cost estimate analysis generally mirrors the methodology used for the annual review of the emergency plan Emergency Preparedness final rule (81 FR 63930) with a 50 percent reduction in the cost estimate calculation; however, after receiving additional feedback from stakeholders, we have determined that we underestimated the amount of time it would take to review the emergency plan. As a result, we have presented current burden hours associated with reviewing the emergency plan that reflects the increased associated burden hours relative to the information collection request for this provision (OMB control number 0938–1325). As in the Emergency Preparedness final rule (81 FR 63930), we assume that the individuals involved in the review of the emergency plan include an administrator, director of nursing, a RN, a physician, a social worker, a counselor, and an office manager, depending on the facility type. Based on May 2017 BLS salary data, we calculated the hourly mean wage for each position for this requirement identified in the Emergency Preparedness final rule (81 FR 63930).

We estimate that the finalized change will accrue total annualized cost savings of $69,639,324 and 657,345 burden hours saved, or biennial savings of double these amounts. We list a detailed calculation for each facility below, based on facility numbers available as of 2017:

- *RNHCIs:* Combined total savings of $9,684 for 18 RNHCIs ((8 burden hours for an administrator at $107 plus 5 burden hours for a director of nursing at $44 per hour) × 18 RNHCIs × 50 percent).
- *ASCs:* Combined total savings of $6,257,182 for 5,557 ASCs ((8 burden hours for an administrator at $109 per hour plus 4 burden hours for a physician at $203 per hour plus 8 burden hours for a quality improvement RN at $71 per hour) × 5,557 ASCs × 50 percent).
- *Hospices:* Combined total savings of $5,916,502 for 4,489 hospice facilities ((8 burden hours for an administrator at an hourly wage of $107 per hour plus 4 burden hours for a physician at $203 per hour plus 4 burden hours for a counselor at $45 per hour plus 4 burden hours for a social worker at $55 per hour plus 8 burden hours for a RN at $71 per hour) × 4,489 hospices × 50 percent).
- *PRTFs:* Combined total savings of $569,976 for 374 PRTFs ((8 burden hours for an administrator $107 per our plus 8 burden hours for a physician at $203 per hour plus 8 burden hours for a RN at $71 per hour) × 374 PRTFs × 50 percent).
- *PACE:* Combined total savings of $232,068 for 233 PACE organizations ((8 burden hours for an administrator at $107 per hour plus 8 burden hours for a home care coordinator at $71 per hour plus 8 burden hours for a RN at $71 per hour) × 233 PACE organizations × 50 percent).
- *Hospitals:* Combined total savings of $11,700,598 for 4,823 hospitals ((8 burden hours for an administrator at $109 per hour plus 8 burden hours for a physician at $203 per hour plus 8 burden hours for a risk management director at $107 per hour plus 8 burden hours for a quality assurance nurse at $71 per hour plus 8 burden hours for a facility director at $99 per hour plus 4 burden hours for a medical secretary at $35 per hour) × 4,823 hospitals × 50 percent).
- *ICF/IID:* Combined total savings $3,475,290 for 6,097 ICF/IIDs ((8 burden hours for an administrator at $107 per hour plus 4 burden hours for a RN $71 per hour) × 6,097 ICF/IIDs × 50 percent).
- *HHA:* Combined total savings of $16,512,192 for 12,624 HHAs ((8 burden hours for an administrator at $107 per hour plus 8 burden hours for a nursing director at $107 per hour plus 8 burden hours for a director of rehab at $85 per hour plus 4 burden hours for an office manager at $56 per hour) × 12,624 HHAs × 50 percent).
- *CORF:* Combined total savings of $144,384 for 188 CORFs ((8 burden hours for an administrator at $107 per hour plus 8 burden hours for a physical therapist at $85 per hour) × 188 CORFs × 50 percent).
- *CAH:* Combined total savings of $1,693,956 for 1,353 CAHs ((8 burden hours for an administrator at $107 per hour plus 8 burden hours for a director of nursing at $107 per hour plus 8 burden hours for a facility director at $99 per hour) × 1,353 CAHs × 50 percent).
- *Organizations:* Combined total savings of $1,241,448 for 2,076 Organizations ((8 burden hours for an administrator at $107 per hour plus 4 burden hours for a physical therapist at $85 per hour) × 2,076 Organizations × 50 percent).
- *CMHCs:* Combined total savings of $150,052 for 161 CMHCs ((8 burden hours for an administrator at $107 per hour plus 8 burden hours for a RN at $71 per hour plus 8 burden hours for a social worker at $55 per hour) × 161 CMHCs × 50 percent).
- *OPOs:* Combined total savings of $121,568 for 58 OPOs ((8 burden hours for an OPO director at $107 per hour plus 8 burden hours for a physician at $203 per hour plus 8 burden hours for

a QAPI director at $107 per hour plus 8 burden hours for an organ procurement coordinator at $107 per hour) × 58 OPOs × 50 percent).

• *RHC/FQHC:* Combined total savings of $10,108,560 ((8 burden hours for an administrator at $107 per hour plus 8 burden hours for a nurse practitioner/physician assistant at $103 per hour) × 4,160 RHCs × 50 percent) $3,494,400 + ((8 burden hours for an administrator at $107 per hour plus 8 burden hours for a nurse practitioner/physician assistant at $103 per hour × 7,874 FQHCs × 50 percent) $6,614,160).

• *ESRD Facilities:* Combined total savings of $11,505,864 for 6,898 dialysis facilities ((8 burden hours for an administrator at $107 per hour plus 8 burden hour for a medical director/physician at $203 per hour plus 8 burden hours for a nurse manager at $107) × 6,898 dialysis facilities × 50 percent) as shown in Table 9.

TABLE 9—COST SAVINGS FOR ANNUAL REVIEW OF EMERGENCY PREPAREDNESS PLAN

Provider/supplier	Cost savings per provider/supplier	Combined total savings
RNHCIs	$538	$9,684 for 18 RNHCIs.
ASCs	1,126	$6,257,182 for 5,557 ASCs.
Hospices	1,318	$5,916,502 for 4,489 hospice facilities both inpatient and freestanding/home based.
PRTFs	1,524	$569,976 for 374 PRTFs.
PACEs	996	$232,068 for 233 PACEs.
Hospitals	2,426	$11,700,598 for 4,823 hospitals.
ICFs/IIDs	570	$3,475,290 for 6,097 ICF/IIDs.
HHAs	1,308	$16,512,192 for 12,624 HHAs.
CORFs	768	$144,384 for 188 CORFs.
CAHs	1,252	$1,693,956 for 1,353 CAHs.
Organizations	598	$1,241,448 for 2,076 Organizations.
CMHCs	932	$150,052 for 161 CMHCs.
OPOs	2,096	$121,568 for 58 OPOs.
RHCs/FQHCs	840	$10,108,560 for RHCs and FQHCs ($3,494,400 for 4,160 RHCs and $6,614,160 for 7,874 FQHCs).
ESRD Facilities	1,668	$11,505,864 for 6,898 dialysis facilities.

b. Contents of the Emergency Plan

At § 482.15(a)(4) for hospitals, and other parallel citations for the facilities mentioned in section II.J.2 of the rule, we are finalizing our proposal to eliminate the requirement that facilities document efforts to contact local, tribal, regional, State, and Federal emergency preparedness officials and that facilities document participation in collaborative and cooperative planning efforts (OMB control number 0938–1325). We estimate that an administrator, or in the case of a hospital a community relations manager, a program director for a PACE, or a QAPI director for OPOs, would take 1 hour to document efforts to contact local, tribal, regional, State and Federal emergency preparedness officials and, when applicable, document the facility's participation in collaborative and cooperative planning efforts. We note that The Joint Commission (TJC)-accredited ASCs, TJC-accredited CAHs, and TJC-accredited hospitals have emergency preparedness requirements for developing an emergency preparedness plan that are comparable to the current emergency preparedness CoPs (81 FR 63937, 63954, and 63978 through 63979). Utilizing the same assumptions we used in the Emergency Preparedness final rule (81 FR 63937, 63954, and 63978 through 63979), we estimate that cost savings will accumulate from non-TJC accredited ASC, CAHs, and hospitals, since TJC-accredited ASCs, CAHs and hospitals are already required by the TJC to develop emergency preparedness plans. As a result, these facilities are excluded from the analysis given the requirements of their accreditation organization standards. Based on May 2017 BLS salary data, we calculate an hourly mean wage of $107 for an administrator, a PACE Program Director, or QAPI director and a cost savings of $107 per facility for RNHCIs, non-TJC accredited ASCs, hospices (both inpatient and freestanding), PRTFs, PACEs, LTCFs, ICF/IIDs, HHAs, CORFs, non-TJC accredited CAHs, Organizations, CMHCs, OPOs, RHC/FQHCs, and dialysis facilities ($107 hourly mean wage × 1 burden hour). For non-TJC accredited hospitals, we estimate an hourly mean wage of $115 for a community relations manager, and a $115 cost per facility ($115 × 1 hour). Therefore, we estimate the following for each facility affected by the proposed change, for a total savings of $7,316,489 and 68,275 burden hours. We list a summary of the calculation for savings accrued by removing this requirement for each facility in Table 10, based on facility numbers available as of May 2017.

TABLE 10—COST SAVINGS: DOCUMENTATION OF THE FACILITY'S PARTICIPATION IN COLLABORATIVE AND COOPERATIVE PLANNING EFFORTS

Provider/supplier	Cost savings per provider/supplier	Combined total savings
RNHCIs	$107	$1,926 for 18 RNHCIs.
ASCs (Non-TJC accredited).	107	$532,325 for 4,975 non-TJC accredited ASCs.
Hospices	107	$480,323 for 4,489 hospice facilities both inpatient and freestanding/home based.
PRTFs	107	$40,018 for 374 PRTFs.
PACEs	107	$24,931 for 233 PACEs.
Hospitals (Non-TJC accredited).	115	$159,045 for 1,383 non-TJC accredited hospitals.

TABLE 10—COST SAVINGS: DOCUMENTATION OF THE FACILITY'S PARTICIPATION IN COLLABORATIVE AND COOPERATIVE PLANNING EFFORTS—Continued

Provider/supplier	Cost savings per provider/supplier	Combined total savings
LTCFs	107	$1,675,941 for 15,663 LTCFs.
ICFs/IIDs	107	$652,379 for 6,097 ICF/IIDs.
HHAs	107	$1,350,768 for 12,624 HHAs.
CORFs	107	$20,116 for 188 CORFs.
CAHs (Non-TJC accredited).	107	$107,428 for 1,004 non-TJC accredited CAHs.
Organizations	107	$222,132 for 2,076 Organizations.
CMHCs	107	$17,227 for 161 CMHCs.
OPOs	107	$6,206 for 58 OPOs.
RHCs/FQHCs	107	$1,287,638 for RHCs and FQHCs ($445,120 for 4,160 RHCs and $842,518 for 7,874 FQHCs).
ESRD Facilities	107	$738,086 for 6,898 dialysis facilities.

c. Training

At § 482.15(d)(1)(ii) for hospitals, and other parallel citations for other facilities mentioned in section II.J.2 of the rule, we are finalizing our proposal to require that facilities provide training biennially, or every 2 years, after facilities conduct initial training on their emergency program, as well as requiring additional training when the emergency plan is significantly updated. However, we are withdrawing this proposal for LTC facilities only. We are maintaining the requirement that providers and suppliers develop a well-organized, effective training program that includes initial training for new and existing staff in emergency preparedness policies and procedures and would require training when the emergency plan is significantly updated. Facilities will have the flexibility to determine what is considered a significant update to the emergency plan.

For our analysis, we estimate that reducing this requirement from annually to biennially will reduce compliance costs related to providing emergency preparedness training by 50 percent (OMB control number 0938–1325). The methodology used for our cost estimate analysis mirrors the methodology used for the annual training requirement in the Emergency Preparedness final rule (81 FR 63930) with a 50 percent reduction in the cost estimate calculation. As in the Emergency Preparedness final rule (81 FR 63930), we assume that the individuals involved in the development and provision of training include an administrator, director of nursing, a RN, and an office manager, depending on the facility type. Providers and suppliers are expected to provide initial training in emergency preparedness policies and procedures to all new and existing staff, individuals providing services under arrangement, and volunteers, consistent with their expected roles, and maintain documentation of the training. Based on May 2017 BLS salary data, we calculated the hourly mean wage for each position for this requirement identified in the Emergency Preparedness final rule (81 FR 63930). We estimate that the proposed change will accrue annualized cost savings of $25,593,781 and 288,266 burden hours, or biennial savings of double these amounts. We list a detailed calculation for each facility below, based on facility numbers available as of May 2017 with a summary of these calculations provided in Table 11:

- *RNHCIs:* Combined total savings of $3,906 for 18 RNHCIs ((2 burden hours for an administrator at $107 plus 5 burden hours for a director of nursing at $44 per hour) × 18 RNHCIs × 50 percent).
- *ASCs:* Combined total savings of $1,289,224 for 5,557 ASCs ((1 burden hour for an administrator at $109 per hour plus 5 burden hours for a quality improvement RN at $71 per hour) × 5,557 ASCs × 50 percent).
- *Hospices:* Combined total savings of $956,157 for 4,489 hospice facilities (6 burden hours for a RN at $71 per hour × 4,489 hospices × 50 percent).
- *PRTFs:* Combined total savings of $132,770 for 374 PRTFs (10 burden hours for a RN at $71 per hour × 374 PRTFs × 50 percent).
- *PACE:* Combined total savings of $99,258 for 233 PACE organizations (3 burden hours for a home care coordinator at $71 per hour plus 9 burden hours for a RN at $71 per hour × 233 PACE organizations × 50 percent).
- *Hospitals:* As we stated in the Emergency Preparedness final rule (81 FR 63958), TJC-accredited hospitals are required to train their staff for their assigned roles during emergencies (CAMH, Standard EC.4.16, Eps 1–2, p. EC–13e). In addition, the TJC-accredited hospitals also must provide on-going training to their staff, including training on specific job-related safety (CAMH, Standard HR–2.30, EP 4, CAMH Refreshed Core, January 2008, p. HR–11), and we expect that emergency preparedness is part of such on-going training. As a result, we estimate a combined total savings of $2,066,202 for 1,383 non-TJC accredited hospitals (2 burden hours for an administrator at $109 per hour plus 6 burden hours for a risk management director at $107 per hour plus 28 hours for a healthcare trainer (RN) at $71 per hour plus 4 burden hours for a medical secretary at $35 per hour × 1,383 hospitals × 50 percent).
- *ICF/IID:* Combined total savings $1,734,597 for 6,097 ICF/IIDs (2 burden hours for an administrator at $107 per hour plus 5 burden hours for a RN $71 per hour × 6,097 ICF/IIDs × 50 percent).
- *HHA:* Combined total savings of $8,066,736 for 12,624 HHAs (2 burden hours for an administrator at $107 per hour plus 2 burden hours for a nursing director at $107 per hour plus 2 burden hours for a director of rehab at $85 per hour plus 2 burden hours for an office manager at $56 per hour plus 8 burden hours for a director of training at $71 × 12,624 HHAs × 50 percent).
- *CORF:* Combined total savings of $74,260 for 188 CORFs (5 burden hours for an administrator at $107 per hour plus 3 burden hours for a physical therapist at $85 per hour × 188 CORFs × 50 percent).
- *CAH:* Combined total savings of $997,161 for 1,353 CAHs (2 burden hours for an administrator at $107 per hour plus 9 burden hours for a director of nursing at $107 per hour plus 3 burden hours for a facility director at $99 per hour × 1,353 CAHs × 50 percent).
- *Organizations:* Combined total savings of $842,856 for 2,076 Organizations (6 burden hours for an administrator at $107 per hour plus 2 burden hours for a physical therapist at

$85 per hour × 2,076 Organizations × 50 percent).

• *CMHCs:* Combined total savings of $57,155 for 161 CMHCs (10 burden hours for a psychiatric RN at $71 per hour × 161 CMHCs × 50 percent).

• *OPOs:* Combined total savings of $113,448 for 58 OPOs (2 burden hours for a director at $115 per hour plus 2 burden hours for a medical director/physician at $203 per hour plus 12 burden hours for a QAPI director at $107 per hour plus 8 hours for an organ procurement coordinator at $107 per hour plus 16 burden hours for an education coordinator at $71 per hour × 58 OPOs × 50 percent).

• *RHC/FQHC:* Combined total savings of $6,245,646 ((2 burden hours for an administrator at $107 per hour plus 8 burden hours for a nurse practitioner/physician assistant at $103 per hour × 4,160 RHCs × 50 percent) $2,159,040 + (2 burden hours for an administrator at $107 per hour plus 8 burden hours for a nurse practitioner/physician assistant at $103 per hour × 7,874 FQHCs × 50 percent) $4,086,606).

• *ESRD Facilities:* Combined total savings of $2,914,405 for 6,898 dialysis facilities (3 burden hours for an administrator at $107 per hour plus 1 burden hour for a medical director/physician at $203 per hour plus 3 burden hours for a nurse manager at $107 × 6,898 dialysis facilities × 50 percent).

TABLE 11—COST SAVINGS: TRAINING

Provider/supplier	Cost savings per provider/supplier	Combined total savings
RNHCIs	$217	$3,906 for 18 RNHCIs.
ASCs	232	$1,289,224 for 5,557 ASCs.
Hospices	213	$956,157 for 4,489 hospice facilities both inpatient and freestanding/home based.
PRTFs	355	$132,770 for 374 PRTFs.
PACEs	426	$99,258 for 233 PACE organizations.
Hospitals (Non-TJC accredited).	1,494	$2,066,202 for 1,383 non-TJC accredited hospitals.
ICFs/IIDs	285	$1,734,597 for 6,097 ICF/IIDs.
HHAs	639	$8,066,736 for 12,624 HHAs.
CORFs	395	$74,260 for 188 CORFs.
CAHs	737	$997,161 for 1,353 CAHs.
Organizations	406	$842,856 for 2,076 Organizations.
CMHCs	355	$57,155 for 161 CMHCs.
OPOs	1,956	$113,448 for 58 OPOs.
RHCs/FQHCs	519	$6,245,646 for RHCs and FQHCs ($2,159,040 for 4,160 RHCs and $4,086,606 for 7,874 FQHCs).
ESRD Facilities	423	$2,914,405 for 6,898 dialysis facilities.

d. Testing

Finally, at § 482.15(d)(2), we are finalizing our proposal to require that providers of inpatient services mentioned in section II.J.2 of the rule conduct two testing exercises annually, one of which may be an exercise of their choice that must be either a community-based full-scale exercise (if available), an individual facility-based functional exercise, a drill, a tabletop exercise or workshop that includes a group discussion led by a facilitator. Given that these providers are currently required to conduct two testing exercises annually, and because they may choose to conduct the same types of testing exercises, we do not anticipate that this requirement will impose a burden upon providers of inpatient services and as such, this revision will not result in a savings of burden hours or dollars (OMB control number 0938–1325).

We are also finalizing our proposal to require that providers of outpatient services mentioned in section II.J.2 of the rule conduct one testing exercise annually which must be either a community-based full-scale exercise (if available) or an individual facility-based functional exercise every other year, and in the opposite years, may be either a community-based full-scale exercise (if available), a facility-based functional exercise, a drill, or a tabletop exercise or workshop that includes a group discussion led by a facilitator.

For our analysis, we estimate that reducing this requirement from biannually to annually for outpatient providers will reduce compliance costs related to conducting emergency preparedness testing by 50 percent. The methodology used for our cost estimate analysis mirrors the methodology used for the biannual testing requirement in the Emergency Preparedness final rule (81 FR 63930) with a 50 percent reduction in the cost estimate calculation. As in the Emergency Preparedness final rule (81 FR 63930), we will assume that the same individuals involved with developing training would typically also develop the scenarios, materials, as well as any accompanying documentation associated with testing exercises. Based on May 2017 BLS salary data, we calculated the hourly mean wage for each position for this requirement identified in the Emergency Preparedness final rule (81 FR 63930) and decreased the cost by 50 percent due to the 50 percent reduction in the frequency requirement.

We estimate that the proposed change will accrue a total annual cost savings of $9,296,423 and 100,969 burden hours. We list a detailed calculation for each facility below, based on facility numbers available as of May 2017 with a summary of these calculations provided in Table 12:

• *ASCs:* Combined total savings of $1,091,951 for 5,557 ASCs ((1 burden hour for an administrator at $109 per hour plus 4 burden hours for a quality improvement RN at $71 per hour) × 5,557 ASCs × 50 percent).

• *Freestanding/home-based hospices:* Combined total savings of $573,680 for 4,040 hospice facilities (4 burden hours for a RN at $71 per hour × 4,040 hospices × 50 percent).

• *PACE:* Combined total savings of $41,358 for 233 PACE organizations (4 burden hours for a home care coordinator at $71 per hour plus 1 burden hours for a RN at $71 per hour × 233 PACE organizations × 50 percent).

• *HHA:* Combined total savings of $4,039,680 for 12,624 HHAs (1 burden hour for an administrator at $107 per hour plus 3 burden hours for a nursing

director at $107 per hour plus 1 burden hours for a director of rehab at $85 per hour plus 1 burden hour for an office manager at $56 per hour plus 1 burden hours for a director of training at $71 × 12,624 HHAs × 50 percent).

• *CORF:* Combined total savings of $56,212 for 188 CORFs (4 burden hours for an administrator at $107 per hour plus 2 burden hours for a physical therapist at $85 per hour × 188 CORFs × 50 percent).

• *Organizations:* Combined total savings of $310,362 for 2,076 organizations (2 burden hours for an administrator at $107 per hour plus 1 burden hour for a physical therapist at $85 per hour × 2,076 organizations × 50 percent).

• *CMHCs:* Combined total savings of $22,862 for 161 CMHCs (4 burden hours for a psychiatric RN at $71 per hour × 161 CMHCs × 50 percent).

• *OPOs:* Combined total savings of $13,427 for 58 OPOs (3 burden hours for a QAPI director at $107 per hour plus 2 burden hours for an education coordinator at $71 per hour × 58 OPOs × 50 percent).

• *RHC/FQHC:* Combined total savings of $3,146,891 ((2 burden hours for an administrator at $107 per hour plus 3 burden hours for a nurse practitioner/physician assistant at $103 per hour × 4,160 RHCs × 50 percent) $1,087,840 + (2 burden hours for an administrator at $107 per hour plus 3 burden hours for a nurse practitioner/physician assistant at $103 per hour × 7,874 FQHCs × 50 percent) $2,059,051).

• *ESRD:* As identified in the Emergency Preparedness final rule (81 FR 64006), the current CFCs already require dialysis facilities to evaluate their emergency preparedness plan at least annually (§ 494.60(d)(4)(ii)); thus, we expect that all dialysis facilities are already conducting some type of tests to evaluate their emergency preparedness plans. As a result, Dialysis facilities are not included in the burden calculation.

TABLE 12—COST SAVINGS: TESTING

Provider/ supplier	Cost savings per provider/supplier	Combined total savings
ASCs	$197	$1,091,951 for 5,557 ASCs.
Hospices (freestanding/ home-based).	142	$573,680 for 4,040 hospices.
PACEs	178	$41,358 for 233 PACE organizations.
HHAs	320	$4,039,680 for 12,624 HHAs.
CORFs	299	$56,212 for 188 CORFs.
Organizations	150	$310,362 for 2,076 Organizations.
CMHCs	142	$22,862 for 161 CMHCs.
OPOs	232	$13,427 for 58 OPOs.
RHCs/FQHCs	262	$3,146,891 ($1,087,840 for 4,160 RHCs and $2,059,051 for 7,874 FQHCs).

We received few comments specifically addressing our information collection cost and burden estimates. Many comments, as previously discussed, did address specific regulatory changes and with only a few exceptions, mainly related to long term care facilities, endorsed those proposals to reduce information collection burdens.

We will submit a revised information collection request to OMB to account for the burden hour and cost savings.

II. Final Rule: Fire Safety Requirements for Certain Dialysis Facilities

A. Background

1. Overview

The Life Safety Code (LSC) is a compilation of fire safety requirements for new and existing buildings, and is updated and published every 3 years by the National Fire Protection Association (NFPA), a private, nonprofit organization dedicated to reducing loss of life due to fire. The Medicare and Medicaid regulations have historically incorporated these requirements by reference, along with Secretarial waiver authority. The statutory basis for incorporating NFPA's LSC into the regulations we apply to Medicare and, as applicable, Medicaid providers and suppliers is the Secretary of the Department of Health and Human Services' (the Secretary) authority to stipulate health, safety and other regulations for each type of Medicare and (if applicable) Medicaid-participating facility. Specifically, section 1881(b)(1)(A) of the Social Security Act (the Act) provides for payments for ''providers of services and renal dialysis facilities which meet such requirements as the Secretary shall by regulation prescribe for institutional dialysis services and supplies. . . .'' Under this statutory authority, the Secretary has set out ''Conditions for Coverage,'' including LSC compliance requirements, at 42 CFR part 494, subpart B. Our current LSC provisions are set out at § 494.60(d).

In implementing the LSC provisions, we have given ourselves the discretion to waive specific provisions of the LSC for facilities if application of our rules would result in unreasonable hardship for the facility, and if the health and safety of its patients would not be compromised by such waiver. For dialysis facilities, that authority is set out at § 494.60(d)(4). In addition, the Secretary may accept a State's fire and safety code instead of the LSC if the Centers for Medicare & Medicaid Services (CMS) determines that the protections of the State's fire and safety code are equivalent to, or more stringent than, the protections offered by the LSC; dialysis facility provisions to that effect are set out at § 494.60(d)(3). These flexibilities mitigate the potential unnecessary burdens of applying the requirements of the LSC to all affected health care facilities.

On May 12, 2012, we published a final rule in the **Federal Register**, entitled ''Medicare and Medicaid Program; Regulatory Provisions to Promote Program Efficiency, Transparency, and Burden Reduction'' (77 FR 29002). In that final rule, we limited the application of LSC requirements to dialysis facilities either located adjacent to industrial high hazard areas, and those that did not provide one or more exits to the outside at grade level from the patient treatment area level. Subsequently, we proposed to update Life Safety Code provisions for CMS providers and suppliers, ''Medicare and Medicaid Programs; Fire Safety Requirements for Certain Health Care Facilities; Proposed Rule'' (79 FR 21552, April 16, 2014). However, we inadvertently neglected to include dialysis facilities in this proposal. Therefore, we issued a proposal specifically for dialysis facilities, ''Medicare and Medicaid Programs; Fire Safety Requirements for Certain Dialysis

Facilities'' (81 FR 76899, November 4, 2016). We are finalizing these provisions now, with some modifications to the terms of the LSC to address the unique needs of dialysis facilities. The finalized update would apply only to dialysis facilities that do not provide one or more exits to the outside at grade level from the treatment area level (for instance, in upper floors of a mid-rise or high-rise building). We would not require other dialysis facilities to comply with NFPA 99® 2012 edition of the Health Care Facilities Code (NFPA 99) and NFPA 101® 2012 edition of the Life Safety Code (NFPA 101) because we believe that patients in dialysis facilities are generally capable of unhooking themselves from dialysis machines and self-evacuating without additional assistance in the event of an emergency. We believe that in all facilities with at-grade exits, patients would be able to evacuate the building in a timely fashion. Consequently, we believe that state and local requirements are sufficient to protect these patients and staff in the event of an emergency. In accordance with NFPA 101 sections 20.1.3.7 and 21.1.3.7, we would prohibit Medicare-approved dialysis facilities from being located adjacent to industrial high hazard facilities. ''Adjacent to'' is defined as sharing a wall, ceiling or floor, with a facility.

Defining ''Exit to the Outside at Grade Level From the Patient Treatment Area Level''

The phrase ''exit to the outside at grade level from the patient treatment area level'' applies to dialysis facilities that are on the ground or grade level of a building where patients do not have to traverse up or down stairways within the building to evacuate to the outside. Accessibility ramps in the exit area that provide an ease of access between the patient treatment level and the outside ground level are not considered stairways.

A dialysis facility which provides one or more exits to the outside at grade level from patient treatment level and which has a patient exit path to the outside (which may include an accessibility ramp that is compliant with NFPA and the Americans with Disabilities Act (ADA)) would be exempt from compliance with the applicable provisions of NFPA 99 and NFPA 101.

B. Provisions of the Proposed Rule and Analysis and Response to Public Comments

On November 4, 2016 we published a proposed rule to update the requirements for certain dialysis facilities (81 FR 76899) that do not provide one or more exits to the outside at grade level from the patient treatment area to comply with the 2012 edition of the NFPA 101 and NFPA 99.

We are finalizing those requirements for dialysis facilities that do not provide one or more exits to the outside at grade level from the patient treatment area level, by incorporating a reference to the 2012 edition of NFPA 101 and NFPA 99. Certified dialysis facilities without one or more exits to the outside at grade level from the patient treatment area level are already required to meet the 2000 edition of the LSC, while other provider and supplier types are required to comply with the 2012 edition of the NFPA 101 and the NFPA 99 (LSC final rule published May 4, 2016 at 81 FR 26872).

The NFPA 101® 2012 edition of the LSC provides minimum requirements, with due regard to function, for the design, operation and maintenance of buildings and structures for safety to life from fire. Its provisions also aid life safety in similar emergencies.

The NFPA 99® 2012 edition of the Health Care Facilities Code provides minimum requirements for health care facilities for the installation, inspection, testing, maintenance, performance, and safe practices for facilities, material, equipment, and appliances.

1. 2012 Edition of the Life Safety Code

The 2012 edition of the LSC includes new provisions that we believe are vital to the health and safety of all patients and staff. Our intention is to ensure that patients and staff continue to experience the highest degree of fire safety possible. We do review each edition of the NFPA 101 and NFPA 99 every 3 years to see if there are any significant provisions that we need to adopt. CMS will continue to review revisions to ensure we meet proper standards for patient safety. We have reviewed the 2015 and 2018 edition of the NFPA 101 and NFPA 99 and do not believe that there are any significant provisions that need to be addressed at this time. Newer buildings are typically built to comply with the newer versions of the LSC because state and local jurisdictions often adopt and enforce newer versions of the LSC as they become available.

We must emphasize that the LSC is not an accessibility code, and compliance with the LSC does not ensure compliance with the requirements of the ADA. State and local government programs and services, including health care facilities, are required to comply with Title II of the ADA. Private entities that operate public accommodations such as nursing homes, hospitals, and social service center establishments are required to comply with Title III of the ADA. Entities that receive federal financial assistance from the Department of Health and Human Services, including Medicare and Medicaid, are also required to comply with section 504 of the Rehabilitation Act of 1973. The same accessibility standards apply regardless of whether health care facilities are covered under Title II or Title III of the ADA or section 504 of the Rehabilitation Act of 1973.[1] For more information about the ADA's requirements, see the Department of Justice's website at *http://www.ada.gov* or call 1–800–514–0301 (voice) or 1–800–514–0383 (TTY).

2. Incorporation by Reference

This final rule will incorporate by reference the NFPA 101® 2012 edition of the LSC, issued August 11, 2011, and Tentative Interim Amendments (TIAs) issued prior to April 16, 2014; and the NFPA 99®2012 edition of the Health Care Facilities Code, issued August 11, 2011, and TIAs issued prior to April 16, 2014 in § 494.60(f).

(1) NFPA 101, Life Safety Code, 2012 edition, issued August 11, 2011;

(i) TIA 12–1 to NFPA 101, issued August 11, 2011.

(ii) TIA 12–2 to NFPA 101, issued October 30, 2012.

(iii) TIA 12–3 to NFPA 101, issued October 22, 2013.

(iv) TIA 12–4 to NFPA 101, issued October 22, 2013.

(2) NFPA 99, Standards for Health Care Facilities Code of the National Fire Protection Association 99, 2012 edition, issued August 11, 2011.

(i) TIA 12–2 to NFPA 99, issued August 11, 2011.

(ii) TIA 12–3 to NFPA 99, issued August 9, 2012.

(iii) TIA 12–4 to NFPA 99, issued March 7, 2013.

(iv) TIA 12–5 to NFPA 99, issued August 1, 2013.

(v) TIA 12–6 to NFPA 99, issued March 3, 2014.

These materials have been previously incorporated by reference for other

[1] Facilities newly constructed or altered after March 15, 2012 must comply with the 2010 Standards for Accessible Design (2010 Standards). Facilities newly constructed or altered between September 15, 2010 and March 15, 2012 had the option of complying with either the 1991 Standards for Accessible Design (1991 Standards) or the 2010 Standards. Facilities newly constructed between January 26, 1993 and September 15, 2010, or altered between January 26, 1992 and September 15, 2010 were required to comply with the 1991 Standards under Title III and either the 1991 Standards or the Uniform Federal Accessibility Standards under Title II.

provider and supplier types by the final rule, ''Medicare and Medicaid Programs; Fire Safety Requirements for Certain Health Care Facilities'' published on May 4, 2016 (81 FR 26872).

The materials that are incorporated by reference can be found for interested parties and are available for inspection at the CMS Information Resource Center, 7500 Security Boulevard, Baltimore, MD 21244, or from the National Fire Protection Association, 1 Batterymarch Park, Quincy, MA 02269. If any changes to these editions of the Codes are incorporated by reference, CMS will publish a document in the **Federal Register** to announce those changes.

The 2012 edition of the NFPA 101 (including the TIAs) provides minimum requirements, with due regard to function, for the design, operation and maintenance of buildings and structures for safety to life from fire. Its provisions also aid life safety in similar emergencies.

The 2012 edition of the NFPA 99 (including the TIAs) provides minimum requirements for health care facilities for the installation, inspection, testing, maintenance, performance, and safe practices for facilities, material, equipment, and appliances, including other hazards associated with the primary hazards.

3. Ambulatory Health Care Occupancies

According to our memorandum, ''Survey & Certification: 13–47–LSC/ESRD,'' issued July 12, 2013, dialysis facilities that are subject to the LSC provisions must meet the requirements of the Ambulatory Health Care Occupancy chapters 20 and 21 of the LSC. Dialysis facilities that are not subject to our LSC regulations must continue to meet State and local fire codes. (See *https://www.cms.gov/Medicare/Provider-Enrollment-and-Certification/SurveyCertificationGenInfo/Downloads/Survey-and-Cert-Letter-13-47.pdf.*)

The following are key provisions in the 2012 edition of the LSC from Chapter 20, ''New Ambulatory Health Care Occupancies'' and Chapter 21, ''Existing Ambulatory Health Care Occupancies.'' We have provided the LSC citation and a description of the requirement.

The 2012 edition of the LSC defines an ''Ambulatory Health Care Occupancy'' as a facility capable of treating 4 or more patients simultaneously on an outpatient basis. We believe that dialysis facilities that do not provide one or more exits to the outside at grade level from the patient treatment area should also be required to meet the provisions applicable to Ambulatory Health Care Occupancy Chapters, regardless of the number of patients served, as a matter of health and safety of patients receiving services in these facilities. In the burden reduction final rule, published in the **Federal Register** on May 12, 2012 entitled, ''Medicare and Medicaid Program; Regulatory Provisions to Promote Program Efficiency, Transparency, and Burden Reduction'' (77 FR 29002), we removed the provision's applicability to dialysis facilities with at-grade exits directly from the treatment area because, in our view, there was, and continues to be, an extremely low risk of fire in dialysis facilities. Medicare-approved dialysis facilities that provide exits to the outside at grade level would continue to be required to follow State and local fire codes, which we believe provide for sufficient patient protection in the event of an emergency. If a facility's exits were located above or below grade, patients would require more time to evacuate. Consequently, we believe that the LSC would still be required due to the additional risk entailed in longer exit times.

Sections 20.3.2.1 and 21.3.2.1—Doors

This provision requires all doors to hazardous areas be self-closing or close automatically.

Sections 20.3.2.6 and 21.3.2.6—Alcohol Based Hand Rubs

This provision explicitly allows aerosol dispensers, in addition to gel hand rub dispensers. The aerosol dispensers are subject to limitations on size, quantity, and location, just as gel dispensers are limited. Automatic dispensers are also now permitted in ambulatory care facilities, provided, among other things, that—(1) they do not release contents unless they are activated; (2) the activation occurs only when an object is within 4 inches of the sensing device; (3) any object placed in the activation zone and left in place must not cause more than one activation; (4) the dispenser must not dispense more than the amount required for hand hygiene consistent with the label instructions; (5) the dispenser is designed, constructed and operated in a way to minimize accidental or malicious dispensing; and (6) all dispensers are tested in accordance with the manufacturer's care and use instructions each time a new refill is installed. The provision further defines prior language regarding ''above or adjacent to an ignition source'' as being ''within 1 inch'' of the ignition source.

Sections 20.3.5 and 21.3.5—Extinguishment Requirements

This provision is related to sprinkler system requirements and requires the evacuation of a building or the instituting of an approved fire watch when a sprinkler system is out of service for more than 10 hours in a 24-hour period until the system has been returned to service. A facility must evacuate the building or portion of the building affected by the system outage until the system is back in service, or establish a fire watch until the system is back in service.

4. 2012 Edition of the Health Care Facilities Code

The 2012 edition of the NFPA 99, ''Health Care Facilities Code,'' addresses requirements for both health care occupancies and ambulatory care occupancies, and serves as a resource for those who are responsible for protecting health care facilities from fire and associated hazards. The purpose of this Code is to provide minimum requirements for the installation, inspection, testing, maintenance, performance, and safe practices for health care facility materials, equipment and appliances. This Code is a compilation of documents that have been developed over a 40-year period by NFPA, and is intended to be used by those persons involved in the design, construction, inspection, and operation of health care facilities, and in the design, manufacture, and testing of appliances and equipment used in patient care areas of health care facilities. It provides information on subjects, for example, medical gas and vacuum systems, electrical systems, electrical equipment, and gas equipment. The NFPA 99 applies specific requirements in accordance with the results of a risk-based assessment methodology. A risk-based approach allows for the application of requirements based upon the types of treatment and services being provided to patients or residents rather than the type of facility in which they are being performed. In order to ensure the minimum level of protection afforded by NFPA 99 is applicable to all patient and resident care areas within a health care facility, we proposed adoption of the 2012 edition of NFPA 99, with the exception of chapters 7—''Information Technology and Communications Systems for Health Care Facilities''; 8—''Plumbing''; 12—''Emergency Management''; and 13—''Security Management''. The first three chapters of the NFPA 99 address the administration of the NFPA 99, the

referenced publications, and definitions. Short descriptions of some of the more important provisions of NFPA 99 follow:

Chapter 4—Fundamentals

Chapter 4 provides guidance on how to apply NFPA 99 requirements to health care facilities based upon ''categories'' determined when using a risk-based methodology.

There are four categories utilized in the risk assessment methodology, depending on the types of treatment and services being provided to patients or residents. Section 4.1.1 of NFPA 99 describes Category 1 as, ''Facility systems in which failure of such equipment or system is likely to cause major injury or death of patients or caregivers. . . .'' Section A.4.1.1 provides examples of what a major injury could include, such as amputation or a burn to the eye. Section 4.1.2 describes Category 2 as, ''Facility systems in which failure of such equipment is likely to cause minor injury to patients or caregivers. . . .'' Section A.4.1.2 describes a minor injury as one that is not serious or involving risk of life. Section 4.1.3 describes Category 3 as, ''Facility systems in which failure of such equipment is not likely to cause injury to patients or caregivers, but can cause patient discomfort. . . .'' Section 4.1.4 describes Category 4 as, ''Facility systems in which failure of such equipment would have no impact on patient care. . . .''

Section 4.2 requires that each facility that is a health care or ambulatory occupancy define its risk assessment methodology, implement the methodology, and document the results. We did not propose to require the use of any particular risk assessment procedure. However, if future situations indicate the need to define a particular risk assessment procedure, we would pursue that through a separate notice and comment rulemaking.

Chapter 5—Gas and Vacuum Systems

The hazards addressed in Chapter 5 include the ability of oxygen and nitrous oxide to exacerbate fires, safety concerns from the storage and use of pressurized gas, and the reliance upon medical gas and vacuum systems for patient care. Chapter 5 does not mandate the installation of any systems; rather, if they are installed or are required to be installed, the systems will be required to comply with NFPA 99. Chapter 5 covers the performance, maintenance, installation, and testing of the following:

- Non-flammable medical gas systems with operating pressure below a gauge pressure of 300 psi;
- Vacuum systems in health care facilities;
- Waste anesthetic gas disposal systems (WAGD); and
- Manufactured assemblies that are intended for connection to the medical gas, vacuum, or WAGD systems.

Chapter 6—Electrical Systems

The hazards addressed in Chapter 6 are related to the electrical power distribution systems in health care facilities, and address issues such as electrical shock, power continuity, fire, electrocution, and explosions that might be caused by faults in the electrical system. Chapter 6 also covers the performance, maintenance, and testing of the electrical systems in health care facilities.

Chapter 9—Heating, Ventilation, and Air Conditioning (HVAC)

Chapter 9 requires HVAC systems serving spaces or providing health care functions to be in accordance with the American Society of Heating, Refrigeration and Air-Conditioning Engineers (ASHRAE) Standard 170—Ventilation of Health Care Facilities (2008 edition) (*http://www.ashrae.org*).

Chapter 9 does not apply to existing HVAC systems, but applies to the construction of new health care facilities, and the altered, renovated, or modernized portions of existing systems or individual components. Chapter 9 ensures minimum levels of heating, ventilation and air conditioning performance in patient and resident care areas. Some of the issues discussed in Chapter 9 are as follows:

- HVAC system energy conservation;
- Commissioning;
- Piping;
- Ductwork;
- Acoustics;
- Requirements for the ventilation of medical gas storage and trans-filling areas;
- Waste anesthetic gases;
- Plumes from medical procedures;
- Emergency power system rooms; and
- Ventilation during construction.

Chapter 10—Electrical Equipment

Chapter 10 covers the performance, maintenance, and testing of electrical equipment in health care facilities. Much of this chapter applies to requirements for portable electrical equipment in health care facilities, but there are also requirements for fixed-equipment and information on administrative issues.

Chapter 11—Gas Equipment

The hazards addressed in Chapter 11 relate to general fire, explosions, and mechanical issues associated with gas equipment, including compressed gas cylinders.

Chapter 14—Hyperbaric Facilities

Chapter 14 addresses the hazards associated with hyperbaric facilities in health care facilities, including electrical, explosive, implosive, as well as fire hazards. Chapter 14 sets forth minimum safeguards for the protection of patients and personnel administering hyperbaric therapy and procedures. Chapter 14 contains requirements for hyperbaric chamber manufacturers, hyperbaric facility designers, and personnel operating hyperbaric facilities. It also contains requirements related to construction of the hyperbaric chamber itself and the equipment used for supporting the hyperbaric chamber, as well as administration and maintenance. Many requirements in this chapter are applicable only to new construction and new facilities.

Chapter 15—Features of Fire Protection

Chapter 15 covers the performance, maintenance, and testing of fire protection equipment in health care facilities. Issues addressed in this chapter range from the use of flammable liquids in an operating room to special sprinkler protection. These fire protection requirements are independent of the risk-based approach, as they are applicable to all patient care areas in both new and existing facilities.

Chapter 15 has several sections taken directly from the NFPA 101, including requirements for the following:

- Construction and compartmentalization of health care facilities.
- Laboratories.
- Utilities.
- Heating, ventilation and air conditioning systems.
- Elevators.
- Escalators.
- Conveyors.
- Rubbish Chutes.
- Incinerators.
- Laundry Chutes.
- Fire detection, alarm and communication systems.
- Automatic sprinklers and other extinguishing equipment.
- Compact storage including mobile storage and maintenance.
- Testing of water based fire protection systems.

These sections have requirements for inspection, testing and maintenance which apply to all facilities, as well as

specific requirements for existing systems and equipment that also apply to all facilities.

• The prospective timeline for applicability of these requirements would be 60 days after the publication of the final rule in the **Federal Register**. We solicited comments on the proposal of the adoption of the 2012 NFPA 101 and the 2012 NFPA 99 for dialysis facilities that do not provide one or more exits to the outside at grade level from the treatment area level in the proposed rule ''Fire Safety Requirements for Certain Dialysis Facilities,'' published November, 4, 2016 (81 FR 76899).

We received 4 comments and all commenters were in support of the proposal. Therefore, we are finalizing the adoption of the 2012 NFPA 101 and the 2012 NFPA 99 for dialysis facilities that do not provide one or more exits to the outside at grade level from the treatment area level.

Technical Correction

We inadvertently left out the update of § 494.60(d)(2) from the 2000 edition of the Life Safety Code to the 2012 edition of the Life Safety Code. This update goes along with the overall adoption of the 2012 edition of the Life Safety Code. This will have no impact on facilities as they are all already meeting the 2012 edition of the Life Safety Code in accordance with state and local requirements.

C. Collection of Information Requirements

This document does not impose information collection requirements, that is, reporting, recordkeeping or third-party disclosure requirements. Consequently, there is no need for review by the Office of Management and Budget under the authority of the Paperwork Reduction Act of 1995 (44 U.S.C. 3501 *et seq.*).

III. Final Rule: Hospital and Critical Access Hospital (CAH) Changes To Promote Innovation, Flexibility, and Improvement in Patient Care

A. Background

On June 16, 2016, we published a proposed rule in the **Federal Register**, ''Medicare and Medicaid Programs; Hospital and Critical Access Hospital (CAH) Changes To Promote Innovation, Flexibility, and Improvement in Patient Care'' (81 FR 39447), to revise a number of hospital and CAH requirements, including those focused on infection control, antibiotic use, and antidiscrimination. We are now finalizing several of the proposed changes in order to modernize the hospital and critical access hospital (CAH) requirements, improve quality of care, and support HHS and CMS priorities. We believe that benefits of these finalized requirements will include: Reduced incidence of hospital-acquired conditions (HACs), including reduced incidence of healthcare-associated infections (HAIs); reduced inappropriate antibiotic use; reduced regulatory burden and increased cost savings for hospitals, CAHs, and insurers; and strengthened patient protections overall. Specifically, we proposed to revise the conditions of participation (CoPs) for hospitals and CAHs to address:

• Discriminatory behavior by healthcare providers that may create real or perceived barriers to care;

• A requirement regarding a patient's right to access his or her own medical records, including in an electronic format;

• Continued use of the term ''Licensed Independent Practitioners'' (LIPs), which might inadvertently exacerbate workforce shortage concerns, might unnecessarily impose regulatory burden on hospitals by restricting a hospital's ability to allow non-physician practitioners such as physician assistants (PAs) to operate within the scope of practice allowed by state law, and does not recognize the benefits to patient care that might be derived from fully utilizing PAs and their clinical skills to the highest levels of their training, education, and experience as allowed by hospital policy in accordance with state law;

• The use of quality reporting program data by hospital Quality Assessment and Performance Improvement (QAPI) programs;

• Requirements in the Nursing services CoP to improve clarity and provide some regulatory flexibility and burden relief;

• Requirements in the Medical records services CoP to improve clarity regarding the distinctions between a patient's inpatient and outpatient status and the subtle differences between certain aspects of medical record documentation related to each status;

• Requirements that do not fully conform to current standards for infection control for both hospitals and CAHs;

• Requirements for antibiotic stewardship programs to help reduce inappropriate antibiotic use and antimicrobial resistance for both hospitals and CAHs;

• A requirement for CAHs that would allow a patient's nutritional needs to be met in accordance with recognized dietary practices and the orders of the practitioner responsible for the care of the patients, or by a qualified dietician or qualified nutrition professional as authorized by the medical staff in accordance with State law; and

• Requirements for CAHs to establish a quality assessment and performance improvement program (QAPI).

B. Provisions of the Proposed Regulations and Responses to Public Comments for Hospitals (42 CFR Part 482)

1. General Comments

In response to the proposed rule, we received 200 public comments. Commenters included individuals, healthcare professionals and corporations, national associations and coalitions, state health departments, patient advocacy organizations, and individual facilities that would be impacted by the regulation.

Generally, most comments expressed support for the regulatory changes. We have provided a summary of the public comments, our responses to those comments, and any changes made as a result of those comments in the proceeding sections. Several commenters expressed concern that we underestimated the time and effort required for compliance with the antibiotic stewardship and QAPI requirements, especially for smaller hospitals, including CAHs. Commenters requested a delayed implementation for these requirements.

2. Implementation Timeframe

Comment: We received several comments stating that we have underestimated the time necessary to implement some of the requirements contained in this rule. Some commenters stated that the proposed hospital and CAH infection control and antibiotic stewardship and QAPI provisions required additional time to implement. These commenters requested that we grant additional time for the implementation for these requirements. Commenters cited challenges associated with implementing these requirements, especially for small, rural hospitals and CAHs including obtaining and training appropriate staff for the required positions.

Response: We understand the complexities of the required changes in this rule for hospitals and CAHs, particularly the effects on CAHs and small, rural hospitals. As a result, we are using the following implementation schedule for the provisions of this final rule:

- CAH QAPI requirements—an implementation date that is 18 months after the effective date of this final rule;
- Hospital and CAH compliance with the antibiotic stewardship requirements—an implementation date that is six months from the effective date of this final rule; and
- All other requirements, including those for patient's rights—an implementation date that is 60 days from the publication of this final rule.

3. Non-Discrimination

We proposed to establish at § 482.13(i) for hospitals and § 485.635 (g) for CAHs, explicit requirements that a hospital (or CAH) not discriminate on the basis of race, color, religion, national origin, sex (including gender identity), sexual orientation, age, or disability and that the hospital (or CAH) establish and implement a written policy prohibiting discrimination on the basis of race, color, religion, national origin, sex (including gender identity), sexual orientation, age, or disability.

We proposed to further require that each patient, (and/or support person, where appropriate), is informed, in a language he or she can understand, of the right to be free from discrimination against them on any of these bases when he or she is informed of his or her other rights under § 482.13(i) (or § 485.635(g)). In addition, we proposed to require that the hospital (or CAH) inform the patient and/or representative, and/or support person, on how he or she can seek assistance if they encounter discrimination.

Comment: We received numerous comments that expressed support for this proposal and also discussed the potential benefits of the proposal to patients. In addition, we received comments that expressed concern about the consequences of the implementation of this proposal and suggested modifications to our proposed requirement. Commenters also discussed potential technical difficulties that may exist when implementing this proposal and they expressed concern that the proposed requirement may be duplicative of other current federal requirements.

Response: In response to these comments, we are not finalizing the proposal to require explicit non-discrimination requirements in the CoPs and we are instead deferring to the non-discrimination requirements of Section 1557 of the Affordable Care Act.

Final Action: We are not finalizing proposed § 482.13(i) and § 485.635(g).

4. Licensed Independent Practitioner

We proposed to delete the modifying term ''independent'' from the CoPs at § 482.13(e)(5), as well as at § 482.13(e)(8)(ii), and also proposed to revise the provision to be in keeping with the language of the Children's Health Act of 2000 (Pub. L. 106–310) (CHA) regarding restraint and seclusion orders and licensed practitioners. Therefore, we proposed that § 482.13(e)(5) read that the use of restraint or seclusion must be in accordance with the order of a physician or other licensed practitioner who is responsible for the care of the patient and authorized to order restraint or seclusion by hospital policy in accordance with State law. We proposed that § 482.13(e)(8)(ii) would state that, after 24 hours, before writing a new order for the use of restraint or seclusion for the management of violent or self-destructive behavior, a physician or other licensed practitioner who is responsible for the care of the patient and authorized to order restraint or seclusion by hospital policy in accordance with State law would have to see and assess the patient.

We proposed to revise the provisions in sections § 482.13(e)(10), § 482.13(e)(11), § 482.13(e)(12)(i)(A), § 482.13(e)(14), and § 482.13(g)(4)(ii) that contain the term ''licensed independent practitioner'' by changing the term from ''licensed independent practitioner'' to simply ''licensed practitioner.'' We also proposed to remove the term ''physician assistant'' from the current provisions at § 482.13(e)(12)(i)(B) and § 482.13(e)(14).

Comment: The majority of commenters were supportive of this change. Specifically, commenters noted that the proposed language change will remove uncertainty regarding these provisions and clearly demonstrates that Physician Assistants (PAs) are authorized to order restraint and seclusion, in accordance with state law and facility policy, when medically necessary to protect patients and health professionals. One commenter did not support the removal of the term ''independent'' from this requirement. The commenter stated that removing the term ''independent'' may make this requirement applicable to other care providers, such as registered nurses.

Response: We thank commenters for their support of this requirement. We believe this revision reflects our goal to have health professionals operate within the scope of practice allowed by state law, and recognizes the need to fully utilize the healthcare workforce. We also believe that this change will reduce unnecessary burden for hospitals and remove obstacles PAs face when ordering seclusion and restraints. We disagree with the commenters who stated that the removal of the term ''independent'' will cause confusion over the applicability of this requirement. Our proposed removal of the term ''independent'' is consistent with the language used in the CHA, which utilizes the term ''other licensed practitioner'', without the independent modifying term. In addition, the order of restraint or seclusion must be ordered by a licensed practitioner who is authorized by hospital policy in accordance with State law to do so. This would exclude Registered Nurses or other hospital staff, who either through State law or hospital policy, would not have the authorization to order the use of restraints and seclusion.

After consideration of the comments we received, we are finalizing this proposal, without modification.

Final Action: We are finalizing the following revisions to § 482.13:

1. Remove the modifying term ''independent'' from the CoPs at § 482.13(e)(5) and § 482.13(e)(8)(ii).
2. Revise § 482.13(e)(5) to state that the use of restraint or seclusion must be in accordance with the order of a physician or other licensed practitioner who is responsible for the care of the patient and authorized to order restraint or seclusion by hospital policy in accordance with State law.
3. Revise the provisions in sections § 482.13(e)(10), § 482.13(e)(11), § 482.13(e)(12)(i)(A), § 482.13(e)(14), and § 482.13(g)(4)(ii) that contain the term ''licensed independent practitioner'' by changing the term to simply ''licensed practitioner.''
4. Remove the term ''physician assistant'' from the current provisions at § 482.13(e)(12)(i)(B) and § 482.13(e)(14).

5. Quality Assessment and Performance Improvement (QAPI) Program (§ 482.21)

We proposed a minor change to the program data requirements at § 482.21(b), which would require that the hospital QAPI program incorporate quality indicator data including patient care data submitted to or received from quality reporting and quality performance programs, including but not limited to data related to hospital readmissions and hospital-acquired conditions

Comment: We received mostly positive feedback regarding this requirement; however, some commenters asked that we remove the provided example of ''data related to hospital readmissions and hospital-acquired conditions.'' Commenters

believed that the inclusion of this information makes it unclear to hospitals that they should utilize all data available to them. One commenter also disagreed with any proposal that would restrict quality improvement work to a limited number of areas.

Response: We thank the commenters for their feedback. We believe that this requirement affords hospitals increased flexibility, while continuing to promote patient safety and quality of care. As revised by this final rule, the regulation at § 482.21(b)(1) now requires that the QAPI program ''incorporate quality indicator data including patient care data, and other relevant data such as data submitted to or received from Medicare quality reporting and quality performance programs, including but not limited to data related to hospital readmissions and hospital-acquired conditions.'' We believe the intent of the regulation is clear as the language states that the data that must be incorporated is not limited to data related to hospital readmissions and hospital-acquired conditions; however, we will ensure that the intent is also clear in the Interpretive Guidelines for this requirement. Note that CMS historically releases Interpretive Guidelines for new regulations after the final rule has been published. Furthermore, we note that these requirements would not restrict hospitals to a certain number of quality improvement areas, but they are instead minimum requirements that hospitals can choose to exceed as they strive to improve the quality of the services that they provide.

Final Action: We are finalizing § 482.21(b) as proposed.

6. Nursing Services (482.23)

As a result of our internal review of the CoPs for nursing services, we recognized that some of our requirements might be ambiguous and confusing due to unnecessary distinctions between inpatient and outpatient services, or might fail to account for the variety of ways through which a hospital might meet its nurse staffing requirements. We proposed to make revisions to the nursing services CoP to improve clarity. Specifically, we proposed to revise § 482.23(b), which currently states that there must be supervisory and staff personnel for each department or nursing unit to ensure, when needed, the immediate availability of a registered nurse for bedside care of any patient. We proposed to delete the term ''bedside,'' which might imply only inpatient services to some readers. The nursing service would have to ensure that patient needs were being met by ongoing assessments of patients' needs and would have to provide nursing staff to meet those needs regardless of whether the patient was an inpatient or an outpatient. There would have to be sufficient numbers and types of supervisory and staff nursing personnel to respond to the appropriate nursing needs and care of the patient population of each department or nursing unit. When needed, a registered nurse would have to be available to care for any patient. We understand that the term ''immediate availability'' has been interpreted to mean physically present on the unit or in the department. We further understand that there are some outpatient services where it might not be necessary to have a registered nurse physically present. For example, while it is clearly necessary to have an RN present in an outpatient ambulatory surgery recovery unit, it might not be necessary to have an RN on-site at a hospital MRI facility that is outside the hospital building, but still on the hospital campus. We proposed to allow a hospital to establish a policy that would specify which, if any, outpatient departments would not be required to have an RN physically present as well as the alternative staffing plans that would be established under such a policy. We would require such a policy to take into account factors such as the services delivered, the acuity of patients typically served by the facility, and the established standards of practice for such services. In addition, we would propose that the policy must be approved by the medical staff and be reviewed at least once every three years. We solicited comments on the need for, the risks of establishing, and the appropriate criteria we should require for such an exception.

We also proposed to clarify in (b)(4) (which currently requires that the hospital must ensure that the nursing staff develops, and keeps current, a nursing care plan for each patient and that the plan may be part of an interdisciplinary care plan) that while a nursing care plan was needed for every patient, the care plan would be expected to reflect the needs of the patient and the nursing care to be provided to meet those needs. The care plan for a patient with complex medical needs and a longer anticipated hospitalization would be more extensive and detailed than the care plan for a patient with a less complex medical need expecting only a brief hospital stay. We expect that a nursing care plan would be initiated and implemented in a timely manner, include patient goals as part of the patient's nursing care assessment and, as appropriate, physiological and psychosocial factors (such as specific physical limitations and available support systems), physical and behavioral health comorbidities, and patient discharge planning. In addition, it would have to be consistent with the plan for the patient's medical care and demonstrate evidence of reassessment of the patient's nursing care needs, response(s) to nursing interventions, and, as needed, revisions to the plan.

Finally, we proposed to revise (b)(6) (which currently states that non-employee licensed nurses working in the hospital must adhere to the policies and procedures of the hospital and that the director of nursing service must provide for the adequate supervision and evaluation of the clinical activities of non-employee nursing personnel) to clarify that *all* licensed nurses who provide services in the hospital must adhere to the policies and procedures of the hospital. In addition, the director of nursing service must provide for the adequate supervision and evaluation of the clinical activities of *all* nursing personnel (that is, all licensed nurses and any non-licensed personnel such as nurse aides, orderlies, or other nursing support personnel who are under the direction of the nursing service) which occur within the responsibility of the nursing service, regardless of the mechanism through which those personnel were obtained. We recognize that there are a variety of arrangements under which hospitals obtain the services of licensed nurses. Mechanisms may include direct employment, the use of contract or agency nurses, a leasing agreement, volunteer services or some other arrangement. No matter how the services of a licensed nurse were obtained, in order to ensure the health and safety of patients, all nurses would have to know and adhere to the policies and procedures of the hospital and there must be adequate supervision and evaluation of the clinical activities of all nursing personnel who provide services that occur within the responsibility of the nursing service. We would expect non-licensed personnel to be supervised by a licensed nurse.

In addition, we proposed to delete inappropriate references to § 482.12(c) that are currently in (c)(1) and (3). We discuss these technical corrections in detail below.

Comment: Commenters expressed concern regarding the removal of the word ''bedside'' under § 482.23(b), (which stated that there must be supervisory and staff personnel for each department or nursing unit to ensure, when needed, the immediate availability of a registered nurse for

bedside care of any patient). Commenters noted that our proposed revision could create confusion in certain inpatient departments and asked that CMS clarify that each hospital department or nursing unit should ensure that nurse staffing should be immediately available, when needed. Commenters also asked that we clarify that policies related to nurse staffing are approved by the hospital's medical staff in conjunction with nursing leadership. One commenter stated that the approval of any policies regarding nursing services would be under the authority of the hospital's director of nursing and medical staff approval would not be needed as proposed here.

Response: The nursing service must ensure that patient needs are met by continuously assessing the needs of patients and must provide nursing staff to meet those needs, regardless of whether the patient is an inpatient or an outpatient. There must be sufficient numbers and types of supervisory and staff nursing personnel to meet the nursing needs and to care for the patient population of each department or nursing unit. A registered nurse must be available to care for any patient, as determined by the needs of the patient and hospital policy. Note that the term ''immediate availability'' has been interpreted to mean physically present on the unit or in the department. Also note that there are some outpatient services where it might not be necessary to have a registered nurse physically present. For example, while it is clearly necessary to have an RN present in an outpatient ambulatory surgery recovery unit, it might not be necessary to have an RN on-site at an off-campus outpatient department where radiology services are offered. Hospitals are provided the flexibility to establish a policy that would specify which, if any, outpatient departments would not be required to have an RN physically present as well as the alternative staffing plans that would be established under such a policy. Such a policy must take into account factors such as the services delivered, the acuity of patients typically served by the facility, and the established standards of practice for such services. We agree with the comment that stated that the approval of any nursing services policy falls under the authority of the hospital's nursing leadership and we have modified the proposed requirement at § 482.23(b)(7)(iii) to reflect that in this final rule.

Comment: We received positive comments about the requirement under § 482.23(b)(4), which requires that the nursing care plan, which is needed for every patient, reflect the needs of the patient and the nursing care to be provided to meet those needs. Commenters stated these changes help ensure that the clinical team is working together with the patient and the patient's family to ensure that the team is continuously working towards meeting the established patient goals. However, as evidenced by some comments, there appears to exist some confusion over whether a nursing care plan is required for both inpatients and outpatients or if it is required for inpatients only.

Response: We appreciate the positive feedback received for this requirement. Initiating a nursing care plan for patients that reflects the needs of the patient will lead to better patient outcomes and has the potential to decrease length of stay.

Regarding the question of which patients (all patients or only inpatients) are required to have a nursing care plan, we must look at both the regulatory text and the interpretive guidance contained in the SOM, Appendix A, Section A–0396, for this provision. While the actual regulatory text has always simply used the term, ''patient,'' implying both inpatients and outpatients, other areas of the CoPs specifically use the term ''inpatient'' as does the language of the Act (specifically with regard to nursing services) as well as other instances in the CoPs that refer to patient ''admissions,'' which further implies inpatients. Additionally, the interpretive guidance for this provision in the SOM, Appendix A, has traditionally held that the requirement for a nursing care plan only applies to patients after their ''admission,'' (that is, inpatients only) (*https://www.cms.gov/Regulations-and-Guidance/Guidance/Manuals/Downloads/som107ap_a_hospitals.pdf,* p. 224).

While we believe that nursing care plans most appropriately, and in most instances, apply only to inpatients, we urge hospitals to review their policies and procedures in this area to determine if there are outpatients where a nursing care plan would be appropriate and should be required for the benefit of the patient's health and safety and for improved outcomes. For instance, hospitals should look at the policies that they develop for the provisions that we are finalizing here, at § 482.23(b)(7), regarding those policies and procedures that must be in place to establish which outpatient departments, if any, are not required under hospital policy to have a registered nurse present. As we discussed previously, that while it is clearly necessary to have an RN present in an outpatient ambulatory surgery recovery unit, it might not be necessary to have an RN on-site at a hospital MRI facility that is outside the hospital building, but still on the hospital campus. In exercising this policy flexibility provided in this final rule for reviewing the need for establishing which outpatient units must have an RN present for patient care and safety, we likewise encourage hospitals to exercise a similar regulatory flexibility in reviewing their policies for establishing which types of outpatients would require a nursing care plan through a similar lens—that is, based on the services that a patient is receiving and the location in which he or she is receiving those services. We further believe that the example provided here regarding the requirement differences in the patient's needs for having an RN present, which clearly exist between an outpatient undergoing ambulatory surgery and one receiving an MRI or other radiologic services, is entirely relevant to the considerations for determining which patient needs a nursing care plan.

Comment: We received positive feedback regarding § 482.23(b)(6), in which we proposed to clarify that all licensed nurses who provide services in the hospital must adhere to the policies and procedures of the hospital and addresses the supervision and evaluation of the clinical activities of all nursing personnel. Commenters appreciated the clarification of the requirements in this in calling for adequate supervision and evaluation of all nursing personnel. One commenter asked that we clarify that nursing leadership is responsible for ensuring that there are clear lines of reporting and supervision.

Response: We appreciate the comments received on the proposed requirement. We expect all nursing personnel to have a clear understanding of the reporting and supervisory structure and it is the responsibility of nursing leadership to ensure that there are clear lines of reporting and supervision. This requirement must be met regardless of the employment type or status of the nursing personnel, including but not limited to those employed via direct employment, the use of contract or agency nurses, a leasing agreement, volunteer services or some other arrangement. No matter how the services of a licensed nurse are obtained, in order to ensure the health and safety of patients, all nurses must know and adhere to the policies and procedures of the hospital and there must be adequate supervision and evaluation of the clinical activities of all nursing personnel who provide services

that occur within the responsibility of the nursing service. We would expect non-licensed personnel to be supervised by a licensed nurse.

Final Decision: After consideration of the comments we received on the proposed rule, we are finalizing § 482.23 as proposed with the exception of the proposed requirement at § 482.23(b)(7)(iii), which we have revised in response to comments by replacing ''medical staff'' with ''director of nursing,'' and which we are finalizing here.

7. Medical Record Services (§ 482.24)

We proposed to revise § 482.24(c) to require that the content of the medical record contain information to justify all admissions and continued hospitalizations, support the diagnoses, describe the patient's progress and responses to medications and services, and document all inpatient stays and outpatient visits to reflect all services provided to the patient.

Similarly, we proposed to revise § 482.24(c)(4)(ii) to include ''all diagnoses specific to each inpatient stay and outpatient visit,'' which would include specifying any admitting diagnoses. At § 482.24(c)(4)(iv), we proposed to require that the content of the record include documentation of complications, hospital-acquired conditions, healthcare-associated infections, and adverse reactions to drugs and anesthesia. We also propose changes to § 482.24(c)(4)(vi) to add ''progress notes. . . interventions, responses to interventions . . .'' to the required documentation of ''practitioners' orders'' to emphasize the necessary documentation for both inpatients and outpatients. We also proposed to add the phrase ''to reflect all services provided to the patient,'' so that the entire provision would now read that the content of the record must contain all practitioners' progress notes and orders, nursing notes, reports of treatment, interventions, responses to interventions, medication records, radiology and laboratory reports, and vital signs and other information necessary to monitor the patient's condition and to reflect all services provided to the patient.

We proposed to change § 482.24(c)(4)(vii) to require that all patient medical records document discharge and transfer summaries with outcomes of all hospitalizations, disposition of cases, and provisions for follow-up care for all inpatient and outpatient visits to reflect the scope of all services received by the patient.

Finally, we proposed to revise § 482.24(c)(4)(viii) so that the content of the medical record would contain final diagnoses with completion of medical records within 30 days following all inpatient stays, and within 7 days following all outpatient visits.

Comment: The comments we received on these proposed changes were concerned that the medical records documentation revisions would be unduly burdensome and confusing regarding distinctions between the requirements for inpatients versus outpatients. Commenters also expressed concerns over the ongoing interplay between EHRs and paper-based records systems and EHR interoperability issues that may arise.

Response: We appreciate the commenter's feedback regarding these proposals. We agree that the proposed changes to the medical records documentation requirements would impose an additional undue burden on hospitals and we are therefore not finalizing this proposal at this time.

Final Action: Based on the public comments, we are not finalizing the proposed changes to the Medical Records requirements at § 482.24.

8. Infection Prevention and Control and Antibiotic Stewardship Programs (§ 482.42)

We proposed a change to the title of this CoP to ''Infection prevention and control and antibiotic stewardship programs.'' By adding the word ''prevention'' to the CoP name, our intent is to promote larger, cultural changes in hospitals such that prevention initiatives are recognized on balance with their current, traditional control efforts. And by adding ''antibiotic stewardship'' to the title, we would emphasize the important role that a hospital should play in combatting antimicrobial resistance through implementation of a robust stewardship program that follows nationally recognized guidelines for appropriate antibiotic use. Along with these changes, we proposed to change the introductory paragraph to require that a hospital's infection prevention and control and antibiotic stewardship programs be active and hospital-wide for the surveillance, prevention, and control of HAIs and other infectious diseases, and for the optimization of antibiotic use through stewardship. We would also require that a program demonstrate adherence to nationally recognized infection prevention and control guidelines for reducing the transmission of infections, as well as best practices for improving antibiotic use where applicable, and for reducing the development and transmission of HAIs and antibiotic-resistant organisms. While these particular changes are new to the regulatory text, it is worth noting that these requirements, with the exception of the new requirement for an antibiotic stewardship program, have been present in the Interpretive Guidelines for hospitals since 2008 (See A0747 at *Appendix A—Survey Protocol, Regulations and Interpretive Guidelines for Hospitals, http://cms.gov/manuals/Downloads/som107ap_a_hospitals.pdf*).

We also proposed to introduce the term ''surveillance'' into the text of the regulation. The addition of this term, which is also already in use in CMS Interpretive Guidelines for hospitals, is being proposed to bring the regulation up to date by reflecting current terminology in the field. As has been described in the Interpretive Guidelines for this regulation, ''surveillance'' includes infection detection, data collection, and analysis; monitoring; and evaluation of preventive interventions. (See SOM, *Appendix A—Survey Protocol, Regulations and Interpretive Guidelines for Hospitals,* pp. 361–362, *http://cms.gov/manuals/Downloads/som107ap_a_hospitals.pdf*). In collaboration with the hospital's QAPI program, the hospital would be required to develop and implement appropriate infection prevention and control interventions to address issues identified through its detection activities.

We also proposed a new requirement that hospitals demonstrate adherence to nationally recognized infection prevention and control guidelines, as well as best practices for improving antibiotic use where applicable, and for reducing the development and transmission of HAIs and antibiotic-resistant organisms. We realize that, in developing the patient health and safety requirements that are the hospital CoPs, particular attention must be paid to the ever-evolving nature of medicine and patient care. Moreover, a certain degree of latitude must be left in the requirements to allow for innovations in medical practice that improve the quality of care and move toward the reduction of medical errors and patient harm.

Therefore, we intentionally built flexibility into the revised regulations by proposing language that requires hospitals to demonstrate adherence to nationally recognized guidelines (and best practices where applicable) rather than requiring that all hospitals demonstrate adherence to a specific guideline or set of guidelines for infection prevention and control and for antibiotic stewardship. While the CDC guidelines and guidance (for example, guidelines from the Healthcare Infection

Control Practices Advisory Committee (HICAPC) and Core Elements of Hospital Antibiotic Stewardship Programs) represent one set, there are other sets of nationally recognized guidelines from which hospitals might choose, such as those established by the Association for Professionals in Infection Control and Epidemiology (APIC), the Society for Healthcare Epidemiology of America (SHEA), and the Association of periOperative Registered Nurses (AORN). The U.S. Occupational Health and Safety Administration (OSHA) also issues federal regulations applicable to infection control practices. We believe this approach will provide hospitals the flexibility they need to select and integrate those standards that best suit their individual infection prevention and control and antibiotic stewardship programs. We also believe this approach will allow hospitals the flexibility to adapt their policies and procedures in concert with any updates in the guidelines they have elected to follow.

Comment: A few commenters were concerned that the proposed requirements for antibiotic stewardship programs would dictate the treatment options for patients with conditions such as Lyme disease. Some of these commenters were particularly concerned about the proposed rule's reference to IDSA antibiotic stewardship program guidelines.

Response: We proposed to intentionally build flexibility into the regulation by proposing language that requires hospitals to demonstrate adherence to nationally recognized guidance and guidelines, rather than any specific guidance, guideline, or set of guidelines, for best practices in infection prevention and control and for implementing antibiotic stewardship programs. For infection control best practices, CDC guidelines represent a fundamental set of practices, while other sets of nationally recognized infection control guidance and guidelines provide further setting- and procedure-specific options from which hospitals might choose, such as those established by APIC, SHEA, and IDSA. For the implementation of antibiotic stewardship programs, guidance is available from several organizations, including IDSA, SHEA, American Society for Health System Pharmacists, and CDC's Core Elements.

We appreciate the concerns expressed about the inclusion of guidelines developed by individual organizations, specifically, the Infectious Disease Society of America (IDSA). The intention in the proposed rule was to reference guidance for the implementation of antibiotic stewardship programs, not treatment guidelines for any particular infection. The reference to IDSA guidelines explicitly refers to guidelines for implementing stewardship programs and even references guidelines from other societies. These guidelines are referenced specifically because they are the only guidelines that we are aware of that are dedicated solely to the implementation of antibiotic stewardship programs in hospitals. We are not requiring that hospitals choose the IDSA guidelines for antibiotic stewardship programs specifically, but rather that they choose guidance on implementing antibiotic stewardship programs from a nationally recognized source.

Comment: One commenter recommended that rather than focusing on the explicit roles of two distinct staff, the CoPs instead focus on the overall process of clinical care and infection management and permit some flexibility in how hospitals establish each of their programs. They stated that in their experience, the ASP [antibiotic stewardship program] is part of the overall ICP [infection control program], which is broader than antibiotics.

Response: We agree that careful coordination between the infection prevention and control and antibiotic stewardship programs is essential and this is stated explicitly in the regulatory text. However, we believe it is also important to highlight the distinctions between the two programs. Infection prevention and control programs are almost exclusively staffed by infection preventionists, the overwhelming majority of whom do not prescribe or manage antibiotics. Antibiotic stewardship programs must be staffed by people who are very familiar with antibiotics. Also, though both groups share some common goals of reducing antibiotic resistance and *C. difficile,* the types of interventions the two programs seek to implement are also fundamentally different. Finally, the ultimate goals of both programs are different; infection prevention and control programs seek to eliminate healthcare-associated infections, while antibiotic stewardship programs seek to ensure that all patients get optimal antibiotic therapy.

Comment: One commenter stated that, given the size and overall staff of free-standing IRFs and LTCHs, some facilities may need additional time to incorporate these new ASP staffing requirements.

Response: We agree that these new provisions might require additional time to implement beyond the standard 60 days for all facilities, not just IRFs and LTCHs. Therefore, as discussed above, the provisions regarding antibiotic stewardship will become effective and be enforced 6 months after the effective date of this final rule for all facilities. IRFs and LTCHs are still required to comply with the hospital CoPs, so changes to the hospital CoPs also apply to IRFs and LTCHs.

Comment: One commenter appreciated the flexibility afforded in the requirements regarding the leader of the ASP, but believes there is value in that position being further defined, and recommend that the ASP professional requirements be clarified and explicitly state the person must hold either a formal M.D. or Pharm. D. degree in order to comply with the regulation.

Response: While this most likely will be the case in practice, we believe that the requirements should remain flexible for hospitals and CAHs to make these determinations for themselves. Therefore, we believe that the hospital leadership should determine the appropriate qualifications for the leader of the ASP. However, we note here that the CDC Core Elements of Hospital Antibiotic Stewardship Programs (*https://www.cdc.gov/antibiotic-use/healthcare/implementation/core-elements.html#lead*) recommend including both a physician and a pharmacist (especially those with formal training and experience in infectious diseases and/or antibiotic stewardship) to co-lead the hospital AS program and to be accountable for it. We urge hospitals and CAHs to consider these recommendations when they set their ASP leadership qualifications and when hiring the appropriate staff to develop and lead these programs.

Comment: One commenter suggested that in smaller facilities CMS should give some consideration to flexibility in staffing if the goals of the program are met and a single person is capable of handling both roles and ensuring that both priorities are met.

Response: The leaders of the infection prevention and control and the antibiotic stewardship programs must have the training required to do those jobs effectively. While there are specific types of knowledge required to lead each program (that is, knowledge about infection prevention and control best practices and knowledge about antibiotic prescribing and antimicrobial resistance), there is nothing in the regulatory language that would preclude a properly trained person from leading both programs.

Comment: Several commenters urged us to be flexible in the implementation of these provisions for all hospitals, but

especially for smaller hospitals and CAHs, due to the time and effort it will take to fill leadership positions and develop their programs.

Response: We appreciate this comment and agree. We also agree that some smaller hospitals and CAHs may need extra technical assistance to implement the new provisions in a way that truly improves patient care. We are committed to partnering with federal and other partners to provide that assistance. For example, the CDC initiated an effort with The American Hospital Association, the Federal Office of Rural Health Policy, and the Pew Charitable Trusts to work with several CAHs that have successful antibiotic stewardship programs to learn best practices and implementation suggestions that can be shared with other critical access hospitals. The *Implementation of Antibiotic Stewardship Core Elements at Small and Critical Access Hospitals* and related tools released in 2017 provides guidance on practical strategies to implement antibiotic stewardship programs in small and critical access hospitals (*https://www.cdc.gov/antibiotic-use/healthcare/implementation/core-elements-small-critical.html*).

Comment: One commenter did not support our proposal to require that the leaders of the infection prevention and control and antibiotic stewardship programs be specifically appointed by the governing body of a hospital or CAH.

Response: We appreciate this concern. The goal of this proposed requirement was to ensure that the infection prevention and antibiotic stewardship leaders are vested with authority from the leadership of the hospital or CAH. To maintain this concept while allowing more flexibility, we have changed these requirements for hospitals and CAHs. Specifically, we have revised sections §§ 482.42(a)(1) and 485.640(a)(1) of the final rule to provide that the hospital (or CAH) must ensure that an individual (or individuals), who are qualified through education, training, experience, or certification in infection prevention and control, are appointed as the infection preventionist(s)/infection control professional(s) responsible for the infection prevention and control program. The selection process must include meaningful opportunity for input from members of the medical and nursing staffs and leadership.

We have also revised §§ 482.42(b)(1) and 485.640(b)(1) to now provide that the hospital (or CAH) ensure that an individual (or individuals), who is qualified through education, training, or experience in infectious diseases and/or antibiotic stewardship, is appointed as the leader(s) of the antibiotic stewardship program. The selection process must include meaningful opportunity for input from members of the medical, nursing, and pharmacy staffs.

Comment: One commenter urged CMS to modify the proposed standards regarding the demonstration of improvements in antibiotic stewardship. The commenter does not believe it is appropriate or accurate to solely use antibiotic resistance within the hospital to demonstrate antibiotic stewardship program success or evaluate a hospital's antibiotic stewardship efforts. The commenter states that numerous external factors contribute to resistance patterns, including prescribing patterns of local practitioners who may not be connected to the hospital, community-onset infections, and patient transfers from other facilities. The commenter further noted that it can be difficult to demonstrate meaningful improvement over a short period of time.

Response: We appreciate the suggestion and have modified and also deleted elements of this language for both hospitals and CAHs at §§ 482.42(b)(2)(iii) and 485.640(b)(2)(iii), respectively, to require that hospital and CAH ASPs must ''document any'' improvements, including sustained improvements, in proper antibiotic use. We agree that it would not be appropriate to use antibiotic resistance within the hospital (or CAH) as the sole criterion to demonstrate antibiotic stewardship program success or to evaluate a hospital's (or CAH's) antibiotic stewardship efforts. Therefore, we have deleted this portion of the regulatory language at §§ 482.42(b)(2)(iii) and 485.640(b)(2)(iii). We believe that this will provide hospitals and CAHs the ability to record any category of improvement in proper antibiotic use and will not restrict ASPs to demonstrating specific types of improvements like decreased antibiotic resistance (though ASPs are still encouraged to document any improvements in this area). These revisions will also implicitly acknowledge that there often external factors, as noted by the commenter, that can negatively contribute to antibiotic resistance in the facility and that can also negatively impact meaningful improvements in this area in the short term. Hospitals and CAHs will still need to ensure that their ASPs are following nationally recognized guidelines and best practices while documenting the evidence-based use of antibiotics.

Comment: One commenter recommended that in order to clarify the organization of the antibiotic stewardship and infection prevention and control programs, the following change be made to the existing language in the preamble of the proposed rule: ''Antibiotic Stewardship, as a component of controlling infection, has long been recognized as one of the special challenges that hospitals must meet in order to address the problems of multidrug-resistant organisms and Clostridium difficile infections (CDIs) in hospitals and outpatient settings.''

Response: We appreciate this commenter's recognition of the importance of the antibiotic stewardship and infection prevention and control programs.

Final Decision: After consideration of the comments we received on the proposed rule, we are finalizing § 482.42 with some minor modifications to the overall regulatory language and with the following more substantive modifications:

- Revise and finalize the language of §§ 482.42(a)(1) and 485.640(a)(1) to now require: ''An individual (or individuals), who is qualified through education, training, experience, or certification in infection prevention and control, is appointed as the infection preventionist(s)/infection control professional(s) responsible for the infection prevention and control program. The selection process must include meaningful opportunity for input from members of the medical and nursing staffs.''
- Revise and finalize the language of §§ 482.42(b)(1) and 485.640(b)(1) to now require: ''An individual (or individuals), who is qualified through education, training, or experience in infectious diseases and/or antibiotic stewardship, is appointed as the leader(s) of the antibiotic stewardship program. The selection process must include meaningful opportunity for input from members of the medical, nursing, and pharmacy staffs.''
- Revise and finalize the language at §§ 482.42(b)(2)(iii) and 485.640(b)(2)(iii) to now require: ''Documents any improvements, including sustained improvements, in proper antibiotic use.''

9. Technical Corrections

Technical Amendments to § 482.27(b)(7)(ii) and § 482.27(b)(11)

In the final rule ''Medicare and Medicaid Programs; Hospital Conditions of Participation: Laboratory Services,'' amending 42 CFR 482.27 (72 FR 48562, 48573, Aug. 24, 2007), we stated that

HCV notification requirements for donors tested before February 20, 2008, would expire on August 24, 2015, in accordance with 21 CFR 610.48. Since the notification requirement period has expired, we proposed to remove § 482.27(b)(11), ''Applicability'' and the corresponding requirements set out at § 482.27(b)(7)(ii).

Corrected Reference in § 482.58

In our review of the Hospital Conditions of Participation, we found an incorrect cross-reference at § 482.58(b)(6), which currently reads ''Discharge planning (§ 483.20(e))''. Subsection 483.20(e) addresses coordination of the preadmission screening and resident review program, not discharge planning. SNF requirements for discharge plans are set out at § 483.20(l). Therefore, we proposed to correct the reference to read ''Discharge summary (§ 483.20(l))''.

Removal of Inappropriate References to § 482.12(c)(1)

Upon our review of the Hospital CoPs for the proposed rule, we discovered that there were several provisions that incorrectly reference § 482.12(c)(1), which lists the types of physicians and applies only to patients who are Medicare beneficiaries. Section 482.12(c) states that the governing body of the hospital must ensure that every Medicare patient is under the care of one of the following practitioners:

- A doctor of medicine or osteopathy;
- A doctor of dental surgery or dental medicine who is legally authorized to practice dentistry by the State and who is acting within the scope of his or her license;
- A doctor of podiatric medicine, but only with respect to functions which he or she is legally authorized by the State to perform;
- A doctor of optometry who is legally authorized to practice optometry by the State in which he or she practices;
- A chiropractor who is licensed by the State or legally authorized to perform the services of a chiropractor, but only with respect to treatment by means of manual manipulation of the spine to correct a subluxation demonstrated by x-ray to exist; and
- A clinical psychologist as defined in § 410.71 of this chapter, but only with respect to clinical psychologist services as defined in § 410.71 of this chapter and only to the extent permitted by State law.

The reference of this ''Medicare beneficiary-only'' requirement in certain other provisions of the hospital CoPs (which we have listed below) inappropriately links it to *all* patients and not Medicare beneficiaries exclusively. In fact, the Act at § 1861(e)(4) states that ''every patient with respect to whom payment may be made under this title must be under the care of a physician except that a patient receiving qualified psychologist services (as defined in subsection (ii)) may be under the care of a clinical psychologist with respect to such services to the extent permitted under State law.'' In accordance with that provision, we have chosen to apply § 482.12(c) to Medicare patients. With the exception of a few provisions in the CoPs such as those directly related to § 482.12(c) described here, the remainder of the CoPs apply to all patients, regardless of payment source, and not just Medicare beneficiaries. For example, the Nursing Services CoP, at § 482.23(c)(1), requires that all ''drugs and biologicals must be prepared and administered in accordance with Federal and State laws, the orders of the practitioner or practitioners responsible for the patient's care as specified under § 482.12(c), and accepted standards of practice.'' Since the CoPs clearly allow hospitals to determine which categories of practitioners would be responsible for the care of other patients, outside the narrow Medicare beneficiary restrictions of § 482.12(c), this reference is inappropriate and unnecessarily restrictive of hospitals and their medical staffs to make these determinations based on State law and practitioner scope of practice.

In order to clarify that these provisions apply to all patients and not only Medicare beneficiaries, we proposed to delete any inappropriate references to § 482.12(c). Therefore, we proposed to delete references to § 482.12(c) found in the following provisions: §§ 482.13(e)(5), 482.13(e)(8)(ii), 482.13(e)(14), and 482.13(g)(4)(ii) in the Patients' Rights CoP; and §§ 482.23(c)(1) and 482.23(c)(3) in the Nursing Services CoP. Additionally, and in the course of finalizing this rule, we discovered that we inadvertently failed to propose to delete an inappropriate reference to § 482.12(c), which is contained in the current provision at § 482.61(d) in the Special Medical Record Requirements for Psychiatric Hospitals CoP under the Special Requirements for Psychiatric Hospitals (regarding which hospital personnel may complete progress notes). Therefore, in the interests of consistency with the other revisions here, we are also deleting this reference in this final rule. We believe this to be a technical correction, for which notice and comment are unnecessary. We have noted this revision in the ''Waiver of Proposed Rulemaking'' discussion found above at section at I.B.14. With respect to all of these provisions, the reference to services provided under the order of a physician or other practitioner would still apply. We did not receive any comments on these proposed changes and are therefore finalizing them without change.

C. Provisions of the Proposed Regulations and Responses to Public Comments for Critical Access Hospitals (42 CFR Part 485)

We identified several priority areas in the CoPs for CAHs (42 CFR part 485, subpart F) for updates and revisions. We believe that these proposed regulations would benefit the quality of care provided with a positive impact on patient satisfaction, length of stay, and, ultimately, cost per patient. Additionally, we have proposed the following changes to the CAH CoPs, after considering the resource restrictions of remote and frontier CAHs.

1. Organizational Structure (§ 485.627(b))

This proposal was also included in the Medicare and Medicaid Programs; Regulatory Provisions To Promote Program Efficiency, Transparency, and Burden Reduction, Proposed Rule (83 FR 47686). We are finalizing this proposal in that final rule. We refer readers to the discussion under Section I.B.8.a for further information regarding this provision.

2. Periodic Review of Clinical Privileges and Performance (§ 485.631(d)(1) Through (2))

We proposed to change the current CoP at § 485.641 to reflect the current QAPI format used in hospitals. As such, we proposed to retain the requirements under paragraphs § 485.641(b)(3) through (4), that are currently found under the ''Periodic evaluation and quality assurance'' CoP, and relocate them under a new standard under the ''Staffing and staff responsibilities'' CoP at § 485.631. We are not changing these requirements and believe that they are still appropriate for the CAH regulations. Since the current CoP under § 485.631 discusses staffing requirements and responsibilities, we believe that relocating the requirement under a new standard, entitled ''Periodic Review of Clinical Privileges and Performance'' (§ 485.631(d)) is a more appropriate placement for the current provisions requiring a CAH to evaluate the quality of care provided by

their nurse practitioners, clinical nurse specialists, certified nurse midwives, physician assistants, doctors of medicine, or doctors of osteopathy.

3. Provision of Services (§ 485.635(a)(3)(vii))

We currently require CAHs at § 485.635(a)(3)(vii) to have procedures that ensure that the nutritional needs of inpatients are met in accordance with recognized dietary practices and the orders of the practitioner responsible for the care of the patients and that the requirement of § 483.25(i) of this chapter is met with respect to inpatients receiving post-hospital SNF care.

We proposed revisions to § 485.635(a)(3)(vii) that would require that individual patient nutritional needs be met in accordance with recognized dietary practices and the orders of the practitioner responsible for the care of the patients, or by a qualified dietician or qualified nutrition professional as authorized by the medical staff in accordance with State law governing dietitians and nutrition professionals. In addition, we also proposed that the requirement of § 483.25(i) of this chapter is met with respect to inpatients receiving post hospital SNF care.

Comment: Commenters support CMS' efforts to allow clinicians to practice to the fullest extent of their credentials. The commenters stated that this proposed change at § 485.635 requiring diets to be ordered by the practitioner responsible for the patient or a qualified dietitian or qualified nutrition professional as authorized by the medical staff and in accordance with state law, recognizes the specialized knowledge and training of dietitians and the benefit available to patients.

Response: We appreciate the comments and will finalize this change as proposed.

4. Provision of Services (485.635(g))

At § 485.635(g) we proposed a new requirement regarding non-discriminatory behavior. Similar to our non-discrimination proposal for hospitals, we proposed to require that a CAH not discriminate on the basis of race, color, religion, national origin, sex (including gender identity), sexual orientation, age, or disability. We further proposed to require that CAHs establish and implement a written policy prohibiting discrimination on the aforementioned bases and that they inform each patient (and/or support person, where appropriate), in a language he or she can understand, of his or her right to be free from discrimination against them and how to file a complaint if they encounter discrimination. After consideration of the comments that we received, we are not finalizing our proposal and are instead deferring to the non-discrimination requirements of Section 1557 of the Affordable Care Act. We refer readers to section III.B.3 of this final rule for a more detailed discussion.

5. Infection Prevention and Control and Antibiotic Stewardship Programs (§ 485.640)

We proposed to remove the current requirements at § 485.635(a)(3)(vi) and § 485.641(b)(2) and are adding a new infection prevention and control and antibiotic stewardship CoP at § 485.640 for CAHs because the existing standards for infection control do not reflect the current nationally recognized standards of practice for the prevention and elimination of healthcare-associated infections and for the appropriate use of antibiotics.

We are finalizing the proposal that each CAH has facility-wide infection prevention and control and antibiotic stewardship programs that are coordinated with the CAH QAPI program, for the surveillance, prevention, and control of HAIs and other infectious diseases and for the optimization of antibiotic use through stewardship.

Comment: Commenters were supportive of the proposal to require each CAH to have facility-wide infection prevention and control and antibiotic stewardship programs that are coordinated with the CAH QAPI program. Commenters recognized that these changes will support a culture of antibiotic stewardship that will increase patient safety and quality of care.

Response: We appreciate the comments received on the proposed changes for the CAH infection control and antibiotic stewardship programs and will finalize the changes as proposed.

Comment: Commenters noted that CAHs would need time, resources, flexibility and support to adapt to the antibiotic stewardship requirements, especially given the fact that many do not have staff pharmacists available at all times.

Response: We also appreciate these comments. While we understand that CAHs may have less resources available, we encourage CAHs to utilize the existing available resources to ensure the antibiotic stewardship requirements are met. While small and critical access hospitals face special challenges in implementing antibiotic stewardship programs, antibiotic stewardship is no less important in these settings. Small and critical access hospitals also have some factors that can support improvements in care, as they are often tight-knit communities where collaboration is the norm. The CDC has resources available for training and education as well as support for providers implementing antibiotic stewardship programs specifically for CAHs. We also encourage CAHs to work with other hospitals or CAHs in their network (if available) for pharmaceutical support. CAHs should also be encouraged to work with their respective quality improvement network(s)/organization(s) and health departments for additional support and resources. Additionally, we encourage CAHs to use the technical assistance available from their State Flex Program. CAHs can find contact information for their State Flex Program at *https://www.ruralcenter.org/tasc/flexprofile.*

Final Rule Action: We are finalizing the proposed changes without revision.

§ 485.640(a)(1) Through (2) Infection Control Officer(s); and Prevention and Control of Infections Within the CAH and Between the CAH and Other Healthcare Settings

At § 485.640(a)(1) we proposed that the CAH ensure that an individual (or individuals), who are qualified through education, training, experience, or certified in infection, prevention and control, are appointed by the governing body, or responsible individual, as the infection preventionist(s)/infection control professional(s) responsible for the infection prevention and control program at the CAH and that the appointment is based on the recommendations of medical staff and nursing leadership.

We proposed at § 485.640(a)(2) that the infection prevention and control program, as documented in its policies and procedures, employ methods for preventing and controlling the transmission of infections within the CAH and between the CAH and other healthcare settings. The program, as documented in its policies and procedures, would have to employ methods for preventing and controlling the transmission of infection within the CAH setting (for example, among patients, personnel, and visitors) as well as between the CAH (including outpatient services) and other institutions and healthcare settings.

Comment: Commenters were generally supportive of the proposal for CAHs to have a qualified individual (or individuals) in the role of the infection preventionist(s)/infection control professional(s).

Response: We appreciate the comments received on the proposed changes for this CAH proposal.

Final Rule Action: We are finalizing the proposed changes without revision.

§ 485.640(a)(3) Healthcare-Associated Infections (HAIs)

We proposed at § 485.640(a)(3) that the infection prevention and control program include surveillance, prevention, and control of HAIs, including maintaining a clean and sanitary environment to avoid sources and transmission of infection, and that the program also address any infection control issues identified by public health authorities.

Comment: Commenters were supportive of the proposal for CAHs to have an infection prevention and control program that includes surveillance, prevention, and control of HAIs.

Response: We appreciate the comments received on the proposed changes for this CAH proposal.

Final Rule Action: We are finalizing the proposed changes without revision.

§ 485.640(a)(4) Scope and Complexity

We proposed at § 485.640(a)(4) that the infection prevention and control program reflects the scope and complexity of the services provided by the CAH.

Comment: Commenters were supportive of the proposal for CAHs to have an infection and prevention and control program that reflects the scope and complexity of the services provided by the CAH, with one commenter requesting that specific language stating that CRNAs and other anesthesia professionals should be included in the development and leadership of infection prevention and control programs in hospitals and CAHs.

Response: We appreciate the comments received on the proposed changes for this CAH proposal. As noted in the preamble, as it relates to CAHs, staffing for these programs should be appropriate to the scope and complexity of the services offered at the CAH. We believe that CAHs should have the flexibility to include the individuals who are deemed appropriate by the CAH to be included in the development and leadership of these programs.

Final Rule Action: We are finalizing the proposed changes.

§ 485.640(b)(1) Leader of the Antibiotic Stewardship Program

We proposed at § 485.640(b)(1) that the CAH's governing body ensure that an individual, who is qualified through education, training, or experience in infectious diseases and/or antibiotic stewardship is appointed as the leader of the antibiotic stewardship program and that the appointment is based on the recommendations of medical staff and pharmacy leadership.

Comment: Commenters were supportive of the proposal for the CAH's governing body to ensure that an individual with the appropriate experience is appointed as the leader of the antibiotic stewardship program. One commenter noted that this role will be fulfilled by a nurse who also has other related responsibilities and may not have the specialized training necessary for the infection preventionist role. The commenter encouraged CMS to ensure that cost effective and accessible education and training are available for CAH infection preventionists, and that ongoing technical assistance be provided. Additionally, the commenter requested infection preventionist expertise be available through shared services agreements across CAH networks or similar arrangements.

Response: We appreciate the comments received on the proposed changes for this CAH proposal. The proposal requires that the leader of the antibiotic stewardship program be qualified through education, training, or experience in infectious diseases and/or antibiotic stewardship. We encourage CAHs to utilize the infection control training available and resources that are available through the CDC (*https://www.cdc.gov/infectioncontrol/training/index.html*). We encourage CAHs to reach out to other CAHs (within their network or otherwise) to collaboratively meet their needs of ensuring that a leader of the antibiotic stewardship program is available to meet the needs of the CAH and its patients.

Final Rule Action: We are finalizing the proposed changes.

§ 485.640(b)(2)(i), (ii), and (iii) Goals of the Antibiotic Stewardship Program

The proposed requirements at § 485.640(b)(2)(i),(ii), and (iii) would ensure that the following goals for an antibiotic stewardship program are met: (i) Demonstrate coordination among all components of the CAH responsible for antibiotic use and resistance, including, but not limited to, the infection prevention and control program, the QAPI program, the medical staff, and nursing and pharmacy services; (ii) document the evidence-based use of antibiotics in all departments and services of the CAH; and (iii) demonstrate improvements, including sustained improvements, in proper antibiotic use, such as through reductions in, CDI and antibiotic resistance in all departments and services of the hospital. We believe that these three components are essential for an effective program.

We did not receive any comments on this proposal.

Final Rule Action: We are finalizing the proposed changes.

§ 485.640(b)(3) and (4) Nationally Recognized Guidelines; and Scope and Complexity

These provisions would require the CAH to ensure that the antibiotic stewardship program adheres to the nationally recognized guidelines, as well as best practices, for improving antibiotic use. The CAH's stewardship program would have to reflect the scope and complexity of services offered.

Comments for the identical hospital proposal are discussed with the hospital proposal in section II.B.4.

Final Rule Action: We are finalizing the proposed changes.

§ 485.640(c)(1), (2), and (3) Governing Body; Infection Prevention and Control Professionals'; and Antibiotic Stewardship Program Leader's Responsibilities

We proposed at § 485.640(c)(1)(i) and (ii) requirements that the governing body or responsible individual ensure that:

- Systems are in place and operational for the tracking of all infection surveillance, prevention, and control, and antibiotic use activities in order to demonstrate the implementation, success, and sustainability of such activities; and
- All HAIs and other infectious diseases identified by the infection prevention and control program and antibiotic use issues identified by the antibiotic stewardship program are addressed in collaboration with CAH QAPI leadership.

At § 485.640(c)(2)(i)–(vi), we proposed that the responsibilities of the infection prevention and control professionals would include the development and implementation of facility-wide infection surveillance, prevention, and control policies and procedures that adhere to nationally recognized guidelines.

The governing body or responsible individual would be responsible for all documentation, written or electronic, of the infection prevention and control program and its surveillance, prevention, and control activities. Additionally, the infection preventionist(s)/infection control professional(s) would be responsible for:

• Communication and collaboration with the CAH's QAPI program on infection prevention and control issues;

• Competency-based training and education of CAH personnel and staff including professional health care staff and, as applicable, personnel providing services in the CAH under agreement or arrangement, on the practical applications of infection prevention and control guidelines, policies and procedures;

• Prevention and control of HAIs, including auditing of adherence to infection prevention and control policies and procedures by CAH personnel; and

• Communication and collaboration with the antibiotic stewardship program.

Finally in this CoP, at § 485.640(c)(3), we proposed requirements for the leader of the antibiotic stewardship program similar to the proposed responsibilities for the CAH's designated infection preventionist(s)/infection control professional(s) at paragraph (c)(2). We believe that a CAH's antibiotic stewardship program is the most effective means for ensuring appropriate antibiotic use. We also believe that such a program would require a leader responsible and accountable for its success. Therefore, we proposed that the leader of the antibiotic stewardship program would be responsible for the development and implementation of a facility-wide antibiotic stewardship program, based on nationally recognized guidelines, to monitor and improve the use of antibiotics. We also propose that the leader of the antibiotic stewardship program would be responsible for all documentation, written or electronic, of antibiotic stewardship program activities. The leader would also be responsible for communicating and collaborating with medical and nursing staff, pharmacy leadership, and the CAH's infection prevention and control and QAPI programs, on antibiotic use issues.

Finally, we proposed that the leader would be responsible for the competency-based training and education of CAH personnel and staff, including medical staff, and, as applicable, personnel providing contracted services in the CAHs, on the practical applications of antibiotic stewardship guidelines, policies, and procedures.

We did not receive any comments on this proposal.

Final Rule Action: We are finalizing the proposed changes.

6. Quality Assessment and Performance Improvement (QAPI) Program (§ 485.641)

Since May 26, 1993 (58 FR 30630), the ''Periodic evaluation and quality assurance review'' CoP (§ 485.641) has not been updated to reflect current industry standards that utilize the QAPI model (§ 482.21) to assess and improve patient care.

We proposed to revise § 485.641 (81 FR 39464) to establish new requirements for a QAPI program at a CAH. This new requirement for CAHs would replace the existing reactive annual evaluation and quality assurance review requirement with a proactive approach of a QAPI program. A QAPI program that enables the CAH to review its operating systems and processes of care to identify and implement opportunities to provide high quality and safe care to its patients focusing on improving health outcomes and preventing and reducing medical errors.

We believe that much of the work and resources that are currently required under the existing periodic evaluation and quality assurance CoP would be utilized to adhere to the new QAPI requirement. We proposed to retain the requirements under paragraphs § 485.641(b)(3)–(4) regarding the evaluation of the diagnosis and treatment furnished by physicians and non-physician practitioners and relocate them to a new standard under the ''Staffing and staff responsibilities'' CoP at § 485.631.

Comment: Commenters generally agree with requiring CAHs to have a QAPI program that is integrated with all of the departments within a CAH. Commenters also agree with encouraging CAHs to use proven quality improvement data to improve the quality and safety of care provided. One commenter asked about requiring CAHs to report externally for comparative benchmarking and performance improvement activities. A few commenters stated that we should require CAHs to make informed choices about where they focus improvement work to ensure their efforts have a greater benefit to the patients and communities served. Some commenters were concerned that we underestimated the time and effort it would take CAH's to implement a new QAPI program. Also, commenters requested an implementation date that is one year after the publication of this final rule and that we provide technical assistance to CAHs for the implementation of these requirements.

Response: We have taken into consideration the comment that we underestimated the time and effort it would take CAH's to implement these new QAPI requirements. We agree with an extended timeframe for implementation to allow CAHs additional time to prepare and ultimately comply with the requirements. Therefore, the requirements at § 485.641 must be implemented by 18 months after the effective date of this final rule. We also encourage CAHs to utilize the technical assistance and services for CAHs that are available through the State Flex Programs, including the Medicare Beneficiary Quality Improvement Project (MBQIP), supported by HRSA's Federal Office of Rural Health Policy. CAHs can find contact information for their State Flex Program on this page, *https://www.ruralcenter.org/tasc/flexprofile.* We do not require external reporting for comparative benchmarking and performance improvement activities as a condition of participation; however, we do require that CAHs maintain and demonstrate evidence of the effectiveness of its QAPI program.

Finally, we have re-evaluated our proposed requirements to eliminate unnecessary prescriptiveness proposed under paragraph (c)(1) through (6); paragraph (e); and paragraph (f)(2) through (3) and are withdrawing those proposed provisions. These changes to the proposal will allow each CAH the flexibility to implement its QAPI program in the most efficient manner for its unique circumstances.

We will require that the CAH meet the objectives of the QAPI program, but will allow the CAH to determine the best way to do so with respect to determining detailed program requirements, requirements related to distinct improvement projects, and details of data use. In accordance with the new requirements under § 465.641(e), CAHs will be required to incorporate quality indicator data, including patient care data and other relevant data, in order to achieve the goals of the QAPI program. We noted in our proposal suggesting that CAHs incorporate other relevant data, such as data submitted to or received from national quality reporting and quality performance programs, into their data collection analysis; however, we have removed the language referencing national quality reporting and quality performance program data from the regulatory text. We will expand on this and other examples of relevant data in the subregulatory guidance.

This data must be used by the CAH to achieve the objectives of the QAPI program, including addressing outcome indicators related to improved health

outcomes and the prevention and reduction of medical errors, adverse events, CAH-acquired conditions, and transitions of care, including readmissions. This will ensure that the CAH's quality improvement efforts are evidenced based and focused on the needs of the population served by the CAH in a manner that best suits the unique characteristics of the CAH.

In addition, since the QAPI requirement will replace the annual evaluation requirement, we believe that a large portion of the cost can be utilized for the QAPI program because CAHs are conducting many of the functions required for an effective QAPI program. CAHs are currently required to carry out an annual evaluation of its total program. They are to evaluate their health care policies and the appropriateness of the services they provide. All patient care services and other services affecting patient health must be evaluated. Also, we have removed some of the prescriptive requirements under proposed 485.641(f)(2) through (3) for the QAPI program and recalculated the cost for implementation.

Final Rule Decision: We are finalizing the proposal, but eliminating the following proposed requirements:

- Proposed paragraph (c)(1) through (6);
- Proposed paragraph (e); Performance improvement projects
- Revise the proposed requirement under paragraph (e) to remove the phrase, ''. . . such as data submitted to or received from national quality reporting and quality performance programs . . .'' and
- Proposed paragraph (f)(2 through (f)(3); Program data collection and analysis.

7. Technical Corrections

We proposed to correct a typographical error in the regulations at § 485.645 by correcting the word ''provided'' to ''provide'' in the lead first sentence. As proposed, the lead sentence would read as follows: ''A CAH must meet the following requirements in order to be granted an approval from CMS to provide post-hospital SNF care, as specified in § 409.30 of this chapter, and to be paid for SNF-level services, in accordance with paragraph (c) of this section.'' As noted, we are also deleting an obsolete cross-reference to § 482.12(c) in our revision of the regulations text at § 482.61(d).

D. Requirements for Issuance of Regulations

This final rule finalizes provisions set forth in ''Regulatory Provisions to Promote Program Efficiency, Transparency, and Burden Reduction (CMS–3346–P,'' published September 20, 2018 (83 FR 47686), ''Hospital and Critical Access Hospital (CAH) Changes to Promote Innovation, Flexibility, and Improvement in Patient Care (CMS–3295–P),'' published June 16, 2016 (81 FR 39448); and ''Fire Safety Requirements for Certain Dialysis Facilities (CMS–3334–P),'' published November 4, 2016 (81 FR 76899).

Section 902 of the Medicare Prescription Drug, Improvement, and Modernization Act of 2003 (MMA) amended section 1871(a) of the Act and requires the Secretary, in consultation with the Director of the Office of Management and Budget, to establish and publish timelines for the publication of Medicare final regulations based on the previous publication of a Medicare proposed or interim final regulation. Section 902 of the MMA also states that the timelines for these regulations may vary but shall not exceed 3 years after publication of the preceding proposed or interim final regulation except under exceptional circumstances.

This final rule has been published within the 3-year time limit imposed by section 902 of the MMA for ''Hospital and Critical Access Hospital (CAH) Changes to Promote Innovation, Flexibility, and Improvement in Patient Care (CMS–3295–P),'' and ''Fire Safety Requirements for Certain Dialysis Facilities (CMS–3334–P),'' published November, 4, 2016 (81 FR 76899).

Additionally, a continuation notice for ''Hospital and Critical Access Hospital (CAH) Changes to Promote Innovation, Flexibility, and Improvement in Patient Care (CMS–3295–P) was published on June 11, 2019, (84 FR 27069). Therefore, the final rule is in accordance with the Congress' intent to ensure timely publication of final regulations.

E. Collection of Information Requirements

Under the Paperwork Reduction Act of 1995, we are required to provide 30-day notice in the **Federal Register** and solicit public comment before a collection of information requirement is submitted to the Office of Management and Budget (OMB) for review and approval. In order to fairly evaluate whether an information collection should be approved by OMB, section 3506(c)(2)(A) of the Paperwork Reduction Act of 1995 requires that we solicit comment on the following issues:

- The need for the information collection and its usefulness in carrying out the proper functions of our agency.
- The accuracy of our estimate of the information collection burden.
- The quality, utility, and clarity of the information to be collected.
- Recommendations to minimize the information collection burden on the affected public, including automated collection techniques.

We are soliciting public comment on each of these issues for the following sections of this document that contain information collection requirements (ICRs).

1. ICRs Regarding Quality Assessment and Performance Improvement (§ 482.21)

The existing QAPI CoP requires each hospital to:

- Develop, implement, maintain, and evaluate its' own QAPI program;
- Establish a QAPI program that reflects the complexity of its organization and services;
- Establish a QAPI program that involves all hospital departments and services and focuses on improving health outcomes and preventing and reducing medical errors; and
- Maintain and demonstrate evidence of its QAPI program for review by CMS.

We are finalizing a minor change to the program data requirements at § 482.21(b). Currently, we require that hospitals incorporate quality indicator data including patient care data, and other relevant data, for example, information submitted to, or received from, the hospital's Quality Improvement Organization.

We are updating this requirement to reflect and capitalize on the wealth of important quality data available to hospitals through several quality data reporting programs. Specifically, we are requiring that the hospital QAPI program must incorporate quality indicator data including patient care data, and other relevant data such as data submitted to or received from quality reporting and quality performance programs, including, but not limited to, data related to hospital readmissions and hospital-acquired conditions. Hospitals are likely to be participating in one or more existing quality reporting and quality performance programs such as the Hospital Inpatient Quality Reporting program, the Hospital Value-Based Purchasing Program, the Hospital Acquired Condition Reduction program, Hospital Compare, the Medicare and Medicaid Electronic Health Record

Incentive Programs, the Hospital Outpatient Quality Reporting program, and the Joint Commission's Quality Check™. Since a hospital is already collecting and reporting quality measures data for these programs, we do not believe that this change would increase the information collection burden for hospitals.

2. ICRs Regarding Nursing Services (§ 482.23)

We are finalizing our proposal to revise § 482.23(b), which currently states ''There must be supervisory and staff personnel for each department or nursing unit to ensure, when needed, the immediate availability of a registered nurse for bedside care of any patient,'' to delete the term ''bedside,'' which might imply only inpatient services to some readers. The nursing service must ensure that patient needs are met by ongoing assessments of patients' needs and must provide nursing staff to meet those needs regardless of whether the patient is an inpatient or an outpatient. We are allowing a hospital to establish a policy that would specify which, if any, outpatient units would not be required to have an RN physically present as well as the alternative staffing plans that would be established under such a policy. The policy must take into account factors such as the services delivered; the acuity of patients typically served by the facility; and the established standards of practice for such services. In addition, the policy must be approved by the director of nursing and be reviewed at least once every 3 years.

TJC-accredited hospitals are already allowed this flexibility in nursing services policy. Those hospitals that use their TJC accreditation for deeming purposes are required to have ''Leaders [who] provide for a sufficient number and mix of individuals to support safe, quality care, treatment, and services. (*Note:* The number and mix of individuals is appropriate to the scope and complexity of the services offered.)'' (CAMH, Standard LD.03.06.01, EP 3). Further, TJC-accredited hospitals also require the ''nurse executive, registered nurses, and other designated nursing staff [to] write: Nursing policies and procedures.'' (CAMH, Standard NR.02.02.01, EP 3). Therefore, we expect that TJC-accredited hospitals already have the policies and procedures that satisfy the requirements in this subsection, including medical staff approval and regular review. If there are any tasks that a TJC-accredited hospital may need to complete to satisfy the requirement for this subsection, we expect that the burden imposed would be negligible. Thus, for the approximately 3,900 TJC-accredited hospitals the development of policies and procedures that would satisfy this subsection would constitute a usual and customary business practice in accordance with 5 CFR 1320.3(b)(2).

The non TJC-accredited hospitals would need to review their current policies and procedures and update them so that they comply with the requirements in § 482.23(b). This would be a one-time burden on the hospital. We estimate that this would require a physician, a nurse, and one administrator. Including fringe benefits and overhead calculated at 100% of one's hourly wage, we estimate that physicians earn a total hourly compensation of $191, administrators earn an average hourly compensation of $189, and registered nurses earn an hourly compensation of $71 (2017 BLS Wage Data by Area and Occupation at (*https://www.bls.gov/oes/2017/may/oes_nat.htm*). We estimate that each person would spend three hours on this activity for a total of nine hours at a cost of $1,353 (3 hours × $71 for a nurse's hourly wage + 3 hours × $189 for an administrator's hourly wage + 3 hours × $191 for a physician's hourly wage). For all 1,193 non-TJC-accredited hospitals to comply with this requirement, we estimate a total one-time cost of approximately $1.6 million (1,193 hospitals × $1,353). We estimate that review of the policies and procedures once every 3 years would take one hour for each individual included for a total cost of $538,043 ((1 hour × $71 for a nurse's hourly wage + 1 hour × $189 for an administrator's hourly wage + 1 hour × $191 for a physician's hourly wage) × 1,193 hospitals), or an annualized cost of $179,347. The burden associated with these requirements will be captured in an existing information collection request (OMB Control No. 0938–0328).

3. ICRs Regarding Condition of Participation: Quality Assessment and Performance Improvement Program (§ 485.641)

§ 485.641 would require CAHs to develop, implement, and maintain an effective, ongoing, CAH-wide, data-driven QAPI program. The QAPI program must be appropriate for the complexity of the CAH's organization and the services it provides. In addition, CAHs must comply with all of the requirements set forth in § 485.641(b) through (e).

The current CAH CoPs at § 485.641 require CAHs to have an effective quality assurance program to evaluate the quality and appropriateness of the diagnosis and treatment furnished in the CAH and the treatment outcomes. CAHs are currently required to conduct a periodic evaluation and quality assurance review (42 CFR 485.641(a)). They are required to evaluate its total program (for example, policies and procedures and services provided) annually. The evaluation must include reviewing the utilization of the CAH services using a representative sample of both active and closed clinical records, as well as reviewing the facility's health care policies. The purpose of the evaluation is to determine whether the utilization of services was appropriate, the established policies were followed, and if any changes are needed. The CAH's staff considers the findings of the evaluation and takes corrective action, if necessary (42 CFR 485.641(b)(5)(i)). Thus, we believe that all of the CAHs are performing the activities that are required to comply with many of the requirements in § 485.641. However, we also believe that the CAHs would need to review their current quality assurance program and revise and, if needed, develop new provisions to ensure compliance with the requirements.

TJC accreditation standards for performance improvement (PI) already require that CAHs collect, compile, and analyze to monitor their performance (TJC Accreditation Standard PI.01.01.01 and PI.02.01.01). These TJC-accredited CAHs must also improve their performance on an ongoing basis (TJC Accreditation Standard PI.03.01.01). Thus, we believe that the 349 TJC-accredited CAHs are already in compliance with the new requirements in § 485.641. However, each CAH would need to review their current practice to ensure that they are in compliance with all of the requirements under § 485.641. Any additional tasks those CAHs would need to comply with the requirements for this section should result in a negligible burden, if any. Thus, the burden for these activities for the 349 TJC-accredited CAHs will be excluded from the burden analysis because they constitute usual and customary business practices in accordance with 5 CFR 1320.3(b)(2).

The 1,004 non TJC-accredited CAHs would need to review their current programs and then revise and develop new provisions of their programs to ensure compliance with the new requirements. We believe that the CAH QAPI leadership (consisting of a physician, and/or administrator, mid-level practitioner, and a nurse) would need to have at least two meetings to ensure that the current annual evaluation and quality assurance (QA)

program is transitioned into the QAPI format. The first meeting would be to discuss the current quality assurance program and what needs to be included based on the new QAPI provision. The second meeting would be to discuss strategies to update the current policies, and then to discuss the process for incorporating those changes. We believe that these meetings would take approximately two hours each. We estimate that the physician would have a limited amount of time, approximately 1 hour to devote to the QAPI activities. Additionally, we estimate these activities would require 4 hours of an administrator's time, 4 hours of a mid-level practitioner's time, 8 hours of a nurse's time, and 2 hours of a clerical staff person's time for a total of 19 burden hours. We believe that the CAH's QAPI leadership (formerly the periodic evaluation and quality assurance leadership) would need to meet periodically to review and discuss the changes that would need to be made to their program. We also believe that a nurse would likely spend more time developing the program with the mid-level practitioner. The physician would likely review and approve the program. The clerical staff member would probably assist with the program's development and ensure that the program was disseminated to all of the necessary parties in the CAH. This burden estimate is slightly lower than what was published in the proposed rule because we re-evaluated our proposed requirements to eliminate unnecessary prescriptiveness. The finalized requirements are expected to allow more flexibility, and therefore slightly less burden. Since a CAH is currently required to evaluate its total program and evaluate the quality and appropriateness of the services furnished, take appropriate action to address deficiencies and document such activities, we believe that the resources utilized on the current QA program would be utilized for the ongoing QAPI activities under § 485.641(b)–(e). Thus, we estimate that for each CAH to comply with the requirements in this section it would require 19 burden hours (1 for a physician + 4 for an administrator + 4 for a mid-level practitioner + 8 for a nurse + 2 for a clerical staff person) at a cost of $1,657 ($191 for a physician + $428 for an administrator (4 hours × $107) + $404 for a mid-level practitioner (4 hours × $101) + $568 (8 hours × $71 for a nurse) + $66 for a clerical staff person (2 hours × $33). Therefore, for all 1,004 non TJC-deemed CAHs to comply with these requirements, it would require 19,076 burden hours (19 × 1,004 non TJC-deemed CAHs) at a cost of approximately $1.7 million ($1,657 for each CAH × 1,004 non TJC-deemed CAHs). We note here the difference in hourly wage between a hospital CEO/administrator ($189) and a CAH CEO/administrator ($107). This is estimated to be an additional 15,431 hours and $1.3 million in cost compared to the existing QA burden. The burden associated with these requirements will be captured in an existing information collection request (OMB Control No. 0938–1043).

IV. Economic Analyses

A. Regulatory Impact Analysis for Regulatory Provisions To Promote Program Efficiency, Transparency, and Burden Reduction

1. Statement of Need

All major and many ostensibly minor government regulations should undergo periodic review to ensure that they do not unduly burden regulated entities or the American people, and to reflect current knowledge as to their regulatory effects. In recent years, we have revised the CoPs and CfCs to reduce the regulatory burden on providers and suppliers. In doing so, we identified obsolete and burdensome regulations that could be eliminated or reformed to improve effectiveness or reduce unnecessary reporting requirements and other costs, with a particular focus on freeing up resources that health care providers, health plans, and States could use to improve or enhance patient health and safety. We also examined policies and practices not codified in rules that could be changed or streamlined to achieve better outcomes for patients while reducing burden on providers of care, and we identified non-regulatory changes that would increase transparency and allow CMS to become a better business partner.

These final rule provisions are a continuation of our efforts to reduce regulatory burden. We are finalizing changes to the current CoPs or CfCs that will simplify and streamline the current regulations and thereby increase provider flexibility and reduce excessively burdensome regulations, while also allowing providers to focus on providing high-quality healthcare to their patients. The final rule provisions will also reduce the frequency of certain required activities and, where appropriate, revise timelines for certain requirements for providers and suppliers and remove obsolete, duplicative, or unnecessary requirements. Ultimately, these requirements balance patient safety and quality, while also providing broad regulatory relief for providers and suppliers, and reducing the associated burden on patients.

2. Overall Impact

We have examined the impacts of the regulatory provisions to Promote Program Efficiency, Transparency, and Burden Reduction as required by Executive Order 12866 on Regulatory Planning and Review (September 30, 1993), Executive Order 13563 on Improving Regulation and Regulatory Review (January 18, 2011), the Regulatory Flexibility Act (RFA) (September 19, 1980, Pub. L. 96–354), section 1102(b) of the Social Security Act, section 202 of the Unfunded Mandates Reform Act of 1995 (March 22, 1995; Pub. L. 104–4), Executive Order 13132 on Federalism (August 4, 1999), the Congressional Review Act (5 U.S.C. 804(2)), and Executive Order 13771 on Reducing Regulation and Controlling Regulatory Costs (January 30, 2017).

Executive Orders 12866 and 13563 direct agencies to assess all costs and benefits of available regulatory alternatives and, if regulation is necessary, to select regulatory approaches that maximize net benefits (including potential economic, environmental, public health and safety effects, distributive impacts, and equity). Section 3(f) of Executive Order 12866 defines a ''significant regulatory action'' as an action that is likely to result in a rule: (1) Having an annual effect on the economy of $100 million or more in any 1 year, or adversely and materially affecting a sector of the economy, productivity, competition, jobs, the environment, public health or safety, or state, local or tribal governments or communities (also referred to as ''economically significant''); (2) creating a serious inconsistency or otherwise interfering with an action taken or planned by another agency; (3) materially altering the budgetary impacts of entitlement grants, user fees, or loan programs or the rights and obligations of recipients thereof; or (4) raising novel legal or policy issues arising out of legal mandates, the President's priorities, or the principles set forth in the Executive Order.

A regulatory impact analysis (RIA) must be prepared for major rules with economically significant effects ($100 million or more in any 1 year). We estimate that this rulemaking is ''economically significant'' as measured by the $100 million threshold, and hence also a major rule under the Congressional Review Act. Accordingly,

we have prepared an RIA that, to the best of our ability, presents the costs and benefits of these provisions of the rulemaking.

This final rule will create ongoing cost savings to providers and suppliers in many areas. Other changes we are finalizing will clarify existing policy and relieve some administrative burdens. We have identified other kinds of savings that providers and patients will realize throughout this preamble, and substantial lifesaving benefits. These life-saving effects arise by removing the incentives that were created by the current transplant center regulations to decline to transplant patients with slightly lower probabilities of success, or to decline to use organs with slightly lower probabilities of success.

We sought public comment on our burden assumptions and estimates as well as comments identifying additional reforms that should be considered for future rulemakings. As discussed later in this regulatory impact analysis, substantial uncertainty surrounds these estimates and we solicited comments on either our estimates of likely impacts or the specific regulatory changes that drive these estimates. We received, however, few comments specifically addressing our estimates. In the proposed rule, we solicited additional suggestions for things to consider that could potentially reduce burden for providers/suppliers in the future.

Comment: We received many submissions related to possible additional changes in CoP/CfCs to reduce burden. For example, we received a number of suggestions related to additional reforms regarding the removal of barriers to the use of nurse anesthetists that could be considered for future rulemakings.

Response: Thank you for all the comments that were submitted with suggestions on how we can improve the CoPs/CfCs. Some of the suggestions are burden reducing, however some of the suggestions would be burdensome. Regardless, we will take all the suggestions in to consideration for future rulemaking.

Comment: Several commenters expressed that costs or savings attributed to QAPI, infection prevention, recertification efforts, and emergency training may have been underestimated due to the exclusion of consideration for technology changes, or other factors, in the proposed rule estimates.

Response: We thank you for your comments and recognize the uncertainty involved in our estimates. Some of our estimates have been updated to reflect new information to the extent that we are able; however, we lack the data that would be necessary to make major adjustments to many of the estimates.

Comment: One commenter inquired about what happens with all the savings being estimated for each provider or supplier.

Response: The estimated savings from reducing burden for the providers/suppliers will allow the providers and suppliers to use those savings towards other necessary needs. We anticipate that they will have more time for patient care, and that the savings represent expenses that providers and suppliers will no longer have to incur now that we have finalized these proposals or made modifications. Some of these savings will be passed on to patients in reduced charges, but most will reduce costs charged to insurers, which will over time reduce insurance premiums to enrollees, public programs, and employer payers.

In the analysis that follows, we address the economic effects of all the major provisions of the final rule provisions. As pertinent, we indicate any significant changes from the proposed rule estimate. The analysis generally follows the typology used earlier in the preamble, and in the table that follows. As stated in the ICR section of the rule, we obtained all salary information from the May 2017 National Occupational Employment and Wage Estimates by the Bureau of Labor Statistics (BLS) at *https://www.bls.gov/oes/2017/may/oes_nat.htm* and calculated the total cost per hour by adding a cost of 100 percent for overhead costs and fringe benefits.

TABLE 13—SECTION-BY-SECTION ECONOMIC IMPACT ESTIMATES

Provider and supplier type and description of proposed provisions	Frequency	Number of affected entities	Estimated savings (annualized, $millions)
Religious Nonmedical Health Care Institutions:			
• Discharge Planning	As patients are discharged (Estimated 619 annual discharges).	18	(*)
Ambulatory Surgical Centers:			
• Governing Body and Management	Upon failed hospital transfer agreement attempts	5,557	(*)
• Patient Admission, Assessment and Discharge (History and Physical).	Every patient registration at an ASC or at a hospital outpatient/ambulatory surgery department.	5,557	77.
• Medical Records	Recurring annually	5,557	0.
Hospices:			
• Drugs and Biologicals, Medical Supplies, and Durable Medical Equipment***.	Recurring annually	4,602	94.
• Hospices That Provide Hospice Care to residents of a SNF/NF or ICF/IID.	Recurring annually	4,602	1.
• Hospice Aide and Homemaker Services	Recurring annually	4,602	2.
Hospitals:			
• Quality Assessment and Performance Improvement Program.	Recurring annually	4,823	31.
• Medical staff: Autopsies	Recurring annually	4,823	0.
• Infection Control	Recurring annually	4,823	115.
• Special requirements for hospital providers of long-term care services (“swing-beds”).	Recurring annually	478	30.
• Special Requirements for Psychiatric Hospitals.	Recurring annually	620	154.
• Patient Admission, Assessment and Discharge (History and Physical).	Every patient registration at an ASC or at a hospital outpatient/ambulatory surgery department.	4,823	77.
Transplant programs:			
• Various provisions related to performance**	Recurring annually	750	Not Quantified.

TABLE 13—SECTION-BY-SECTION ECONOMIC IMPACT ESTIMATES—Continued

Provider and supplier type and description of proposed provisions	Frequency	Number of affected entities	Estimated savings (annualized, $millions)
Home Health Agencies:			
• Patient rights	Recurring annually	12,624	57.
• Home health aide services	Recurring annually	12,624	Not Quantified.
• Clinical records	Recurring annually	12,624	Not Quantified.
Critical Access Hospitals:			
• Provision of Services	Recurring biennially	1,353	1.
• Organizational structure	Recurring annually	1,353	(*)
• Special requirements for CAH providers of long-term care services (''swing-beds'').	Recurring annually	1,246	77.
Comprehensive Outpatient Rehabilitation Facilities:			
• Utilization Review Plan	Recurring annually	188	(*)
Community Mental Health Centers:			
• Assessment Update	Recurring annually	52	(*)
Portable X-Ray Services:			
• Qualifications of X-ray technicians ***	Recurring annually	500	31.
• Removing written orders	Recurring annually	500	28.
RHC (4,160 clinics) & FQHC (7,874 center locations):			
• Patient Care Policies Review	Recurring biennially	12,034	4.
• Program Evaluation	Recurring biennially	12,034	5.
Emergency Preparedness for Providers and Suppliers:			
• Review of Emergency Preparedness Program.	Recurring biennially	56,983	70.
• Emergency Plan	Recurring annually	68,275	7.
• Training and Testing—Training Program	Recurring biennially	53,543	26.
• Training and Testing—Testing	Recurring annually	36,971	21.

* Amount is less than half a million dollars and rounds to zero.
** These include proposed changes to the following requirements: Special Requirements for Transplant Programs; Data submission, Clinical Experience, and Outcome Requirement for Re-approval of Transplant Programs; and Special Procedures for Approval and Re-Approval of Organ Transplant Programs.
*** This estimate is for first full year savings only and will differ in future years.

3. Anticipated Effects

a. Effects on Religious Nonmedical Health Care Institutions

As detailed in the Collection of Information section addressing these provisions, we reduced the discharge planning requirements for RNHCIs because RNHCIs do not provide medical treatment or services. Most patients are discharged to home or to another facility that also does not provide medical treatment or services. Although all patients must have a discharge planning evaluation, not all patients require a discharge plan. The discharge planning cost would be reduced by an estimated $22,903.

b. Effects on Ambulatory Surgical Centers and Hospital Outpatient/ Ambulatory Surgery Departments

As of May 2017 there were 5,557 Medicare-participating ASCs. We finalized our proposal to revise the ASC CfCs in order to reduce unnecessary duplications and streamline processes in order to reduce ASC compliance burden while maintaining minimum standards for patient safety and care. The specific savings for each change are described later in this section of the rule. At § 416.41(b)(3), we are removing transfer agreements and admitting privileges requirements and replacing it by mandating ASCs must periodically provide the local hospital with written notice of its operation and patient population served. This change eliminates the administrative burden associated with preparing an agreement for signature and going through the hospital credentialing process in order to obtain admitting privileges. Currently, all Medicare-certified ASCs are meeting the transfer agreement or admitting privileges requirement with the exception of approximately twenty ASCs that have tenuous relationships with their local hospital. We estimate the ASCs that do have difficulty with meeting this requirement would appreciate the annual burden savings of 2 to 4 administrator hours spent on paperwork and documentation. For those ASCs that already have transfer agreements with their local hospitals, the administrative burden is removed since transfer agreements and admitting privileges are eliminated, however, administrative burden is then replaced by the preparation and completion of the notice of operation requirement. For this reason, we have not assigned any additional burden created by the notice to the local hospital requirement. We estimate the savings at less than $10,000 overall and largely believe this change will not produce significant savings, however, it does affect twenty or more ASCs in the short term by removing the transfer agreement requirement. We welcomed any feedback related to the time and effort for those ASCs that have secured an agreement, and if we have underestimated the savings of removing this transfer agreement in the future. As previously discussed, the enactment of EMTALA and its increasingly effective enforcement over time has rendered these transfer and admitting privileges obsolete and unnecessary. To put this point in perspective, emergencies or other unforeseen adverse events can arise in any ambulatory medical or dental setting, or in home settings. Over time, ''911'' emergency calls and direct ambulance responses have become standard operating procedures virtually nationwide, regardless of the place in which the problem arose. Under modern procedures, emergency responders (and patients themselves) take patients to hospital emergency rooms without regard to prior agreements between particular physicians and particular

hospitals. Indeed, the most appropriate emergency treatment setting for a particular patient may not be one involving such an agreement, even where the agreement exists. Of course, nothing prevents particular arrangements where a hospital and ASC agree that this is beneficial for a particular type of surgery or patient condition and where patient transport can be appropriately arranged to reflect this. Accordingly, we estimate that there will be no consequential adverse health effects of this change, and therefore estimate no medical costs.

There will be competitive benefits in those places where an ASC will now be allowed to operate and provide care at reduced cost compared to inpatient treatment. Nonetheless, we believe that the number of affected areas and facilities are few, and that annual benefits are unlikely to reach the million dollar range. We sought comments on all these effects and on the preceding analysis of health effects and the majority of those we received agreed with our proposed reform.

At § 416.52 we are replacing the requirement that every patient must have a comprehensive H&P within 30 days prior to surgery in an ASC, with a requirement that allows the operating physician and ASC to determine which patients would require more extensive testing and assessment prior to surgery. We believe that this change reduces patient and provider burden in a multitude of ways that includes the community-based physician, the ASC, and the patient. We believe that in almost all situations ASCs can reasonably rely on existing H&P results that are more than 30 days old and then are updated by patient responses just prior to surgery.

For ASCs, we believe this change would reduce administrative burden by decreasing the amount of time that ASC personnel spend following up on patient visits to obtain the necessary H&P information and that it will provide for an increase in scheduling flexibility for the facility. We believe these changes may have the effect of improving patient satisfaction and increasing positive patient referrals for the ASC.

For community-based healthcare providers, to include primary care providers, we believe this change would reduce unnecessary examinations that are required to be performed and reduce administrative paperwork burden associated with providing ASCs with the necessary H&P documentation and additional testing requirements. This change may potentially provide an opportunity for increased access to community-based providers because of available appointments that are not being filled by unnecessary patient appointments for H&P requirements for surgery in an ASC. Those vacant appointments may also generate more revenue.

For patients, we believe this change reduces the time spent to prepare for surgery (time in community-based physician office, travel time and costs, time missed from the work place and lost productivity) and the cost associated with co-pays and other healthcare cost sharing requirements.

Finally, we believe this change reduces expenses for healthcare insurers to include Medicare, Medicaid, and private healthcare insurance companies. This change would reduce costs associated with reduced pre-operative exams, laboratory testing, chest radiographs, and echocardiograms.

In the proposed rule we stated that it is difficult to estimate the savings from this change, because they depend on a number of factors previously described, and additional factors for which we do not have precise measures, such as the number of patients (both Medicare and non-Medicare) who received two or more ASC services within the 30-day window allowed for one physical examination. This is a common occurrence because, for example, patients often receive cataract surgery on one eye and then, a week later, on the other eye. Furthermore, there are an immense number of different outpatient surgical services. At present, for example, there are about 137 services that account for about 90 percent of ASC volume, and these services are highly diverse, as shown in Table 14.

TABLE 14—TWENTY MOST FREQUENT ASC SERVICES IN 2015

Surgical service	Rank	Percent of volume
Cataract surgery w/IOL insert	1	18.6
Upper GI endoscopy, biopsy	2	8.2
Colonoscopy and biopsy	3	6.8
Lesion removal colonoscopy (snare technique)	4	5.6
Inject foramen epidural: Lumbar, sacral	7	4.8
After cataract laser surgery	6	4.4
Injection spine: Lumbar, sacral (caudal)	8	3.3
Inject paravertebral: Lumbar, sacral	9	3.1
Diagnostic colonoscopy	5	2.3
Colorectal screen, high-risk individual	10	2.0
Colorectal screen, not high-risk individual	12	1.9
Cataract surgery, complex	11	1.6
Injection procedure for sacroiliac joint, anesthetic	19	1.3
Cystoscopy	15	1.2
Upper GI endoscopy, diagnosis	13	1.0
Inject spine, cervical or thoracic	17	1.0
Revision of upper eyelid	16	0.9
Lesion removal colonoscopy (hot biopsy forceps)	14	0.8
Upper GI endoscopy, insertion of guide wire	18	0.8
Carpal tunnel surgery	20	0.7
Total		70.4

Source: MEDPAC. Ambulatory surgical center services. 2017, p. 140.

In total, ASCs provided about 6.4 million services in 2015 (MEDPAC. Ambulatory surgical centers services, 2017, p. 139). If we assume that 25 percent of these patients had two or more services within the 30-day

''window'' allowed in the current rule, then another H&P with its associated battery of tests were required for each of the remaining 4.8 million individuals. Assuming that 5 percent of these patients would otherwise have already had an overall H&P and associated tests within 30 days of the surgery, 4.56 million persons would then require a new H&P and tests before surgery under the current requirements. In the great majority of cases involving eye or eyelid surgery of one kind or another, the ophthalmology examination preceding the ASC surgery would not have involved a comprehensive H&P or battery of tests, and a similar situation would be involved for most other surgeries preceded by specialist rather than primary care visits.

Although we are unable to estimate the likely number of cases, one way to estimate the costs of these examinations and tests would be as follows. First, the H&P itself would cost approximately $100 (the exact amount depending on diagnostic details, and not necessarily corresponding to any particular payment schedule). The battery of tests would cost approximately $100, assuming both urine and blood testing, and, in some cases, an electrocardiogram, but only half of physical examinations (for example, few or no ophthalmologist exams) would include such tests. The travel of the patient to and from the physician office to obtain the examination and tests would on average require 1 hour, which when valued at the average wage rate in the economy of $24 (increased by 50 percent to include fringe benefits but not overhead) would cost about $36. In addition, ASCs incur substantial costs for the time and trouble needed to contact physician offices and arrange for the results to be delivered. The physician offices themselves would be put through the trouble of transferring those medical records. Assuming average time spent (the median would be less but a small number of difficult cases would bring the average well above the median) would reach 10 minutes, and the use of a general office clerk at $33 an hour, the cost per patient would average $5.50 per patient. A further cost arises because in many cases the examination and test results simply cannot be obtained timely, and a scheduled surgery has to be postponed. Assuming that in such cases a half hour of surgeon time (at $242 an hour) and a half hour of registered nurse (RN) time (at $71 an hour) is wasted, and that clerical time ($33 an hour) to reschedule averages 10 minutes, the average cost per postponement would be $162. (In some of these cases patient time would be wasted, as well as the time of family members accompanying the patient—we have not estimated these costs.)

Aggregating these calculations, one estimate of the annual costs of the current regulatory requirement, as shown in Table 15, could be as much as $908 million for ASCs and a similar amount for hospital outpatient surgery. For many and perhaps most cases, however, either the surgeon or the facility would decide that H&P information is needed for particular patients or particular procedures, whether or not this regulatory requirement existed. Of course, it is unlikely that in such cases a strict 30-day window would be insisted on. Assuming that such examination and testing information would continue to be needed for 10 percent of all patients, and that in half of these cases the information would require a new examination and tests within a 30-day window, the net costs of the regulatory reform we proposed would be 95 percent less than the preceding calculations.

As support for the proposed rule's 50 percent upper bound, the proposed rule preamble (83 FR 47733) noted that Chen et al. found that approximately 53 percent of Medicare cataract patients undergo pre-operative testing, none of which is mandated by CMS regulation.[2] If these patients' physicians are cautious enough to currently pursue more preoperative activity (for example, testing and H&P) than what is required, or state or hospital rules are driving physician behavior beyond what Medicare necessitates, then this study might be interpreted to suggest that there is little reason to believe that that behavior will change with the finalization of this rule. This study did not, however, address the 30-day time frame. We are unaware of any study or body of opinion suggesting that 30 days or any such arbitrary time limit can be medically justified, or that any providers would adhere to such a limit if not a regulatory requirement. The same points apply to other procedures performed in outpatient settings, even those such as hernia and plastic surgeries. In order to more successfully tailor the upper bound of potential cost savings to H&P activity—rather than just extrapolating from testing behavior—we requested comment on the possibility of building on Chen et al.'s data and methodology to estimate the increased frequency of within-30-day office visits (presumed to be H&P) when ophthalmologist visits are at least 31 days prior to surgery relative to when ophthalmologist visits are no more than 30 days prior. We received no comments supporting (or opposing) such an estimating procedure. Regardless, laboratory testing and physical examinations have no particular dependence on each other in terms of time or place. A physician, for example, can order a laboratory test for a patient without a physical examination at all, relying on a one or two year old examination or other information. Hence, the literature on the necessity of testing is not directly germane to the question of whether a routine physical examination should occur, with or without routine blood and urine tests. To take a common example, it is universal practice for highly detailed eye tests to be performed in the surgeon's office, a week or so before cataract surgery. It is that testing on that highly specialized equipment, not a recent physical examination or blood tests ordered by a general practitioner, that determines whether, how, and with what techniques and lens inserts the cataract surgery will be performed.

As noted in the medical literature previously discussed, Chung F, Yuan H, Yin L, Vairavanathan S, and Wong DT. Elimination of preoperative testing in ambulatory surgery. Anesth Analg. 2009 Feb, 108(s):467–75, there are no known consequential medical benefits from the testing often performed in association with the current regulatory requirements for general physical examinations. This study covered hernia patients but similar results have been found in studies of cataract surgery. Accordingly, eliminating the testing that occurs during or after H&P could in theory produce very substantial annual ASC cost savings with no offsetting medical cost increases or harm to patients. H&P itself, however, is distinct from testing, and literature indicating that testing is wasteful does not necessarily speak to the importance of H&P. There are, however, no known studies supporting the proposition that H&P procedures should be performed within 30 days of surgery to avoid adverse consequences to patients. We received no public comments making such a claim and the great majority of those addressing this issue recommended removing at least the 30-day rule, and usually the entire requirement.

[2] Chen CL, Lin GA, Bardach NS, Clay TH, Boscardin WJ, Gelb AW, Maze M, Gropper MA and Dudley RA, Preoperative Medical Testing in Medicare Patients Undergoing Cataract Surgery. New England Journal of Medicine 372:1530–1538, April 16, 2015.

In addition, Schein et al. and Bass et al. suggest that regulations play a prominent role in the persistence of low-value H&Ps and testing. They note that prior research indicates that it may often be the case that each member of a care team individually believes there is little value in preoperative testing for certain procedures, but those same individual physicians may fear that one or more of the other specialists or the institution may require certain tests.[3] [4] Therefore, the requirement for a preoperative H&P, especially within 30 days of a surgery, greatly increases the likelihood for miscommunication among the care team regarding what tests may or may not be required. It follows that the persistence of low-value testing may simply be due to our requirement for what are often low-value H&Ps, as opposed to an indication that care teams are consciously pursuing preoperative care beyond what Medicare requires, or that they would continue to do so in the absence of such a requirement.

As discussed in ''Provisions of the Proposed Regulations,'' section II.D. 2. of the proposed rule, there is a similar regulatory requirement for hospital outpatient surgery. Based on the substantial similarity between these two service settings, we also proposed to eliminate these requirements for such surgery. Although we do not have detailed data for hospital outpatient surgery, it is widely agree to be roughly equal in size and composition to ASC surgery, though spending is higher because a higher payment schedule is used by some insurers, including Medicare, for most hospital outpatient surgery. Regardless, estimates should be based on economic costs, not any particular payment schedules. Accordingly, potential total annual savings, and hence benefits, for both settings taken together could be as much as $1.7 billion or more. This would depend on whether hospital-based outpatient surgery decisions parallel those of independent ASCs.

If, after ASCs and hospitals make policy decisions on which types of outpatient/ambulatory surgery patients would continue to require a comprehensive H&P, and only 50 percent of current costs were continued, potential total annual savings, and hence benefits, for both settings taken together would be about $908 million, assuming that hospital-based outpatient surgery H&P policy decisions parallel those of independent ASCs. Alternatively, if 75 percent of current costs were continued, potential savings would be about $454 million annually. While the literature shows that we can be reasonably certain that for some procedures, such as cataract surgery, few or possibly even no costs would be self-imposed, there may be other procedures where ensuing policy decisions would retain all current history and physical requirements other than the strict 30-day rule. Because of the new requirements, and other uncertainties, the potential savings from lifting the current requirements encompass at least this broad range and quite possibly more. Because there was great uncertainty in these estimates as to future decisions by ASCs and hospital outpatient departments, we decided not to present a predetermined figure in the proposed rule. Instead, we requested public comments on all the parameters of our estimates to inform the estimates we would make in the final rule. We welcomed information on likely decisions in both ASC and hospital outpatient settings, and if possible for the most common procedures shown in Table 14 and for the likelihood and cost saving effects for procedure and patient categories where the facility chooses to retain an external H&P requirement, but extends the time window to a year or some other period that is far longer than 30 days. We did not receive any public comments on the dollar estimates but did receive a large number of public comments stating that the current H&P requirements in their entirety and/or the 30-day limit did not rest on any medical evidence of benefits to patients, and should be removed. Even those few comments supporting retention provided no medical evidence as to the necessity of applying either an H&P requirement or a 30-day requirement to most outpatient surgeries.

TABLE 15—CURRENT COSTS AND POTENTIAL ANNUAL SAVINGS FROM CREATING AND OBTAINING EXAMINATION AND TEST RESULTS

Type of cost	Unit cost	Number (M)	Current total cost ($M)	Twenty-five percent retained ($M)	Fifty percent retained ($M)	Seventy-five percent retained ($M)	Eighty-five percent retained ($M)
Physical Examinations	$100	4.56	$456	$114	$228	$342	$388
Test Batteries	100	2.28	228	57	114	171	194
Patient Travel Cost	36	4.56	164	41	82	123	140
Administrative Cost to ASC	5	4.56	23	6	11	17	19
Surgery Cancellations *	162	0.228	37	9	18	28	31
Total Cost, ASCs	.....	.....	908	227	454	681	772
Total Cost, Hospital Outpatient **	.....	.....	908	227	454	681	772
Total Cost	.....	.....	1,816	454	908	1,362	1,544
Total Savings	.....	.....	.....	1,362	908	454	272

* Based on information from a major ambulatory surgery facility, this estimate assumes that 5 percent of scheduled cataract operations are cancelled at the last minute since the required H&P information has not arrived from the physician office where the examination was performed and the tests ordered or performed. Staff salaries must still be paid. Our estimates assume one half hour of surgeon time wasted (at $242 an hour), one half hour of RN time wasted (at $71 an hour), and ten minutes of clerical time (at $33 an hour) to reschedule.

** Hospital outpatient savings assumed to be equal to ASC savings.

[3] Schein OD, Pronovost PJ. A Preoperative Medical History and Physical Should Not Be a Requirement for All Cataract Patients. J Gen Intern Med. 2017;32(7):813–814. doi:10.1007/s11606–017–4043–9.

[4] Bass EB, Steinberg EP, Luthra R, et al. Do Ophthalmologists, Anesthesiologists, and Internists Agree About Preoperative Testing in Healthy Patients Undergoing Cataract Surgery? Arch Ophthalmol. 1995;113(10):1248–1256. doi:10.1001/archopht.1995.01100100036025.

We assume that the one-time costs of developing such policies for hospital outpatient surgery in 4,823 Medicare-participating hospitals would be the same in the aggregate, though the mix of personnel used would be somewhat different and the cost at free-standing hospitals would likely be several times higher (for example, for involvement of the governing body and legal review). About 3,200 of these hospitals are in multi-hospital systems that would, however, reap economies of scale, and about 574 are psychiatric hospitals that we assume rarely perform surgery. In total, we estimate that, first year savings for both types of facilities would be $38 million less, regardless of the replacement rules that each facility imposed on itself.

There are possible alternatives, including limiting the regulatory reform to the lowest risk procedures, which would probably mean almost all procedures, excluding certain procedures from the regulatory reform, exempting ASCs, but not hospital outpatient departments, changing the 30-day requirement to something much longer in duration such as 6 months or a year, and likely others. Absent contrary evidence, however, we believe that relying on physician and facility judgment maximizes benefits and presents no consequential costs.

We welcomed comments on these estimates and on both the proposal and any alternatives, and particularly welcomed any evidence-based information that would inform both our ability to provide cost savings estimates and a policy choice between either the proposed reform or an alternative. We did not receive any public comments specific to our cost estimates or recommending any alternative reform.

In the proposed rule we stated that we could not forecast with any precision what medical specialty societies, ASC governing bodies, hospital governing bodies, or accreditation bodies would decide to do in replacing the current requirement. For these reasons, we did not forecast a specific level of cost savings in the proposed rule, and simply presented a range of from 25% to 75% (and possibly even higher or lower). The comments we received from a wide range of stakeholders suggest that there might be more ASCs than we anticipated that take advantage of the new flexibility to reduce either the numbers and types of procedures for which H&P would be required, or to expand the 30-day limitation to a greater time window, or both. Moreover, the largest organization deemed by CMS to provide standards at least equal to those of CMS, and allowed to accredit providers based on those standards, strongly endorsed replacing the current standard with one allowing procedure-specific medical judgment, as did several organizations representing professional societies or large provider organizations. There are, however, some organizations in some states and some providers that indicated they opposed any loosening of current restrictions. Our final rule would allow them to self-impose identical restrictions, and allow all affected providers to retain current restrictions for some categories of surgery.

As noted previously, in order to more successfully tailor the upper bound of potential cost savings, we built on Chen et al.'s methodology to estimate the increased frequency of within-30-day office visits (presumed to be H&P) when ophthalmologist visits are at least 31 days prior to surgery relative to when ophthalmologist visits are no more than 30 days prior (and thus aspects of their own medical examinations could be used to satisfy time-sensitive regulatory requirements). More specifically, we used Medicare fee-for-service claims data for procedures performed in hospitals on an outpatient basis or in ambulatory surgical centers; following Chen et al., we limited our 2017 data set to cataract surgeries performed on patients of at least age 66 and assumed office visits within 30 days prior to surgery were associated with H&P if the provider specialty was noted as general practice, anesthesiology, cardiology, family practice, internal medicine, geriatric medicine, nurse practitioner or physician assistant. The dependent variable in our logistic regression took the value 1 if an office visit, with a specialty as listed above, had been conducted within 30 days prior to cataract surgery and 0 otherwise. The key explanatory variable took the value 1 if an ophthalmologist visit (identified if the provider specialty was noted as ophthalmology) was within 30 days prior to surgery and 0 if it was at least 31 days prior. Control variables included patient year of birth, sex and race.

Using this methodology to model the probability that the dependent variable is equal to 1, the odds ratio of the key explanatory variable is 0.654 (95 percent confidence interval: 0.633–0.676). There are, however, several limitations to this method of analysis. Most notably, identifying ophthalmology visits by the physician specialty code proved to be unreliable, and it is unclear how many ophthalmology visits may have been missed because the physician specialty field was either blank or noted as unknown. We removed all beneficiaries from our analysis who underwent a cataract surgery in 2017, yet did not have any identifiable ophthalmology visits within that same calendar year, which limited our data set substantially.

Our overall estimate is that approximately 28 percent of cataract surgeries were preceded, within 30 days, by office visits. In the vicinity of a 28-percent rate, a roughly 8- or 9-percentage-point difference in rates yields an odds ratio of 0.654. Therefore, 8.5 percent will be used in the calculation of our primary savings estimate, with an upper bound on savings of 17 percent and a lower bound of zero.

c. Effects on Hospices

As of May 2017 there are 4,602 Medicare participating hospices. We are finalizing our revisions the hospice CoPs in order to reduce unnecessary duplications and streamline processes in order to reduce hospice compliance burden while maintaining minimum standards for patient safety and care.

At § 418.76(a) we finalized our proposal to defer to State training and competency requirements, where they exist, for hospice aides. Deferring to state requirements will streamline the hiring process because hospices would not have to verify that a job candidate's qualifications meet or exceed the Federal standard in addition to verifying that the candidate meets State requirements.

According to the BLS, 408,920 aides are currently employed in ''home care''. The term ''home care'' encompasses both home health agency and hospice employers. There are 12,624 HHAs and 4,602 hospices, meaning that hospices represent 27 percent of the ''home care'' employer market. Thus, we conclude that hospices employ 110,408 aides (27 percent of all aide positions in ''home care''). Based on an informal survey conducted by the largest hospice industry association, 76 percent of States have their own training and competency requirements, accounting for approximately 83,910 aide positions. Hospices in these states would benefit from the change because they would be permitted to rely on the completion of state mandated training and competency programs to assure that a candidate is qualified for employment, and would no longer have to take the additional step of verifying that each potential job candidate also meet the Federal requirements. We assume a 25 percent turnover rate based on discussions with industry experts, or 20,978 aide job listings per year. Based on an assumed 20 candidates that would require the qualifications verification per job

listing, we estimate that hospices must verify the training and competency program content and format for 419,560 candidates per year. We assume that it would take 10 minutes per candidate to verify compliance with the Federal requirements, for a total of 69,927 hours per year nationwide. At a cost of $33 per hour for a general office clerk to perform this check, we estimate that hospices will save $2,307,591 annually.

At § 418.106(a) we are finalizing our proposal to delete the requirement that a hospice must ensure that the interdisciplinary group confers with an individual with education and training in drug management as defined in hospice policies and procedures and State law, who is an employee of or under contract with the hospice to ensure that drugs and biologicals meet each patient's needs. Not requiring the specific pharmacy advisement function will allow for more streamlined interdisciplinary group meetings. We assume that 25 percent of hospices currently use their own staff (employee or contract) for this function, and that this staff member is typically the nurse member of the interdisciplinary group. The nurse member of the interdisciplinary group is also required by § 418.56(a); therefore we believe that removing this requirement will not result in removing the expertise from the group. Rather, we believe that removing this requirement will remove the formulaic approach to interdisciplinary discussions whereby the group allots time in each meeting specifically for this discussion in order to assure regulatory compliance. In the absence of regulation, the interdisciplinary group would have the authority to decide whether the discussion is pertinent for a given patient and the information can be woven into the discussion at large. This approach has the potential to reduce the overall group discussion time, particularly for the 3 members of the interdisciplinary group that are not charged with being the pharmacology expert. Based on 1.6 million hospice patients and an assumed 3 interdisciplinary group meetings per patient, there are a total of 4,800,000 interdisciplinary group meetings per year. We assume that each interdisciplinary group meeting includes 2 minutes of time specifically related to discussing the results of the pharmacy advisement service for purposes of complying with the regulation, or 160,000 hours per year nationwide. At a cost of $307 per hour ($203 physician + $55 social worker + $49 pastoral counselor (BLS Occupation code 21–1010)), we estimate that removing this requirement would save $49,120,000 annually. There are additional savings detailed in the Collection of Information section of $30,956,777 annually due to removing this requirement.

Additionally, we believe that this change will reduce the specialist nursing time spent specifically on advisement services. We believe that moving away from a regulatory compliance ''check box'' approach would allow the specialist nurse to incorporate medication management more seamlessly into regular clinical practice. The 2008 Hospice CoP final rule (73 FR 32088) estimated a 1 hour burden per patient for expert pharmacy services (30 minute initial advisement per patient + 2 15 minute update advisements) for a total cost of $71 per patient for all advisement services (updated to 2017 dollars). We estimate that this change will reduce that time by 50 percent, to 30 minutes per patient, resulting in a $35.50 per patient savings. Based on the assumption that 25 percent of hospices use their own employee to perform this function, we estimate that this reduction will occur for 400,000 patients nationwide (25 percent of 1.6 million hospice patients), for a total annual savings of $14,200,000.

Together with the previously stated estimates, total savings would be $49,120,000 + $30,956,777 + $14,200,000 million = $94,276,777 annually.

At § 418.112(f) we are finalizing our proposal to allow hospices and long term care facilities the additional flexibility to negotiate the format and schedule for orienting long term care facility staff regarding certain hospice-specific information. We believe that this will allow for innovation and streamlining, and reduce hospice compliance costs related to this requirement by 20 percent. For purposes of our analysis only, we assume that a typical hospice conducts 6 orientation sessions per year, and that each orientation requires 2 hours of time from a hospice nurse. At a cost of $71 per hour, a typical hospice would spend $852 each year to orient long term care facility staff. Assuming a 20 percent reduction in burden that can be achieved through innovation and streamlining, a typical hospice would save $170 a year, or $782,340 savings annually for all 4,602 hospices.

Taken together, these reforms will generate annual savings of approximately $97.4 million ($80.1 million for reduced interdisciplinary group meeting time + $14.2 million for reduced specialty nursing time + $2.3 million for streamlined hospice aide qualification requirements + $0.8 million for streamlined facility staff orientation). We requested public comment regarding these burden estimates, and additional regulatory reforms to reduce the burden of the hospice CoPs, but did not receive any comments specific to our solicitation.

d. Effects on Hospitals

As of 2017, there were 4,823 Medicare participating hospitals. We revised the hospital CoPs in order to simplify some requirements and streamline processes in order to reduce burden associated with hospital compliance with the Medicare CoPs while maintaining minimum health and safety standards. The specific savings for each change are described below.

At § 482.21, we are allowing for multi-hospital systems using a system governing body, as allowed under the CoPs, and that is legally responsible for two or more separately certified member hospitals, to have a unified QAPI program for the member hospitals subject to the system governing body. This will afford hospitals flexibility and the ability to gain efficiencies and achieve significant progress in quality by sharing best practices among all hospitals subject to the system governing body. This will be similar to current allowances for system governing bodies and unified medical staffs.

While there are no current requirements that explicitly prohibit the sharing of best practices across a system, the current requirements for each hospital to have its own separate and distinct QAPI program and Infection Control program certainly have inhibited and stifled sharing of best practices and innovations among individual hospitals within a system as we point out in the preamble to the proposed rule, and which we support with our reference to the Health Research and Educational Trust, in partnership with the American Hospital Association March 2010 publication entitled, ''A Guide to Achieving High Performance in Multi-Hospital Health Systems.'' This publication, along with positive public comments regarding unified medical staffs that we discussed in the May 2014 final rule and to which we refer in the proposed rule, clearly point to multi-hospitals more efficiently and effectively collecting, disseminating, and sharing innovations, solutions, and best practices for patient care to each of its member hospitals through these unified patient care programs.

Approximately 3,493 of the 4,823 Medicare-participating hospitals

participated in a hospital system in 2017 (American Hospital Association (AHA), *Fast Facts 2019 (https://www.aha.org/statistics/fast-facts-us-hospitals*)). According to the 2017 AHA Guide, there are 424 multi-hospital systems. The current regulatory burden for compliance with the QAPI program requirement is approximately $10,000 annually per hospital or $48.2 million annually for all 4,823 hospitals. If we were to allow a unified QAPI program for multi-hospital systems, this would remove 3,493 hospitals from the total 4,823 (replaced by the 424 multi-hospital systems) for a total of 1,754 hospitals/multi-hospital systems that would still need to comply. The new regulatory burden will be a total of approximately $17.5 million annually (1,754 × $10,000), for an annual total savings of approximately $31 million. We welcomed comments on the quantitative and non-quantitative portions of the preceding discussion and seek any empirical evidence that would improve the accuracy and thoroughness of the relevant benefits estimation, but did not receive any comments specific to our solicitation.

We are removing the requirement for hospitals at § 482.22(d), which states that a hospital's medical staff should attempt to secure autopsies in all cases of unusual deaths and of medical-legal and educational interest. Because this requirement is redundant and more detailed, specific requirements regarding medical-legal investigative autopsies are required by individual state law, we do not anticipate that hospitals would accrue additional savings from this change. The benefit to hospitals from eliminating this requirement is realized through a reduction in burden from no longer having to comply with two similar requirements of the Federal government and the State government. Hospitals would instead be required to follow the more detailed, specific regulations of the state in which they are located.

At § 482.42, we are allowing for multi-hospital systems using a system governing body as currently allowed under the CoPs, and that is legally responsible for two or more separately certified member hospitals, to have a unified infection control program for those member hospitals subject to the system governing body. This will allow hospitals flexibility and the ability to gain efficiencies and achieve significant progress in infection prevention and control. This would also be similar to current allowances for system governing bodies and unified medical staffs. The current regulatory burden for compliance with the Infection Control program requirement is approximately $183 million annually for all hospitals or $38,000 per hospital. If we were to allow a unified Infection Control program for multi-hospital systems, this would remove 3,493 hospitals from the total 4,823 (replaced by the 424 multi-hospital systems) for a total of 1,754 hospitals/multi-hospital systems that would still need to comply. The new regulatory burden would be a total of approximately $66.7 million annually (1,754 × $38,000), for an annual total savings of approximately $116 million, less the estimated cost of $1 million described in the Collection of Information Requirements section, for an annual net savings of approximately $115 million. We welcomed comments on the quantitative and non-quantitative portions of the preceding discussion and seek any empirical evidence that would improve the accuracy and thoroughness of the relevant benefits estimation.

At §§ 482.58(b)(1) and 485.645(d)(1) (cross-referenced long-term care requirement at § 483.10(f)(9)) we are removing the requirement for hospital and CAH swing-bed providers to provide the right for patients to choose to or refuse to perform services for the facility and if they so choose, (a) document in the resident's plan of care, (b) noting whether the services are voluntary or paid and (c) provide wages for the work being performed given the location quality, and quantity of work requiring comparable skills. We discuss the economic impact for this provision in the ICR section of this rule, which is estimated to be $29.4 million.

At § 482.58(b)(4) (and § 485.645(d)(4)) (cross-referenced long-term care requirement at § 483.24(c)), we are removing the requirement for hospital and CAH swing-bed providers to provide an ongoing activity program that is directed by a qualified therapeutic recreation specialist or an activities professional who meets certain requirements as listed at § 483.24(c)(2). We discuss the economic impact for this provision in the ICR section of this rule, which is estimated to be a savings of $73.5 million.

We are finalizing our proposal to remove the requirement at §§ 482.58(b)(5) and 485.645(d)(5) (cross-referenced long-term care requirement at § 483.70(p)) for hospital and CAH swing-bed providers to employ a qualified social worker on a full-time basis if the facility has more than 120 beds. Given that this provision is not applicable to either provider type due to the regulatory requirements for each, it does not impose a burden upon hospitals and as such, its removal will not result in a savings of burden hours or dollars.

At §§ 482.58(b)(8) and 485.645(d)(8) (cross-referenced long-term care requirement at § 483.55(a)(1)) we are removing the requirement for hospital and CAH swing-bed providers to assist in obtaining routine and 24-hour emergency dental care to its residents. We discuss the economic impact for this provision in the ICR section of this rule, which is estimated to be $2.9 million for all hospital and CAH swing-bed providers.

At § 482.61(d), we are finalizing our proposal to allow non-physician practitioners to document progress notes in accordance with State laws and scope of practice requirements. We believe that clarification of the intent of the regulation is necessary and will result in non-physician practitioners (specifically, physician assistants, nurse practitioners, psychologists, and clinical nurse specialists) documenting in the progress notes for patients receiving services in psychiatric hospitals. We estimate that MDs/DOs currently spend approximately 30 minutes documenting progress notes in psychiatric hospitals, and that 33 percent of this time would be covered by non-physician practitioners. Of the 4,823 Medicare participating hospitals, approximately 620 (or 13 percent) are psychiatric hospitals. According to AHA, there were 36,510,207 inpatient hospital stays in 2017, and therefore an estimated 13 percent of these stays were at psychiatric hospitals. The proposed change would result in a savings of $153.5 million (4,746,327 psychiatric hospital stays × 2 progress notes per stay × 0.5 hours of physician/psychiatrist time × $98 per hourly wage difference between physicians/psychiatrists ($198) and non-physician practitioners ($100, the average wage between nurse practitioners and physician assistants) × 33 percent of physician time spent writing progress notes covered by nonphysician practitioners). This savings is equivalent to $247,575 per psychiatric hospital per year.

Comment: We received a comment expressing concern over this estimate and whether the 30 minutes applies to each note, each patient per day, all patients per day, or some other measure; and that in any case, the total calculated amount of time spent on progress notes appears grossly underestimated.

Response: We thank you for your feedback and for calling this to our attention. We agree that our original estimate was low, and have revised our estimates to reflect 30 minutes spent on each note, assuming one progress note

per week during an average length of stay of 12 days per patient.

e. Effects on Transplant Programs and Patients

We are finalizing the proposed revisions unchanged. For the convenience of current readers we are also repeating, essentially unchanged, the data and analysis that indicate that the proposed (and hence final) rule would have substantial life-extending benefits, perhaps in the billion dollar a year range, but that we are unable to provide a robust estimate of their overall magnitude.

There are approximately 750 Medicare approved transplant programs in the United States, of which 250 are kidney transplant programs. All Medicare approved transplant programs must be a part of a Medicare approved hospital, and many hospitals have several types of organ programs. Oversight of these programs occurs in two major ways: By the Organ Procurement and Transplantation Network (OPTN), which is a non-profit membership-based organization operated under a Federal contract administered by the Health Resources and Services Administration (HRSA), and by CMS under the CoPs. The current and long-term OPTN contractor is the United Network for Organ Sharing (UNOS), which performs many transplantation functions, including matching donated organs to waiting lists of patients who have failing organs, and reviewing the performance of transplant centers on a variety of criteria, including patient and organ survival. There is a third mechanism encouraging better transplant program performance, the SRTR (accessed at *https://www.srtr.org*). The SRTR, also operated under a HRSA contract, provides detailed data on the performance of all transplant programs, and allows the OPTN, individual transplant programs, and patients themselves to compare results on such vital metrics as patient survival rates after transplant.

For patients with most types of organ failure, a transplant is the only option for long-term survival. In the case of kidney failure, however, kidney dialysis is a viable medium-term and sometimes long-term option for most patients. On average these patients can survive a dozen or more years on dialysis; however, without a transplant, they suffer increasingly high morbidity and mortality rates. We provide Medicare coverage for such patients through the ESRD program. Under the ESRD program, patients receive dialysis treatment, usually three times a week, through machines that cleanse their blood in much the same way as healthy kidneys would do. Since its inception in 1973, more than one million patients have received treatment under this program. Kidney failure patients are unique in another way: Unlike most other organs, with the partial exception of some liver donations, it is possible for living individuals to donate ''live'' kidneys, whether the living donor is a relative or an unrelated altruistic donor. In the case of ESRD patients, the Medicare ESRD program serves almost all kidney failure patients, regardless of age, and these patients receive costly dialysis for a prolonged period of time. As is the case for all CoPs, our regulations for Medicare-approved organ transplant programs have the potential to protect all patients, not just Medicare beneficiaries.

As discussed earlier in this preamble, we have long regulated transplant programs, but put in place additional CoPs in the March 2007 final rule (72 FR 15198) in an effort to increase the quality of care by specifying minimal health and safety standards. In addition, outcome metrics (1 year graft and patient survival) were included in the regulation and mirrored the OPTN outcomes metrics as calculated by the SRTR. Over time, increased emphasis on organ and patient survival rates, as key metrics of transplant performance, created incentives for transplant programs to select organs most likely to survive after transplant without rejection, and to select recipients most likely to survive after the transplant. In particular, due to the increasing patient and organ survival rates over time, the 2007 standards have become increasingly stringent over time as an artifact of the performance calculation method established in the 2007 rule, an outcome that was never intended by CMS. In addition, the 2007 rule created performance standards that focused only on organ and patient survival rates for those who received a transplant, not on survival rates of patients awaiting transplant. We refer readers to a discussion of this problem in the following CMS compliance Guidelines that could only partially lighten this unintended regulatory burden at *https://www.cms.gov/Medicare/Provider-Enrollment-and-Certification/SurveyCertificationGenInfo/Downloads/Survey-and-Cert-Letter-16-24.pdf*.

There is extensive literature on these incentives and other phenomena in transplant medicine that strongly suggests some unintended consequences on organ utilization (decreased use of ''marginal'' organs in their patients) and de-selection of some patients who are slightly less likely to survive for an extended period post-transplant. These unintended consequences have been anecdotal and measuring the extent to which they have occurred is difficult. In addition to the studies previously cited in the preamble (Adler et al., Schold et al., Dolgin et al., Stewart et al., Husain et al.), other studies on this issue include Kasiske B, Salkowski N, Wey A, Israni A, and Snyder J, ''Potential Implications of Recent and Proposed Changes in the Regulatory Oversight of Solid Organ Transplantation in the United States,'' *American Journal of Transplantation,* Volume 16, Issue 12, December 2016, pages 3371–3377; Howard R, Cornell D, and Schold J, ''CMS Oversight, OPOs and transplant centers and the law of unintended consequences, *Clinical Transplantation,* Volume 23, Issue 6, November/December 2009, pages 778–783; and Abecassis M, Burke R, Klintmaim G, Matas A, Merion R, Millman D, Olhoff K, and Roberts J, ''American Society of Transplant Surgeons Transplant Center Outcome Requirements—A Threat to Innovation,'' *American Journal of Transplantation,* Volume 9, Issue 6, June 2009, pages 1279–1286; and Schold J, Miller C, Mitchell H, Buccine L, Flechner S, Goldfarb D, Poggio E, and Andreoni K, ''Evaluation of Flagging Criteria of United States Kidney Transplant Performance: How to Best Define Outliers,'' *Transplantation,* June 2017, Volume 101, Issue 6, pages 1373–1380. These studies regarding the reduced number of transplants that would otherwise have occurred, yielded several relevant facts. The number of deceased donor organs that are discarded has been increasing over time and for kidneys, is above 20 percent. For example, about 33 percent of kidneys recovered from donors age 50 to 64 are discarded, as are about 62 percent of kidneys recovered from donors age 65 or older (Hart A et al., OPTN/SRTR 2015 ''Annual Data Report: Kidney.'' Accessed at *http://onlinelibrary.wiley.com/doi/10.1111/ajt.14124/full*). Officials of the UNOS have stated at public meetings that in their judgment up to 1,000 kidneys of the approximately 3,000 that are discarded each year are of good enough quality to be transplanted successfully. The number of organ transplantations reached record highs in 2016 (33,500), about 20 percent more than 5 years earlier, due mainly to increased donation rates (OPTN, ''United States organ transplants and deceased donors set new records in 2016.'' Accessed at *https://optn.transplant.hrsa.gov/news/us-organ-transplants-and-deceased-donors-set-new-records-in-2016/*).

For purposes of this analysis, one approach to estimating effects is to isolate the number of kidneys (and other organs) that have been discarded as a result of the March 2007 rule; indeed, a reasonable assumption would be that the proposed rule's rescission of the 2007 requirements would have an equal and opposite effect. A slide presentation by UNOS researcher Darren Stewart (2017; accessed at *https://www.myast.org/sites/default/files/ceot2017/AST%20CEOT%2001%20Stewart%20-%20No%20Organ%20Left%20Behind%20-%20S3.pdf*), presents an estimate that about 1,110 of about 2,759 kidneys discarded in 2012 were of transplant quality and that between 500 and 1,000 of these could have been used in transplants (the most recent discard numbers, for 2016, are about 20 percent higher than in 2012 and one-third higher than in 2007). This presentation cites the study previously discussed in this preamble (Stewart et al. (2017)), that shows kidney discard rates rising from between 5 and 7 percent in the late 1980s to 19.2 percent in 2015. Notably, the discard rate had already reached approximately 18 percent by 2007, making the rate of increase much lower after the March 2007 rule was implemented than it had been in the previous two decades. Although this contrary evidence is far from definitive, it suggests that the effect of the March 2007 rule was too small to be observable in the kidney discard data.

Unfortunately, these and other studies have had to deal with other trends during the last two decades that greatly complicate measuring the independent effect of the 2007 rule. These include the increasing age of the donor pool and the attendant decline in some dimensions of organ quality, and the opposite effects of improved techniques for maintaining organ quality between the time of donation and the time of transplantation. As a result, the published studies using data on organ discards have had to use complicated multivariate statistical procedures in attempting to estimate the effects of the 2007 rule, and invariably conclude that their findings are subject to considerable uncertainty.

The preceding analysis focuses on discard rates as a tool that transplant programs can use to reduce risk of lower patient or organ survival rates, and hence risk of closure under the 2007 rule. A second tool that a transplant program can use to reduce its risk of lower overall patient survival rates is to remove patients who are slightly less likely to survive from its waiting list, most commonly by making a judgmental decision that the patient is ''too sick for transplantation.'' Programs that are on the margin of receiving regulatory sanctions, or that have received such sanctions already, are particularly likely to exercise such judgments to reduce regulatory risk. Several studies have estimated specific numbers of transplant reductions due to the 2007 rule by comparing the number of patients removed from the waiting list at programs that have received regulatory sanctions to those that have not. To provide a baseline, these studies make the conservative assumption that those programs with zero sanctions have not removed any patients from their transplant waiting list in order to avoid sanctions. For kidneys, one study estimated that in the seven year period from 2007 to 2014, the lower performing programs removed from waiting lists over 2500 patients more than would have been expected absent sanctions, an average of over 350 per year (J.D. Schold et al., ''Association of Candidate Removals From the Kidney Transplant Waiting List and Center Performance Oversight,'' American Journal of Transplantation 2016, 1276–1284). The implications, for the present time, of wait list changes initiated in 2007 is unclear. Increased mortality in 2007 among the very sick patients who were dropped from the wait list would have freed up organs for 2007's moderately sick patients; these patients otherwise would have declined in health so as to be the very sick population in 2008. Thus the absolute level of health in 2008 would have been relatively good, in which case the phenomenon of patients being dropped from the wait list might not have perpetuated into the future, leaving little or no scope for benefits to be achieved now as a result of the proposed CoP revision. (We note that one year, from 2007 to 2008, may be an exaggeration as to the short-term nature of this wait list-related effect, but a somewhat longer tapering period could still have reached completion now, more than a decade after the implementation of the 2007 CoP, thus leaving little scope for benefits.) On the other hand, if the sickest patients in 2008 were dropped based on their relative health levels—in spite of their improved absolute health relative to the sickest patients in 2007—there would be potential wait list-related benefits from revising this CoP at the present time. The benefits of shifting transplants to the sickest patients from relatively less sick patients have not been quantified, but because the harm to the less sick patients would need to be netted off the benefit to the sickest patients, the per-transplant magnitude would be much lower than the per-transplant benefits of avoided organ discards.

Another quantitative study of kidney transplant effects used a similar methodology and estimated that as a result of the 2007 rule, in 2011 sanctioned programs performed 766 fewer kidney transplants than would otherwise have been the case.[5] White et al.'s finding of reduced transplant volumes at particular kidney transplant centers does not necessarily indicate decreased transplant volumes overall, with the authors stating that their aggregate results ''do not indicate that the introduction of the [2007] CoPs has systematically reduced opportunities for marginal candidates or that there has been a systematic shift away from utilization of higher risk deceased donor kidneys.'' In other words, regulatory sanctions could have triggered behavioral responses by some patients, some transplant surgeons, or some health insurance plans to shift patients away from these centers (many insurers restrict coverage through ''centers of excellence'' programs). Schold et al. (2013) find additional support for this phenomenon, describing their empirical result as follows: ''Among 203 [adult kidney transplant] centers, 46 (23%) were low performing (LP) . . . Among LP centers, there was a mean decline in transplant volume of 22.4 cases compared to a mean increase of 7.8 transplants among other centers.'' The estimated decrease per low-performing transplant center is roughly three times the increase per other center, but there are also roughly three times as many other centers as low-performing centers; as such, the most straightforward interpretation of this paper is that the same number of transplants is being concentrated in a smaller number of transplant centers. This outcome could still have real impacts, such as changes in travel time for patients, but although these impacts are valid for inclusion in a regulatory impact assessment, they would be much smaller in magnitude than the longevity benefits emphasized elsewhere in this analysis.

A feature common to most of these studies that is that they use data that are already several years old when the study is published, both because of the usual publishing lag and because performance data such as one-year survival rates necessarily make transplant program results less timely. None of these studies covers the last two

[5] Sarah L. White et al., ''Patient Selection and Volume in the Era Surrounding Implementation of Medicare Conditions of Participation for Transplant Programs,'' Health Services Research, April 2015, 330–350.

or three years of transplant program performance. As a result, none of these studies has been able to use actual data to assess the effects of the May 13, 2016 CMS changes that slightly reduced the performance level for finding a ''condition-level'' violation that threatens program closure. For recent reviews of potential effects of those changes see BL Kasiske et al, Potential Implications of Recent and Proposed Changes in the Regulatory Oversight of Solid Organ Transplantation in the United States,'' Am J Transplant, December 2016, 16(12), 3371–3377, and Colleen Jay and Jesse Schold, Measuring transplant center performance: The goals are not controversial but the methods and consequences can be, Curr Transplant Rep, March 2017, 4(1), 52–58. Using past data to measure potential effects, these studies predict little or no positive effect from the revised standards (which both studies conclude will still mis-identify lower performing programs), but cannot evaluate actual effects because post-issuance evidence is not yet available. This may not be relevant policy-wise, since we proposed to eliminate those standards, but it is a key question for estimating the remaining scope (if any) of CoP-associated unnecessary organ discards, and it does flag the pervasive problem of timeliness of data and timeliness of study findings.

There are several studies that make similar estimates for liver transplant programs (for example, L.D. Buccini, et al., ''Association Between Liver Transplant Center Performance Evaluations and Transplant Volume,'' American Journal of Transplantation 2014, 2097–2105). This study found a large difference in transplant volume between programs rated as lower performing by the SRTR (average decrease of 39.9 transplants from 2007 to 2012) and those not receiving adverse SRTR ratings (average increase of 9.3 transplants over the same period). The 27 lower performing centers thus reduced their total number of liver transplants by over 1,000, and compared to the higher performing centers the decrease was even larger. This study did not, however, tie its estimates to the performance standards in the 2007 rule (which are similar but not identical to SRTR standards), to sanctions under that rule, or to specific center decisions, such as removing candidates from the wait list. Hence, while it certainly contributes to the body of scholarship indicating that since 2007 transplants have been performed in a more concentrated set of programs, it does not appear to provide direct estimates of the quantitative effects of the 2007 rule on overall numbers of liver transplants.

Taking into account all the various uncertainties involved in these studies, we did not and do not believe that we can estimate the effects of the 2007 rule on numbers of transplantations for any organ other than kidneys, and that even for kidneys there is no clear central estimate of likely quantitative effects. The wide variation in published results, and the disclaimers as to the various uncertainties involved, make a precise as well as reliable estimate all but impossible and would render arbitrary any non-zero lower bound estimate of health and longevity impacts. (As noted above, however, even in the absence of health and longevity effects, there may be other benefits, such as reduced travel costs, if the proposed rule reduces concentration of transplants in a smaller number of facilities.) Therefore, we have shown the effects of the final rule change as ''not quantified.'' This is not unusual in regulatory impact analyses that address complex phenomena that cannot be measured directly, or whose effects are intertwined with other changing circumstances.

Every transplant quality organ that is used for transplantation rather than discarded has a very high probability of substantially extending the life of the recipient. There is a particularly extensive literature on life expectancy before and after transplant, quality of life, and cost savings for kidney patients. A literature synthesis on ''The Cost-Effectiveness of Renal Transplantation,'' by Elbert S. Huang, Nidhi Thakur, and David O. Meltzer, in Sally Satel, *When Altruism Isn't Enough* (AEI Press, 2008) found essentially universal agreement that kidney transplants were not only substantially life extending, but also cost reducing. The authors performed an extensive literature search and found that from 1968 to 2007 seventeen studies assessed the cost-effectiveness of renal transplantation. The authors concluded that ''Renal transplantation . . . is the most beneficial treatment option for patients with end-stage renal disease and is highly cost-effective compared to no therapy. In comparison to dialysis, renal transplantation has been found to reduce costs by nontrivial amounts while improving health both in terms of the number of years of life and the quality of those years of life'' (page 31). More recent studies have reached similar conclusions, as have other syntheses. For example, the ''Systematic Review: Kidney Transplantation Compared with Dialysis in Clinically Relevant Outcome'' (M. Tonelli, N. Wiebe, G. Knoll, A. Bello, S. Browne, D. Jadhov, S. Klarenbach, and J. Gill, American Journal of Transplantation 2011: 2093–2109) focused on life expectancy and quality of life. This article reviewed 110 studies, and concluded that the vast majority showed major improvement in life quality and reductions in mortality among transplant recipients compared to those remaining on dialysis. The *Annual Data Report* of the United States Renal Data System utilizes national data on ESRD, and reports that deaths per 1,000 patient years are about 180 for dialysis patients and about 32 for transplant recipients (see 2016 report, volume 2, Figure i.13 and Tables H.4 and H.10); accessed at *https://www.usrds.org/adr.aspx*). There are similar data on other organs. For example, in 1998, HHS published a final rule with comment period that established governance procedures for the OPTN (63 FR 16296). In the RIA for that rule, the Department estimated that ''the annual benefits of organ transplantation include about eleven thousand lives vastly improved by kidney transplantation, and another eight thousand lives both vastly improved and prolonged by transplantation of other major organs'' (63 FR 16323).

Even without a robust aggregate estimate of likely increases in organ utilization as a result of this proposed regulatory change, the potential benefits are very substantial. For each new kidney transplantation, there would be an average of 10 additional life years per transplant patient compared to those on dialysis (see Wolfe A et al., ''Comparisons of Mortality in All Patients on Dialysis, Patients on Dialysis Awaiting Transplantation, and Recipients of a First Cadaveric Transplant,'' NEJM, 1999, 341:1725–30; accessed at *http://www.nejm.org/doi/full/10.1056/NEJM199912023412303#t=article*). Valuing each year of life gained using a ''value of a statistical life year'' (VSLY) of $490,000 in 2014 dollars, the total benefits from each additional transplantation in 2018 would be $4.9 million before discounting and $4.4 million after inflating to 2016 dollars and discounting at either 3 or 7 percent over the 10-year period (life-year figure for 2014 from Office of the Assistant Secretary for Planning and Evaluation, HHS, Guidelines for Regulatory Impact Analysis, 2016, page 21, accessed at *https://aspe.hhs.gov/pdf-report/guidelines-regulatory-impact-analysis*). The HHS methodology produces the same result at either discount rate in order to reach the same predetermined ''real'' value. For an explanation and

justification of this VSLY approach, see Cass R. Sunstein, ''Lives, Life-Years, and Willingness to Pay,'' 104 Columbia Law Review [i] (2004).

Those HHS guidelines also explain in some detail the concept of quality adjusted life years. The key point to understand is that these are research-based estimates of the value that people are willing to pay for life-prolonging and life-improving health care interventions of any kind (see sections 3.2 and 3.3 of the HHS Guidelines for a detailed explanation). The QALY amount used in any estimate of overall benefits is not meant to be a precise estimate, but instead is a rough statistical measure that allows an overall estimate of benefits expressed in dollars.

An alternative and more sophisticated analysis would take into account that the life-extending effect of a kidney transplant is not its first effect, but typically follows a number of years off dialysis, until the organ fails and the patient returns to dialysis or is retransplanted. Such an analysis can be found in a recent study by P.J. Held et al., ''A Cost-Benefit Analysis of Government Compensation of Kidney Donors,'' American Journal of Transplantation, 2016, pages 877–885 (plus 65 pages of supplementary details explaining all assumptions, data sources, and calculations). The largest differences between the base case estimated in that study and the preceding estimates is that this RIA uses the considerably higher value of a statistical year of life under HHS guidelines, and this RIA uses the full value of a statistical life year without a ''quality'' adjustment for the added years of life (we use QALYs only for the improved quality of life during years that would otherwise be on kidney dialysis). Under such an estimation approach, potential life-extending benefits could be somewhat larger. For example, if the proposed reform increased the number of life-extending kidney transplants by only 100 a year, and the benefits of both additional life years and QALY gains were estimated at $5.1 million per patient, its total annual benefits for kidney patients would be approximately $510 million a year (100 × $5.1 million).

There are additional benefits from kidney transplantation. As previously discussed, kidney transplants do reduce medical costs, with ''breakeven'' after about 5 years and net savings of several hundred thousand dollars per patient. Other organ transplants create lesser or no medical savings because the alternative is not dialysis. Clearly, however, these kidney transplant savings are small in relation to the life-extending benefits. We have not estimated medical savings or costs for kidneys or other organs in this RIA because any such estimates would depend on the number of additional transplants that we have not estimated.

We note that life-extending estimates are averages across patients who vary widely in age, medical condition, and life expectancy, as well as type of organ failure. For example, the sickest patients typically have very low life expectancies without transplant, and hence stand to gain the most years of life from a transplant. Partly offsetting this, these same patients, on average, have slightly lower survival rates post-transplant. Organ and patient survival issues are complex and dealt with by detailed policies and procedures developed and used by the transplant community under the auspices of the OPTN. These policies are reviewed and revised frequently based on actual experience and changing technology—over time the success rate from previously marginal organs, and in older patients, have both increased substantially. For purposes of this analysis, the proper measure is the average gain across all patients who would receive transplants as a result of eliminating the 2007 rule, net of these other factors.

There could be potential offsets to these calculated and uncalculated benefits and cost reductions. However, the particular regulatory requirements we proposed to remove are unlikely to drive any further significant increases in graft and patient survival. For renal transplants, the expected 1-year graft and patient survival rates are already at 95 percent or better. Transplant program outcomes will continue to be monitored by the OPTN and programs that are not in compliance with the OPTN outcomes are referred to their Membership and Professional Standards Committee for quality improvement activities. The SRTR also publishes detailed data on transplant program performance that allows patients and their physicians to compare transplant programs and this transparency creates pressures to maintain and improve survival rates in order to attract these patients.

The current regulatory requirements for transplant centers, as discussed in section II.E ''Transplant Centers'' of the proposed rule, have created both positive and adverse incentives for transplant programs, with unanticipated side effects on both utilization of donated organs and the ability of the highest risk patients to obtain transplants. We expect the changes made by this final rule to provide substantial net benefits, particularly since other regulatory and informational incentives remain in place.

We requested comments on this analysis as well as information that would enable a more robust quantitative analysis of the impacts of this change and on any alternative reforms that might provide even higher benefits. We did not, however, receive comments specifically addressing these requests.

f. Effects on HHAs

As of May 2017 there are 12,624 HHAs that participate in Medicare and Medicaid. In the January 2017 HHA CoP final rule (82 FR 4504) we estimated that compliance with the requirements at § 484.50(a)(3) related to providing oral notice of all rights to each patient would impose a burden of 5 minutes per patient, or 1,330,246 hours of burden nationwide at a cost of $80,030,370, annually. The cost estimate was based on a $63 per hour estimate for the services of a RN as derived from the BLS Occupational Handbook, 2014–2015 edition, including a 100 percent benefit and overhead package. Adjusted to reflect more updated salary information, as described previously, we estimate that compliance with this provision would impose a $94,447,466 burden, based on a RN earning $71 per hour.

We proposed to revise the verbal notification requirements to limit them to those that are required by section 1891 of the Act. Limiting the amount of information that is required to be provided orally will reduce the time per patient that is required to comply with the revised requirement. For purposes of this analysis only, we assume that providing oral notice regarding financial liability only will require 2 minutes per patient, reducing burden by 60 percent. Based on this assumption, this proposed change would reduce the burden of the patient rights notification requirement by 198,148 hours (1,330,246 hours originally estimated × 0.6) and $56,668,480 ($94,447,466 burden as updated to reflect more recent salary estimates × 0.6).

We are also finalizing three changes that do not have a savings estimate. First, we are eliminating the requirement at § 484.80(h)(3) that the HHA conduct a full competency evaluation of deficient home health aides, and replace it with a requirement to retrain the aide regarding the identified deficient skill(s) and require the aide to complete a competency evaluation related to those skills. As we stated in the January 2017 HHA CoP final rule (82 FR 4575), it is standard practice within the HHA industry to supervise home health aides, and the regulatory requirements for such

supervision do not impose any additional burden. We are also finalizing a change to permit HHAs to use either patients or pseudo-patients when conducting home health aide competency evaluations. While this change does not have a monetary savings estimate, we believe that this additional flexibility will increase the speed for aides completing their competency evaluations, thus increasing the pool of aides eligible to provide services and reducing patient wait times for aide services.

We requested public comment regarding these burden estimates, and additional regulatory reforms to reduce the burden of the HHA CoPs, but did not receive any specific to our burden estimates. Comments regarding additional regulatory reforms to reduce the burden on HHAs are addressed earlier in the preamble.

g. Effects on CAHs

We proposed to remove the requirement at § 485.627(b)(1) for CAHs to disclose to CMS its owners or those with a controlling interest in the CAH or any subcontractor in which the CAH directly or indirectly has a 5 percent or more ownership interest in accordance with 42 CFR part 420, subpart C. We discuss the economic impact of this provision in the ICR section, which is estimated at $143,701 in total savings for all CAHs. We also discussed the burden reduction for our proposed revision of the ''patient care policies'' requirements imposed on CAHs in the ICR section of this rule, which is estimated at $2.6 million. Finally, the effects of the CAH swing-bed provisions are covered in the ICR section of the rule, and estimated to be $76.5 million for all CAHs.

h. Effects on CORFs

We discussed the burden reduction for our proposed revision of the ''utilization review plan'' requirements imposed on CORFs in the ICR section of this rule, which is estimated at $315,840.

i. Effects on CMHCs

We discussed the burden reduction for our proposed revision of § 485.914(d)(1) ''update of the comprehensive assessment'' requirements imposed on CMHCs in the ICR section, which is an estimated savings of $156,975.

j. Effects on Portable X-Ray Services

At § 486.104 we proposed to revise the portable x-ray CfCs to focus on the qualifications of the technologist performing the diagnostic test. As of May 2017 there were approximately 500 Medicare-participating portable x-ray suppliers employing an estimated 5,000 portable x-ray technologists. Hiring limited x-ray technologists or those with State licensure would allow portable x-ray suppliers to fill vacant positions at a lower hourly cost. Assuming a 10 percent annual turnover rate, all technologists could be hired at the lower salary over a period of 10 years. Limited x-ray technologists can be hired for approximately $30 an hour ($62,400 per year), whereas, according to the BLS, x-ray technologists with advanced certification (ARRT) are hired at a rate of approximately $60 dollars per hour ($124,800 per year). This creates a savings opportunity of $30 per hour, or $62,400 per year, per technologist position. Based on an assumed 10 percent turnover rate, or 500 positions filled in any given year, this change would create a savings of $31,200,000 savings in the first year. We believe that these savings would be increased every year as more positions are filled at the lower salary rate.

We discuss the economic impact for the requirements regarding written orders in the ICR section of this rule, which represents $27.7 million in savings.

We requested public comment regarding these burden estimates, and additional regulatory reforms to reduce the burden of the portable x-ray CfCs, but did not receive any comments specific to our solicitation.

k. Effects on RHCs and FQHCs

We discussed the burden reduction for our revision of § 491.9(b)(4) ''review of patient care policies'' requirements imposed on RHCs and FQHCs in the ICR section, which is an estimated savings of $7.3 million biennially, or approximately $3.7 million annually.

In addition, the burden reduction for our revision of § 491.11(a) ''program evaluation'' requirements imposed on RHCs and FQHCs in the ICR section of this rule, which is an estimated savings of $9.9 million biennially, or approximately $5 million annually.

l. Effects of Emergency Preparedness Requirements on Providers and Suppliers

The revisions to the emergency preparedness requirements for Medicare and Medicaid participating providers and suppliers, as discussed in section II.M, either simplify the requirements, eliminate duplicative requirements, or reduce the frequency in which providers would need to comply with the emergency preparedness requirements. We estimate that the finalized changes to the emergency preparedness requirements would accrue an annual cost savings of $124 million in total. The potential, estimated cost savings for each revised emergency preparedness requirement is outlined in detail below. The methodology used to calculate the economic impact and the costs associated with the changes to the emergency preparedness requirements is the same methodology used to calculate the economic impact in the Emergency Preparedness final rule (81 FR 63860).

At § 482.15(a), (b), (c), and (d) for hospitals and parallel regulatory citations for other facilities, we are finalizing our proposal for all providers, except LTC facility providers, to review their program at least every 2 years. We discuss the economic impact for this requirement in the ICR section of this rule, which represents annualized cost savings of $69,639,324, or approximately $139 million biennially.

At § 482.15(a)(4) for hospitals, and other parallel citations for the facilities mentioned in section II.J.2 of the rule, we eliminated the requirement that facilities document efforts to contact local, tribal, regional, State, and Federal emergency preparedness officials and that facilities document participation in collaborative and cooperative planning efforts. We discuss the economic impact for this requirement in the ICR section of this rule, which represents $7,319,255 in savings.

At § 482.15(d)(1)(ii) for hospitals, and other parallel citations for other facilities mentioned in section II.J.2 of the rule, we are finalizing our proposal for all providers, except LTC facilities, to require that facilities provide training biennially, or every 2 years, after facilities conduct initial training on their emergency program. In addition, we are requiring additional training when the emergency plan is significantly updated. We discuss the economic impact for this requirement in the ICR section of this rule, which represents annualized cost savings of $25,593,781, or approximately $51 million biennially.

Finally, at § 482.15(d)(2), we are finalizing our proposal to require that providers of inpatient services mentioned in section II.J.2 of the rule conduct two testing exercises annually, one of which may be an exercise of their choice that must be either a community-based full-scale exercise (if available), an individual facility-based functional exercise, a drill, a tabletop exercise or workshop that includes a group discussion led by a facilitator. We are requiring that providers of outpatient services mentioned in section II.J.2 of

the rule conduct one testing exercise annually which must be either a community-based full-scale exercise (if available) or an individual facility-based functional exercise every other year, and in the opposite years, may be either a community-based full-scale exercise (if available), a facility-based functional exercise, a drill, or a tabletop exercise or workshop that includes a group discussion led by a facilitator. We discuss the other economic impacts for this requirement in the ICR section, which represents $9,296,422 in savings. We do not estimate any economic impact for the providers of inpatient services as we did not propose any changes to the number of testing exercises that must be conducted by these providers; however, we estimate an additional economic impact for this provision for each outpatient provider due to a reduction in the testing requirement from two exercises per year to one exercise per year. We would like to note that for CORFs and Organizations, consistent with the Emergency Preparedness Final Rule (*Medicare and Medicaid Programs; Emergency Preparedness Requirements for Medicare and Medicaid Participating Providers and Suppliers; Final Rule,* 81 FR 63860), the CoPs for these providers previously required them to have ongoing drills and exercises to test their disaster plans. Therefore, we continue to expect, as we did in the Emergency Preparedness final rule, that the economic impact to comply with this requirement will be minimal, if any. Therefore, the total economic impact of this provision for CORFs and Organizations will be limited to the estimated ICR burden of $56,212 and $310,362, respectively.

We estimate a total impact savings of $11,238,093 for this change. With an estimated ICR savings of $9,296,422, we estimate that the total economic impact of this policy for the affected providers will be $20,534,515. We list a summary of the calculation for the impact savings accrued by removing this requirement for each facility in Table 16, based on facility numbers available as of May 2017.

- *ASCs:* Combined total savings of $2,000,520 for 5,557 ASCs ((4 hours for an administrator at $109 per hour plus 4 hours for a registered nurse at $71 per hour) × 5,557 ASCs × 50 percent).
- *Outpatient Hospice:* Combined total savings of $1,438,240 ((4 hours for an administrator at $107 per hour plus 4 hours for a registered nurse at $71 per hour) × 4,040 outpatient hospices × 50 percent).
- *PACE:* Combined total savings of $16,543 ((1 hour home for a care coordinator at $71 per hour plus 1 hour for a quality improvement nurse at $71) × 233 PACEs × 50 percent).
- *HHAs:* Combined total savings of $2,695,224 ((2 hours for an administrator at $107 per hour plus 3 hours for a director of training at $71 per hour) × 12,624 HHAs × 50 percent).
- *CMHCs:* Combined total savings of $60,214 ((5 hours for an administrator at $107 per hour plus 3 hours for a nurse at $71 per hour) × 161 CMHCs × 50 percent).
- *OPOs:* Combined total savings of $5,162 ((1 hour for a QAPI Director at $107 per hour plus 1 hour for an education coordinator at $71 per hour) × 58 OPOs × 50 percent).
- *RHCs/FQHCs:* Combined total savings of $4,284,104 (((4 hours for an administrator at $107 per hour plus 4 hours for a registered nurse at $71 per hour) × 4,160 RHCs × 50 percent) $1,480,960+ (4 hours for an administrator at $107 per hour plus 4 hours for a registered nurse at $71 per hour) × 7,874 FQHCs × 50 percent) 2,803,144.
- *ESRDs:* Combined total savings of $738,086 ((1 hour for an administrator at $107 per hour plus 1 hour for a nurse manager at $107 per hour) × 6,898 dialysis facilities × 50 percent).

TABLE 16—COST SAVINGS FOR EMERGENCY PREPAREDNESS TESTING

Provider/supplier	Cost savings per provider/supplier	Combined total savings
ASCs	$360	$2,000,520 for 5,557 ASCs.
Hospices (outpatient)	356	$1,438,240 for 4,040 outpatient hospice facilities.
PACEs	71	$16,543 for 233 PACEs.
HHAs	214	$2,695,224 for 12,624 HHAs.
CMHCs	374	$60,214 for 161 CMHCs.
OPOs	89	$5,162 for 58 OPOs.
RHCs/FQHCs	356	$4,284,104 for RHCs and FQHCs ($1,480,960 for 4,160 RHCs and $2,803,144 for 7,874 FQHCs).
ESRD Facilities	107	$738,086 for 6,898 dialysis facilities.

m. One-Time Implementation Costs

All of the changes presented above will necessarily have to be read, and understood, and implemented by affected providers. This will create one-time costs even though the underlying change reduces burden. In most cases these costs will be very low, and may be as simple as observing that a particular procedure will need only to be performed once rather than twice a year, and changing the schedule accordingly. In some cases, the facility will need to adjust in response to multiple burden reduction changes. In still other cases, time will have to be spent deciding how to change existing policy. For example, as discussed previously, ASCs and hospital outpatient facilities will need to decide whether and in what circumstances medical histories and physical examinations will be required or encouraged as a matter of policy. Rather than attempt to estimate these situational variables in detail for each facility type, we believe it possible to make reasonable overall estimates of these one-time costs, recognizing that there will be considerable variations among provider types and among individual providers.

In total, there are about 122 thousand affected entities, as shown in the Table 17 that follows. We assume that on average there will be 1 hour of time spent by a lawyer, 2 hours of time by an administrator or health services manager, and 2 hours of time by other staff (we assume registered nurses or equivalent in wage costs) of each affected provider to understand the regulatory change(s) and make the appropriate changes in procedures. We further estimate that for one tenth of these providers, 2 hours of physician time will be needed to consider changes in facility policy. Average hourly costs for these professions, with wage rates doubled to account for fringe benefits and overhead costs, are $136 for lawyers, $107 for managers, $71 for

registered nurses, and $203 for physicians based on 2017 BLS data.

The estimated costs for an average provider would therefore be 1 hour at $136 and in total for the lawyers, 2 hours at $107 or $214 in total for the managers, 2 hours at $71 or $142 in total for the other staff, and 0.2 hours at $203 or $41 in total for the physicians. These one-time costs add up to $533 per provider on average, and in total to about $65 million.

TABLE 17—ONE-TIME IMPLEMENTATION COSTS

Provider type	Number of affected providers
Religious Nonmedical Health Care Institutions	18
Ambulatory Surgical Centers and hospital outpatient	10,587
Hospices	4,602
Hospitals	4,823
Transplant programs	750
Home Health Agencies	12,624
Critical Access Hospitals	1,353
Comprehensive Outpatient Rehabilitation Facilities	188
Community Mental Health Centers	52
Portable X-Ray Services	500
Rural Health Clinics and Federally Qualified Health Centers	12,034
Emergency Preparedness of Providers and Suppliers	74,246
Total Number of Providers	121,982
Average Cost Per Provider	$533
Total One-Time Cost	$65,016,406

n. Effects on Small Entities, Effects on Small Rural Hospitals, Unfunded Mandates, and Federalism

The RFA requires agencies to analyze options for regulatory relief of small entities, if a rule has a significant impact on a substantial number of small entities. For purposes of the RFA, we estimate that almost all health care providers regulated by CMS are small entities as that term is used in the RFA (including small businesses, nonprofit organizations, and small governmental jurisdictions). The great majority of hospitals and most other health care providers and suppliers are small entities, either by being nonprofit organizations or by meeting the SBA definition of a small business (having revenues of less than $8 million to $41.5 million in any 1 year, varying by type of provider and highest for hospitals). Accordingly, almost all of the savings that the rule will create benefits small entities. We note that individual persons are not small entities for purposes of the RFA, and hence the life-extending transplantation benefits of the rule are not relevant to the RFA.

The RFA requires that a final regulatory flexibility analysis (FRFA) be prepared if a final rule would have a ''significant impact on a substantial number'' of such entities. HHS interprets the statute as mandating this analysis only the impact is adverse, though there are differing interpretations. Regardless, there is no question that the final rule would affect a ''substantial number'' of small entities. As shown in Table 17, the total number of affected entities will be about 122,000, including those affected by more than one provision. The rule of thumb used by HHS for determining whether an impact is ''significant'' is an effect of 3 percent or more of annual revenues. These savings do not approach that threshold. Hospitals account for about one-third of all health care spending and even if all these savings accrued to hospitals this threshold would not be approached. Therefore, the Secretary has determined that these provisions of the final rule will not have a significant economic impact on a substantial number of small entities.

In addition, section 1102(b) of the Social Security Act requires us to prepare a regulatory impact analysis if a rule may have a significant impact on the operations of a substantial number of small rural hospitals. This analysis must conform to the provisions of section 604 of the RFA. For purposes of section 1102(b) of the Act, we define a small rural hospital as a hospital that is located outside of a metropolitan statistical area and has fewer than 100 beds. For the reasons previously given, the Secretary has determined that these provisions of the final rule will not have a significant impact on the operations of a substantial number of small rural hospitals.

Section 202 of the Unfunded Mandates Reform Act of 1995 (UMRA) also requires that agencies assess anticipated costs and benefits before issuing any rule whose mandates require spending in any 1 year of $100 million in 1995 dollars, updated annually for inflation. In 2019, that threshold is approximately $154 million. These provisions of the final rule contain no mandates that will impose spending costs on State, local, or tribal governments, or on the private sector. Indeed, it substantially reduces existing private sector mandates.

Executive Order 13132 establishes certain requirements that an agency must meet when it promulgates a proposed rule (and subsequent final rule) that imposes substantial direct requirement costs on State and local governments, preempts State law, or otherwise has federalism implications. The final rule imposes no such requirements. Importantly, it would remove Federal requirements setting qualification standards for hospice aides. Setting qualifications for health care workers is traditionally a State function, and this change would therefore remove an infringement on State prerogatives.

o. Effects on Costs to Facilities, Providers, Medicare, Other Insurance, and Patients

Most of the individual proposals addressed in the preceding analysis involve reducing burdensome costs on facilities, health care professionals, and patients. Most of those reductions save time and effort currently performed on tasks that we proposed to eliminate or reform and those reductions will result ultimately in reduced medical care costs in these facilities, some of which will result in further effects on public and private insurance costs. In this regard, it is important to emphasize that the CoPs and CfCs generally apply to all patients served by a Medicare and/or Medicaid participating provider or supplier, not just Medicare or Medicaid patients, and to the entire operations of the provider. Revisions to those requirements apply broadly to the entire health care system. We are hopeful that cost reductions ultimately flow to reductions in charges, to reductions in third party payments, and hence to reductions in insurance costs and to those who pay those costs.

Initial savings will accrue primarily to providers. How much of these savings will flow to insurers and patients depends primarily on the payment and reimbursement mechanisms in place for each affected entity for those particular costs. According to the National Health Expenditure Accounts, approximate payer shares in 2016 were 11 percent for consumer out of pocket, 35 percent for private health insurance, 21 percent for Medicare, 18 percent for Medicaid, and 15 percent for other public and private payers such as the Department of Veteran Affairs and the Department of Defense. We would expect savings to approximate these shares. Ultimately, all costs are paid by workers and taxpayers who pay for all health care directly or indirectly, quite apart from immediate cost subsidies or cost sharing.

Two provisions directly reduce Medicare and other insurance costs. Eliminating unnecessary patient history and physical examinations and medical tests for procedures (such as cataract surgery) performed in ASCs and in hospital outpatient surgery will disproportionately reduce Medicare costs, since use of these services rises with age. Additional transplantation of

kidneys will reduce Medicare's ESRD costs, partially offset by increased transplantation costs. Because of the difficulty in finding evidence of the volume of such savings, we cannot estimate the likely effects on Medicare spending.

Most of the facility and provider savings will accrue to Medicare and other insurers over time as payment rate increases are slightly reduced, and the remainder will accrue to other payers and to patients.

p. Benefits to Patients

We discussed life-extending and life-saving benefits at length in the analysis of increases in transplantation. These result from removal of disincentives to transplant patients, or to use organs, where this could reduce success rates by a few percent and possibly trigger closure of transplant centers or programs under current rules. As previously explained, we do not have robust estimates. There are additional and substantial patient benefits likely to result from the cost-reducing reforms that we proposed. Time not wasted by medical care providers or facilities on unnecessary tasks is time that can be used to focus on better care. While such effects could be measured in principal, there is little existing data on magnitudes of such effects. We requested but did not receive public comments on these or any other aspects of costs and benefits of the proposed rule.

4. Alternatives Considered

From within the entire body of CoPs and CfCs, we selected what we believe to be the most viable candidates for reform as identified by stakeholders, by recent research, or by experts as unusually burdensome. This subset of the universe of standards is the focus of the proposed rule. For all of the proposed provisions, we considered not making these changes. Ultimately, we saw no good reasons not to finalize these burden reducing changes.

We welcomed comments on whether we properly selected the best candidates for change, and welcomed suggestions for additional reform candidates from the entire body of CoPs and other regulatory provisions that fall directly on providers. As discussed earlier in this preamble, we did receive suggestions for additional reforms and will consider those in future reform efforts.

5. Uncertainty

Our estimates of the effects of this regulation are subject to significant uncertainty. While the Department is confident that these reforms will provide flexibilities to facilities that will yield major cost savings, there are uncertainties about the magnitude of these effects. Despite these uncertainties, we are confident that the rule will yield substantial overall cost reductions and other benefits. In this analysis we have provided estimates to suggest the potential savings these reforms could achieve under certain assumptions. We appreciate that those assumptions are simplified, and that actual results could be substantially higher or lower. Although there is uncertainty concerning the magnitude of all of our estimates, we do not have the data to provide specific estimates for each reform proposed, as to the range of possibilities, or to estimate all categories of possible benefits, including health effects.

6. Conclusion

These provisions of the final rule will substantially reduce existing regulatory requirements imposed on health care providers through the CoPs and related regulatory provisions that Medicare and Medicaid providers must meet. For some provisions, health benefits to patients will be substantial and direct. Other provisions will free up time and efforts of health care providers to focus on improving health care quality and service delivery. Although this rule does not require a final regulatory flexibility analysis, we believe the preceding analysis meets the requirements for such an analysis as set out in § 604 of the Regulatory Flexibility Act. In addition, the analysis above, together with the remainder of this preamble, provides a regulatory impact analysis.

In accordance with the provisions of Executive Order 12866, this regulation was reviewed by the Office of Management and Budget.

B. Regulatory Impact Statement for Fire Safety Requirements for Certain Dialysis Facilities

We have examined the impact of these regulatory provisions as required by Executive Order 12866 on Regulatory Planning and Review (September 30, 1993), Executive Order 13563 on Improving Regulation and Regulatory Review (January 18, 2011), the Regulatory Flexibility Act (RFA) (September 19, 1980, Pub. L. 96–354), section 1102(b) of the Social Security Act, section 202 of the Unfunded Mandates Reform Act of 1995 (March 22, 1995; Pub. L. 104–4), Executive Order 13132 on Federalism (August 4, 1999), the Congressional Review Act (5 U.S.C. 804(2)), and Executive Order 13771 on Reducing Regulation and Controlling Regulatory Costs (January 30, 2017).

Executive Orders 12866 and 13563 direct agencies to assess all costs and benefits of available regulatory alternatives and, if regulation is necessary, to select regulatory approaches that maximize net benefits (including potential economic, environmental, public health and safety effects, distributive impacts, and equity). A regulatory impact analysis (RIA) must be prepared for major rules with economically significant effects ($100 million or more in any 1 year).

We do not know how many, if any, dialysis facilities would be affected by this adoption of the 2012 editions of the NFPA 101 and NFPA 99. All States have adopted the 2012 editions, so as a practical matter, all dialysis facilities are already following the 2012 requirements. Therefore, we do not anticipate any impact on the applicable dialysis facilities.

Accordingly, these provisions do not reach the economic threshold and thus are neither economically significant under Executive Order 12866, nor a major rule under the Congressional Review Act.

The RFA requires agencies to analyze options for regulatory relief of small entities, and to prepare a final regulatory flexibility analysis if a rule is found to have a significant impact on a substantial number of small entities. For purposes of the RFA, small entities include small businesses, nonprofit organizations, and small governmental jurisdictions. Most hospitals and most other providers and suppliers are small entities, either by nonprofit status or by having revenues of less than $7.5 million to $38.5 million in any 1 year. Individuals and States are not included in the definition of a small entity. We are not preparing a final regulatory flexibility analysis because we have determined, and the Secretary certifies, that these provisions of the final rule will not have a significant economic impact on a substantial number of small entities.

In addition, section 1102(b) of the Social Security Act (the Act) requires us to prepare a regulatory impact analysis if a rule may have a significant impact on the operations of a substantial number of small rural hospitals. This analysis must conform to the provisions of section 604 of the RFA. For purposes of section 1102(b) of the Act, we define a small rural hospital as a hospital that is located outside of a Metropolitan Statistical Area for Medicare payment regulations and has fewer than 100 beds. We are not preparing an analysis for section 1102(b) of the Act because

we have determined, and the Secretary certifies, that these provisions of the final rule will not have a significant impact on the operations of a substantial number of small rural hospitals.

Section 202 of the Unfunded Mandates Reform Act of 1995 also requires that agencies assess anticipated costs and benefits before issuing any rule whose mandates require spending in any 1 year of $100 million in 1995 dollars, updated annually for inflation. In 2019, that threshold is approximately $154 million. These provisions will have no consequential effect on State, local, or tribal governments or on the private sector.

Executive Order 13132 establishes certain requirements that an agency must meet when it promulgates a proposed rule (and subsequent final rule) that imposes substantial direct requirement costs on State and local governments, preempts State law, or otherwise has Federalism implications. Since these provisions do not impose any costs on State or local governments, the requirements of Executive Order 13132 are not applicable.

In accordance with the provisions of Executive Order 12866, this regulation was reviewed by the Office of Management and Budget.

F. Regulatory Impact Analysis for Hospital and Critical Access Hospital Changes To Promote Innovation, Flexibility, and Improvement in Patient Care

1. Statement of Need

CMS is aware, through conversations with stakeholders and federal partners, and as a result of internal evaluation and research, of outstanding concerns about CoPs for hospitals and CAHs, despite recent revisions. We believe that the revisions will alleviate many of those concerns. In addition, modernization of the requirements would cumulatively result in improved quality of care and improved outcomes for all hospital and CAH patients. We believe that benefits would include reduced readmissions, reduced incidence of hospital-acquired conditions (including healthcare-associated infections), improved use of antibiotics at reduced costs (including the potential for reduced antibiotic resistance), and improved patient and workforce protections.

These benefits are consistent with former HHS Quality Initiatives, including efforts to prevent HAIs; the national action plan for adverse drug event (ADE) prevention; the national strategy for Combating Antibiotic-Resistant Bacteria (CARB); and the Department's National Quality Strategy (*http://www.ahrq.gov/workingforquality/index.html*). Principles of the National Quality Strategy supported by the proposed rule include eliminating disparities in care; improving quality; promoting consistent national standards while maintaining support for local, community, and State-level activities that are responsive to local circumstances; care coordination; and providing patients, providers, and payers with the clear information they need to make choices that are right for them (*http://www.ahrq.gov/workingforquality/nqs/principles.htm*). Our proposal to prohibit discrimination would support eliminating disparities in care, and we believe our proposals about QAPI and infection prevention and control and antibiotic stewardship programs will improve quality and promote consistent national standards. Our proposals regarding the term licensed independent practitioners and establishing policies and protocols for when the presence of an RN is needed will support care coordination and quality of care. In sum, we believe our proposed changes are necessary, timely, and beneficial. We are finalizing most of the aforementioned proposals.

2. Overall Impact

We have examined the impacts of this rule as required by Executive Order 12866 on Regulatory Planning and Review (September 30, 1993), Executive Order 13563 on Improving Regulation and Regulatory Review (January 18, 2011), the Regulatory Flexibility Act (RFA) (September 19, 1980, Pub. L. 96–354), section 1102(b) of the Social Security Act, section 202 of the Unfunded Mandates Reform Act of 1995 (March 22, 1995; Pub. L. 104–4), Executive Order 13132 on Federalism (August 4, 1999), the Congressional Review Act (5 U.S.C. 804(2)), and Executive Order 13771 on Reducing Regulation and Controlling Regulatory Costs (January 30, 2017).

Executive Orders 12866 and 13563 direct agencies to assess all costs and benefits of available regulatory alternatives and, if regulation is necessary, to select regulatory approaches that maximize net benefits (including potential economic, environmental, public health and safety effects, distributive impacts, and equity). Section 3(f) of Executive Order 12866 defines a ''significant regulatory action'' as an action that is likely to result in a rule: (1) Having an annual effect on the economy of $100 million or more in any 1 year, or adversely and materially affecting a sector of the economy, productivity, competition, jobs, the environment, public health or safety, or state, local or tribal governments or communities (also referred to as ''economically significant''); (2) creating a serious inconsistency or otherwise interfering with an action taken or planned by another agency; (3) materially altering the budgetary impacts of entitlement grants, user fees, or loan programs or the rights and obligations of recipients thereof; or (4) raising novel legal or policy issues arising out of legal mandates, the President's priorities, or the principles set forth in the Executive Order.

A regulatory impact analysis (RIA) must be prepared for major rules with economically significant effects ($100 million or more in any 1 year). We estimate that this rulemaking is ''economically significant'' as measured by the $100 million threshold, and hence also a major rule under the Congressional Review Act. Accordingly, we have prepared a regulatory impact analysis (RIA) that, to the best of our ability, presents the costs and benefits of the rulemaking.

The Congressional Review Act, 5 U.S.C. 801 et. seq., as added by the Small Business Regulatory Enforcement Fairness Act of 1996, generally provides that before a rule may take effect, the agency promulgating the rule must submit a rule report, which includes a copy of the rule, to each chamber of the Congress and to the Comptroller General of the United States. HHS will submit a report containing this rule and other required information to the U.S. Senate, the U.S. House of Representatives, and the Comptroller General of the United States prior to publication of the rule in the **Federal Register**.

The final rule would create ongoing cost savings to hospitals and CAHs in many areas. We believe these savings would largely, but not necessarily entirely, offset any costs to hospitals and CAHs that would be incurred by other changes we are finalizing in this rule. The financial savings and costs are summarized in Table 18.

We sought public comment on our burden assumptions and estimates as well as comments identifying additional reforms that should be considered for future rulemakings. As is usually the case in impact analysis, substantial uncertainty surrounds these estimates and we solicited comments on any suggestions or data that would inform our estimates for the final rule.

Comment: We received a comment that was generally in support of the changes proposed and the goals of those changes; however, the commenter was concerned that the rule dramatically

underestimates the time and effort required for compliance with the antibiotic stewardship and Quality Assessment and Performance Improvement (QAPI) programs.

Response: We note that since the QAPI requirement will replace the annual evaluation requirement, we believe many of those resources could be reallocated to QAPI activities to minimize burden. In addition, we have re-evaluated our proposed requirements and eliminated unnecessary prescriptiveness, allowing each CAH the flexibility to implement its QAPI program in the most efficient manner for its unique circumstances. With regards to the antibiotic stewardship program, we have expanded on our cost estimates to account for a more robust intervention, and presented a range of estimates to account for uncertainty.

Comment: We received a comment expressing concern over whether the costs of implementing the infection prevention and control program were underestimated due to the additional training and technical assistance that would be required for the individual fulfilling the infection preventionist role in CAHs.

Response: We thank you for your comment, and we agree that the burden for CAHs due to the infection preventionist role was underrepresented in the proposed rule. We have revised our estimates to account for that error in this final rule.

TABLE 18—SECTION-BY-SECTION ECONOMIC IMPACT ESTIMATES

Issue	Frequency	Number of affected entities	Estimated net costs ($ millions) *
Hospitals		4,823	
• Patients' rights (RIA)	One-time	4,823	Not estimated
• Nursing services (ICR)	Every 3 years	1,193	1
• Nursing services (ICR)	One-time	1,193	2
• Infection Prevention & Control	One-time	4,823	20
and Antibiotic Stewardship (RIA)	Recurring annually	482	−23
CAHs		1,353	
• QAPI (ICR)	Recurring annually	1,004	1
• Food and dietary (RIA)	Recurring annually	677	−5
• Infection Prevention & Control	One-time	1,353	6
	Recurring annually	1,004	148
and Antibiotic Stewardship (RIA)	Recurring annually	501	−27

Note: This table includes entries only for those proposed reforms that we believe would have a measurable economic effect; includes estimates from ICRs and RIA. Negative costs indicate cost savings.
* Amounts rounded to the nearest million.

3. Anticipated Effects

There are about 4,823 hospitals and 1,353 CAHs that are certified by Medicare and/or Medicaid. We use these figures to estimate the potential impacts of the final rule. In the estimates that were shown in the Collection of Information Requirements section of the preamble and in the RIA here, we estimate hourly costs as follows. Using May 2017 data from the Bureau of Labor Statistics, we have obtained estimates of the national average hourly wage for all medical professions (*https://www.bls.gov/oes/2017/may/oes_nat.htm*). We have adjusted these rates by adding 100 percent to the hourly wage to account for overhead costs and fringe benefit costs. We use the following average hourly wages in our estimates:

TABLE 19—HOURLY COSTS BY PROFESSION

Registered dietitians and nutrition professionals	$58
Registered nurses	71
Advanced practice registered nurses	103
Physician assistants	101
Pharmacists	117
Network data analysts	89
Hospital CEO/administrators	189
CAH CEO/administrators	107

TABLE 19—HOURLY COSTS BY PROFESSION—Continued

Clerical staff workers	33
Physicians	191
Clinical Laboratory Technicians	51

a. Effects on Hospitals

(1) Licensed Independent Practitioners (Patients' Rights § 482.13)

We are finalizing our proposal to delete the modifying term ''independent'' from the CoP at § 482.13(e)(5), as well as at § 482.13(e)(8)(ii). While we believe that hospitals might be able to achieve some costs savings through these changes (by having additional licensed practitioners such as PAs allowed to write restraint and seclusion orders and thus relieve some of the burden from physicians), we do not have a reliable means of quantifying these possible cost savings. We solicited comments as to whether the assumption of cost savings is reasonable and welcomed any data that may help inform the costs and benefits of this provision, but did not receive any comments specific to our solicitation.

(2) Infection Control and Antibiotic Stewardship (Infection Prevention and Control § 482.42)

We are revising the hospital requirements at 42 CFR 482.42, ''Infection control,'' which currently require hospitals to provide a sanitary environment to avoid sources and transmission of infections and communicable diseases. Hospitals are also currently required to have a designated infection control officer, or officers, who are required to develop a system to identify, report, investigate and control infections and communicable diseases of patients and personnel. The hospital's CEO, medical staff, and director of nursing services are charged with ensuring that the problems identified by the infection control officer or officers are addressed in hospital training programs and their QAPI program. The CEO, medical staff, and director of nursing services are also responsible for the implementation of successful corrective action plans in affected problem areas.

We are finalizing our proposal to change to the title of this CoP to ''Infection prevention and control and antibiotic stewardship programs.'' By adding the word ''prevention'' to the CoP name, our intent is to promote

larger, cultural changes in hospitals such that prevention initiatives are recognized on balance with their current, traditional control efforts. And by adding ''antibiotic stewardship'' to the title, we would emphasize the important role that a hospital could play in improving patient care and safety and combatting antimicrobial resistance through implementation of a robust stewardship program that follows nationally recognized guidelines for appropriate antibiotic use. Along with these changes, we proposed to change the introductory paragraph to require that a hospital's infection prevention and control and antibiotic stewardship programs be active and hospital-wide for the surveillance, prevention, and control of HAIs and other infectious diseases, and for the optimization of antibiotic use through stewardship. We will also require that a program demonstrate adherence to nationally recognized infection prevention and control guidelines for reducing the transmission of infections, as well as best practices for improving antibiotic use, for reducing the development and transmission of HAIs and antibiotic-resistant organisms. While these particular changes are new to the regulatory text, it is worth noting that these requirements, with the exception of the new requirement for an antibiotic stewardship program, have been present in the Interpretive Guidelines (IGs) for hospitals since 2008 (See A0747 at *Appendix A—Survey Protocol, Regulations and Interpretive Guidelines for Hospitals, http://cms.gov/manuals/Downloads/som107ap_a_hospitals.pdf*).

(a) Infection Prevention and Control

Each hospital will be required to review their current infection control program and compare it to the new requirements contained in this section. After performing this comparison, each hospital will be required to revise their program so that it complies with the requirements in this section. Based on our experience with hospitals, we believe that a physician and a nurse on the infection control team will conduct this review and revision of the program. We believe both the physician and the nurse will spend 16 hours each for a total of 32 hours. According to BLS data, doubled to account for overhead costs and fringe benefits, physician time costs an average of $191 an hour, and nurses' time costs an average wage of $71 an hour. Thus, to ensure their infection control program complied with the requirements in this section, we estimate that each hospital will require 32 burden hours (16 hours for a physician and 16 hours for a nurse) at a cost of $4,192 ($3,056 ($191 an hour for a physician × 16 burden hours) + $1,136 ($71 an hour for a nurse × 16 burden hours)). Based on the estimate, for all 4,823 hospitals, complying with this requirement will require 154,336 burden hours (32 hours for each hospital × 4,823 hospitals) at a one-time cost of approximately $20 million ($4,192 for each hospital × 4,823 hospitals).

At § 482.42(a)(1), we are finalizing our proposal to require the hospital to appoint an infection preventionist(s)/infection control professional(s). Within this change we are deleting the outdated term, ''infection control officer,'' and replacing it with the more current and accurate terms, ''infection preventionist/infection control professional.'' CDC has defined ''infection control professional (ICP)'' as ''a person whose primary training is in either nursing, medical technology, microbiology, or epidemiology and who has acquired specialized training in infection control.'' In designating infection preventionists/ICPs, hospitals should ensure that the individuals so designated are qualified through education, training, experience, or certification (such as that offered by the CBIC, or by the specialty boards in adult or pediatric infectious diseases offered for physicians by the American Board of Internal Medicine (for internists) and the American Board of Pediatrics (for pediatricians).

Since this requirement has been present in the IGs since 2008, we believe that hospitals have been aware of CMS' expectations for the qualifications of infection control officers. The Joint Commission has a similar requirement (TJC Accreditation Standard IC.01.01.01). We believe that hospitals accredited by TJC (over 75 percent of all hospitals (*http://www.jointcommission.org/facts_about_hospital_accreditation/*)) should already be in compliance, or near compliance, with this requirement. The Joint Commission requires that a hospital identify the individual(s) responsible for its infection prevention and control program, including the individual(s) with clinical authority over the infection prevention and control program. For these reasons, we do not anticipate any new recurring burden to hospitals attributable to appointing an infection preventionist.

(b) Antibiotic Stewardship (AS)

At § 482.42(b), we believe that the finalized requirements for a hospital to have an active antibiotic stewardship program, and for its organization and policies, would constitute additional regulatory burden, as will be discussed in more detail below. However, we believe that the estimated costs of an AS program would be greatly offset by the savings that a hospital would achieve through such a program. The most obvious savings would be from decreased inappropriate antibiotic use leading to overall decreased drug costs for a hospital. Antimicrobial costs, particularly antibiotic costs, often constitute a significant percentage of the pharmacy budget for a hospital, so reducing overall antibiotic use would most likely have a substantial impact in lowering overall drug costs for a hospital. In fact, our review of the literature showed significant savings in this area, with annual savings proportional to bed size of the hospital or hospital unit. Reported annual savings ranged from $27,917 (Canadian dollars) for a 12-bed medical/surgical intensive care unit to $2.1 million for an 880-bed academic medical center.[6] [7]

We specifically note the $177,000 in annual drug cost savings achieved by a 120-bed community hospital with its AS program for the year of 2000 compared to 1999, and would use that as the average cost savings for the average-sized 124-bed hospital discussed above (LaRocco 2003, CID ''Concurrent antibiotic review programs—a role for infectious diseases specialists at small community hospitals''). Inflating this number to 2017 dollars using the consumer price index yields approximately $258,000. According to NHSN survey data, almost 82 percent of hospitals were implementing all 7 of CDC's core elements of hospital antibiotic stewardship programs in 2017. This is significantly higher than the estimate published in the proposed rule, because the number of hospitals implementing AS programs has increased dramatically in the past several years. This is primarily driven by large accrediting organizations announcing and implementing their own antimicrobial stewardship standards. Preliminary 2018 data suggest that this upward trend of AS programs is likely to continue to some degree; however, since the the antimicrobial stewardship standards are already in effect for one of the largest

[6] Leung V., Gill S., Sauve J., Walker K., Stumpo C., Powis J. Growing a ''positive culture'' of antimicrobial stewardship in a community hospital. The Canadian journal of hospital pharmacy. 2011; 64(5):314–20.

[7] Beardsley J.R., Williamson J.C., Johnson J.W., Luther V.P., Wrenn R.H., Ohl C.C. Show me the money: Long-term financial impact of an antimicrobial stewardship program. Infection control and hospital epidemiology: The official journal of the Society of Hospital Epidemiologists of America. 2012; 33(4):398–400.

accrediting bodies as of January 2017, we would expect a sharp decline in the marginal rate of AS implementation in 2017 and beyond without further intervention. Therefore, for our baseline we have projected that approximately 90% of hospitals would have AS programs in 2018 were the rate of adoption to decrease by half, and we assume that is approximately where the market would level off absent further intervention. We have accounted for this uncertainty by providing estimates in the accounting statement that are 25 percent higher or lower than our primary estimate. Accordingly, we estimate that the annual drug cost savings for 10 percent of all 4,823 hospitals under the rule would be approximately $124 million (482 hospitals × $258,000). While most of the evidence we reviewed showed clear savings through reduced hospital pharmacy costs that was a direct result of reduced antibiotic use, some studies also demonstrated other financial benefits for hospitals with AS programs, such as decreases in patient length of stay and readmission rates as well as reductions in CDI rates and costs (as we discuss in more detail in the paragraphs to follow).

Based on the published studies that we previously noted, we therefore also believe that the proposed requirement for an AS program would assist hospitals in significantly reducing rates of CDI and the attendant costs. Based on an AS program model developed by the CDC, a hospital combined IC/AS program with an average effectiveness rate of 50 percent would reduce the number of CDIs among Medicare beneficiaries annually by 101,000.[8] The costs examined in the model were costs for patients who developed CDIs while they were in the hospital or had to be re-admitted to the hospital for a case of CDI that was a result of a recent hospitalization, so the costs are much higher than what would be associated with outpatient cases. The 101,000-reduction is an annual reduction in the number of cases of CDI among patients who develop the infection because of medical care; that is, they were admitted for something else and then acquired CDI while getting care. It should be noted that the 101,000 number actually comprises two types of CDI—cases that occur while the patient is in the hospital and cases that are directly attributable to a recent hospitalization, but which manifest after the patient is discharged and requires a readmission. Their study found that the cost for patients who develop the infection while they are already in the hospital is between $4,323 and $8,146. However, the infections related to a recent hospital stay that require readmission are more expensive, on average, because they require an entirely new admission; the cost of those cases is between $7,061 and $11,601. A more recent CDC study found the attributable patient cost savings for health care-associated clostridioides difficile (HCA–CDI) to be $6,844 per prevented case, and $12,703 per prevented case of recurrent CDI (2015 $).[9] Inflating these numbers to 2017 dollars using the consumer price index returns approximately $7,133 and $13,240 respectively. Scott et al. built their economic model with a range from 10 to 50 percent effectiveness, which represents a range of between approximately 200,000 and 1.1 million inpatient cases of HCA–CDI averted in a 5 year period.

For our purposes, we have based our central estimate on the middle of the aforementioned range, or approximately 30 percent effectiveness, resulting in 546,000 inpatient cases of HCA–CDI averted, and 117,000 recurrent cases averted. It is not clear exactly how many of these averted cases would occur in hospitals versus CAHs, but the prevalence of existing AS programs (or lack thereof) suggest CAHs may have more potential for improvement despite their smaller number of beds; there is also a limited amount of research that suggests the rate of CDI may be higher in hospitals with fewer beds, possibly due to rates of testing or other factors; and it is also possible that CAHs serve an older population that is more at risk for healthcare-associated infections than patients at non-CAHs.[10] [11] Therefore, we assume an equal number of cases averted per facility, meaning approximately 78 percent of these would occur in hospitals and 22 percent in CAHs. As previously explained, we estimate that 90 percent of hospitals already have AS programs, and therefore 10 percent of those averted cases would be attributable to this regulation. This comes to a total of 42,588 HCA–CDI cases averted, and 9,126 recurrent cases averted for hospitals in a 5 year period. Multiplying these averted cases by the attributable patient cost savings, and annualizing the amount, comes to approximately $85 million in annualized patient cost savings. These patient cost savings do not include the cost savings attributable to any averted or modified antibiotic regimen, which was calculated above.

Thus, we estimate that the combined annual drug cost savings and patient cost savings will be approximately $209 million. These savings will accrue to patients (reduced out-of-pocket costs), hospitals (reduced costs and improved balance sheets), as well as healthcare insurers, including Medicare (over time, payment rates will be adjusted downward as hospital costs fall). However, we are not able to apportion the savings that would accrue to each group with any accuracy and it will inevitably change over time as insurance rates change. Regardless, healthcare-associated infections are known to be expensive to insurers, including CMS. Preventing these infections will reduce CMS and other insurer expenditures, both on direct hospital costs and through reduced re-admissions. The cost-savings estimates for CDI included in the RIA provide an example of the savings Medicare and other insurers could realize through reductions in just one HAI. Ultimately, of course, insurance costs (and the medical care they pay for) are paid by taxpayers and workers. Even the employer contribution to insurance costs is generally regarded by economists as part of worker compensation. We requested comment regarding data that would allow for more robust quantification of the rule's impacts on HAIs other than CDI, but did not receive any such comments.

We believe that the burden of implementing and maintaining an AS program includes the costs of the qualified personnel needed to establish and manage such a hospital program. In the proposed rule, our review of the literature, consultations with CDC, and experience with hospitals suggested that the establishment and maintenance of a hospital antibiotic stewardship program for an average-size hospital (approximately 124 beds), would require at least the leadership of a physician (preferably one with training in infectious diseases) and a clinical pharmacist, and also the services of a

[8] Rachel B. Slayton, Ph.D., MPH; R. Douglas Scott II, Ph.D.; James Baggs, Ph.D.; Fernanda C. Lessa, MD; L. Clifford McDonald, MD; John A. Jernigan, MD. ''The Cost–Benefit of Federal Investment in Preventing Clostridium difficile Infections through the Use of a Multifaceted Infection Control and Antimicrobial Stewardship Program,'' Infection Control & Hospital Epidemiology 2015;00(0):1–7.

[9] R. Douglas Scott II, Rachel B. Slayton, Fernanda C. Lessa, James Baggs, Steven D. Culler, L. Clifford McDonald and John A. Jernigan; ''Assessing the social cost and benefits of a national requirement establishing antibiotic stewardship programs to prevent Clostridioides difficile infection in US hospitals''; *Antimicrobial Resistance & Infection Control,* 2019, 8:17.

[10] Kamboj M, Brite J, Aslam A, et al. Artificial Differences in Clostridium difficile Infection Rates Associated with Disparity in Testing. Emerging Infectious Diseases. 2018;24(3):584–587.

[11] Joynt, K. E., Harris, Y., Orav, E. J., & Jha, A. K. (2011). Quality of care and patient outcomes in critical access rural hospitals. JAMA, 306(1), 45–52. doi:10.1001/jama.2011.902.

network data analyst, at the following proportions of full-time employee salaries respectively: 0.10, 0.25, and 0.05. However, the latest research on the resources required for an effective AS program suggest that the minimum full-time equivalent support recommended for a hospital of this size may be somewhat more burdensome, due to the leadership of a pharmacist and physician at the full time equivalents of their salaries of 1.0 and 0.4 respectively.[12] We also based our estimates on the prior assumption that 10 percent of hospitals do not yet have programs that implement all of the CDC core elements. Based on these assumptions, the minimum annual cost of the essential team members for a hospital to establish and maintain an antibiotic stewardship program would be $386,800 (($191 × 0.40 × 2,000 hours per year = $152,800 for a physician) + ($117 × 1.00 × 2,000 hours per year = $234,000 for a clinical pharmacist)). The annual labor cost for 10 percent of hospitals ($386,800 × 482) would be approximately $186 million.

We invited public comment regarding the amount by which costs may exceed savings in cases of non-voluntary IC/AS program adoption, but did not receive comments with specific estimates.

b. Effects on CAHs

(1) Ordering Privileges for Qualified Dietitians (RDs) and Qualified Nutrition Professionals (Provision of Services § 485.635)

We are finalizing our proposal to revise the CAH requirements at 42 CFR 485.635 (a)(3)(vii), which currently require that the nutritional needs of inpatients are met in accordance with recognized dietary practices and the orders of the practitioner responsible for the care of the patients. Specifically, we proposed revisions that would change the CMS requirements to allow for flexibility in this area by requiring that all patient diets, including therapeutic diets, must be ordered by a practitioner responsible for the care of the patient, or by a qualified dietitian or qualified nutrition professional as authorized by the medical staff in accordance with State law governing dietitians and nutrition professionals.

With these changes to the current requirements, a CAH will have the regulatory flexibility to grant qualified dietitians/nutrition professionals specific dietary ordering privileges (including the capacity to order specific laboratory tests to monitor nutritional interventions and then modify those interventions as needed). We believe that this is another area of change to the requirements that might produce savings since this will allow physicians to delegate to a qualified dietitian or qualified nutrition professional the task of prescribing patient diets, including therapeutic diets, to the extent allowed by state law. We further believe that dietitians or other clinically qualified nutrition professionals are already performing patient dietary assessments and making dietary recommendations to the physician (or PA or APRN) who then evaluates the recommendations and writes orders to implement them. Our analysis does not take into account improved quality of life nor improved clinical outcomes for the patient. We do not currently have data to more precisely estimate the savings that this revision could produce in CAHs. However, we believe that it might allow for better use of both physician/PA/APRN and dietitian/nutrition professional time and could result in improved quality of life and improved clinical outcomes for CAH patients.

More obviously, dietitians/nutrition professionals with ordering privileges will be able to provide dietary/nutritional services at lower costs than physicians (as well as APRNs and PAs, two categories of non-physician practitioners that have traditionally also devised and written patient dietary plans and orders). This cost savings stems in some part from significant differences in the average salaries between the professions and the time savings achieved by allowing dietitians/nutrition professionals to autonomously plan, order, monitor, and modify services as needed and in a more complete and timely manner than they are currently allowed. Savings would be realized by CAHs through the physician/APRN/PA time and salaries saved.

Physicians, APRNs, and PAs often lack the training and educational background to manage the nutritional needs of patients with the same efficiency and skill as dietitians/nutrition professionals. The addition of ordering privileges enhances the ability that dietitians/nutrition professionals already have to provide timely, cost-effective, and evidence-based nutrition services as the recognized nutrition experts on a CAH interdisciplinary team.

It might seem natural to calculate these cost savings for CAHs based on the following assumptions:

- There is an average hourly cost difference of $74 between dietitians/nutrition professionals on one side ($58 per hour) and the hourly cost average for physicians, APRNs, and PAs ($132 per hour) on the other;
- There were 282,584 inpatient visits by Medicare beneficiaries in 2011 (According to a December 2013 OIG report (*http://oig.hhs.gov/oei/reports/oei-05-12-00081.pdf*)) with each of these stays requiring at least one dietary plan and orders;
- On average, each dietary order, including ordering and monitoring of laboratory tests, subsequent modifications to orders, and dietary orders for discharge/transfer/outpatient follow-up as needed, will take 30 minutes (0.5 hours) of a physician's/APRN's/PA's/dietitian's/nutrition professional's time per patient during an average stay; and
- We estimate that approximately 50 percent of CAHs (or approximately 677 CAHs) have not already granted ordering privileges to dietitians and nutrition professionals, reducing the number of total number of CAH inpatient stays to 141,292.

The resulting savings would be $7,722 annually on average for each CAH (141,292 inpatient hospital stays × 0.50 hours of a physician's/APRN's/PA's/dietitian's/nutrition professional's time × $74 per hourly cost difference ÷ 677 CAHs) for a total annual savings of approximately $5.2 million. We note that these estimates exclude some categories of cost increases (for example, internal CAH meetings to plan changes and the time and other costs of training physicians, dietitians/nutrition professionals, and other staff on the new dietary ordering procedures). Even more importantly, this estimate does not account for barriers, other than federal regulation, to RDs receiving ordering privileges; Weil et al. (2008) provide evidence on the existence of such barriers, which would likely prevent at least some of these cost savings from being realized.[13] If such barriers are not relevant, then there is another adjustment that would need to be made to the calculation. Specifically, the dietitian wage estimate would need to be revised because the wage data do not account for the increase in demand for dietitians we projected would result from the hospital burden reduction rule

[12] Sarah B Doernberg, Lilian M Abbo, Steven D Burdette, Neil O Fishman, Edward L Goodman, Gary R Kravitz, James E Leggett, Rebekah W Moehring, Jason G Newland, Philip A Robinson, Emily S Spivak, Pranita D Tamma, Henry F Chambers, Essential Resources and Strategies for Antibiotic Stewardship Programs in the Acute Care Setting, Clinical Infectious Diseases, Volume 67, Issue 8, 15 October 2018, Pages 1168–1174

[13] Weil, Sharon D., et al. ''Registered Dietitian Prescriptive Practices in Hospitals.'' *Journal of the American Dietetic Association* 108:1688–1692. October 2008.

finalized that same month. For the savings estimates accompanying that rule to be achieved would require at least 6.7 percent of the dietitian FTEs in the U.S. to be newly allocated to providing nutrition services to hospital patients.[14] This shift in activity entails a substantial movement along the supply curve for dietitian labor, thus raising the dietitian wage and reducing the cost savings estimated with the method outlined. For these reasons, as well as our lack of data on CAH outpatient visits for nutritional services and the impact that the proposed regulatory changes might have on hospital costs in this area, we present the estimate for discussion purposes only.

(2) § 485.640 Condition of Participation: Infection Prevention and Control and Antibiotic Stewardship Programs

As we finalized for hospitals, we are also finalizing the new infection prevention and control and antibiotic stewardship requirements for CAHs. The infection control requirements for CAHs have remained unchanged since 1997. We are adding a new infection prevention and control (as well as antibiotic stewardship) CoP for CAHs because the existing standards for infection control do not reflect the current nationally recognized practices for the prevention and elimination of healthcare-associated infections.

(a) Infection Prevention and Control

Each CAH will be required to review their current infection control program and compare it to the new requirements. After performing this comparison, each CAH will be required to revise their program so that it complies with the new requirements. Based on our experience with CAHs, we believe that a physician and a nurse on the infection control team would conduct this review and revision of the program. We believe both the physician and the nurse will spend 16 hours each for a total of 32 hours. Physicians earn an average of $191 an hour, and nurses earn an average wage of $71 an hour, including overhead and fringe benefits. Thus, to ensure their infection control program complies with the new requirements, we estimate that each CAH would require 32 burden hours (16 hours for a physician and 16 hours for a nurse) at a cost of $4,192 ($3,056 ($191 an hour for a physician × 16 burden hours) + $1,136 ($71 an hour for a nurse × 16 burden hours)). Based on the estimate, for all 1,353 CAHs, complying with this requirement will require 43,296 burden hours (32 hours for each CAH × 1,353 CAHs) at a one-time cost of approximately $5.7 million ($4,192 for each CAH × 1,353 CAHs).

CAHs will also incur a recurring cost due to the new requirement that they appoint an infection preventionist. The Joint Commission has a similar requirement (TJC Accreditation Standard IC.01.01.01), and so we believe that the 349 CAHs accredited by TJC should already be in compliance, or near compliance, with this requirement. The Joint Commission requires that a CAH identify the individual(s) responsible for its infection prevention and control program, including the individual(s) with clinical authority over the infection prevention and control program. For the remaining CAHs not accredited by TJC, we are calculating the burden for them to come into compliance with this requirement.

Based on our experience with CAHs, we believe that most ICPs would be registered nurses with experience, education, and training in infection control. As of 2017, approximately 1,004 CAHs are not accredited by TJC. For the purposes of a burden estimate, we assume that each CAH will choose to employ one ICP full-time (52 weeks × 40 hours = 2,080 hours) at $71 per hour, although the regulation does not require the hiring of a new individual, and this position and its associated burden may overlap with that calculated for antibiotic stewardship below. Nonetheless, the cost per facility is estimated to be $147,680 annually (2,080 hours × $71), and the total cost for all non-TJC-accredited CAHs would be approximately $148 million annually (1,004 × $147,680).

(b) Antibiotic Stewardship

Similarly, we believe that the finalized requirements for a CAH to have an active antibiotic stewardship program, and for its organization and policies, would constitute additional regulatory burden. We believe that the burden of implementing and maintaining an AS program includes the costs of the qualified personnel needed to establish and manage such a CAH program. In the proposed rule, our review of the literature, consultations with CDC, and experience with CAHs suggested that the establishment and maintenance of a CAH antibiotic stewardship program for a statutorily mandated 25-bed CAH, would require at least the leadership of a physician (preferably an infectious disease physician or physician with training in antibiotic stewardship) and a clinical pharmacist (preferably with training in infectious diseases or antibiotic stewardship), and also the services of a network data analyst at the following proportions of full-time employee salaries respectively: 0.05, 0.10, 0.025. However, the latest research on the resources required for an effective AS program suggest that the minimum full-time equivalent support needed for a CAH may be somewhat more burdensome. Doernberg et al. were unable to make specific recommendations for hospitals with fewer than 100 beds, however, the average self-reported burden for hospitals under 100 beds was larger than we anticipated. Therefore, for our purposes we assume 25-bed CAHs will incur half of the average costs that were reported by hospitals with fewer than 100 beds. Thus, we estimate each CAH will require the leadership of a pharmacist and physician at the full time equivalents of their salaries of 0.45 and 0.19 respectively. According to NHSN survey data, approximately 58 percent of CAHs reported having an AS program that meets all of the CDC's core elements in 2017. As previously mentioned, this number is significantly higher than the estimate published in the proposed rule because the number of CAHs implementing AS programs has increased dramatically in the past several years. This is primarily driven by large accrediting organizations announcing and implementing their own antimicrobial stewardship standards. Preliminary 2018 data suggest that this upward trend of AS programs is likely to continue to some degree; however, since the antimicrobial stewardship standards are already in effect for one of the largest accrediting bodies as of January 2017, we would expect a sharp decline in the marginal rate of AS implementation in 2017 and beyond without further intervention. Therefore, for our baseline we have projected that approximately 63% of CAHs would have AS programs in 2018 were the rate of adoption to decrease by half, and we assume that is approximately where the market would level off absent further intervention. We have accounted for this uncertainty by providing estimates in the accounting

[14] BLS data show employment of 59,490 dietitians, with a mean hourly wage of $27.62. Assuming all dietitians are employed full-time (2,080 hours annually) yields a total sector value of $3.4 billion, or $6.8 billion when doubled to account for fringe benefits and overhead. For the May, 2014, final rule, we estimated $459 million of loaded wage savings associated with dietary ordering switching from physicians, nurse practitioners and physician assistants to lower-paid dietitians. Thus the relevant portion of the savings estimate equals roughly 6.7 percent (= $459 million ÷ $6.8 billion) of the sector as a whole—and would exceed 6.7 percent, to the extent that some current dietitian positions are part-time.

statement that are 25 percent higher or lower than our primary estimate. Accordingly, we estimate that approximately 501 CAHs (or 37 percent) have not implemented an AS program. Based on these assumptions, the minimum annual cost of the essential team members for a CAH to establish and maintain an antibiotic stewardship program would be $177,880 (($191 per hour × 0.19 × 2,000 hours per year = $72,580 for a physician) + ($117 per hour × 0.45 × 2,000 hours per year = $105,300 for a clinical pharmacist). The annual labor cost for 37 percent of CAHs ($177,880 × 501) would be approximately $89 million.

However, we believe that the estimated costs of an AS program would be somewhat offset by the savings that a CAH would achieve through such a program. The most obvious savings would be from decreased inappropriate antibiotic use leading to overall decreased drug costs for a CAH. Our review of the literature showed significant savings in this area, with annual savings proportional to bed size of the hospital. Reported annual savings ranged from $27,917 for a 12-bed medical/surgical intensive care unit to $2.1 million for an 880-bed academic medical center. We specifically note the $177,000 in annual drug cost savings achieved by a 120-bed community hospital with its AS program for the year of 2000 compared to 1999 (LaRocco 2003, CID ''Concurrent antibiotic review programs-a role for infectious diseases specialists at small community CAHs''), and would use that as the basis to calculate average annual cost savings for a 25-bed CAH. Inflating this number to 2017 dollars using the consumer price index yields approximately $258,000. Therefore, ($258,000 annual savings ÷ 120 beds = $2,150 annual cost savings per bed) at $53,750 per CAH ($2,150 annual cost savings x 25 beds). Using this assumption, we believe that the annual drug cost savings for 37 percent of all 1,353 CAHs under the rule will be approximately $27 million (501 CAHs × $53,750 in drug cost savings).

As previously explained, patient cost savings for CAHs has been estimated based on data from Scott et al., and we assume approximately 22% of HCA–CDI and recurrent cases averted would occur in CAHs. Based on the estimated 63 percent of CAHs that already have AS programs, approximately 37 percent of those averted cases would be attributable to this regulation. This comes to a total of 44,444 HCA–CDI cases averted, and 9,524 recurrent cases averted for CAHs in a 5 year period. Multiplying these averted cases by the attributable patient cost savings, and annualizing the amount, comes to approximately $89 million in annualized patient cost savings.

Accordingly, we estimate that the combined annual drug cost savings and patient cost savings will be approximately $116 million. These savings will accrue to patients (reduced out-of-pocket costs), CAHs (reduced costs and improved balance sheets), as well as healthcare insurers, including Medicare (over time, payment rates will be adjusted downward as CAH costs fall). However, we are not able to apportion the savings that would accrue to each group with any accuracy and it will inevitably change over time as insurance rates change. Regardless, healthcare-associated infections are known to be expensive to insurers, including CMS. Preventing these infections will reduce CMS and other insurer expenditures, both on direct hospital costs and through reduced re-admissions. The cost-savings estimates for CDI included in the RIA provide an example of the savings Medicare and other insurers could realize through reductions in just one HAI. Ultimately, of course, insurance costs (and the medical care they pay for) are paid by taxpayers and workers. Even the employer contribution to insurance costs is generally regarded by economists as part of worker compensation.

c. Effects on Patients

As previously mentioned, some of the estimated cost savings will accrue to patients due to decreased morbidity and associated health care costs. Although this RIA has mainly focused on the costs associated with CDI, there will be savings associated with other infections, such as staphylococcus aureus, that we have not quantified here. Nor have we quantified any savings to patients due to averted travel costs for medical appointments, reduced absence from work, or other miscellaneous costs that would be evaded by patients.

Antibiotic stewardship and infection control has also been proven to significantly reduce morbidity and mortality due to healthcare associated infections. Research by Scott et al., which has been referenced throughout this RIA, thoroughly explored the social costs and benefits of a national requirement establishing antibiotic stewardship programs to prevent CDI. The direct applicability of their study to this RIA is hindered only by differing methods of counting the effects of antimicrobial resistance and infection control. Their study quantifies the effects of AS on the entirety of hospitals with the argument that without these finalized requirements, there would be nothing holding hospitals accountable for maintaining their AS programs. However, this RIA takes into account a baseline of the current market conditions, which we believe have been strengthened by new standards set by large accrediting bodies. Nonetheless, they estimate CDI infection prevention alone to avert as many as 1.1 million inpatient cases and 44,000 deaths at a 3 percent discount rate over a 5 year period. Using estimates for quality adjusted life years, their central estimate for the value of morbidity risk reduction at a 3 percent discount rate is as much as $3 billion worth of lost quality adjusted life years from HCA–CDI, and their central estimate for the benefits of mortality risk reduction is as much as $401 billion utilizing estimates for the value of a statistical life.

d. Effects on Small Entities

The RFA requires agencies to analyze options for regulatory relief of small entities, if a rule has a significant impact on a substantial number of small entities. For purposes of the RFA, we estimate that the great majority of the providers that would be affected by CMS rules are small entities as that term is used in the RFA. The great majority of hospitals and most other healthcare providers and suppliers are small entities, either by being nonprofit organizations or by meeting the SBA definition of a small business. Accordingly, the usual practice of HHS is to treat all providers and suppliers as small entities in analyzing the effects of our rules.

These provisions of the final rule are anticipated to cost CAHs as much as $119 million in the first year. While this is a large amount in total, the average cost per affected CAH is approximately $88,000 in the first year, and slightly less in future years. Although the overall magnitude of the paperwork, staffing, and related cost reductions to hospitals and CAHs under this rule is economically significant, the net effect is likely to be a fraction of 1 percent of total hospital costs. Total national hospital care expenditure are approximately 1,143 billion dollars a year, or an average of about $185 million per hospital, and our primary estimate of the net effect of these proposals on hospital costs is approximately $79 million annually.

Under HHS guidelines for regulatory flexibility analyses, actions that do not negatively affect costs or revenues by more than 3 percent a year are generally not considered to be significant. We do not believe that hospitals of any size will be negatively affected to this

degree. Accordingly, we have determined that the rule will not have a significant economic impact on a substantial number of small entities, and certify that a final regulatory flexibility analysis is not required. Notwithstanding this conclusion, we believe that this RIA and the preamble as a whole meet the requirements of the RFA for a final regulatory flexibility analysis.

In addition, section 1102(b) of the Act requires us to prepare a regulatory impact analysis if a rule may have a significant impact on the operations of a substantial number of small rural hospitals. This analysis must conform to the provisions of section 604 of the RFA. For purposes of section 1102(b) of the Act, we define a small rural hospital as a hospital that is located outside of a metropolitan statistical area and has fewer than 100 beds. For the preceding reasons, we have determined that these provisions of the final rule will not have a significant negative impact on the operations of a substantial number of small rural hospitals.

Section 202 of the Unfunded Mandates Reform Act of 1995 (UMRA) also requires that agencies assess anticipated costs and benefits before issuing any rule whose mandates require spending in any 1 year of $100 million in 1995 dollars, updated annually for inflation. In 2019, that is approximately $154 million. These provisions of the final rule do contain private sector mandates, but their costs are generally anticipated to be mostly offset by savings. Nevertheless, this RIA and the preamble, taken together, would meet the requirements of an analysis under section 202.

Executive Order 13132 establishes certain requirements that an agency must meet when it issues a proposed rule (and subsequent final rule) that would impose substantial direct requirement costs on State and local governments, preempts State law, or otherwise has Federalism implications. These provisions of the rule will not have a substantial direct effect on State or local governments, preempt State law, or otherwise have federalism implications.

4. Alternatives Considered

As we stated, CMS is aware, through conversations with stakeholders and federal partners, and as a result of internal evaluation and research, of outstanding concerns about the CoPs for hospitals and CAHs, despite recent revisions. This subset of the universe of standards is the focus of the final rule.

One alternative we did consider was combining the infection prevention and control leader position with that of the antibiotic stewardship leader position. While this would certainly reduce the costs for hospitals by eliminating one of these positions, we also believe that it might reduce the overall effectiveness of the program and, thus, the overall societal benefits that might be achieved. The skills needed to lead each program are different. Infection prevention programs are often led by nursing staff who do not prescribe antibiotics. Antibiotic stewardship programs are led by physicians and pharmacists who have direct knowledge and experience with antibiotic prescribing. For these reasons, we decided to finalize the requirement as it is contained in this rule.

For all of the finalized provisions, we considered not making these changes. Ultimately, based on our analysis of these issues and for the reasons stated in this preamble, we believe that it is best to propose changes at this time. We welcomed comments on whether we properly selected the best candidates for change, and welcomed suggestions for additional reform candidates from the entire body of CoPs.

5. Conclusion

The financial impact of these provisions of the final rule will lie primarily with the balance between estimated costs and savings for the antibiotic stewardship program for hospitals. Nevertheless, the total costs of these provisions are anticipated to be mostly offset by savings. Moreover, the life-saving benefits of some of these provisions, including antibiotic stewardship, have been thoroughly studied and substantiated by independent researchers. However, we note that although savings and morbidity/mortality risk reductions on average are consistent with the literature we've reviewed, the outcomes for individual hospitals and CAHs will vary depending on their specific implementation strategies for AS.

In accordance with the provisions of Executive Order 12866, this regulation was reviewed by the Office of Management and Budget.

D. Accounting Statement and Table

As required by OMB Circular A–4 (available at *https://www.whitehouse.gov/sites/whitehouse.gov/files/omb/circulars/A4/a-4.pdf*), in Table 20, we have prepared an accounting statement showing the classification of the transfers and costs associated with the various provisions of the final rule.

While most provisions of the final rule have clearly predictable effects we do not in most cases have detailed empirical information on the precise magnitude of efforts involved (for example, time spent in meeting paperwork or other administrative tasks that apply to a particular provider type). Other provisions (notably those related to organ transplantation and removal of strict H&P requirements before ambulatory or outpatient surgery) have even more uncertain effect sizes. Therefore, we have estimated an upper and lower level for benefit and cost reduction estimates that is 25 percent higher or lower than our primary estimate for all quantified reforms other than those related to ambulatory surgery, and in that area our upper bound for costs is zero cost reductions and our lower bound is a 17 percent reduction in H&P and associated laboratory testing costs.

TABLE 20—ACCOUNTING STATEMENT: CLASSIFICATION OF ESTIMATED BENEFITS AND SAVINGS

[$ millions]

Category	Primary estimate	Low estimate	High estimate	Units		
				Year dollars	Discount rate	Period covered
Benefits:						
Life-Extending Benefits (monetized)	Not Quantified					
Medical Cost Reduction Benefits (monetized)	Not Quantified					

TABLE 20—ACCOUNTING STATEMENT: CLASSIFICATION OF ESTIMATED BENEFITS AND SAVINGS—Continued

[$ millions]

Category	Primary estimate	Low estimate	High estimate	Units		
				Year dollars	Discount rate	Period covered
Qualitative	Potential reductions in morbidity and mortality for hospital and CAH patients					
Costs:						
Annualized Monetized Costs (+) or Savings (−) ($million/year)	−801	−1,127	−485	2017	7%	2019–2028
	−803	−1,128	−487	2017	3%	2019–2028
Transfers	None					

E. Regulatory Reform Analysis Under E.O. 13771

Executive Order 13771, titled Reducing Regulation and Controlling Regulatory Costs, was issued on January 30, 2017 and requires that the costs associated with significant new regulations ''shall, to the extent permitted by law, be offset by the elimination of existing costs associated with at least two prior regulations.'' This final rule is considered an E.O. 13771 deregulatory action. We estimate that this rule generates $647 million in annualized cost savings in 2016 dollars, discounted at 7 percent relative to year 2016, over a perpetual time horizon. Details on the estimated cost savings of this rule can be found in the preceding analyses.

List of Subjects

42 CFR Part 403

Grant programs—health, Health insurance, Hospitals, Intergovernmental relations, Medicare, Reporting and recordkeeping requirements.

42 CFR Part 416

Health facilities, Health professions, Medicare, Reporting and recordkeeping requirements.

42 CFR Part 418

Health facilities, Hospice care, Medicare, Reporting and recordkeeping requirements.

42 CFR Part 441

Aged, Family planning, Grant programs—health, Infants and children, Medicaid, Penalties, Reporting and recordkeeping requirements.

42 CFR Part 460

Aged, Health care, Health records, Medicaid, Medicare, Reporting and recordkeeping requirements.

42 CFR Part 482

Grant program—health, Hospitals, Medicaid, Medicare, Reporting and recordkeeping requirements.

42 CFR Part 483

Grant programs—health, Health facilities, Health professions, Health records, Medicaid, Medicare, Nursing home, Nutrition, Reporting and recordkeeping requirements, Safety.

42 CFR Part 484

Health facilities, Health professions, Medicare, Reporting and recordkeeping requirements.

42 CFR Part 485

Grant programs—health, Health facilities, Medicaid, Reporting and recordkeeping requirements.

42 CFR Part 486

Grant programs—health, Health facilities, Medicare, Reporting and recordkeeping requirements, X-rays.

42 CFR Part 488

Administrative practice and procedures, Health facilities, Health professions, Medicare, Reporting and recordkeeping requirements.

42 CFR Part 491

Grant programs—health, Health facilities, Medicaid, Medicare, Reporting and recordkeeping requirements, Rural and urban areas.

42 CFR Part 494

Diseases, Health facilities, Incorporation by Reference, Medicare, Reporting and recordkeeping requirements.

For the reasons set forth in the preamble, the Centers for Medicare & Medicaid Services amends 42 CFR chapter IV as set forth below:

PART 403—SPECIAL PROGRAMS AND PROJECTS

■ 1. The authority citation for part 403 is revised to read as follows:

Authority: 42 U.S.C. 1302 and 1395hh.

■ 2. Section 403.736 is amended by—
■ a. Removing the introductory text;
■ b. Revising paragraph (a);
■ c. Removing paragraph (b); and
■ d. Redesignating paragraphs (c) and (d) as paragraphs (b) and (c).

The revision reads as follows:

§ 403.736 Condition of participation: Discharge planning.

(a) *Discharge planning and instructions.* The RNHCI must have in effect a discharge planning process that applies to all patients. The process must assure that appropriate post-institution services are obtained for each patient, as necessary. The RNHCI must assess the need for a discharge plan for any patient likely to suffer adverse consequences if there is no planning.

(1) Discharge instructions must be provided at the time of discharge to the patient or the patient's caregiver as necessary.

(2) If the patient assessment indicates a need for a discharge plan, the discharge plan must include instructions on post-RNHCI care to be used by the patient or the caregiver in the patient's home, as identified in the discharge plan.

(3) If the RNHCI's patient assessment does not indicate a need for a discharge plan, the beneficiary or his or her legal representative may request a discharge plan. In this case, the RNHCI must develop a discharge plan for the beneficiary.

* * * * *

■ 3. Section 403.748 is amended by—
■ a. Revising paragraphs (a) introductory text, (a)(4), (b) introductory text, (c) introductory text, (d) introductory text, and (d)(1)(ii); and
■ b. Adding paragraph (d)(1)(v).

The revisions and addition read as follows:

§ 403.748 Condition of participation: Emergency preparedness.

* * * * *

(a) *Emergency plan.* The RNHCI must develop and maintain an emergency preparedness plan that must be reviewed, and updated at least every 2 years. The plan must do all of the following:

* * * * *

(4) Include a process for cooperation and collaboration with local, tribal, regional, State, and Federal emergency preparedness officials' efforts to maintain an integrated response during a disaster or emergency situation.

(b) *Policies and procedures.* The RNHCI must develop and implement emergency preparedness policies and procedures, based on the emergency plan set forth in paragraph (a) of this section, risk assessment at paragraph (a)(1) of this section, and the communication plan at paragraph (c) of this section. The policies and procedures must be reviewed and updated at least every 2 years. At a minimum, the policies and procedures must address the following:

* * * * *

(c) *Communication plan.* The RNHCI must develop and maintain an emergency preparedness communication plan that complies with Federal, State, and local laws and must be reviewed and updated at least every 2 years. The communication plan must include all of the following:

* * * * *

(d) *Training and testing.* The RNHCI must develop and maintain an emergency preparedness training and testing program that is based on the emergency plan set forth in paragraph (a) of this section, risk assessment at paragraph (a)(1) of this section, policies and procedures at paragraph (b) of this section, and the communication plan at paragraph (c) of this section. The training and testing program must be reviewed and updated at least every 2 years.

(1) * * *

(ii) Provide emergency preparedness training at least every 2 years.

* * * * *

(v) If the emergency preparedness policies and procedures are significantly updated, the RNHCI must conduct training on the updated policies and procedures.

* * * * *

PART 416—AMBULATORY SURGICAL SERVICES

■ 4. The authority citation for part 416 continues to read as follows:

Authority: 42 U.S.C. 273, 1302, 1320b–8, and 1395hh.

■ 5. Section 416.41 is amended by revising paragraph (b)(3) to read as follows:

§ 416.41 Condition for coverage—Governing body and management.

* * * * *

(b) * * *

(3) The ASC must periodically provide the local hospital with written notice of its operations and patient population served.

■ 6. Section 416.47 is amended by revising paragraph (b)(2) to read as follows:

§ 416.47 Condition for coverage—Medical records.

* * * * *

(b) * * *

(2) Significant medical history and results of physical examination (as applicable).

* * * * *

■ 7. Section 416.52 is amended by revising paragraph (a) to read as follows:

§ 416.52 Condition for coverage—Patient admission, assessment and discharge.

* * * * *

(a) *Standard: Patient assessment and admission.* (1) The ASC must develop and maintain a policy that identifies those patients who require a medical history and physical examination prior to surgery. The policy must—

(i) Include the timeframe for medical history and physical examination to be completed prior to surgery.

(ii) Address, but is not limited to, the following factors: Patient age, diagnosis, the type and number of procedures scheduled to be performed on the same surgery date, known comorbidities, and the planned anesthesia level.

(iii) Be based on any applicable nationally recognized standards of practice and guidelines, and any applicable State and local health and safety laws.

(2) Upon admission, each patient must have a pre-surgical assessment completed by a physician who will be performing the surgery or other qualified practitioner in accordance with applicable State health and safety laws, standards of practice, and ASC policy.

(3) The pre-surgical assessment must include documentation of any allergies to drugs and biologicals.

(4) The patient's medical history and physical examination (if any) must be placed in the patient's medical record prior to the surgical procedure.

* * * * *

■ 8. Section 416.54 is amended by—

■ a. Revising paragraphs (a) introductory text, (a)(4), (b) introductory text, (c) introductory text, (d) introductory text, and (d)(1)(ii);

■ b. Adding paragraph (d)(1)(v); and

■ c. Revising paragraph (d)(2).

The revisions and addition read as follows:

§ 416.54 Condition for coverage—Emergency preparedness.

* * * * *

(a) *Emergency plan.* The ASC must develop and maintain an emergency preparedness plan that must be reviewed, and updated at least every 2 years. The plan must do the following:

* * * * *

(4) Include a process for cooperation and collaboration with local, tribal, regional, State, and Federal emergency preparedness officials' efforts to maintain an integrated response during a disaster or emergency situation.

(b) *Policies and procedures.* The ASC must develop and implement emergency preparedness policies and procedures, based on the emergency plan set forth in paragraph (a) of this section, risk assessment at paragraph (a)(1) of this section, and the communication plan at paragraph (c) of this section. The policies and procedures must be reviewed and updated at least every 2 years. At a minimum, the policies and procedures must address the following:

* * * * *

(c) *Communication plan.* The ASC must develop and maintain an emergency preparedness communication plan that complies with Federal, State, and local laws and must be reviewed and updated at least every 2 years. The communication plan must include all of the following:

* * * * *

(d) *Training and testing.* The ASC must develop and maintain an emergency preparedness training and testing program that is based on the emergency plan set forth in paragraph (a) of this section, risk assessment at paragraph (a)(1) of this section, policies and procedures at paragraph (b) of this section, and the communication plan at paragraph (c) of this section. The training and testing program must be reviewed and updated at least every 2 years.

(1) * * *

(ii) Provide emergency preparedness training at least every 2 years.

* * * * *

(v) If the emergency preparedness policies and procedures are significantly updated, the ASC must conduct training on the updated policies and procedures.

(2) *Testing.* The ASC must conduct exercises to test the emergency plan at least annually. The ASC must do the following:

(i) Participate in a full-scale exercise that is community-based every 2 years; or

(A) When a community-based exercise is not accessible, conduct a facility-based functional exercise every 2 years; or

(B) If the ASC experiences an actual natural or man-made emergency that requires activation of the emergency plan, the ASC is exempt from engaging in its next required community-based or individual, facility-based functional exercise following the onset of the emergency event.

(ii) Conduct an additional exercise at least every 2 years, opposite the year the full-scale or functional exercise under paragraph (d)(2)(i) of this section is conducted, that may include, but is not limited to the following:

(A) A second full-scale exercise that is community-based, or an individual, facility-based functional exercise; or

(B) A mock disaster drill; or

(C) A tabletop exercise or workshop that is led by a facilitator and includes a group discussion using a narrated, clinically-relevant emergency scenario, and a set of problem statements, directed messages, or prepared questions designed to challenge an emergency plan.

(iii) Analyze the ASC's response to and maintain documentation of all drills, tabletop exercises, and emergency events and revise the ASC's emergency plan, as needed.

* * * * *

PART 418—HOSPICE CARE

■ 9. The authority citation for part 418 is revised to read as follows:

Authority: 42 U.S.C. 1302 and 1395hh.

■ 10. Section 418.76 is amended by revising paragraph (a)(1)(iv) to read as follows:

§ 418.76 Condition of participation: Hospice aide and homemaker services.

* * * * *

(a) * * *

(1) * * *

(iv) A State licensure program.

* * * * *

§ 418.106 [Amended]

■ 11. Section 418.106 is amended by—

■ a. Removing paragraph (a)(1);

■ b. Redesignating paragraph (a)(2) as paragraph (a)(1); and

■ c. Adding a new reserved paragraph (a)(2).

■ 12. Section 418.112 is amended by revising paragraph (f) to read as follows:

§ 418.112 Condition of participation: Hospices that provide hospice care to residents of a SNF/NF or ICF/IID.

* * * * *

(f) *Standard: Orientation and training of staff.* Hospice staff, in coordination with SNF/NF or ICF/IID facility staff, must assure orientation of such staff furnishing care to hospice patients in the hospice philosophy, including hospice policies and procedures regarding methods of comfort, pain control, symptom management, as well as principles about death and dying, individual responses to death, patient rights, appropriate forms, and record keeping requirements.

■ 13. Section 418.113 is amended by—

■ a. Revising paragraphs (a) introductory text, (a)(4), (b) introductory text, (c) introductory text, (d) introductory text, and (d)(1)(iii);

■ b. Adding paragraph (d)(1)(vi);

■ c. Revising paragraph (d)(2); and

■ d. Adding paragraph (d)(3).

The revisions and additions read as follows:

§ 418.113 Condition of participation: Emergency preparedness.

* * * * *

(a) *Emergency plan.* The hospice must develop and maintain an emergency preparedness plan that must be reviewed, and updated at least every 2 years. The plan must do the following:

* * * * *

(4) Include a process for cooperation and collaboration with local, tribal, regional, State, or Federal emergency preparedness officials' efforts to maintain an integrated response during a disaster or emergency situation.

(b) *Policies and procedures.* The hospice must develop and implement emergency preparedness policies and procedures, based on the emergency plan set forth in paragraph (a) of this section, risk assessment at paragraph (a)(1) of this section, and the communication plan at paragraph (c) of this section. The policies and procedures must be reviewed and updated at least every 2 years. At a minimum, the policies and procedures must address the following:

* * * * *

(c) *Communication plan.* The hospice must develop and maintain an emergency preparedness communication plan that complies with Federal, State, and local laws and must be reviewed and updated at least every 2 years. The communication plan must include all of the following:

* * * * *

(d) *Training and testing.* The hospice must develop and maintain an emergency preparedness training and testing program that is based on the emergency plan set forth in paragraph (a) of this section, risk assessment at paragraph (a)(1) of this section, policies and procedures at paragraph (b) of this section, and the communication plan at paragraph (c) of this section. The training and testing program must be reviewed and updated at least every 2 years.

(1) * * *

(iii) Provide emergency preparedness training at least every 2 years.

* * * * *

(vi) If the emergency preparedness policies and procedures are significantly updated, the hospice must conduct training on the updated policies and procedures.

(2) *Testing for hospices that provide care in the patient's home.* The hospice must conduct exercises to test the emergency plan at least annually. The hospice must do the following:

(i) Participate in a full-scale exercise that is community-based every 2 years; or

(A) When a community-based exercise is not accessible, conduct an individual facility-based functional exercise every 2 years; or

(B) If the hospice experiences a natural or man-made emergency that requires activation of the emergency plan, the hospital is exempt from engaging in its next required full-scale community-based exercise or individual facility-based functional exercise following the onset of the emergency event.

(ii) Conduct an additional exercise every 2 years, opposite the year the full-scale or functional exercise under paragraph (d)(2)(i) of this section is conducted, that may include, but is not limited to the following:

(A) A second full-scale exercise that is community-based or a facility-based functional exercise; or

(B) A mock disaster drill; or

(C) A tabletop exercise or workshop that is led by a facilitator and includes a group discussion using a narrated, clinically-relevant emergency scenario, and a set of problem statements, directed messages, or prepared questions designed to challenge an emergency plan.

(3) *Testing for hospices that provide inpatient care directly.* The hospice must conduct exercises to test the emergency plan twice per year. The hospice must do the following:

(i) Participate in an annual full-scale exercise that is community-based; or

(A) When a community-based exercise is not accessible, conduct an annual individual facility-based functional exercise; or

(B) If the hospice experiences a natural or man-made emergency that requires activation of the emergency plan, the hospice is exempt from engaging in its next required full-scale community-based or facility-based functional exercise following the onset of the emergency event.

(ii) Conduct an additional annual exercise that may include, but is not limited to the following:

(A) A second full-scale exercise that is community-based or a facility-based functional exercise; or

(B) A mock disaster drill; or

(C) A tabletop exercise or workshop led by a facilitator that includes a group discussion using a narrated, clinically-relevant emergency scenario, and a set of problem statements, directed messages, or prepared questions designed to challenge an emergency plan.

(iii) Analyze the hospice's response to and maintain documentation of all drills, tabletop exercises, and emergency events and revise the hospice's emergency plan, as needed.

* * * * *

PART 441—SERVICES: REQUIREMENTS AND LIMITS APPLICABLE TO SPECIFIC SERVICES

■ 14. The authority citation for part 441 is revised to read as follows:

Authority: 42 U.S.C. 1302.

■ 15. Section 441.184 is amended by—

■ a. Revising paragraphs (a) introductory text, (a)(4), (b) introductory text, (c) introductory text, (d) introductory text, and (d)(1)(ii);

■ b. Adding paragraph (d)(1)(v); and

■ c. Revising paragraph (d)(2).

The revisions and addition read as follows:

§ 441.184 Emergency preparedness.

* * * * *

(a) *Emergency plan.* The PRTF must develop and maintain an emergency preparedness plan that must be reviewed, and updated at least every 2 years. The plan must do the following:

* * * * *

(4) Include a process for cooperation and collaboration with local, tribal, regional, State, and Federal emergency preparedness officials' efforts to maintain an integrated response during a disaster or emergency situation.

(b) *Policies and procedures.* The PRTF must develop and implement emergency preparedness policies and procedures, based on the emergency plan set forth in paragraph (a) of this section, risk assessment at paragraph (a)(1) of this section, and the communication plan at paragraph (c) of this section. The policies and procedures must be reviewed and updated at least every 2 years. At a minimum, the policies and procedures must address the following:

* * * * *

(c) *Communication plan.* The PRTF must develop and maintain an emergency preparedness communication plan that complies with Federal, State, and local laws and must be reviewed and updated at least every 2 years. The communication plan must include all of the following:

* * * * *

(d) *Training and testing.* The PRTF must develop and maintain an emergency preparedness training program that is based on the emergency plan set forth in paragraph (a) of this section, risk assessment at paragraph (a)(1) of this section, policies and procedures at paragraph (b) of this section, and the communication plan at paragraph (c) of this section. The training and testing program must be reviewed and updated at least every 2 years.

(1) * * *

(ii) After initial training, provide emergency preparedness training every 2 years.

* * * * *

(v) If the emergency preparedness policies and procedures are significantly updated, the PRTF must conduct training on the updated policies and procedures.

(2) *Testing.* The PRTF must conduct exercises to test the emergency plan twice per year. The PRTF must do the following:

(i) Participate in an annual full-scale exercise that is community-based; or

(A) When a community-based exercise is not accessible, conduct an annual individual, facility-based functional exercise; or

(B) If the PRTF experiences an actual natural or man-made emergency that requires activation of the emergency plan, the PRTF is exempt from engaging in its next required full-scale community-based or individual, facility-based functional exercise following the onset of the emergency event.

(ii) Conduct an additional annual exercise that may include, but is not limited to the following:

(A) A second full-scale exercise that is community-based or individual, a facility-based functional exercise; or

(B) A mock disaster drill; or

(C) A tabletop exercise or workshop that is led by a facilitator and includes a group discussion, using a narrated, clinically-relevant emergency scenario, and a set of problem statements, directed messages, or prepared questions designed to challenge an emergency plan.

(iii) Analyze the PRTF's response to and maintain documentation of all drills, tabletop exercises, and emergency events and revise the PRTF's emergency plan, as needed.

* * * * *

PART 460—PROGRAMS OF ALL-INCLUSIVE CARE FOR THE ELDERLY (PACE)

■ 16. The authority citation for part 460 is revised to read as follows:

Authority: 42 U.S.C. 1302, 1395, 1395eee(f), and 1396u–4(f).

■ 17. Section 460.84 is amended by—

■ a. Revising paragraphs (a) introductory text, (a)(4), (b) introductory text, (c) introductory text, (d) introductory text, and (d)(1)(ii);

■ b. Adding paragraph (d)(1)(v); and

■ c. Revising paragraph (d)(2).

The revisions and addition read as follows:

§ 460.84 Emergency preparedness.

* * * * *

(a) *Emergency plan.* The PACE organization must develop and maintain an emergency preparedness plan that must be reviewed, and updated at least every 2 years. The plan must do the following:

* * * * *

(4) Include a process for cooperation and collaboration with local, tribal, regional, State, and Federal emergency preparedness officials' efforts to maintain an integrated response during a disaster or emergency situation.

(b) *Policies and procedures.* The PACE organization must develop and implement emergency preparedness policies and procedures, based on the emergency plan set forth in paragraph (a) of this section, risk assessment at paragraph (a)(1) of this section, and the communication plan at paragraph (c) of this section. The policies and procedures must address management of medical and nonmedical emergencies, including, but not limited to: Fire; equipment, power, or water

failure; care-related emergencies; and natural disasters likely to threaten the health or safety of the participants, staff, or the public. Policies and procedures must be reviewed and updated at least every 2 years. At a minimum, the policies and procedures must address the following:

* * * * *

(c) *Communication plan.* The PACE organization must develop and maintain an emergency preparedness communication plan that complies with Federal, State, and local laws and must be reviewed and updated at least every 2 years. The communication plan must include all of the following:

* * * * *

(d) *Training and testing.* The PACE organization must develop and maintain an emergency preparedness training and testing program that is based on the emergency plan set forth in paragraph (a) of this section, risk assessment at paragraph (a)(1) of this section, policies and procedures at paragraph (b) of this section, and the communication plan at paragraph (c) of this section. The training and testing program must be reviewed and updated at least every 2 years.

(1) * * *

(ii) Provide emergency preparedness training at least every 2 years.

* * * * *

(v) If the emergency preparedness policies and procedures are significantly updated, the PACE must conduct training on the updated policies and procedures.

(2) *Testing.* The PACE organization must conduct exercises to test the emergency plan at least annually. The PACE organization must do the following:

(i) Participate in a full-scale exercise that is community-based or;

(A) When a community-based exercise is not accessible, conduct an annual individual, facility-based functional exercise every 2 years; or

(B) If the PACE experiences an actual natural or man-made emergency that requires activation of the emergency plan, the PACE is exempt from engaging in its next required full-scale community-based or individual, facility-based functional exercise following the onset of the emergency event.

(ii) Conduct an additional exercise every 2 years opposite the year the full-scale or functional exercise under paragraph (d)(2)(i) of this section is conducted that may include, but is not limited to the following:

(A) A second full-scale exercise that is community-based or an individual, facility-based functional exercise; or

(B) A mock disaster drill; or

(C) A tabletop exercise or workshop that is led by a facilitator and includes a group discussion, using a narrated, clinically-relevant emergency scenario, and a set of problem statements, directed messages, or prepared questions designed to challenge an emergency plan.

(iii) Analyze the PACE's response to and maintain documentation of all drills, tabletop exercises, and emergency events and revise the PACE's emergency plan, as needed.

* * * * *

PART 482—CONDITIONS OF PARTICIPATION FOR HOSPITALS

■ 18. The authority citation for part 482 is revised to read as follows:

Authority: 42 U.S.C. 1302, 1395hh, and 1395rr, unless otherwise noted.

■ 19. Section 482.13 is amended by revising paragraphs (e)(5), (e)(8)(ii), (e)(10) and (11), (e)(12)(i), (e)(14), and (g)(4)(ii) to read as follows:

§ 482.13 Condition of participation: Patient's rights.

* * * * *

(e) * * *

(5) The use of restraint or seclusion must be in accordance with the order of a physician or other licensed practitioner who is responsible for the care of the patient and authorized to order restraint or seclusion by hospital policy in accordance with State law.

* * * * *

(8) * * *

(ii) After 24 hours, before writing a new order for the use of restraint or seclusion for the management of violent or self-destructive behavior, a physician or other licensed practitioner who is responsible for the care of the patient and authorized to order restraint or seclusion by hospital policy in accordance with State law must see and assess the patient.

* * * * *

(10) The condition of the patient who is restrained or secluded must be monitored by a physician, other licensed practitioner, or trained staff that have completed the training criteria specified in paragraph (f) of this section at an interval determined by hospital policy.

(11) Physician and other licensed practitioner training requirements must be specified in hospital policy. At a minimum, physicians and other licensed practitioners authorized to order restraint or seclusion by hospital policy in accordance with State law must have a working knowledge of hospital policy regarding the use of restraint or seclusion.

(12) * * *

(i) By a—

(A) Physician or other licensed practitioner.

(B) Registered nurse who has been trained in accordance with the requirements specified in paragraph (f) of this section.

* * * * *

(14) If the face-to-face evaluation specified in paragraph (e)(12) of this section is conducted by a trained registered nurse, the trained registered nurse must consult the attending physician or other licensed practitioner who is responsible for the care of the patient as soon as possible after the completion of the 1-hour face-to-face evaluation.

* * * * *

(g) * * *

(4) * * *

(ii) Each entry must document the patient's name, date of birth, date of death, name of attending physician or other licensed practitioner who is responsible for the care of the patient, medical record number, and primary diagnosis(es).

* * * * *

■ 20. Section 482.15 is amended—

■ a. By revising paragraphs (a) introductory text, (a)(4), (b) introductory text, (c) introductory text, (d) introductory text, and (d)(1)(ii);

■ b. By adding paragraph (d)(1)(v);

■ c. By revising paragraph (d)(2);

■ d. In paragraph (g) introductory text, by removing the phrase ''transplant centers'' and adding into its place the phrase ''transplant programs''; and

■ e. In paragraphs (g)(1) and (2), by removing the phrase ''transplant center'' and adding into its place the phrase ''transplant program''.

The revisions and addition read as follows:

§ 482.15 Condition of participation: Emergency preparedness.

* * * * *

(a) *Emergency plan.* The hospital must develop and maintain an emergency preparedness plan that must be reviewed, and updated at least every 2 years. The plan must do the following:

* * * * *

(4) Include a process for cooperation and collaboration with local, tribal, regional, State, and Federal emergency preparedness officials' efforts to maintain an integrated response during a disaster or emergency situation.

(b) *Policies and procedures.* The hospital must develop and implement emergency preparedness policies and

procedures, based on the emergency plan set forth in paragraph (a) of this section, risk assessment at paragraph (a)(1) of this section, and the communication plan at paragraph (c) of this section. The policies and procedures must be reviewed and updated at least every 2 years. At a minimum, the policies and procedures must address the following:

* * * * *

(c) *Communication plan.* The hospital must develop and maintain an emergency preparedness communication plan that complies with Federal, State, and local laws and must be reviewed and updated at least every 2 years. The communication plan must include all of the following:

* * * * *

(d) *Training and testing.* The hospital must develop and maintain an emergency preparedness training and testing program that is based on the emergency plan set forth in paragraph (a) of this section, risk assessment at paragraph (a)(1) of this section, policies and procedures at paragraph (b) of this section, and the communication plan at paragraph (c) of this section. The training and testing program must be reviewed and updated at least every 2 years.

(1) * * *

(ii) Provide emergency preparedness training at least every 2 years.

* * * * *

(v) If the emergency preparedness policies and procedures are significantly updated, the hospital must conduct training on the updated policies and procedures.

(2) *Testing.* The hospital must conduct exercises to test the emergency plan at least twice per year. The hospital must do all of the following:

(i) Participate in an annual full-scale exercise that is community-based; or

(A) When a community-based exercise is not accessible, conduct an annual individual, facility-based functional exercise; or.

(B) If the hospital experiences an actual natural or man-made emergency that requires activation of the emergency plan, the hospital is exempt from engaging in its next required full-scale community-based exercise or individual, facility-based functional exercise following the onset of the emergency event.

(ii) Conduct an additional annual exercise that may include, but is not limited to the following:

(A) A second full-scale exercise that is community-based or an individual, facility-based functional exercise; or

(B) A mock disaster drill; or

(C) A tabletop exercise or workshop that is led by a facilitator and includes a group discussion, using a narrated, clinically-relevant emergency scenario, and a set of problem statements, directed messages, or prepared questions designed to challenge an emergency plan.

(iii) Analyze the hospital's response to and maintain documentation of all drills, tabletop exercises, and emergency events, and revise the hospital's emergency plan, as needed.

* * * * *

■ 21. Section 482.21 is amended by revising paragraph (b)(1) and adding paragraph (f) to read as follows:

§ 482.21 Condition of participation: Quality assessment and performance improvement program.

* * * * *

(b) * * *

(1) The program must incorporate quality indicator data including patient care data, and other relevant data such as data submitted to or received from Medicare quality reporting and quality performance programs, including but not limited to data related to hospital readmissions and hospital-acquired conditions.

* * * * *

(f) *Standard: Unified and integrated QAPI program for multi-hospital systems.* If a hospital is part of a hospital system consisting of multiple separately certified hospitals using a system governing body that is legally responsible for the conduct of two or more hospitals, the system governing body can elect to have a unified and integrated QAPI program for all of its member hospitals after determining that such a decision is in accordance with all applicable State and local laws. The system governing body is responsible and accountable for ensuring that each of its separately certified hospitals meets all of the requirements of this section. Each separately certified hospital subject to the system governing body must demonstrate that:

(1) The unified and integrated QAPI program is established in a manner that takes into account each member hospital's unique circumstances and any significant differences in patient populations and services offered in each hospital; and

(2) The unified and integrated QAPI program establishes and implements policies and procedures to ensure that the needs and concerns of each of its separately certified hospitals, regardless of practice or location, are given due consideration, and that the unified and integrated QAPI program has mechanisms in place to ensure that issues localized to particular hospitals are duly considered and addressed.

■ 22. Section 482.22 is amended by—

■ a. Revising paragraphs (c)(5)(i) and (ii);

■ b. Adding paragraphs (c)(5)(iii), (iv), and (v); and

■ c. Removing paragraph (d).

The revisions and additions read as follows:

§ 482.22 Condition of participation: Medical staff.

* * * * *

(c) * * *

(5) * * *

(i) A medical history and physical examination be completed and documented for each patient no more than 30 days before or 24 hours after admission or registration, but prior to surgery or a procedure requiring anesthesia services, and except as provided under paragraph (c)(5)(iii) of this section. The medical history and physical examination must be completed and documented by a physician (as defined in section 1861(r) of the Act), an oral and maxillofacial surgeon, or other qualified licensed individual in accordance with State law and hospital policy.

(ii) An updated examination of the patient, including any changes in the patient's condition, be completed and documented within 24 hours after admission or registration, but prior to surgery or a procedure requiring anesthesia services, when the medical history and physical examination are completed within 30 days before admission or registration, and except as provided under paragraph (c)(5)(iii) of this section. The updated examination of the patient, including any changes in the patient's condition, must be completed and documented by a physician (as defined in section 1861(r) of the Act), an oral and maxillofacial surgeon, or other qualified licensed individual in accordance with State law and hospital policy.

(iii) An assessment of the patient (in lieu of the requirements of paragraphs (c)(5)(i) and (ii) of this section) be completed and documented after registration, but prior to surgery or a procedure requiring anesthesia services, when the patient is receiving specific outpatient surgical or procedural services and when the medical staff has chosen to develop and maintain a policy that identifies, in accordance with the requirements at paragraph (c)(5)(v) of this section, specific patients as not requiring a comprehensive medical history and physical examination, or any update to it, prior to specific

outpatient surgical or procedural services. The assessment must be completed and documented by a physician (as defined in section 1861(r) of the Act), an oral and maxillofacial surgeon, or other qualified licensed individual in accordance with State law and hospital policy.

(iv) The medical staff develop and maintain a policy that identifies those patients for whom the assessment requirements of paragraph (c)(5)(iii) of this section would apply. The provisions of paragraphs (c)(5)(iii), (iv), and (v) of this section do not apply to a medical staff that chooses to maintain a policy that adheres to the requirements of paragraphs of (c)(5)(i) and (ii) of this section for all patients.

(v) The medical staff, if it chooses to develop and maintain a policy for the identification of specific patients to whom the assessment requirements in paragraph (c)(5)(iii) of this section would apply, must demonstrate evidence that the policy applies only to those patients receiving specific outpatient surgical or procedural services as well as evidence that the policy is based on:

(A) Patient age, diagnoses, the type and number of surgeries and procedures scheduled to be performed, comorbidities, and the level of anesthesia required for the surgery or procedure.

(B) Nationally recognized guidelines and standards of practice for assessment of specific types of patients prior to specific outpatient surgeries and procedures.

(C) Applicable state and local health and safety laws.

* * * * *

■ 23. Section 482.23 is amended by
■ a. Revising paragraphs (b) introductory text and (b)(4) and (6);
■ b. Adding paragraph (b)(7); and
■ c. Revising (c)(1) introductory text and (c)(3).

The revisions and addition read as follows:

§ 482.23 Condition of participation: Nursing services.

* * * * *

(b) *Standard: Staffing and delivery of care.* The nursing service must have adequate numbers of licensed registered nurses, licensed practical (vocational) nurses, and other personnel to provide nursing care to all patients as needed. There must be supervisory and staff personnel for each department or nursing unit to ensure, when needed, the immediate availability of a registered nurse for the care of any patient.

* * * * *

(4) The hospital must ensure that the nursing staff develops and keeps current a nursing care plan for each patient that reflects the patient's goals and the nursing care to be provided to meet the patient's needs. The nursing care plan may be part of an interdisciplinary care plan.

* * * * *

(6) All licensed nurses who provide services in the hospital must adhere to the policies and procedures of the hospital. The director of nursing service must provide for the adequate supervision and evaluation of the clinical activities of all nursing personnel which occur within the responsibility of the nursing service, regardless of the mechanism through which those personnel are providing services (that is, hospital employee, contract, lease, other agreement, or volunteer).

(7) The hospital must have policies and procedures in place establishing which outpatient departments, if any, are not required under hospital policy to have a registered nurse present. The policies and procedures must:

(i) Establish the criteria such outpatient departments must meet, taking into account the types of services delivered, the general level of acuity of patients served by the department, and the established standards of practice for the services delivered;

(ii) Establish alternative staffing plans;

(iii) Be approved by the director of nursing;

(iv) Be reviewed at least once every 3 years.

(c) * * *

(1) Drugs and biologicals must be prepared and administered in accordance with Federal and State laws, the orders of the practitioner or practitioners responsible for the patient's care, and accepted standards of practice.

* * * * *

(3) With the exception of influenza and pneumococcal vaccines, which may be administered per physician-approved hospital policy after an assessment of contraindications, orders for drugs and biologicals must be documented and signed by a practitioner who is authorized to write orders in accordance with State law and hospital policy, and who is responsible for the care of the patient.

(i) If verbal orders are used, they are to be used infrequently.

(ii) When verbal orders are used, they must only be accepted by persons who are authorized to do so by hospital policy and procedures consistent with Federal and State law.

(iii) Orders for drugs and biologicals may be documented and signed by other practitioners only if such practitioners are acting in accordance with State law, including scope-of-practice laws, hospital policies, and medical staff bylaws, rules, and regulations.

* * * * *

■ 24. Section 482.24 is amended by revising paragraphs (c)(4)(i)(A) and (B), and adding paragraph (c)(4)(i)(C) to read as follows:

§ 482.24 Condition of participation: Medical record services.

* * * * *

(c) * * *

(4) * * *

(i) * * *

(A) A medical history and physical examination completed and documented no more than 30 days before or 24 hours after admission or registration, but prior to surgery or a procedure requiring anesthesia services, and except as provided under paragraph (c)(4)(i)(C) of this section. The medical history and physical examination must be placed in the patient's medical record within 24 hours after admission or registration, but prior to surgery or a procedure requiring anesthesia services.

(B) An updated examination of the patient, including any changes in the patient's condition, when the medical history and physical examination are completed within 30 days before admission or registration, and except as provided under paragraph (c)(4)(i)(C) of this section. Documentation of the updated examination must be placed in the patient's medical record within 24 hours after admission or registration, but prior to surgery or a procedure requiring anesthesia services.

(C) An assessment of the patient (in lieu of the requirements of paragraphs (c)(4)(i)(A) and (B) of this section) completed and documented after registration, but prior to surgery or a procedure requiring anesthesia services, when the patient is receiving specific outpatient surgical or procedural services and when the medical staff has chosen to develop and maintain a policy that identifies, in accordance with the requirements at § 482.22(c)(5)(v), specific patients as not requiring a comprehensive medical history and physical examination, or any update to it, prior to specific outpatient surgical or procedural services.

* * * * *

■ 25. Section 482.27 is amended by revising paragraph (b)(7) and removing paragraph (b)(11).

The revision reads as follows:

§ 482.27 Condition of participation: Laboratory services.

* * * * *

(b) * * *

(7) *Timeframe for notification*— For donors tested on or after February 20, 2008. For notifications resulting from donors tested on or after February 20, 2008 as set forth at 21 CFR 610.46 and 610.47 the notification effort begins when the blood collecting establishment notifies the hospital that it received potentially HIV or HCV infectious blood and blood components. The hospital must make reasonable attempts to give notification over a period of 12 weeks unless—

(i) The patient is located and notified; or

(ii) The hospital is unable to locate the patient and documents in the patient's medical record the extenuating circumstances beyond the hospital's control that caused the notification timeframe to exceed 12 weeks.

* * * * *

■ 26. Section 482.42 is revised to read as follows:

§ 482.42 Condition of participation: Infection prevention and control and antibiotic stewardship programs.

The hospital must have active hospital-wide programs for the surveillance, prevention, and control of HAIs and other infectious diseases, and for the optimization of antibiotic use through stewardship. The programs must demonstrate adherence to nationally recognized infection prevention and control guidelines, as well as to best practices for improving antibiotic use where applicable, and for reducing the development and transmission of HAIs and antibiotic-resistant organisms. Infection prevention and control problems and antibiotic use issues identified in the programs must be addressed in collaboration with the hospital-wide quality assessment and performance improvement (QAPI) program.

(a) *Standard: Infection prevention and control program organization and policies.* The hospital must demonstrate that:

(1) An individual (or individuals), who is qualified through education, training, experience, or certification in infection prevention and control, is appointed by the governing body as the infection preventionist(s)/infection control professional(s) responsible for the infection prevention and control program and that the appointment is based on the recommendations of medical staff leadership and nursing leadership;

(2) The hospital infection prevention and control program, as documented in its policies and procedures, employs methods for preventing and controlling the transmission of infections within the hospital and between the hospital and other institutions and settings;

(3) The infection prevention and control program includes surveillance, prevention, and control of HAIs, including maintaining a clean and sanitary environment to avoid sources and transmission of infection, and addresses any infection control issues identified by public health authorities; and

(4) The infection prevention and control program reflects the scope and complexity of the hospital services provided.

(b) *Standard: Antibiotic stewardship program organization and policies.* The hospital must demonstrate that:

(1) An individual (or individuals), who is qualified through education, training, or experience in infectious diseases and/or antibiotic stewardship, is appointed by the governing body as the leader(s) of the antibiotic stewardship program and that the appointment is based on the recommendations of medical staff leadership and pharmacy leadership;

(2) The hospital-wide antibiotic stewardship program:

(i) Demonstrates coordination among all components of the hospital responsible for antibiotic use and resistance, including, but not limited to, the infection prevention and control program, the QAPI program, the medical staff, nursing services, and pharmacy services;

(ii) Documents the evidence-based use of antibiotics in all departments and services of the hospital; and

(iii) Documents any improvements, including sustained improvements, in proper antibiotic use;

(3) The antibiotic stewardship program adheres to nationally recognized guidelines, as well as best practices, for improving antibiotic use; and

(4) The antibiotic stewardship program reflects the scope and complexity of the hospital services provided.

(c) Standard: Leadership responsibilities. (1) The governing body must ensure all of the following:

(i) Systems are in place and operational for the tracking of all infection surveillance, prevention, and control, and antibiotic use activities, in order to demonstrate the implementation, success, and sustainability of such activities.

(ii) All HAIs and other infectious diseases identified by the infection prevention and control program as well as antibiotic use issues identified by the antibiotic stewardship program are addressed in collaboration with hospital QAPI leadership.

(2) The infection preventionist(s)/infection control professional(s) is responsible for:

(i) The development and implementation of hospital-wide infection surveillance, prevention, and control policies and procedures that adhere to nationally recognized guidelines.

(ii) All documentation, written or electronic, of the infection prevention and control program and its surveillance, prevention, and control activities.

(iii) Communication and collaboration with the hospital's QAPI program on infection prevention and control issues.

(iv) Competency-based training and education of hospital personnel and staff, including medical staff, and, as applicable, personnel providing contracted services in the hospital, on the practical applications of infection prevention and control guidelines, policies, and procedures.

(v) The prevention and control of HAIs, including auditing of adherence to infection prevention and control policies and procedures by hospital personnel.

(vi) Communication and collaboration with the antibiotic stewardship program.

(3) The leader(s) of the antibiotic stewardship program is responsible for:

(i) The development and implementation of a hospital-wide antibiotic stewardship program, based on nationally recognized guidelines, to monitor and improve the use of antibiotics.

(ii) All documentation, written or electronic, of antibiotic stewardship program activities.

(iii) Communication and collaboration with medical staff, nursing, and pharmacy leadership, as well as with the hospital's infection prevention and control and QAPI programs, on antibiotic use issues.

(iv) Competency-based training and education of hospital personnel and staff, including medical staff, and, as applicable, personnel providing contracted services in the hospital, on the practical applications of antibiotic stewardship guidelines, policies, and procedures.

(d) *Standard: Unified and integrated infection prevention and control and antibiotic stewardship programs for multi-hospital systems.* If a hospital is

part of a hospital system consisting of multiple separately certified hospitals using a system governing body that is legally responsible for the conduct of two or more hospitals, the system governing body can elect to have unified and integrated infection prevention and control and antibiotic stewardship programs for all of its member hospitals after determining that such a decision is in accordance with all applicable State and local laws. The system governing body is responsible and accountable for ensuring that each of its separately certified hospitals meets all of the requirements of this section. Each separately certified hospital subject to the system governing body must demonstrate that:

(1) The unified and integrated infection prevention and control and antibiotic stewardship programs are established in a manner that takes into account each member hospital's unique circumstances and any significant differences in patient populations and services offered in each hospital;

(2) The unified and integrated infection prevention and control and antibiotic stewardship programs establish and implement policies and procedures to ensure that the needs and concerns of each of its separately certified hospitals, regardless of practice or location, are given due consideration;

(3) The unified and integrated infection prevention and control and antibiotic stewardship programs have mechanisms in place to ensure that issues localized to particular hospitals are duly considered and addressed; and

(4) A qualified individual (or individuals) with expertise in infection prevention and control and in antibiotic stewardship has been designated at the hospital as responsible for communicating with the unified infection prevention and control and antibiotic stewardship programs, for implementing and maintaining the policies and procedures governing infection prevention and control and antibiotic stewardship as directed by the unified infection prevention and control and antibiotic stewardship programs, and for providing education and training on the practical applications of infection prevention and control and antibiotic stewardship to hospital staff.

■ 27. Section 482.51 is amended by revising paragraphs (b)(1)(i) and (ii) and adding paragraph (b)(1)(iii) to read as follows:

§ 482.51 Condition of participation: Surgical services.

* * * * *

(b) * * *

(1) * * *

(i) A medical history and physical examination must be completed and documented no more than 30 days before or 24 hours after admission or registration, and except as provided under paragraph (b)(1)(iii) of this section.

(ii) An updated examination of the patient, including any changes in the patient's condition, must be completed and documented within 24 hours after admission or registration when the medical history and physical examination are completed within 30 days before admission or registration, and except as provided under paragraph (b)(1)(iii) of this section.

(iii) An assessment of the patient must be completed and documented after registration (in lieu of the requirements of paragraphs (b)(1)(i) and (ii) of this section) when the patient is receiving specific outpatient surgical or procedural services and when the medical staff has chosen to develop and maintain a policy that identifies, in accordance with the requirements at § 482.22(c)(5)(v), specific patients as not requiring a comprehensive medical history and physical examination, or any update to it, prior to specific outpatient surgical or procedural services.

* * * * *

■ 28. Section 482.58 is amended by—

■ a. Revising paragraph (b)(1);

■ b. Removing paragraph (b)(4);

■ c. Redesignating paragraphs (b)(5) through (8) as paragraphs (b)(4) through (7); and

■ d. Revising newly redesignated paragraphs (b)(4), (5), and (7).

The revisions read as follows:

§ 482.58 Special requirements for hospital providers of long-term care services ("swing-beds").

* * * * *

(b) * * *

(1) Resident rights (§ 483.10(b)(7), (c)(1), (c)(2)(iii), (c)(6), (d), (e)(2) and (4), (f)(4)(ii) and (iii), (h), (g)(8) and (17), and (g)(18) introductory text of this chapter).

* * * * *

(4) Social services (§ 483.40(d) of this chapter).

(5) Discharge summary (§ 483.20(l)).

* * * * *

(7) Dental services (§ 483.55(a)(2), (3), (4), and (5) and (b) of this chapter).

■ 29. Section 482.61 is amended by revising paragraph (d) to read as follows:

§ 482.61 Condition of participation: Special medical record requirements for psychiatric hospitals.

* * * * *

(d) *Standard: Recording progress.* Progress notes must be recorded by the physicians(s), psychologists, or other licensed independent practitioner(s) responsible for the care of the patient as specified in § 482.12(c); nurse, social worker and, when appropriate, others significantly involved in active treatment modalities. The frequency of progress notes is determined by the condition of the patient but must be recorded at least weekly for the first 2 months and at least once a month thereafter and must contain recommendations for revisions in the treatment plan as indicated as well as precise assessment of the patient's progress in accordance with the original or revised treatment plan.

* * * * *

§ 482.68 [Amended]

■ 30. Section 482.68 is amended—

■ a. In the section heading by removing the phrase ''transplant centers'' and adding in its place the phrase ''transplant programs''; and

■ b. In the introductory text and in paragraph (b) by removing the phrase ''transplant center'' and adding in its place the phrase ''transplant program''.

■ 31. Section 482.70 is amended—

■ a. In the definition of ''Adverse event'' by removing the phrase ''transplant centers'' and adding in its place the phrase ''transplant programs'';

■ b. By removing the definition of ''Heart-Lung transplant center'';

■ c. By adding definitions for ''Heart-Lung transplant program'' and ''Intestine transplant program'' in alphabetical order;

■ d. By removing the definition of ''Intestine transplant center'';

■ e. By adding a definition for ''Intestine transplant program'' in alphabetical order;

■ f. By removing the definition of ''Pancreas transplant center'';

■ g. By adding a definition for ''Pancreas transplant program'' in alphabetical order;

■ h. By removing the definition of ''Transplant center''; and

■ i. By revising the definition of ''Transplant program''.

The additions and revision read as follows:

§ 482.70 Definitions.

* * * * *

Heart-Lung transplant program means a transplant program that is located in a hospital with an existing Medicare-approved heart transplant program and an existing Medicare-approved lung program that performs combined heart-lung transplants.

Intestine transplant program means a Medicare-approved liver transplant program that performs intestine transplants, combined liver-intestine transplants, or multivisceral transplants.

* * * * *

Pancreas transplant program means a Medicare-approved kidney transplant program that performs pancreas transplants alone or subsequent to a kidney transplant as well as kidney-pancreas transplants.

* * * * *

Transplant program means an organ-specific transplant program within a transplant hospital (as defined in this section).

§§ 482.72, 482.74, 482.78, and 482.80 [Amended]

■ 32. In the following table, for each section and paragraph indicated in the first two columns, remove the phrase indicated in the third column each time it appears and add the reference indicated in the fourth column:

Section	Paragraphs	Remove	Add
§ 482.72		transplant center	transplant program.
§ 482.74	(a) introductory text	transplant center	transplant program.
§ 482.74	(a) introductory text	center's	hospital's.
§ 482.74	(a)(1)	transplant center	transplant program.
§ 482.74	(a)(1)	center's	program's.
§ 482.74	(a)(2)	transplant center	transplant program.
§ 482.74	(a)(3)	transplant center	transplant program.
§ 482.74	(b) introductory text	transplant center	transplant program.
§ 482.78	Section heading	transplant centers	transplant programs.
§ 482.78	Introductory text	transplant center	transplant program.
§ 482.78	(a)	transplant center	transplant program.
§ 482.78	(b)	transplant center	transplant program.
§ 482.80	Section heading	transplant centers	transplant programs.
§ 482.80	Introductory text	transplant centers	transplant programs.
§ 482.80	(a)	transplant center	transplant program.
§ 482.80	(a)	beneficiary	recipient.
§ 482.80	(b)	transplant center	transplant program.
§ 482.80	(c) introductory text	center	program.
§ 482.80	(c)(1)	transplant center's	transplant program's.
§ 482.80	(c)(1)	center-specific report	program-specific report.
§ 482.80	(c)(1)	beneficiaries	recipients.
§ 482.80	(c)(2)	center's	program's.
§ 482.80	(d)(1)	transplant center	transplant program.
§ 482.80	(d)(1)	center	program.
§ 482.80	(d)(2)	transplant center	transplant program.
§ 482.80	(d)(2)	center	program.
§ 482.80	(d)(3)	transplant center	transplant program.
§ 482.80	(d)(3)	center	program.
§ 482.80	(d)(4)	transplant center	transplant program.
§ 482.80	(d)(4)	center	program.
§ 482.80	(d)(5)	transplant center	transplant program.

§ 482.82 [Removed]

■ 33. Section 482.82 is removed.

■ 34. The undesignated center heading preceding § 482.90 is revised to read ''Transplant Program Process Requirements''.

§§ 482.90, 482.92, 482.94, 482.96, 482.98, 482.100, and 482.102 [Amended]

■ 35. In the following table, for each section and paragraph indicated in the first two columns, remove the phrase indicated in the third column each time it appears and add the reference indicated in the fourth column:

Section	Paragraphs	Remove	Add
§ 482.90	Introductory text	transplant center	transplant program.
§ 482.90	Introductory text	center	program.
§ 482.90	(a)(1)	center's waiting list	program's waiting list.
§ 482.90	(a)(2)	transplant center	transplant program.
§ 482.90	(a)(3)	center's waiting list	program's waiting list.
§ 482.90	(a)(4)	transplant center	transplant program.
§ 482.90	(b) introductory text	Transplant centers	Transplant programs.
§ 482.92	Introductory text	donor-beneficiary	donor-recipient.
§ 482.92	Introductory text	beneficiary	recipient.
§ 482.92	Introductory text	Transplant centers	Transplant programs.
§ 482.92	Introductory text	transplant center	transplant program.
§ 482.92	(a)	transplant center	transplant program.
§ 482.92	(a)	beneficiary	recipient.
§ 482.92	(b)	center	program.
§ 482.92	(b)	beneficiary	recipient.
§ 482.92	(b)	beneficiary's	recipient's.
§ 482.94	Introductory text	Transplant centers	Transplant programs.
§ 482.94	Introductory text	transplant center	transplant programs.
§ 482.94	Introductory text	the center also	the program also.

Section	Paragraphs	Remove	Add
§ 482.94	(a) introductory text	transplant center's	transplant program's.
§ 482.94	(a)(2)	center	program.
§ 482.94	(b) introductory text	Transplant centers	Transplant programs.
§ 482.94	(b)(2)	center's	program's.
§ 482.94	(b)(3)	center's	program's.
§ 482.94	(c) introductory text	Transplant centers	Transplant programs.
§ 482.94	(c) introductory text	center's waiting list	program's waiting list.
§ 482.94	(c)(1)introductory text	center's waiting list	program's waiting list.
§ 482.94	(c)(1)introductory text	center	program.
§ 482.94	(c)(1)(i)	center's waiting list	program's waiting list.
§ 482.94	(c)(1)(ii)	center's	progam's.
§ 482.94	(c)(1)(iii)	center's	progam's.
§ 482.94	(c)(2)	transplant center	transplant program.
§ 482.94	(c)(3) introductory text	transplant centers	transplant programs.
§ 482.94	(d) introductory text	transplant center	transplant program.
§ 482.94	(d)(2)	transplant center	transplant program.
§ 482.94	(e)	Transplant centers	Transplant programs.
§ 482.96	Introductory text	Transplant centers	Transplant programs.
§ 482.96	(a)	transplant center's	transplant program's.
§ 482.96	(a)	beneficiary	recipient.
§ 482.96	(a)	transplant center	transplant program.
§ 482.96	(b) introductory text	transplant center	transplant program.
§ 482.96	(b)(2)	transplant center	transplant program.
§ 482.96	(b)(2)	transplant center's	transplant program's.
§ 482.98	Introductory text	transplant center	transplant program.
§ 482.98	Introductory text	the center	the program.
§ 482.98	(a) heading and introductory text	transplant center	transplant program.
§ 482.98	(a) introductory text	center's	program's.
§ 482.98	(a)(1)	transplant center	transplant program.
§ 482.98	(b) introductory text	transplant center	transplant program.
§ 482.98	(c) introductory text	transplant center	transplant program.
§ 482.98	(c)(2)	transplant center	transplant program.
§ 482.98	(d) introductory text	transplant center	transplant program.
§ 482.98	(d) heading	living donor advocate team	independent living donor advocate team.
§ 482.98	(d)(1)	living donor advocate	independent living donor advocate.
§ 482.98	(d)(2) introductory text	living donor advocate team	independent living donor advocate team.
§ 482.98	(d)(3) introductory text	living donor advocate team	independent living donor advocate team.
§ 482.98	(e)	transplant center	transplant program.
§ 482.98	(f)	transplant center	transplant program.
§ 482.100		transplant center	transplant program.
§ 482.102	Introductory text	transplant center	transplant program.
§ 482.102	(a) introductory text	Transplant centers	Transplant programs.
§ 482.102	(a)(8)	transplant center	transplant program.
§ 482.102	(a)(8)	beneficiary's	recipient's.
§ 482.102	(b) introductory text	Transplant centers	Transplant programs.
§ 482.102	(b)(1)	transplant center	transplant program.
§ 482.102	(b)(4)	beneficiary	recipient.
§ 482.102	(b)(6)	transplant center-specific	transplant program-specific.
§ 482.102	(b)(6)	beneficiaries	recipients.
§ 482.102	(b)(6)	center-specific outcomes	transplant-specific outcomes.
§ 482.102	(b)(9)	transplant center	transplant program.
§ 482.102	(b)(9)	beneficiary's	recipient's.
§ 482.102	(c) introductory text	Transplant centers	Transplant programs.
§ 482.102	(c) introductory text	center's	program's.
§ 482.102	(c) introductory text	center	program.
§ 482.102	(c)(1) introductory text	transplant center	transplant program.
§ 482.102	(c)(1) introductory text	center's waiting list	program's waiting list.
§ 482.102	(c)(2) introductory text	center's Medicare approval	program's Medicare approval.
§ 482.102	(c)(2)(i)	center's waiting list	program's waiting list.
§ 482.102	(c)(2)(i)	transplant center	transplant program.
§ 482.102	(c)(2)(ii)	beneficiaries	recipients.
§ 482.102	(c)(2)(ii)	center's waiting list	program's waiting list.
§ 482.102	(c)(2)(ii)	the center	the program.
§ 482.102	(c)(2)(ii)	center's termination of approval	program's termination of approval.
§ 482.102	(c)(3)	transplant center's	transplant program's.
§ 482.102	(c)(3)	the center	the program.
§ 482.102	(c)(3)	center's waiting list	program's waiting list.
§ 482.102	(c)(3)	transplant center	transplant program.

■ 36. Section 482.102 is further amended by revising paragraph (a)(5) to read as follows:

§ 482.102 Condition of participation: Patient and living donor rights.

* * * * *

(a) * * *

(5) National and transplant program-specific outcomes, from the most recent SRTR program-specific report, including (but not limited to) the transplant program's observed and expected 1-year patient and graft survival, and national 1-year patient and graft survival;

* * * * *

§ 482.104 [Amended]

■ 37. For § 482.104, in the following table, for the heading and each paragraph indicated in the first column, remove the phrase indicated in the second column each time it appears and add the reference indicated in the third column:

Paragraphs	Remove	Add
Section heading	transplant centers	transplant programs.
(a)	transplant centers	transplant programs.
(a)	transplant center	transplant program.
(b)	transplant centers	transplant programs.
(c)	transplant centers	transplant programs.

PART 483—REQUIREMENTS FOR STATES AND LONG TERM CARE FACILITIES

■ 38. The authority citation for part 483 is revised to read as follows:

Authority: 42 U.S.C. 1302, 1320a–7, 1395i, 1395hh and 1396r.

■ 39. Section 483.73 is amended by revising paragraphs (a)(4) and (d)(2) to read as follows:

§ 483.73 Emergency preparedness.

* * * * *

(a) * * *

(4) Include a process for cooperation and collaboration with local, tribal, regional, State, or Federal emergency preparedness officials' efforts to maintain an integrated response during a disaster or emergency situation.

* * * * *

(d) * * *

(2) *Testing.* The LTC facility must conduct exercises to test the emergency plan at least twice per year, including unannounced staff drills using the emergency procedures. The LTC facility must do the following:

(i) Participate in an annual full-scale exercise that is community-based; or

(A) When a community-based exercise is not accessible, conduct an annual individual, facility-based functional exercise.

(B) If the LTC facility experiences an actual natural or man-made emergency that requires activation of the emergency plan, the LTC facility is exempt from engaging its next required a full-scale community-based or individual, facility-based functional exercise following the onset of the emergency event.

(ii) Conduct an additional annual exercise that may include, but is not limited to the following:

(A) A second full-scale exercise that is community-based or an individual, facility-based functional exercise; or

(B) A mock disaster drill; or

(C) A tabletop exercise or workshop that is led by a facilitator includes a group discussion, using a narrated, clinically-relevant emergency scenario, and a set of problem statements, directed messages, or prepared questions designed to challenge an emergency plan.

(iii) Analyze the LTC facility's response to and maintain documentation of all drills, tabletop exercises, and emergency events, and revise the LTC facility's emergency plan, as needed.

* * * * *

■ 40. Section 483.475 is amended by—

■ a. Revising paragraphs (a) introductory text, (a)(4), (b) introductory text, (c) introductory text, (d) introductory text, and (d)(1)(ii);

■ b. Adding paragraph (d)(1)(v); and

■ c. Revising paragraph (d)(2).

The revisions and addition read as follows:

§ 483.475 Condition of participation: Emergency preparedness.

* * * * *

(a) *Emergency plan.* The ICF/IID must develop and maintain an emergency preparedness plan that must be reviewed, and updated at least every 2 years The plan must do all of the following:

* * * * *

(4) Include a process for cooperation and collaboration with local, tribal, regional, State, and Federal emergency preparedness officials' efforts to maintain an integrated response during a disaster or emergency situation.

(b) *Policies and procedures.* The ICF/IID must develop and implement emergency preparedness policies and procedures, based on the emergency plan set forth in paragraph (a) of this section, risk assessment at paragraph (a)(1) of this section, and the communication plan at paragraph (c) of this section. The policies and procedures must be reviewed and updated at least every 2 years. At a minimum, the policies and procedures must address the following:

* * * * *

(c) *Communication plan.* The ICF/IID must develop and maintain an emergency preparedness communication plan that complies with Federal, State, and local laws and must be reviewed and updated at least every 2 years. The communication plan must include the following:

* * * * *

(d) *Training and testing.* The ICF/IID must develop and maintain an emergency preparedness training and testing program that is based on the emergency plan set forth in paragraph (a) of this section, risk assessment at paragraph (a)(1) of this section, policies and procedures at paragraph (b) of this section, and the communication plan at paragraph (c) of this section. The training and testing program must be reviewed and updated at least every 2 years. The ICF/IID must meet the requirements for evacuation drills and training at § 483.470(i).

(1) * * *

(ii) Provide emergency preparedness training at least every 2 years.

* * * * *

(v) If the emergency preparedness policies and procedures are significantly updated, the ICF/IID must conduct training on the updated policies and procedures.

(2) *Testing.* The ICF/IID must conduct exercises to test the emergency plan at least twice per year. The ICF/IID must do the following:

(i) Participate in an annual full-scale exercise that is community-based; or

(A) When a community-based exercise is not accessible, conduct an annual individual, facility-based functional exercise; or.

(B) If the ICF/IID experiences an actual natural or man-made emergency

that requires activation of the emergency plan, the ICF/IID is exempt from engaging in its next required full-scale community-based or individual, facility-based functional exercise following the onset of the emergency event.

(ii) Conduct an additional annual exercise that may include, but is not limited to the following:

(A) A second full-scale exercise that is community-based or an individual, facility-based functional exercise; or

(B) A mock disaster drill; or

(C) A tabletop exercise or workshop that is led by a facilitator and includes a group discussion, using a narrated, clinically-relevant emergency scenario, and a set of problem statements, directed messages, or prepared questions designed to challenge an emergency plan.

(iii) Analyze the ICF/IID's response to and maintain documentation of all drills, tabletop exercises, and emergency events, and revise the ICF/IID's emergency plan, as needed

* * * * *

PART 484—HOME HEALTH SERVICES

■ 41. The authority citation for part 484 continues to read as follows:

Authority: 42 U.S.C. 1302 and 1395hh unless otherwise indicated.

■ 42. Section 484.2 is amended by adding definitions for ''Pseudo-patient'' and ''Simulation'' in alphabetical order to read as follows:

§ 484.2 Definitions.

* * * * *

Pseudo-patient means a person trained to participate in a role-play situation, or a computer-based mannequin device. A pseudo-patient must be capable of responding to and interacting with the home health aide trainee, and must demonstrate the general characteristics of the primary patient population served by the HHA in key areas such as age, frailty, functional status, and cognitive status.

* * * * *

Simulation means a training and assessment technique that mimics the reality of the homecare environment, including environmental distractions and constraints that evoke or replicate substantial aspects of the real world in a fully interactive fashion, in order to teach and assess proficiency in performing skills, and to promote decision making and critical thinking.

* * * * *

■ 43. Section 484.50 is amended by removing and reserving paragraph (a)(3) and revising paragraph (c)(7) introductory text.

The revision reads as follows:

§ 484.50 Condition of participation: Patient rights.

* * * * *

(c) * * *

(7) Be advised, orally and in writing, of—

* * * * *

■ 44. Section 484.80 is amended by revising paragraphs (c)(1) and (h)(3) to read as follows:

§ 484.80 Condition of participation: Home health aide services.

* * * * *

(c) * * *

(1) The competency evaluation must address each of the subjects listed in paragraph (b)(3) of this section. Subject areas specified under paragraphs (b)(3)(i), (iii), (ix), (x), and (xi) of this section must be evaluated by observing an aide's performance of the task with a patient or pseudo-patient. The remaining subject areas may be evaluated through written examination, oral examination, or after observation of a home health aide with a patient, or with a pseudo-patient as part of a simulation.

* * * * *

(h) * * *

(3) If a deficiency in aide services is verified by the registered nurse or other appropriate skilled professional during an on-site visit, then the agency must conduct, and the home health aide must complete, retraining and a competency evaluation related to the deficient skill(s).

* * * * *

■ 45. Section 484.102 is amended by—

■ a. Revising paragraphs (a) introductory text, (a)(4), (b) introductory text, (c) introductory text, and (d) introductory text and the first paragraph (d)(1)(ii);

■ b. Redesignating the second paragraph (d)(1)(ii) as paragraph (d)(1)(iv);

■ c. Adding paragraph (d)(1)(v); and

■ d. Revising paragraph (d)(2).

The revisions and addition read as follows:

§ 484.102 Condition of participation: Emergency preparedness.

* * * * *

(a) *Emergency plan.* The HHA must develop and maintain an emergency preparedness plan that must be reviewed, and updated at least every 2 years. The plan must do all of the following:

* * * * *

(4) Include a process for cooperation and collaboration with local, tribal, regional, State, and Federal emergency preparedness officials' efforts to maintain an integrated response during a disaster or emergency situation.

(b) *Policies and procedures.* The HHA must develop and implement emergency preparedness policies and procedures, based on the emergency plan set forth in paragraph (a) of this section, risk assessment at paragraph (a)(1) of this section, and the communication plan at paragraph (c) of this section. The policies and procedures must be reviewed and updated at least every 2 years. At a minimum, the policies and procedures must address the following:

* * * * *

(c) *Communication plan.* The HHA must develop and maintain an emergency preparedness communication plan that complies with Federal, State, and local laws and must be reviewed and updated at least every 2 years. The communication plan must include all of the following:

* * * * *

(d) *Training and testing.* The HHA must develop and maintain an emergency preparedness training and testing program that is based on the emergency plan set forth in paragraph (a) of this section, risk assessment at paragraph (a)(1) of this section, policies and procedures at paragraph (b) of this section, and the communication plan at paragraph (c) of this section. The training and testing program must be reviewed and updated at least every 2 years.

(1) * * *

(ii) Provide emergency preparedness training at least every 2 years.

* * * * *

(v) If the emergency preparedness policies and procedures are significantly updated, the HHA must conduct training on the updated policies and procedures.

(2) *Testing.* The HHA must conduct exercises to test the emergency plan at least annually. The HHA must do the following:

(i) Participate in a full-scale exercise that is community-based; or

(A) When a community-based exercise is not accessible, conduct an annual individual, facility-based functional exercise every 2 years; or.

(B) If the HHA experiences an actual natural or man-made emergency that requires activation of the emergency plan, the HHA is exempt from engaging in its next required full-scale community-based or individual, facility-based functional exercise following the onset of the emergency event.

(ii) Conduct an additional exercise every 2 years, opposite the year the full-

scale or functional exercise under paragraph (d)(2)(i) of this section is conducted, that may include, but is not limited to the following:

(A) A second full-scale exercise that is community-based or an individual, facility-based functional exercise; or

(B) A mock disaster drill; or

(C) A tabletop exercise or workshop that is led by a facilitator and includes a group discussion, using a narrated, clinically-relevant emergency scenario, and a set of problem statements, directed messages, or prepared questions designed to challenge an emergency plan.

(iii) Analyze the HHA's response to and maintain documentation of all drills, tabletop exercises, and emergency events, and revise the HHA's emergency plan, as needed

* * * * *

PART 485—CONDITIONS OF PARTICIPATION: SPECIALIZED PROVIDERS

■ 46. The authority citation for part 485 is revised to read as follows:

Authority: 42 U.S.C. 1302 and 1395(hh).

■ 47. Section 485.66 is amended by revising the introductory text to read as follows:

§ 485.66 Condition of participation: Utilization review plan.

The facility must have in effect a written utilization review plan that is implemented annually, to assess the necessity of services and promotes the most efficient use of services provided by the facility.

* * * * *

■ 48. Section 485.68 is amended by—

■ a. Revising paragraphs (a) introductory text, (a)(4), (b) introductory text, (c) introductory text, (d) introductory text, and (d)(1)(ii);

■ b. Adding paragraph (d)(1)(v); and

■ c. Revising paragraph (d)(2).

The revisions and addition read as follows:

§ 485.68 Condition of participation: Emergency preparedness.

* * * * *

(a) *Emergency plan.* The CORF must develop and maintain an emergency preparedness plan that must be reviewed and updated at least every 2 years. The plan must do all of the following:

* * * * *

(4) Include a process for cooperation and collaboration with local, tribal, regional, State, and Federal emergency preparedness officials' efforts to maintain an integrated response during a disaster or emergency situation.

* * * * *

(b) *Policies and procedures.* The CORF must develop and implement emergency preparedness policies and procedures, based on the emergency plan set forth in paragraph (a) of this section, risk assessment at paragraph (a)(1) of this section, and the communication plan at paragraph (c) of this section. The policies and procedures must be reviewed and updated at least every 2 years. At a minimum, the policies and procedures must address the following:

* * * * *

(c) *Communication plan.* The CORF must develop and maintain an emergency preparedness communication plan that complies with Federal, State, and local laws and must be reviewed and updated at least every 2 years. The communication plan must include all of the following:

* * * * *

(d) *Training and testing.* The CORF must develop and maintain an emergency preparedness training and testing program that is based on the emergency plan set forth in paragraph (a) of this section, risk assessment at paragraph (a)(1) of this section, policies and procedures at paragraph (b) of this section, and the communication plan at paragraph (c) of this section. The training and testing program must be reviewed and updated at least every 2 years.

(1) * * *

(ii) Provide emergency preparedness training at least every 2 years.

* * * * *

(v) If the emergency preparedness policies and procedures are significantly updated, the CORF must conduct training on the updated policies and procedures.

(2) *Testing.* The CORF must conduct exercises to test the emergency plan at least annually. The CORF must do the following:

(i) Participate in a full-scale exercise that is community-based every 2 years; or

(A) When a community-based exercise is not accessible, conduct an individual, facility-based functional exercise every 2 years; or

(B) If the CORF experiences an actual natural or man-made emergency that requires activation of the emergency plan, the CORF is exempt from engaging in its next required community-based or individual, facility-based functional exercise following the onset of the emergency event.

(ii) Conduct an additional exercise every 2 years, opposite the year the full-scale or functional exercise under paragraph (d)(2)(i) of this section is conducted, that may include, but is not limited to the following:

(A) A second full-scale exercise that is community-based or an individual, facility-based functional exercise; or

(B) A mock disaster drill; or

(C) A tabletop exercise or workshop that is led by a facilitator and includes a group discussion, using a narrated, clinically-relevant emergency scenario, and a set of problem statements, directed messages, or prepared questions designed to challenge an emergency plan.

(iii) Analyze the CORF's response to and maintain documentation of all drills, tabletop exercises, and emergency events, and revise the CORF's emergency plan, as needed.

* * * * *

■ 49. Section 485.625 is amended by—

■ a. Revising paragraphs (a) introductory text, (a)(4), (b) introductory text, (c) introductory text, (d) introductory text, and (d)(1)(ii);

■ b. Adding paragraph (d)(1)(v); and

■ c. Revising paragraph (d)(2).

The revisions and addition read as follows:

§ 485.625 Condition of participation: Emergency preparedness.

* * * * *

(a) *Emergency plan.* The CAH must develop and maintain an emergency preparedness plan that must be reviewed and updated at least every 2 years. The plan must do all of the following:

* * * * *

(4) Include a process for cooperation and collaboration with local, tribal, regional, State, and Federal emergency preparedness officials' efforts to maintain an integrated response during a disaster or emergency situation.

(b) *Policies and procedures.* The CAH must develop and implement emergency preparedness policies and procedures, based on the emergency plan set forth in paragraph (a) of this section, risk assessment at paragraph (a)(1) of this section, and the communication plan at paragraph (c) of this section. The policies and procedures must be reviewed and updated at least every 2 years. At a minimum, the policies and procedures must address the following:

* * * * *

(c) *Communication plan.* The CAH must develop and maintain an emergency preparedness communication plan that complies with

Federal, State, and local laws and must be reviewed and updated at least every 2 years. The communication plan must include all of the following:

* * * * *

(d) *Training and testing.* The CAH must develop and maintain an emergency preparedness training and testing program that is based on the emergency plan set forth in paragraph (a) of this section, risk assessment at paragraph (a)(1) of this section, policies and procedures at paragraph (b) of this section, and the communication plan at paragraph (c) of this section. The training and testing program must be reviewed and updated at least every 2 years.

(1) * * *

(ii) Provide emergency preparedness training at least every 2 years.

* * * * *

(v) If the emergency preparedness policies and procedures are significantly updated, the CAH must conduct training on the updated policies and procedures.

(2) *Testing.* The CAH must conduct exercises to test the emergency plan at least twice per year. The CAH must do the following:

(i) Participate in an annual full-scale exercise that is community-based; or

(A) When a community-based exercise is not accessible, conduct an annual individual, facility-based functional exercise; or.

(B) If the CAH experiences an actual natural or man-made emergency that requires activation of the emergency plan, the CAH is exempt from engaging in its next required full-scale community-based or individual, facility-based functional exercise following the onset of the emergency event.

(ii) Conduct an annual additional exercise, that may include, but is not limited to the following:

(A) A second full-scale exercise that is community-based or an individual, facility-based functional exercise; or

(B) A mock disaster drill; or

(C) A tabletop exercise or workshop that is led by a facilitator and includes a group discussion, using a narrated, clinically-relevant emergency scenario, and a set of problem statements, directed messages, or prepared questions designed to challenge an emergency plan.

(iii) Analyze the CAH's response to and maintain documentation of all drills, tabletop exercises, and emergency events, and revise the CAH's emergency plan, as needed.

* * * * *

§ 485.627 [Amended]

■ 50. Section 485.627 is amended by removing paragraph (b)(1) and redesignating paragraphs (b)(2) and (3) as paragraphs (b)(1) and (2), respectively.

■ 51. Section 485.631 is amended by adding paragraph (d) to read as follows:

§ 485.631 Condition of participation: Staffing and staff responsibilities.

* * * * *

(d) *Standard: Periodic review of clinical privileges and performance.* The CAH requires that—

(1) The quality and appropriateness of the diagnosis and treatment furnished by nurse practitioners, clinical nurse specialist, and physician assistants at the CAH are evaluated by a member of the CAH staff who is a doctor of medicine or osteopathy or by another doctor of medicine or osteopathy under contract with the CAH.

(2) The quality and appropriateness of the diagnosis and treatment furnished by doctors of medicine or osteopathy at the CAH are evaluated by—

(i) One hospital that is a member of the network, when applicable;

(ii) One Quality Improvement Organization (QIO) or equivalent entity;

(iii) One other appropriate and qualified entity identified in the State rural health care plan;

(iv) In the case of distant-site physicians and practitioners providing telemedicine services to the CAH's patient under an agreement between the CAH and a distant-site hospital, the distant-site hospital; or

(v) In the case of distant-site physicians and practitioners providing telemedicine services to the CAH's patients under a written agreement between the CAH and a distant-site telemedicine entity, one of the entities listed in paragraphs (d)(2)(i) through (iii) of this section.

(3) The CAH staff consider the findings of the evaluation and make the necessary changes as specified in paragraphs (b) through (d) of this section.

■ 52. Section 485.635 is amended by—

■ a. Removing paragraph (a)(3)(vi);

■ b. Redesignating paragraph (a)(3)(vii) as paragraph (a)(3)(vi); and

■ c. Revising newly designated paragraph (a)(3)(vi) and paragraph (a)(4).

The revisions read as follows:

§ 485.635 Condition of participation: Provision of services.

(a) * * *

(3) * * *

(vi) Procedures that ensure that the nutritional needs of inpatients are met in accordance with recognized dietary practices. All patient diets, including therapeutic diets, must be ordered by the practitioner responsible for the care of the patients or by a qualified dietitian or qualified nutrition professional as authorized by the medical staff in accordance with State law governing dietitians and nutrition professionals and that the requirement of § 483.25(i) of this chapter is met with respect to inpatients receiving post CAH SNF care.

(4) These policies are reviewed at least biennially by the group of professional personnel required under paragraph (a)(2) of this section and updated as necessary by the CAH.

* * * * *

■ 53. Section 485.640 is added to read as follows:

§ 485.640 Condition of participation: Infection prevention and control and antibiotic stewardship programs.

The CAH must have active facility-wide programs, for the surveillance, prevention, and control of HAIs and other infectious diseases and for the optimization of antibiotic use through stewardship. The programs must demonstrate adherence to nationally recognized infection prevention and control guidelines, as well as to best practices for improving antibiotic use where applicable, and for reducing the development and transmission of HAIs and antibiotic-resistant organisms. Infection prevention and control problems and antibiotic use issues identified in the programs must be addressed in coordination with the facility-wide quality assessment and performance improvement (QAPI) program.

(a) *Standard: Infection prevention and control program organization and policies.* The CAH must demonstrate that:

(1) An individual (or individuals), who is qualified through education, training, experience, or certification in infection prevention and control, is appointed by the governing body, or responsible individual, as the infection preventionist(s)/infection control professional(s) responsible for the infection prevention and control program and that the appointment is based on the recommendations of medical staff leadership and nursing leadership;

(2) The infection prevention and control program, as documented in its policies and procedures, employs methods for preventing and controlling the transmission of infections within the CAH and between the CAH and other healthcare settings;

(3) The infection prevention and control includes surveillance,

prevention, and control of HAIs, including maintaining a clean and sanitary environment to avoid sources and transmission of infection, and that the program also addresses any infection control issues identified by public health authorities; and

(4) The infection prevention and control program reflects the scope and complexity of the CAH services provided.

(b) *Standard: Antibiotic stewardship program organization and policies.* The CAH must demonstrate that:

(1) An individual (or individuals), who is qualified through education, training, or experience in infectious diseases and/or antibiotic stewardship, is appointed by the governing body, or responsible individual, as the leader(s) of the antibiotic stewardship program and that the appointment is based on the recommendations of medical staff leadership and pharmacy leadership;

(2) The facility-wide antibiotic stewardship program:

(i) Demonstrates coordination among all components of the CAH responsible for antibiotic use and resistance, including, but not limited to, the infection prevention and control program, the QAPI program, the medical staff, nursing services, and pharmacy services;

(ii) Documents the evidence-based use of antibiotics in all departments and services of the CAH; and

(iii) Documents any improvements, including sustained improvements, in proper antibiotic use;

(3) The antibiotic stewardship program adheres to nationally recognized guidelines, as well as best practices, for improving antibiotic use; and

(4) The antibiotic stewardship program reflects the scope and complexity of the CAH services provided.

(c) *Standard: Leadership responsibilities.* (1) The governing body, or responsible individual, must ensure all of the following:

(i) Systems are in place and operational for the tracking of all infection surveillance, prevention and control, and antibiotic use activities, in order to demonstrate the implementation, success, and sustainability of such activities.

(ii) All HAIs and other infectious diseases identified by the infection prevention and control program as well as antibiotic use issues identified by the antibiotic stewardship program are addressed in collaboration with the CAH's QAPI leadership.

(2) The infection prevention and control professional(s) is responsible for:

(i) The development and implementation of facility-wide infection surveillance, prevention, and control policies and procedures that adhere to nationally recognized guidelines.

(ii) All documentation, written or electronic, of the infection prevention and control program and its surveillance, prevention, and control activities.

(iii) Communication and collaboration with the CAH's QAPI program on infection prevention and control issues.

(iv) Competency-based training and education of CAH personnel and staff, including medical staff, and, as applicable, personnel providing contracted services in the CAH, on the practical applications of infection prevention and control guidelines, policies and procedures.

(v) The prevention and control of HAIs, including auditing of adherence to infection prevention and control policies and procedures by CAH personnel.

(vi) Communication and collaboration with the antibiotic stewardship program.

(3) The leader(s) of the antibiotic stewardship program is responsible for:

(i) The development and implementation of a facility-wide antibiotic stewardship program, based on nationally recognized guidelines, to monitor and improve the use of antibiotics.

(ii) All documentation, written or electronic, of antibiotic stewardship program activities.

(iii) Communication and collaboration with medical staff, nursing, and pharmacy leadership, as well as the CAH's infection prevention and control and QAPI programs, on antibiotic use issues.

(iv) Competency-based training and education of CAH personnel and staff, including medical staff, and, as applicable, personnel providing contracted services in the CAHs, on the practical applications of antibiotic stewardship guidelines, policies, and procedures.

■ 54. Section 485.641 is revised to read as follows:

§ 485.641 Condition of participation: Quality assessment and performance improvement program.

The CAH must develop, implement, and maintain an effective, ongoing, CAH-wide, data-driven quality assessment and performance improvement (QAPI) program. The CAH must maintain and demonstrate evidence of the effectiveness of its QAPI program.

(a) *Definitions.* For the purposes of this section—

Adverse event means an untoward, undesirable, and usually unanticipated event that causes death or serious injury or the risk thereof.

Error means the failure of a planned action to be completed as intended or the use of a wrong plan to achieve an aim. Errors can include problems in practice, products, procedures, and systems; and

Medical error means an error that occurs in the delivery of healthcare services.

(b) *Standard: QAPI Program Design and scope.* The CAH's QAPI program must:

(1) Be appropriate for the complexity of the CAH's organization and services provided.

(2) Be ongoing and comprehensive.

(3) Involve all departments of the CAH and services (including those services furnished under contract or arrangement).

(4) Use objective measures to evaluate its organizational processes, functions and services.

(5) Address outcome indicators related to improved health outcomes and the prevention and reduction of medical errors, adverse events, CAH-acquired conditions, and transitions of care, including readmissions.

(c) *Standard: Governance and leadership.* The CAH's governing body or responsible individual is ultimately responsible for the CAH's QAPI program and is responsible and accountable for ensuring that the QAPI program meets the requirements of paragraph (b) of this section.

(d) *Standard: Program activities.* For each of the areas listed in paragraph (b) of this section, the CAH must:

(1) Focus on measures related to improved health outcomes that are shown to be predictive of desired patient outcomes.

(2) Use the measures to analyze and track its performance.

(3) Set priorities for performance improvement, considering either high-volume, high-risk services, or problem-prone areas.

(e) *Standard: Program data collection and analysis.* The program must incorporate quality indicator data including patient care data, and other relevant data, in order to achieve the goals of the QAPI program.

■ 55. Section 485.645 is amended by—

■ a. Revising the introductory text;

■ b. Revising paragraph (d)(1);

■ c. Removing paragraph (d)(4);
■ d. Redesignating paragraphs (d)(5) through (9) as paragraphs (d)(4) through (8), respectively; and
■ e. Revising newly redesignated paragraphs (d)(4) and (7).

The revisions read as follows:

§ 485.645 Special requirements for CAH providers of long-term care services ("swing-beds")

A CAH must meet the following requirements in order to be granted an approval from CMS to provide post-CAH SNF care, as specified in § 409.30 of this chapter, and to be paid for SNF-level services, in accordance with paragraph (c) of this section.

* * * * *

(d) * * *

(1) Resident rights (§ 483.10(b)(7), (c)(1), (c)(2)(iii), (c)(6), (d), (e)(2) and (4), (f)(4)(ii) and (iii), (g)(8) and (17), (g)(18) introductory text, and (h) of this chapter).

* * * * *

(4) Social services (§ 483.40(d) of this chapter).

* * * * *

(7) Dental services (§ 483.55(a)(2), (3), (4), and (5) and (b) of this chapter).

* * * * *

■ 56. Section 485.727 is amended by—
■ a. Revising paragraphs (a) introductory text, (a)(5), (b) introductory text, (c) introductory text, (d) introductory text, and (d)(1)(ii);
■ b. Adding paragraph (d)(1)(v); and
■ c. Revising paragraph (d)(2).

The revisions and addition read as follows:

§ 485.727 Condition of participation: Emergency preparedness.

* * * * *

(a) *Emergency plan.* The Organizations must develop and maintain an emergency preparedness plan that must be reviewed and updated at least every 2 years. The plan must do all of the following:

* * * * *

(5) Include a process for cooperation and collaboration with local, tribal, regional, State, and Federal emergency preparedness officials' efforts to maintain an integrated response during a disaster or emergency situation.

* * * * *

(b) *Policies and procedures.* The Organizations must develop and implement emergency preparedness policies and procedures, based on the emergency plan set forth in paragraph (a) of this section, risk assessment at paragraph (a)(1) of this section, and the communication plan at paragraph (c) of this section. The policies and procedures must be reviewed and updated at least every 2 years. At a minimum, the policies and procedures must address the following:

* * * * *

(c) *Communication plan.* The Organizations must develop and maintain an emergency preparedness communication plan that complies with Federal, State, and local laws and must be reviewed and updated at least every 2 years. The communication plan must include all of the following:

* * * * *

(d) *Training and testing.* The Organizations must develop and maintain an emergency preparedness training and testing program that is based on the emergency plan set forth in paragraph (a) of this section, risk assessment at paragraph (a)(1) of this section, policies and procedures at paragraph (b) of this section, and the communication plan at paragraph (c) of this section. The training and testing program must be reviewed and updated at least every 2 years.

(1) * * *

(ii) Provide emergency preparedness training at least every 2 years.

* * * * *

(v) If the emergency preparedness policies and procedures are significantly updated, the Organizations must conduct training on the updated policies and procedures.

(2) *Testing.* The Organizations must conduct exercises to test the emergency plan at least annually. The Organizations must do the following:

(i) Participate in a full-scale exercise that is community-based every 2 years; or

(A) When a community-based exercise is not accessible, an individual, facility-based functional exercise every 2 years; or.

(B) If the Organizations experience an actual natural or man-made emergency that requires activation of the emergency plan, the organization is exempt from engaging in its next required full-scale community-based or individual, facility-based functional exercise following the onset of the emergency event.

(ii) Conduct an additional exercise every 2 years, opposite the year the full-scale or functional exercise under paragraph (d)(2)(i) of this section is conducted, that may include, but is not limited to the following:

(A) A second full-scale exercise that is community-based or an individual, facility-based functional exercise; or

(B) A mock disaster drill; or

(C) A tabletop exercise or workshop that is led by a facilitator and includes a group discussion, using a narrated, clinically-relevant emergency scenario, and a set of problem statements, directed messages, or prepared questions designed to challenge an emergency plan.

(iii) Analyze the Organization's response to and maintain documentation of all drills, tabletop exercises, and emergency events, and revise their emergency plan, as needed.

* * * * *

■ 57. Section 485.914 is amended by revising paragraphs (d)(1) and (2) to read as follows:

§ 485.914 Condition of participation: Admission, initial evaluation, comprehensive assessment, and discharge or transfer of the client.

* * * * *

(d) * * *

(1) The CMHC must update each client's comprehensive assessment via the CMHC interdisciplinary treatment team, in consultation with the client's primary health care provider (if any), when changes in the client's status, responses to treatment, or goal achievement have occurred and in accordance with current standards of practice.

(2) For clients that receive PHP services, the assessment must be updated no less frequently than every 30 days.

* * * * *

■ 58. Section 485.920 is amended by revising paragraphs (a) introductory text, (a)(4), (b) introductory text, (c) introductory text, and (d) to read as follows:

§ 485.920 Condition of participation: Emergency preparedness.

* * * * *

(a) *Emergency plan.* The CMHC must develop and maintain an emergency preparedness plan that must be reviewed, and updated at least every 2 years. The plan must do all of the following:

* * * * *

(4) Include a process for cooperation and collaboration with local, tribal, regional, State, and Federal emergency preparedness officials' efforts to maintain an integrated response during a disaster or emergency situation.

(b) *Policies and procedures.* The CMHC must develop and implement emergency preparedness policies and procedures, based on the emergency plan set forth in paragraph (a) of this section, risk assessment at paragraph (a)(1) of this section, and the communication plan at paragraph (c) of this section. The policies and

procedures must be reviewed and updated at least every 2 years. At a minimum, the policies and procedures must address the following:

* * * * *

(c) *Communication plan.* The CMHC must develop and maintain an emergency preparedness communication plan that complies with Federal, State, and local laws and must be reviewed and updated at least every 2 years. The communication plan must include all of the following:

* * * * *

(d) *Training and testing.* The CMHC must develop and maintain an emergency preparedness training and testing program that is based on the emergency plan set forth in paragraph (a) of this section, risk assessment at paragraph (a)(1) of this section, policies and procedures at paragraph (b) of this section, and the communication plan at paragraph (c) of this section. The training and testing program must be reviewed and updated at least every 2 years. If the emergency preparedness policies and procedures are significantly updated, the CMHC must conduct training on the updated policies and procedures.

(1) *Training.* The CMHC must provide initial training in emergency preparedness policies and procedures to all new and existing staff, individuals providing services under arrangement, and volunteers, consistent with their expected roles, and maintain documentation of the training. The CMHC must demonstrate staff knowledge of emergency procedures. Thereafter, the CMHC must provide emergency preparedness training at least every 2 years.

(2) *Testing.* The CMHC must conduct exercises to test the emergency plan at least annually. The CMHC must:

(i) Participate in a full-scale exercise that is community-based every 2 years; or

(A) When a community-based exercise is not accessible, conduct an individual, facility-based every 2 years; or.

(B) If the CMHC experiences an actual natural or man-made emergency that requires activation of the emergency plan, the CMHC is exempt from engaging in its next required community-based or individual, facility-based functional exercise following the onset of the emergency event.

(ii) Conduct an additional exercise every 2 years, opposite the year the full-scale or functional exercise under paragraph (d)(2)(i) of this section is conducted, that may include, but is not limited to following:

(A) A second full-scale exercise that is community-based or an individual, facility-based functional exercise; or

(B) A mock disaster drill; or

(C) A tabletop exercise or workshop that is led by a facilitator and includes a group discussion, using a narrated, clinically-relevant emergency scenario, and a set of problem statements, directed messages, or prepared questions designed to challenge an emergency plan.

(iii) Analyze the CMHC's response to and maintain documentation of all drills, tabletop exercises, and emergency events, and revise the CMHC's emergency plan, as needed.

* * * * *

PART 486—CONDITIONS FOR COVERAGE OF SPECIALIZED SERVICES FURNISHED BY SUPPLIERS

■ 59. The authority citation for part 486 continues to read as follows:

Authority: 42 U.S.C. 1302, and 1395hh.

■ 60. Section 486.104 is amended by revising paragraph (a) to read as follows:

§ 486.104 Condition for coverage: Qualifications, orientation and health of technical personnel.

* * * * *

(a) *Standard: Qualifications of technologists.* All operators of the portable X-ray equipment meet the requirements of paragraph (a)(1) or (2) of this section.

(1) Successful completion of a program of formal training in X-ray technology at which the operator received appropriate training and demonstrated competence in the use of equipment and administration of portable x-ray procedures; or

(2) Successful completion of 24 full months of training and experience under the direct supervision of a physician who is certified in radiology or who possesses qualifications which are equivalent to those required for such certification.

* * * * *

■ 61. Section 486.106 is amended by revising paragraph (a)(2) to read as follows:

§ 486.106 Conditions for coverage: Referral for service and preservation of records.

* * * * *

(a) * * *

(2) Such physician or non-physician practitioner's order meets the requirements at § 410.32 of this chapter, and includes a statement concerning the condition of the patient which indicates why portable X-ray services are necessary.

* * * * *

■ 62. Section 486.360 is amended by—

■ a. Revising paragraphs (a) introductory text, (a)(4), (b) introductory text, (c) introductory text, (d) introductory text, and (d)(1)(ii);

■ b. Adding paragraph (d)(1)(v); and

■ c. Revising paragraph (d)(2)(i).

The revisions and addition read as follows:

§ 486.360 Condition for Coverage: Emergency preparedness.

* * * * *

(a) *Emergency plan.* The OPO must develop and maintain an emergency preparedness plan that must be reviewed and updated at least every 2 years. The plan must do all of the following:

* * * * *

(4) Include a process for cooperation and collaboration with local, tribal, regional, State, and Federal emergency preparedness officials' efforts to maintain an integrated response during a disaster or emergency situation.

(b) *Policies and procedures.* The OPO must develop and implement emergency preparedness policies and procedures, based on the emergency plan set forth in paragraph (a) of this section, risk assessment at paragraph (a)(1) of this section, and, the communication plan at paragraph (c) of this section. The policies and procedures must be reviewed and updated at least every 2 years. At a minimum, the policies and procedures must address the following:

* * * * *

(c) *Communication plan.* The OPO must develop and maintain an emergency preparedness communication plan that complies with Federal, State, and local laws and must be reviewed and updated at least every 2 years. The communication plan must include all of the following:

* * * * *

(d) *Training and testing.* The OPO must develop and maintain an emergency preparedness training and testing program that is based on the emergency plan set forth in paragraph (a) of this section, risk assessment at paragraph (a)(1) of this section, policies and procedures at paragraph (b) of this section, and the communication plan at paragraph (c) of this section. The training and testing program must be reviewed and updated at least every 2 years.

(1) * * *

(ii) Provide emergency preparedness training at every 2 years.

* * * * *

(v) If the emergency preparedness policies and procedures are significantly updated, the OPO must conduct training on the updated policies and procedures.

(2) * * *

(i) Conduct a paper-based, tabletop exercise or workshop at least annually. A tabletop exercise is led by a facilitator and includes a group discussion, using a narrated, clinically-relevant emergency scenario, and a set of problem statements, directed messages, or prepared questions designed to challenge an emergency plan. If the OPO experiences an actual natural or man-made emergency that requires activation of the emergency plan, the OPO is exempt from engaging in its next required testing exercise following the onset of the emergency event.

* * * * *

PART 488—SURVEY, CERTIFICATION, AND ENFORCEMENT PROCEDURES

■ 63. The authority citation for part 488 continues to read as follows:

Authority: 42 U.S.C. 1302 and 1395hh.

§ 488.30 [Amended]

■ 64. Section 488.30(a) is amended in the definition of ''Provider of services, provider, or supplier'' by removing the phrase ''transplant centers'' and adding in its place the phrase ''transplant programs''.

■ 65. Section 488.61 is amended—

■ a. By revising the section heading;

■ b. In the introductory text by removing the phrase ''transplant centers'' and adding in its place the phrase ''transplant programs'';

■ c. In paragraph (a) introductory text by removing the words ''centers'' and ''center'' each time they appear and adding in their place the words ''programs'' and ''program,'' respectively;

■ d. In paragraph (a)(2) by removing the phrase ''Scientific Registry of Transplant Beneficiary (SRTR) center-specific'' and adding in its place the phrase ''Scientific Registry of Transplant Recipient (SRTR) program-specific'';

■ e. By revising paragraph (a)(5);

■ f. By removing paragraph (c);

■ g. By redesignating paragraphs (d) through (h) as paragraphs (c) through (g), respectively;

■ h. By revising newly redesignated paragraphs (c) and (d), the newly redesignated paragraph (e) subject heading, and newly redesignated paragraphs (e)(1) introductory text, (e)(1)(iv), (e)(3), and (f)(1)(i) through (iii); and

■ i. In newly redesignated paragraph (g)(1)(x) by removing the reference ''paragraphs (h)(1)(v), (h)(1)(vi), (h)(1)(vii) or (h)(1)(viii)'' and adding in its place the reference ''paragraph (g)(1)(v), (vi), (vii) or (viii)'' .

The revisions read as follows:

§ 488.61 Special procedures for approval and re-approval of organ transplant programs.

* * * * *

(a) * * *

(5) If CMS determines that a transplant program has met the data submission, clinical experience, and outcome requirements, CMS will review the program's compliance with the conditions of participation contained at §§ 482.72 through 482.76 and §§ 482.90 through 482.104 of this chapter using the procedures described in subpart A of this part. If the transplant program is found to be in compliance with all the conditions of participation at §§ 482.72 through 482.104 of this chapter, CMS will notify the transplant program in writing of the effective date of its Medicare-approval. CMS will notify the transplant program in writing if it is not Medicare-approved.

* * * * *

(c) *Loss of Medicare approval.* Programs that have lost their Medicare approval may seek re-entry into the Medicare program at any time. A program that has lost its Medicare approval must:

(1) Request initial approval using the procedures described in paragraph (a) of this section;

(2) Be in compliance with §§ 482.72 through 482.104 of this chapter at the time of the request for Medicare approval; and

(3) Submit a report to CMS documenting any changes or corrective actions taken by the program as a result of the loss of its Medicare approval status.

(d) *Transplant program inactivity.* A transplant program may remain inactive and retain its Medicare approval for a period not to exceed 12 months. A transplant program must notify CMS upon its voluntary inactivation as required by § 482.74(a)(3) of this chapter.

(e) *Consideration of mitigating factors in initial approval survey, certification, and enforcement actions for transplant programs*—(1) *Factors.* Except for situations of immediate jeopardy or deficiencies other than failure to meet requirements at § 482.80 of this chapter, CMS will consider such mitigating factors as may be appropriate in light of the nature of the deficiency and circumstances, including (but not limited to) the following, in making a decision of initial approval of a transplant program that does not meet the data submission, clinical experience, or outcome requirements:

* * * * *

(iv) Program improvements that substantially address root causes of graft failures or patient deaths, that have been implemented and institutionalized on a sustainable basis, and that are supported by outcomes more recent than the latest available SRTR report, for which there is a sufficient post-transplant patient and graft survival period and a sufficient number of transplants such that CMS finds that the program demonstrates present-day compliance with the requirements at § 482.80(c)(2)(ii)(C) of this chapter;

* * * * *

(3) *Timing.* Within 14 calendar days after CMS has issued formal written notice of a condition-level deficiency to the program, CMS must receive notification of the program's intent to seek mitigating factors approval, and receive all information for consideration of mitigating factors within 120 calendar days of the CMS written notification for a deficiency due to data submission, clinical experience or outcomes at § 482.80 of this chapter. Failure to meet these timeframes may be the basis for denial of mitigating factors. CMS may permit an extension of the timeline for good cause, such as a declared public health emergency.

(f) * * *

(1) * * *

(i) Approve initial approval of a program's Medicare participation based upon approval of mitigating factors.

(ii) Deny the program's request for Medicare approval based on mitigating factors.

(iii) Offer a time-limited Systems Improvement Agreement, in accordance with paragraph (g) of this section, when a transplant program has waived its appeal rights, has implemented substantial program improvements that address root causes and are institutionally supported by the hospital's governing body on a sustainable basis, and has requested more time to design or implement additional improvements or demonstrate compliance with CMS outcome requirements. Upon completion of the Systems Improvement Agreement or a CMS finding that the hospital has failed to meet the terms of the Agreement, CMS makes a final determination of whether to approve or deny a program's request for Medicare

approval based on mitigating factors. A Systems Improvement Agreement follows the process specified in paragraph (g) of this section.

* * * * *

PART 491—CERTIFICATION OF CERTAIN HEALTH FACILITIES

■ 66. The authority citation for part 491 is revised to read as follows:

Authority: 42 U.S.C. 263a and 1302.

■ 67. Section 491.9 is amended by revising paragraph (b)(4) to read as follows:

§ 491.9 Provision of services.

* * * * *

(b) * * *

(4) These policies are reviewed at least biennially by the group of professional personnel required under paragraph (b)(2) of this section and reviewed as necessary by the RHC or FQHC.

* * * * *

■ 68. Section 491.11 is amended by revising paragraph (a) to read as follows:

§ 491.11 Program evaluation.

(a) The clinic or center carries out, or arranges for, a biennial evaluation of its total program.

* * * * *

■ 69. Section 491.12 is amended by—

■ a. Revising paragraphs (a) introductory text, (a)(4), (b) introductory text, (c) introductory text, (d) introductory text, and (d)(1)(ii);

■ b. Adding paragraph (d)(1)(v); and

■ c. Revising paragraph (d)(2).

The revisions and addition read as follows:

§ 491.12 Emergency preparedness.

* * * * *

(a) *Emergency plan.* The RHC or FQHC must develop and maintain an emergency preparedness plan that must be reviewed and updated at least every 2 years. The plan must do all of the following:

* * * * *

(4) Include a process for cooperation and collaboration with local, tribal, regional, State, and Federal emergency preparedness officials' efforts to maintain an integrated response during a disaster or emergency situation.

(b) *Policies and procedures.* The RHC or FQHC must develop and implement emergency preparedness policies and procedures, based on the emergency plan set forth in paragraph (a) of this section, risk assessment at paragraph (a)(1) of this section, and the communication plan at paragraph (c) of this section. The policies and procedures must be reviewed and updated at least every 2 years. At a minimum, the policies and procedures must address the following:

* * * * *

(c) *Communication plan.* The RHC or FQHC must develop and maintain an emergency preparedness communication plan that complies with Federal, State, and local laws and must be reviewed and updated at least every 2 years. The communication plan must include all of the following:

* * * * *

(d) *Training and testing.* The RHC or FQHC must develop and maintain an emergency preparedness training and testing program that is based on the emergency plan set forth in paragraph (a) of this section, risk assessment at paragraph (a)(1) of this section, policies and procedures at paragraph (b) of this section, and the communication plan at paragraph (c) of this section. The training and testing program must be reviewed and updated at least every 2 years.

(1) * * *

(ii) Provide emergency preparedness training at least every 2 years.

* * * * *

(v) If the emergency preparedness policies and procedures are significantly updated, the RHC/FQHC must conduct training on the updated policies and procedures.

(2) *Testing.* The RHC or FQHC must conduct exercises to test the emergency plan at least annually. The RHC or FQHC must do the following:

(i) Participate in a full-scale exercise that is community-based every 2 years; or

(A) When a community-based exercise is not accessible, an individual, facility-based functional exercise every 2 years; or.

(B) If the RHC or FQHC experiences an actual natural or man-made emergency that requires activation of the emergency plan, the RHC or FQHC is exempt from engaging in its next required full-scale community-based or individual, facility-based functional exercise following the onset of the emergency event.

(ii) Conduct an additional exercise every 2 years, opposite the year the full-scale or functional exercise under paragraph (d)(2)(i) of this section is conducted, that may include, but is not limited to following:

(A) A second full-scale exercise that is community-based or an individual, facility-based functional exercise; or

(B) A mock disaster drill; or

(C) A tabletop exercise or workshop that is led by a facilitator and includes a group discussion, using a narrated, clinically-relevant emergency scenario, and a set of problem statements, directed messages, or prepared questions designed to challenge an emergency plan.

(iii) Analyze the RHC or FQHC's response to and maintain documentation of all drills, tabletop exercises, and emergency events, and revise the RHC or FQHC's emergency plan, as needed.

* * * * *

PART 494—CONDITIONS FOR COVERAGE FOR END–STAGE RENAL DISEASE FACILITIES

■ 70. The authority citation for part 494 is revised to read as follows:

Authority: 42 U.S.C. l302 and l395hh.

■ 71. Section 494.60 is amended by revising paragraphs (d)(1), (2), and (4) and adding paragraphs (d)(5), (e), and (f) to read as follows:

§ 494.60 Condition: Physical environment.

* * * * *

(d) * * *

(1) Except as provided in paragraph (d)(2) of this section, dialysis facilities that do not provide one or more exits to the outside at grade level from the patient treatment area level must comply with provisions of the Life Safety Code (NFPA 101 and its Tentative Interim Amendments TIA 12–1, TIA 12–2, TIA 12–3, and TIA 12–4) applicable to Ambulatory Health Care Occupancies, regardless of the number of patients served.

(2) Notwithstanding paragraph (d)(1) of this section, dialysis facilities participating in Medicare as of October 14, 2008 that require sprinkler systems are those housed in multi-story buildings construction Types II(000), III(200), or V(000), as defined in the Life Safety Code, section 21.1.6.1, which were constructed after January 1, 2008, and those housed in high rise buildings over 75 feet in height, which were constructed after January 1, 2008.

* * * * *

(4) In consideration of a recommendation by the State survey agency or at the discretion of the Secretary, the Secretary may waive, for periods deemed appropriate, specific provisions of the Life Safety Code, which would result in unreasonable hardship upon an ESRD facility, but only if the waiver will not adversely affect the health and safety of the patients.

(5) No dialysis facility may operate in a building that is adjacent to an industrial high hazard area, as described

in sections 20.1.3.7 and 21.1.3.7 of the Health Care Facilities Code (NFPA 99 and its Tentative Interim Amendments TIA 12–2, TIA 12–3, TIA 12–4, TIA 12–5, and TIA 12–6).

(e) *Standard: Building safety.* (1) Dialysis facilities that do not provide one or more exits to the outside at grade level from the patient treatment area level must meet the applicable provisions of the Health Care Facilities Code, regardless of the number of patients served.

(2) Chapters 7, 8, 12, and 13 of the Health Care Facilities Code do not apply to a dialysis facility.

(3) If application of the Health Care Facilities Code would result in unreasonable hardship for the dialysis facility, CMS may waive specific provisions of the Health Care Facilities Code for such facility, but only if the waiver does not adversely affect the health and safety of patients.

(f) *Incorporation by reference.* The standards incorporated by reference in this section are approved for incorporation by reference by the Director of the Office of the Federal Register in accordance with 5 U.S.C. 552(a) and 1 CFR part 51. You may obtain the material from the sources listed below. You may inspect a copy at the CMS Information Resource Center, 7500 Security Boulevard, Baltimore, MD or at the National Archives and Records Administration (NARA). For information on the availability of this material at NARA, email *fedreg.legal@nara.gov,* or go to: *www.archives.gov/federal_register/cfr/ibr-locations.html.* If any changes in the editions of the Codes are incorporated by reference, CMS will publish a document in the **Federal Register** to announce the changes.

(1) National Fire Protection Association, 1 Batterymarch Park, Quincy, MA 02169, *www.nfpa.org,* 1–617–770–3000.

(i) NFPA 99, Health Care Facilities Code, 2012 edition, issued August 11 2011.

(ii) TIA 12–2 to NFPA 99, issued August 11, 2011.

(iii) TIA 12–3 to NFPA 99, issued August 9, 2012.

(iv) TIA 12–4 to NFPA 99, issued March 7, 2013.

(v) TIA 12–5 to NFPA 99, issued August 1, 2013.

(vi) TIA 12–6 to NFPA 99, issued March 3, 2014.

(vii) NFPA 101, Life Safety Code, 2012 edition, issued August 11, 2011.

(viii) TIA 12–1 to NFPA 101, issued August 11, 2011.

(ix) TIA 12–2 to NFPA 101, issued October 30, 2012.

(x) TIA 12–3 to NFPA 101, issued October 22, 2013.

(xi) TIA 12–4 to NFPA 101, issued October 22, 2013.

(2) [Reserved]

■ 72. Section 494.62 is amended by—

■ a. Revising paragraphs (a) introductory text, (a)(4), (b) introductory text, (c) introductory text, (d) introductory text, and (d)(1)(ii);

■ b. Adding paragraph (d)(1)(vii); and

■ c. Revising paragraph (d)(2).

The revisions and addition read as follows:

§ 494.62 Condition of participation: Emergency preparedness.

* * * * *

(a) *Emergency plan.* The dialysis facility must develop and maintain an emergency preparedness plan that must be evaluated and updated at least every 2 years. The plan must do all of the following:

* * * * *

(4) Include a process for cooperation and collaboration with local, tribal, regional, State, and Federal emergency preparedness officials' efforts to maintain an integrated response during a disaster or emergency situation. The dialysis facility must contact the local emergency preparedness agency at least annually to confirm that the agency is aware of the dialysis facility's needs in the event of an emergency.

(b) *Policies and procedures.* The dialysis facility must develop and implement emergency preparedness policies and procedures, based on the emergency plan set forth in paragraph (a) of this section, risk assessment at paragraph (a)(1) of this section, and the communication plan at paragraph (c) of this section. The policies and procedures must be reviewed and updated at least every 2 years. These emergencies include, but are not limited to, fire, equipment or power failures, care-related emergencies, water supply interruption, and natural disasters likely to occur in the facility's geographic area. At a minimum, the policies and procedures must address the following:

* * * * *

(c) *Communication plan.* The dialysis facility must develop and maintain an emergency preparedness communication plan that complies with Federal, State, and local laws and must be reviewed and updated at least every 2 years. The communication plan must include all of the following:

* * * * *

(d) *Training, testing, and orientation.* The dialysis facility must develop and maintain an emergency preparedness training, testing and patient orientation program that is based on the emergency plan set forth in paragraph (a) of this section, risk assessment at paragraph (a)(1) of this section, policies and procedures at paragraph (b) of this section, and the communication plan at paragraph (c) of this section. The training, testing, and patient orientation program must be evaluated and updated at least every 2 years.

(1) * * *

(ii) Provide emergency preparedness training at least every 2 years.

* * * * *

(vii) If the emergency preparedness policies and procedures are significantly updated, the dialysis facility must conduct training on the updated policies and procedures.

(2) *Testing.* The dialysis facility must conduct exercises to test the emergency plan at least annually. The dialysis facility must do all of the following:

(i) Participate in a full-scale exercise that is community-based every 2 years; or

(A) When a community-based exercise is not accessible, an individual, and a facility-based functional exercise every 2 years; or

(B) If the dialysis facility experiences an actual natural or man-made emergency that requires activation of the emergency plan, the dialysis facility is exempt from engaging in its next required full-scale community-based or individual, facility-based functional exercise following the onset of the emergency event.

(ii) Conduct an additional exercise every 2 years, opposite the year the full-scale or functional exercise under paragraph (d)(2)(i) of this section is conducted, that may include, but is not limited to the following:

(A) A second full-scale exercise that is community-based or an individual, facility-based functional exercise; or

(B) A mock disaster drill; or

(C) A tabletop exercise or workshop that is led by a facilitator and includes a group discussion, using a narrated, clinically-relevant emergency scenario, and a set of problem statements, directed messages, or prepared questions designed to challenge an emergency plan.

(iii) Analyze the dialysis facility's response to and maintain documentation of all drills, tabletop exercises, and emergency events, and revise the dialysis facility's emergency plan, as needed.

* * * * *

Dated: September 6, 2019.

Seema Verma,

Administrator, Centers for Medicare & Medicaid Services.

Dated: September 17, 2019.

Alex M. Azar II,

Secretary, Department of Health and Human Services.

[FR Doc. 2019–20736 Filed 9–25–19; 11:15 am]

BILLING CODE 4120–01–P

FEDERAL REGISTER

Vol. 84 Monday,

No. 189 September 30, 2019

Part III

Department of Health and Human Services

Centers for Medicare & Medicaid Services

42 CFR Parts 482, 484, and 485

Medicare and Medicaid Programs; Revisions to Requirements for Discharge Planning for Hospitals, Critical Access Hospitals, and Home Health Agencies, and Hospital and Critical Access Hospital Changes To Promote Innovation, Flexibility, and Improvement in Patient Care; Final Rule

DEPARTMENT OF HEALTH AND HUMAN SERVICES

Centers for Medicare & Medicaid Services

42 CFR Parts 482, 484, and 485

[CMS–3317–F and CMS–3295–F]

RIN 0938–AS59

Medicare and Medicaid Programs; Revisions to Requirements for Discharge Planning for Hospitals, Critical Access Hospitals, and Home Health Agencies, and Hospital and Critical Access Hospital Changes to Promote Innovation, Flexibility, and Improvement in Patient Care

AGENCY: Centers for Medicare & Medicaid Services (CMS), HHS.

ACTION: Final rule.

SUMMARY: This final rule empowers patients to be active participants in the discharge planning process and complements efforts around interoperability that focus on the seamless exchange of patient information between health care settings by revising the discharge planning requirements that Hospitals (including Short-Term Acute-Care Hospitals, Long-Term Care Hospitals (LTCHs), Rehabilitation Hospitals, Psychiatric Hospitals, Children's Hospitals, and Cancer Hospitals), Critical Access Hospitals (CAHs), and Home Health Agencies (HHAs) must meet in order to participate in the Medicare and Medicaid programs. This final rule also implements discharge planning requirements which will give patients and their families access to information that will help them to make informed decisions about their post-acute care, while addressing their goals of care and treatment preferences, which may ultimately reduce their chances of being re-hospitalized. It also updates one provision regarding patient rights in hospitals, intended to promote innovation and flexibility and to improve patient care.

DATES: These regulations are effective on November 29, 2019.

FOR FURTHER INFORMATION CONTACT: Alpha-Banu Wilson, (410) 786–8687, Kianna Banks, (410) 786–3498, CAPT Scott Cooper, USPHS, (410) 786–9465, Eric Laib (410) 786–9759, and Danielle Shearer, (410) 786–6617.

SUPPLEMENTARY INFORMATION:

Inspection of Public Comments: All comments received before the close of the comment period are available for viewing by the public, including any personally identifiable or confidential business information that is included in a comment. We post all comments received before the close of the comment period on the following website as soon as possible after they have been received: *http://www.regulations.gov.* Follow the search instructions on that website to view public comments.

Table of Contents

I. Background
A. Overview
B. IMPACT Act
II. Provisions of the Proposed Regulations and Responses to Public Comments
A. General Comments
B. Discharge Planning Requirements of the IMPACT Act of 2014 (Proposed § 482.43(c)(8), Proposed § 484.58(a)(6), and Proposed § 485.642(c)(8))
C. Implementation
D. Prescription Drug Monitoring Programs (PDMPs)
E. Patients' Rights and Discharge Planning in Hospitals
1. Patient's Access to Medical Records (Proposed § 482.13(d)(2))
2. Conditions of Participation (CoP)—Discharge Planning (Proposed § 482.43)
3. Design (Proposed § 482.43(a))
4. Applicability (Proposed § 482.43(b))
5. Discharge Planning Process (Proposed § 482.43(c))
6. Discharge to Home (Proposed § 482.43(d))
7. Transfer of Patients to Another Health Care Facility (Proposed § 482.43(e))
8. Requirements for Post-Acute Care (PAC) Services (Proposed § 482.43(f))
F. Home Health Agency Discharge Planning (Proposed § 484.58)
1. Discharge Planning Process (Proposed § 484.58(a))
2. Discharge or Transfer Summary Content (Proposed § 484.58(b))
G. Critical Access Hospital Discharge Planning (Proposed § 485.642)
1. Design (Proposed § 485.642(a))
2. Applicability (Proposed § 485.642(b))
3. Discharge Planning Process (Proposed § 485.642(c))
4. Discharge to Home (Proposed § 485.642(d)(1) through (3))
5. Transfer of Patients to Another Health Care Facility (Proposed § 485.642(e))
III. Provisions of the Final Regulations
IV. Collection of Information Requirements
A. ICRs Regarding Hospital Discharge Planning (§ 482.43)
B. ICRs Regarding Home Health Discharge Planning (§ 484.58)
C. ICRs Regarding Critical Access Hospital Discharge Planning (§ 485.642)
V. Regulatory Impact Analysis
A. Statement of Need
B. Overall Impact
C. Anticipated Effects
D. Alternatives Considered
E. Cost to the Federal Government
F. Accounting Statement
G. Regulatory Reform Analysis Under Executive Order 13771
H. Congressional Review Act

I. Background

A. Overview

On November 3, 2015, we published a proposed rule that would update the discharge planning requirements for hospitals, critical access hospitals (CAHs), and post-acute care (PAC) settings (80 FR 68126). Discharge planning is an important component of a successful transition from hospitals and PAC settings. The transition may be to a patient's home (with or without PAC services), skilled nursing facility (SNF), nursing facility (NF), long term care hospital (LTCH), rehabilitation hospital or unit, assisted living center, substance abuse treatment program, hospice, or a variety of other settings. While Medicare regulations define ''post-acute care'' providers to include SNFs, LTCHs, inpatient rehabilitation facilities (IRFs) and home health agencies (HHAs), it should be noted that there are other services that can be provided by entities other than PAC providers (that is, LTCHs, IRFs, HHAs, and SNFs), including assisted living facilities, home and community-based services, or primary care providers. The location to which a patient may be discharged should be based on the patient's clinical care requirements, available support network, and patient and caregiver treatment preferences and goals of care.

We also proposed to implement the discharge planning requirements of the Improving Medicare Post-Acute Care Transformation Act of 2014 (IMPACT Act) (Pub. L. 113–185), that requires hospitals, including, but not limited to, short-term acute care hospitals, CAHs and PAC providers (LTCHs, IRFs, HHAs, and SNFs), to take into account quality measures and resource use measures to assist patients and their families during the discharge planning process in order to encourage patients and their families to become active participants in the planning of their transition to the PAC or other settings (or between such settings).

We published another proposed rule on June 16, 2016 in the **Federal Register**, titled ''Medicare and Medicaid Programs; Hospital and Critical Access Hospital (CAH) Changes to Promote Innovation, Flexibility, and Improvement in Patient Care'' (81 FR 39448), hereinafter referred to as the ''Hospital Innovation proposed rule'', that proposed to update a number of Conditions of Participation (CoP) requirements that hospitals and CAHs must meet in order to participate in the Medicare and Medicaid programs. One of the proposed hospital CoP revisions in that rule directly addresses the issues

of communication between providers and patients and patient access to their medical records. We proposed that patients have the right to access their medical records, upon an oral or written request, in the form and format requested by such patients, if it is readily producible in such form and format (including in an electronic form or format when such medical records are maintained electronically); or, if not, in a readable hard copy form or such other form and format as agreed to by the facility and the patient, including current medical records, within a reasonable time frame. The hospital could not frustrate the legitimate efforts of patients to gain access to their own medical records and would have to actively seek to meet these requests as quickly as its record keeping system permitted.

In accordance with Executive Order 13813, which promotes healthcare choice and competition across the country, and in line with HHS' goals to improve interoperability between patients and their health care providers, we are finalizing certain discharge planning requirements for hospitals (including Short-Term Acute-Care Hospitals, LTCHs, Rehabilitation Hospitals, Psychiatric Hospitals, Children's Hospitals, and Cancer Hospitals), HHAs, and CAHs as well as finalizing the hospital patients' rights requirement regarding patient access to medical records. We are also finalizing the requirements of the IMPACT Act for hospitals, HHAs, and CAHs. We believe that these final requirements will empower patients to be active participants in the discharge planning process and will help them to make informed choices about their care, which may lead to more competition, lower costs, and improved quality of care. Furthermore, the IMPACT Act requirements will give patients and their families access to information that will help them to make informed decisions about their post-acute care, while addressing their goals of care and treatment preferences. Patients and their families who are well informed of their choices of high-quality PAC providers may reduce their chances of being re-hospitalized.

We also believe these final requirements will complement efforts around interoperability that focus on the seamless exchange of patient information between health care settings. Ultimately, these final requirements will ensure that a patient's health care information follows them after discharge from a hospital or PAC provider to their receiving health care facility, medical professional, or caregiver, as applicable.

B. IMPACT Act

The IMPACT Act requires the standardization of PAC assessment data that can be evaluated and compared across PAC provider settings, and used by hospitals, CAHs, and PAC providers, to facilitate coordinated care and improved Medicare beneficiary outcomes. Section 2 of the IMPACT Act added section 1899B to the Social Security Act (the Act). Section 1899B of the Act states that the Secretary of the Department of Health and Human Services (the Secretary) must require PAC providers (that is, HHAs, SNFs, IRFs, and LTCHs) to report standardized patient assessment data, data on quality measures, and data on resource use and other measures. Under section 1899B(a)(1)(B) of the Act, patient assessment data must be standardized and interoperable to allow for the exchange of data among PAC providers and other Medicare participating providers or suppliers. Section 1899B(a)(1)(C) of the Act requires the modification of existing PAC assessment instruments to allow for the submission of standardized patient assessment data to enable comparison of this assessment data across providers. The IMPACT Act requires that assessment instruments be modified to utilize the standardized data required under section 1899B(b)(1)(A) of the Act, no later than October 1, 2018 for SNFs, IRFs, and LTCHs and no later than January 1, 2019 for HHAs. The statutory timing of the IMPACT Act varies for the standardized assessment data described in subsection (b) of the Act, data on quality measures described in subsection (c) of the Act, and data on resource use and other measures described in subsection (d) of section 1899B of the Act. We note that many of these PAC provisions are being addressed in separate rulemakings. More information can be found on the CMS website at: *https://www.cms.gov/Medicare/Quality-Initiatives-Patient-Assessment-Instruments/Post-Acute-Care-Quality-Initiatives/IMPACT-Act-of-2014/IMPACT-Act-of-2014-Data-Standardization-and-Cross-Setting-Measures.html.*

Section 1899B(j) of the Act requires that we allow for stakeholder input, such as through town hall meetings, open door forums, and mailbox submissions, before the initial rulemaking process to implement section 1899B of the Act. To meet this requirement, we provided the following opportunities for stakeholder input: (1) On February 3, 2015 we convened a technical expert panel (TEP) to gather input on three cross-setting measures identified as potential measures to the requirements of the IMPACT Act, that included stakeholder experts and patient representatives; (2) provided two separate listening sessions on February 10 and March 24, 2015 on the implementation of the IMPACT Act, which also gave the public the opportunity to give CMS input on their current use of patient goals, preferences, and health assessment information in assuring high quality, person-centered and coordinated care enabling long-term, high quality outcomes; (3) in January 2015 we implemented a public mail box for the submission of comments located at *PACQualityInitiative@cms.hhs.gov.* The CMS public mailbox can be accessed on our PAC quality initiatives website: *https://www.cms.gov/Medicare/Quality-Initiatives-Patient-Assessment-Instruments/Post-Acute-Care-Quality-Initiatives/IMPACT-Act-of-2014/Submit-a-Question-or-Feedback.html;* (4) held a National Stakeholder Special Open Door Forum on February 25, 2015 to seek input on the measures; and (5) sought public input during the February 2015 ad hoc Measure Applications Partnership (MAP) process meeting regarding the measures under consideration with respect to the IMPACT Act domains. Section 1899B(i) of the Act, which addresses discharge planning, requires the modification of the CoPs, and subsequent interpretive guidance applicable to PAC providers, hospitals, and CAHs at least every 5 years, beginning no later than January 1, 2016. These regulations must require that PAC providers, hospitals, and CAHs take into account quality, resource use, and other measures under subsections (c) and (d) of section 1899B of the Act in the discharge planning process.

We proposed to implement the discharge planning requirements mandated in section 1899B(i) of the Act by modifying the discharge planning or discharge summary CoPs for hospitals, CAHs and HHAs. As stated above, the IMPACT Act added section 1899B to the Act. The IMPACT Act identifies LTCHs and IRFs as PAC providers, but the hospital CoPs also apply to LTCHs and IRFs since these facilities, along with short-term acute care hospitals (including their Inpatient Prospective Payment System (IPPS), excluded rehabilitation or psychiatric units), rehabilitation hospitals, psychiatric hospitals, children's hospitals, and cancer hospitals) are all classifications of hospitals. All classifications of hospitals (as well as distinct part

psychiatric and rehabilitation units in CAHs) are subject to most of the same core hospital CoPs. Therefore, these PAC providers (including freestanding LTCHs and IRFs) are also subject to the revisions to the hospital CoPs. We finalized the discharge planning requirements for SNFs and NFs in a final rule published on October 4, 2016 in the **Federal Register**, titled ''Medicare and Medicaid Programs; Reform of Requirements for Long-Term Care Facilities'' (81 FR 68688). The various providers' compliance with these requirements is assessed through on-site surveys by CMS, State Survey Agencies (SAs) or national accrediting organizations (AOs) that have CMS-approved Medicare accreditation programs.

II. Provisions of the Proposed Regulations and Responses to Public Comments

On November 3, 2015, we published a proposed rule in the **Federal Register**, titled ''Revisions to Requirements for Discharge Planning for Hospitals, Critical Access Hospitals, and Home Health Agencies'' (80 FR 68126), hereinafter referred to as the ''Discharge Planning proposed rule,'' that would revise the discharge planning requirements that hospitals (including, but not limited to, LTCHs and IRFs), CAHs, and HHAs must meet in order to participate in the Medicare and Medicaid programs. In addition, we proposed to implement the discharge planning requirements of the IMPACT Act. In response to the proposed rule, we received 299 public comments. Commenters included individuals, health care professionals and corporations, national associations and coalitions, state health departments, patient advocacy organizations, and individual facilities that will be impacted by the rule. Generally, most comments centered on the hospital requirements, but could be applied to all provider types included in the proposed rule. We also received various comments in response to our solicitation for comments related to specific proposals.

In response to the Hospital Innovation proposed rule, we received 200 public comments, of which a small portion were centered on the proposed patient's right to access his or her own medical information requirement. This proposed revision to the hospital Patients' Rights CoP directly addressed the issues of communication between providers and patients and patient access to their medical records. Therefore, we are finalizing a patients' right provision at 42 CFR 482.13 that we proposed in the Hospital Innovation proposed rule. The provision we are finalizing here ensures a patient's right to access his or her own medical information from a hospital. This is the only provision of that rule that we are finalizing in this final rule. We are continuing to consider comments on the remaining portion of the Hospital Innovation proposed rule, and we will respond to those comments when we finalize that rule in future rulemaking.

In this final rule, we provide a summary of our proposed provisions, a summary of the public comments received and our responses to them, and the policies we are finalizing for hospitals, HHAs, and CAHs. We have organized our proposed provisions and responses to the comments as follows: General comments; Discharge Planning Requirements of the IMPACT Act of 2014; Implementation; Prescription Drug Monitoring Programs; Patients' Rights and Discharge Planning in Hospitals; Home Health Agency Discharge Planning; and Critical Access Hospital Discharge Planning. Except for comments specific to the Hospital Innovation proposed rule, all comments discussed here were submitted in response to the Discharge Planning proposed rule. Comments related to the paperwork burden and impact analysis sections are addressed in section VI, ''Regulatory Impact Analysis'' of this final rule.

A. General Comments

We received comments suggesting improvements to our regulatory approach or requesting clarification on general issues related to our proposed discharge planning requirements. The comments and our responses to those general comments are as follows.

Comment: The majority of commenters generally supported standardizing and modernizing the discharge planning requirements for hospitals, including LTCHs and IRFs, HHAs, and CAHs. Individuals, including former patients, health care professionals, and advocacy groups strongly supported more stringent, detailed discharge planning requirements that focus on person-centered care and on the patient's treatment preferences and goals of care. Some of these commenters noted that without these requirements, some discharges from hospitals have been unsafe or inadequate and have led to readmissions or unnecessary emergency department visits shortly after discharge.

However, most commenters disagreed with certain, specific proposed discharge planning requirements. Many of these commenters stated that the requirements were too burdensome or overly prescriptive. Some of these commenters found that the proposed requirements did not go far enough to protect patients. Finally, a few commenters were against new discharge planning requirements altogether.

Response: We believe that these final discharge planning requirements for hospitals, including LTCHs, IRFs, HHAs, and CAHs will improve transitions of care, increase a patient's ability to access their health care information in a timely manner, and complement and align with efforts to improve interoperability across the care continuum. We also believe that these final requirements, which we discuss in further detail in subsequent sections of this final rule, are less burdensome than our initial proposed discharge planning requirements. In addition, we continue to believe in the importance of person-centered care during the discharge planning process. Person-centered care focuses on the patient as the locus of control, supported in making their own choices and having control over their daily lives.

These final requirements will establish and standardize discharge planning requirements for hospitals, HHAs, and CAHs. We note that effective discharge planning can also help to reduce patient readmissions, improve patient quality of care and outcomes, and reduce avoidable complications, adverse events, and readmissions.

In addition, these regulations will implement the discharge planning requirements of the IMPACT Act, which will empower patients to be active participants in the discharge planning process, which will require providers to give patients more information as they choose a PAC provider. In regards to the commenters' concerns about specific proposed requirements, we refer readers to the specific provider sections and the specific provisions throughout the preamble of this final rule for a more detailed discussion of the final requirements and responses to the comments we received on the proposed rule.

Comment: Several commenters requested clarification on whether the proposed requirements would apply to certain provider types or programs that are not mentioned in the proposed rule. A few commenters questioned whether the proposed discharge planning requirements would apply to inpatient psychiatric facilities, and one commenter asked whether the rule would apply to inpatient psychiatric units. The commenter recommended that CMS explicitly state which

provider types would be required to comply with the discharge planning CoPs. One commenter requested clarification as to whether the proposed requirements would apply to partial hospitalization and intensive outpatient programs at hospitals.

Response: All classifications of hospitals except CAHs are regulated under part 482 of our regulations, and are subject to the same set of hospital CoPs. We further clarified that the PAC providers mentioned in the IMPACT Act, specifically LTCHs and IRFs, would also be subject to the proposed revision to the hospital CoPs. We did not list all the classifications of hospitals in the proposed rule since we specifically focused on the PAC providers mentioned in the IMPACT Act, but we understand the importance of delineating which hospital types would have to comply with the hospital discharge planning CoPs, since they were not explicitly mentioned in the proposed rule. Therefore, we are clarifying that these final discharge planning requirements apply to all classifications of hospitals, including short-term acute care hospitals (including their IPPS-excluded rehabilitation or psychiatric units), psychiatric hospitals, LTCHs, rehabilitation hospitals, children's hospitals, and cancer hospitals. Throughout this final rule, we clarify that where the term ''hospital'' is used, we are referring to the aforementioned hospital classifications. These requirements would also apply to distinct part psychiatric and rehabilitation units in CAHs.

Although these discharge planning requirements apply to psychiatric hospitals, there are several additional currently existing discharge planning requirements specific to psychiatric hospitals that are not affected by the discharge planning requirements discussed in this rule. Thus, psychiatric hospitals will still be required to meet the additional special provisions, special medical record requirements, and special staff requirements set out at §§ 482.60, 482.61, and 482.62.

Inpatient psychiatric units located in a hospital, (as opposed to psychiatric hospitals) are specialized units within a larger hospital or CAH. Inpatient psychiatric units must meet the hospital CoP requirements for the hospitals in which they are located. However, they are not required to meet the CoPs specific to psychiatric hospitals set out at §§ 482.60, 482.61, and 482.62. Therefore, these discharge planning requirements apply to inpatient psychiatric units located within a hospital or a CAH. The additional, currently existing, discharge planning requirements for psychiatric hospitals do not apply to inpatient psychiatric units. Note that ''inpatient psychiatric facility'' is a CMS classification used to refer to both psychiatric hospitals and inpatient psychiatric excluded units of hospitals and inpatient psychiatric distinct part units of CAHs; however, psychiatric excluded and distinct part units in hospitals and CAHs are not subject to the requirements under §§ 482.60, 482.61, and 482.62.

In response to the commenter's request for clarification regarding partial hospitalization services and intensive outpatient services at hospitals, we note that these services can be provided in a hospital outpatient department, and partial hospitalization services can be provided in a community mental health center. These discharge planning requirements however would not apply to services provided to patients in a community health center.

Comment: Several commenters were concerned that durable medical equipment (DME) requirements were not specifically required in the discharge planning proposed rule. The commenters explained that providers should address and document a patient's DME needs during the discharge planning process. A few commenters also noted that DME was not addressed in the Meaningful Use Stage 3 requirements (80 FR 62761, which is discussed in our response here), and thus is still largely in paper format.

Response: We agree that considering a patient's DME needs when planning for a patient's post-hospital care is a best practice. While we are not mandating that providers include information on a patient's DME needs in the patient's discharge instructions at this time, we encourage providers to do so where appropriate. However, comments regarding specific Stage 3 Meaningful Use requirements are not within the purview of these CoPs.

Comment: One commenter noted the absence of proposed discharge planning requirements for SNFs in the Discharge Planning proposed rule. One commenter requested that CMS require nursing homes to provide patients with prescriptions before the patient returns home or back to the community. One commenter suggested that LTC facilities and rehabilitation facilities have a social worker with a Master of Science in Management (MSM), Licensed Clinical Social worker (LCSW), or a Master's degree in Gerontology. Another commenter recommended that each state expand the number of nursing facility/acute hospital Medicaid demonstration programs that will allow individuals with disabilities to live in the community.

Response: Comments regarding LTC facilities and Medicaid demonstration programs are outside the scope of this final rule. The discharge planning requirements for SNFs were addressed in the Long-Term Care (LTC) Facility Requirements final rule (81 FR 68688, October 4, 2016) and § 483.21(c) of the SNF requirements, which addresses discharge planning.

Comment: A few commenters recommended that if CMS finalizes the proposed requirements, the final regulation and sub-regulatory guidance should not focus on the process of discharge planning alone, but allow providers greater flexibility to ensure their efforts are meaningful and adaptable over time. One commenter believed that the proposed rule included too many details on the discharge planning process instead of focusing on outcomes, which the commenter stated, could lead to ''performing to the test'' activities that inhibit innovation. The commenter noted that the goals of the regulations should instead be focused on holding providers responsible for outcomes and not the processes of care. The commenter noted that CMS already has several programs that focus on outcomes, including value-based payment plans and hospital compare and star rating systems. The commenter ultimately believed that providers should use these mechanisms to drive innovation and lead to the best possible outcomes.

Another commenter expressed concern over the potential impact of the proposed requirements on currently existing state innovation programs aimed at adopting value-based payment. The commenter recommended that CMS review the proposed changes to the CoPs, with support for state flexibility for innovation. Finally, another commenter noted that providers would need support in implementing and understanding the finalized discharge planning requirements.

Response: We understand the commenters' concerns and have revised most of the proposed requirements in this final rule to focus less on prescriptive and burdensome process details, and more on patient outcomes and treatment preferences through the use of enhanced information exchange and innovative practice standards. We encourage hospitals, HHAs, and CAHs to actively engage with patients to create a more meaningful discharge planning process. We believe these requirements will afford patients the opportunity to

be active participants in the discharge planning process. In addition, in order to encourage patient engagement and understanding of their discharge plan or instructions, we recommend that providers follow the National Standards for Culturally and Linguistically Appropriate Services (CLAS) in Health and Health Care (*https://www.thinkculturalhealth.hhs.gov/clas/standards*), which provide guidance on providing instructions in a culturally and linguistically appropriate manner. We also remind providers of their obligations take reasonable steps to provide meaningful access to individuals with limited English proficiency in accordance with Title VI of the Civil Rights Act of 1964 and section 1557 of the Patient Protection and Affordable Care Act (the Affordable Care Act). In addition, providers are reminded to take appropriate steps to ensure effective communication with individuals with disabilities, including the provision of auxiliary aids and services, in accordance with section 504 of the Rehabilitation Act, the Americans with Disabilities Act, and section 1557 of the Affordable Care Act (see, *http://www.hhs.gov/civil-rights* and *http://www.ada.gov* for more information on these requirements).

We believe that the requirements, as revised here in this final rule, are consistent with the innovation goals of existing programs and initiatives, including the Hospital Value-Based Purchasing Program and the Center for Medicare and Medicaid Innovation's State Innovation Models Initiative.

As with all CoPs, compliance with these requirements will be monitored by CMS, SAs, and AOs through surveys. We understand the commenter's concerns about provider support in implementing and understanding the final discharge planning requirements. We will provide sub-regulatory interpretive guidance after the publication of this final rule, which will provide further clarification for implementing the final discharge planning requirements.

Comment: A few commenters requested changes to the terminology used throughout the proposed rule while others requested that CMS define certain terms used throughout the rule. One commenter requested that CMS use the term ''transition management'' instead of discharge planning.

A few commenters recommended that CMS replace the term ''patient'' with ''individual,'' ''person'' or ''affected person,'' where appropriate, in order to further emphasize the expectation that the discharge planning process should be person-centered.

A few commenters also had suggestions on the definition of ''caregiver.'' One commenter recommended that the proposed rule define the term ''caregiver.'' The commenter noted that several terms are used throughout the proposed rule, including ''caregiver,'' ''caregiver/support person,'' and ''family and/or caregiver.''

Response: We agree that there are several different types of terminology providers may utilize when referring to some of the concepts used in this rule. We do not agree with changing the terminology currently used in this rule because we are using the most widely accepted and recognized terminology in the medical industry. In addition, the terminology used throughout this rule is used in the Act, including the term ''discharge planning process'' as set forth in section 1861(ee) of the Act.

In addition, consistent with the language widely used by providers as well as the language used in the CoPs for hospitals, CAHs and HHAs, we continue the use of the term ''patient.'' As a result, we do not believe that it is appropriate to exclusively use ''person'' or ''individual.'' However, we acknowledge that the use of ''person'' or ''individual'' also appropriately refers to a patient, and we have used this terminology at various points in the rule (for example, when referring to person-centered care).

In response to the commenter that requested a definition of ''caregiver,'' we note that we often use the terms ''caregiver,'' ''caregiver/support person,'' and ''family and/or caregiver,'' interchangeably, with the same intended meaning. We use these various terms in order to be consistent with the regulations that already exist for hospitals, HHAs, and CAHs. We do not believe that it is necessary to define the term, as it does not have a special meaning in this rule.

Comment: Several comments were submitted related to the responsibilities of hospitals, HHAs, and CAHs to involve and communicate with caregivers. Commenters recommended the following:

- Require hospitals, HHAs, and CAHs to allow patients at least one opportunity to identify at least one caregiver/support person upon admission and prior to discharge or transfer to another facility, and to collect caregiver telephone contact and email address information when the provider offers the patient an opportunity to designate a caregiver.
- Clarify that providers must make reasonable attempts to contact the patient's identified caregiver during the discharge planning process.
- Require that, if the caregiver contacts the provider after the discharge planning process has begun, that individual must be involved in the discharge planning process.
- Require providers to ask what the preferred method of contact is for the caregiver.
- Require the provider to document all attempted contact with the caregiver.
- Clarify that caregivers and support persons should be involved, as applicable, but that CMS is not expecting that all patients will have caregivers and support persons and that the extent of the involvement of patients and caregivers be consistent with the patient's wishes and applicable law, including with the HIPAA Privacy Rule.
- Clarify expectations for how providers will address situations where a support person or caregiver is uncooperative, and how hospitals and CAHs should document the involvement of the caregiver and support person.
- Require that caregivers be notified in advance of the individual's discharge in order to ensure a safe and appropriate discharge back to the community.
- Provide caregivers with the name and contact information for the staff in the hospital or CAH, with whom they can discuss any concerns about the discharge plan or changes in the patient's care.
- Require providers to give the caregiver a copy of the final discharge plan, since ''informed of the final plan'' is not defined.

Response: We appreciate the commenter's concerns regarding the inclusion of the patient's caregiver during the discharge planning process. We continue to strongly believe that a patient's caregiver should be included in the discharge planning process, and have revised the regulations at § 482.43 for hospitals and § 485.642 for CAHs to allow more flexibility for hospitals and CAHs in how such inclusion is achieved. We agree that we would not expect each patient to have a caregiver or support person, and that any level of caregiver involvement would be consistent with § 164.510(b) of the HIPAA Privacy Rule as well as all other pertinent federal and state laws. We expect hospitals and CAHs to include the patient and the patient's caregiver/support person, where applicable, in the planning for a patient's post-discharge care. While it is beneficial for providers to obtain the contact information for a patient's designated caregiver, we disagree with the commenter's recommendation to mandate such a

requirement and believe that it would not be appropriate to require providers to make multiple attempts to contact caregivers during the discharge planning process. Such a requirement could prove to be burdensome to providers who are already compiling information for a discharge plan or discharge instructions and could potentially have the effect of hindering the discharge planning process. In addition, we do not believe that we should require hospitals to provide caregivers with the name and contact information for the staff at the hospital or CAH, as this may change over time. However, we note that as a best practice hospitals should give caregivers pertinent hospital contact information, so that caregiver can easily discuss concerns about the patient's discharge plan or instructions.

While we are not requiring providers to give a copy of the discharge plan to caregivers, patients can request a copy of their medical record, including the discharge plan, from the hospital, in their requested form and format, as required by newly revised § 482.13(d)(2) (as discussed below), and the hospital must comply with the patient's access request as required by the HIPAA Privacy Rule at 45 CFR 164.524. Similar requirements exist for HHAs and CAHs as well.

Comment: Several commenters submitted specific comments about the sub-regulatory interpretive guidance. Commenters recommended that CMS engage pertinent stakeholders early in an open and transparent process for developing the interpretive guidance, surveyor training, and provider education, and also implement a lean process improvement strategy.

Response: As with all regulations regarding the CoPs, the interpretive guidance will be updated once this final rule is published. The development of the interpretive guidance is a sub-regulatory process and is not required to be circulated for public comment. Comments regarding the process for developing the interpretive guidance and state survey and certification procedures are outside the scope of this final rule.

Comment: One commenter requested an extension to the 60-day comment period. Another commenter stated that the comment period was adequate.

Response: We believe that the 60-day comment period was sufficient, as evidenced by the number of comments we received. The comment period closed on January 4, 2016 for the Discharge Planning proposed rule, and on August 15, 2016 for the Hospital Innovation proposed rule.

Comment: A few commenters asked for clarification regarding provider reimbursement.

Response: Comments related to provider reimbursement are outside the scope of this final rule.

Comment: One commenter recommended that a patient's written notice of beneficiary's rights as an inpatient include a description of the patient's discharge rights. They also recommended that providers be required to provide patients with a discharge planning fact sheet. Another commenter recommended adding an additional section for hospitals, HHAs, and CAHs that would require these providers to advise patients of their rights to appeal a discharge or complain about the quality of care and advise the patient of the availability of assistance from Beneficiary and Family Centered Care Organizations. The commenters suggested referring to several CMS links regarding hospital appeals.

Response: The policies regarding a beneficiary's rights as an inpatient are outside the scope of this final rule. We continue to require providers to include patients and their caregiver/support persons in the discharge planning process. Additionally, the requirement at § 482.13(a)(2), under the Patient's Rights CoP for hospitals, requires the hospital to establish a process for prompt resolution of patient grievances and must inform each patient whom to contact to file a grievance. Outside of the CoPs, other specific CMS requirements regarding the Medicare beneficiary appeals process may apply.

Comment: We received a large number of similar comments from individuals regarding patient nutrition and food security needs. Commenters recommended that the discharge planning requirements include a nutritional component and that specific language regarding food and nutritional services during the discharge planning process be included in the regulations.

Response: While we agree that a patient's nutrition and food security needs may impact care after discharge, we do not agree that including specific language regarding food and nutritional services during the discharge planning process is necessary for all patients as a minimum discharge planning requirement. We believe that mandating such additional requirements would be burdensome. However, we encourage providers to consider and address any patient food and drug interactions, as well as the patient's nutritional needs, as part of the necessary medical information that must go along with the patient as part of the discharge plan and which we are finalizing in this rule.

Comment: A few commenters offered recommendations regarding the use of certified health IT, EHRs, and ''meaningful use'' as described in our regulations at 42 CFR 495.22, and finalized in the FY 2018 IPPS/LTCH PPS final rule (82 FR 37990, 38517). Some commenters focused on the development of a modular certification program for long-term and PAC providers, who were not eligible for meaningful use incentives under Medicare or Medicaid as authorized by the Health Information Technology for Economic and Clinical Health Act (HITECH Act). Additionally, commenters urged CMS and ONC to consider ways to encourage the adoption and use of these tools by rural and frontier providers to prevent a digital gap.

Another commenter recommended that the requirements in this rule align with current health IT certification requirements, in order to eliminate redundancy.

One commenter suggested that CMS require facilities that are electronically capturing information to do so using certified health IT.

Response: We did not propose the required use of certified health IT for health care providers under the CoPs. We also did not propose that providers use a specific form, format, or methodology for the communication of patient health care information. Therefore, these comments are out of scope of this rule. However, we strongly believe that those facilities that are electronically capturing information should be doing so using certified health IT that will enable real time electronic exchange with the receiving provider and with patients. We also believe that health IT should be interoperable and that by using certified health IT, facilities can ensure that they are transmitting interoperable data that can be used by other settings, supporting a more robust care coordination and higher quality of care for patients. Furthermore, we believe that facilities that are electronically capturing information should be exchanging that information electronically with providers who have the capacity to accept it.

CMS is firmly committed to the use of certified health IT and interoperable EHR systems for electronic healthcare information exchange to effectively help hospitals and other Medicare- and Medicaid-participating providers and suppliers improve internal care delivery practices, support the exchange of important information across care team members during transitions of care, and enable reporting of electronically

specified clinical quality measures (eCQMs). In addition, to further interoperability in post-acute care, CMS has launched the Data Element Library (DEL), which serves as a publicly available centralized, authoritative resource for standardized data elements and their associated mappings to health IT standards. The DEL furthers CMS' goal of data standardization and interoperability, which is also a goal of the IMPACT Act. These interoperable data elements can reduce provider burden by allowing the use and exchange of healthcare data, support provider exchange of electronic health information for care coordination, person-centered care, and support real-time, data driven, clinical decision making. Standards in the Data Element Library (*https://del.cms.gov/*) can be referenced on the CMS website and in the ONC Interoperability Standards Advisory (ISA). The 2019 Interoperability Standards Advisory (ISA) is available at *https://protect2.fireeye.com/url?k=44af3763-18fa3e70-44af065c-0cc47adb5650-601d6acb74373f82&u=https://www.healthit.gov/isa.*

We note that we work in conjunction with the Office of the National Coordinator for Health Information Technology (ONC), which acts as the principal federal entity charged with coordination of nationwide efforts to implement and use health information technology and the electronic exchange of health information on behalf of HHS, to promote these goals. As previously noted, ONC finalized the 2015 Edition final rule, which sets out the current criteria for health IT to be certified under the ONC Health IT Certification Program. The 2015 Edition final rule facilitates greater interoperability for several clinical health information purposes and enables health information exchange through new and enhanced certification criteria, standards, and implementation specifications. We note that CMS requires eligible hospitals and CAHs in the Medicare and Medicaid Promoting Interoperability Programs (previously known as the EHR Incentive Programs) and eligible clinicians in the Quality Payment Program (QPP) to use EHR technology certified to 2015 Edition health IT certification criteria beginning in CY 2019 (42 CFR 414.1305, 495.4, (81 FR 77538, 77555)). The 2015 Edition also defines a core set of data that health care providers have noted is critical to interoperable exchange and can be exchanged across a wide variety of other settings and use cases, known as the Common Clinical Data Set (C–CDS) (80 FR 62608 through 62702).

In an effort to continue to support seamless and secure access, exchange, and use of electronic health information, ONC published a proposed rule on March 4, 2019 in the **Federal Register**, titled ''21st Century Cures Act: Interoperability, Information Blocking, and the ONC Health IT Certification Program'' (84 FR 7424), which would implement certain provisions of the 21st Century Cures Act (the Cures Act) (Pub. L. 114–255), including conditions and maintenance of certification requirements for health information technology (health IT) developers under the ONC Health IT Certification Program (Program), the voluntary certification of health IT for use by pediatric health care providers, and reasonable and necessary activities that do not constitute information blocking.

The proposed rule would also modify the 2015 Edition health IT certification criteria and Program in additional ways to advance interoperability, enhance health IT certification, and reduce burden and costs. Specifically, the proposed rule builds on the Common Clinical Data Set with the U.S. Core Data for Interoperability (Version 1) (USCDI). The USCDI aims to support the goals set forth in the Cures Act by specifying a common set of data classes that will be required for interoperable exchange, and identifying a predictable, transparent, and collaborative process for achieving those goals (*https://www.healthit.gov/isa/us-core-data-interoperability-uscdi*).

Section 4003 of the Cures Act, enacted in 2016, and amending section 3001 of the Public Health Service Act (42 U.S.C. 300jj–11(c)), requires HHS to take steps to advance the electronic exchange of health information and interoperability for participating providers and suppliers in various settings across the care continuum. Specifically, Congress directed that ONC ''. . . for the purpose of ensuring full network-to-network exchange of health information, convene public-private and public-public partnerships to build consensus and develop or support a trusted exchange framework, including a common agreement among health information networks nationally.'' A trusted exchange framework can allow for the secure exchange of electronic health information with, and use of electronic health information from other health IT without special effort on the part of the user. Trusted exchange networks allow for broader interoperability beyond one health system or point to point connections among payers, patients, and providers. Such networks establish rules of the road for interoperability, and with maturing technology, such networks are scaling interoperability and gathering momentum with participants, including several federal agencies, EHR vendors, retail pharmacy chains, large provider associations, and others.

In light of the widespread adoption of EHRs, along with the increasing availability of health information exchange infrastructure predominantly among hospitals, we solicited public comments on how we could use the CMS health and safety standards that are required for providers and suppliers participating in the Medicare and Medicaid programs (that is, the CoPs, the CfCs, and the requirements for Long Term Care (LTC) Facilities) to further advance electronic exchange of information that supports safe, effective transitions of care between hospitals and community providers in the Request for Information published in our payment rules in 2018 in the **Federal Register**, titled ''Request for Information on Promoting Interoperability and Electronic Healthcare Information Exchange through Possible Revisions to the CMS Patient Health and Safety Requirements for Hospitals and Other Medicare- and Medicaid-Participating Providers and Suppliers''. Specifically, we noted that CMS will consider revisions to the current CMS CoPs for hospitals such as: Requiring that hospitals transferring medically necessary information to another facility upon a patient transfer or discharge do so electronically; requiring that hospitals electronically send required discharge information to a community provider via electronic means, if possible and if a community provider can be identified; and requiring that hospitals make certain information available to patients or a specified third-party application (for example, required discharge instructions) via electronic means if requested.

To fully understand all of these health IT interoperability issues, initiatives, and innovations through the lens of its regulatory authority, we invited members of the public to submit their ideas on how best to accomplish the goal of fully interoperable health IT and EHR systems for Medicare- and Medicaid-participating providers and suppliers, as well as how best to further contribute to and advance the MyHealthEData initiative for patients. We were particularly interested in identifying fundamental barriers to interoperability and health information exchange, including those specific barriers that prevent patients from being

able to access and control their medical records. We also welcomed the public's ideas and innovative thoughts on addressing these barriers and ultimately removing or reducing them in an effective way, and how revisions to the current CMS CoPs, CfCs, and RfPs for hospitals and other participating providers and suppliers could play a role in addressing these barriers. We refer readers to the specific Request for Information sections in the following 2019 payment rules:

- FY 2019 Inpatient Prospective Payment System/Long Term Care Hospital Prospective Payment System Proposed Rule (83 FR 20550 through 20553);
- FY 2019 Inpatient Rehabilitation Facility Prospective Payment System Proposed Rule (83 FR 21004 through 21007);
- FY 2019 Hospice Wage Index and Payment Rate Update and Hospice Quality Reporting Requirements Proposed Rule (83 FR 20963 through 20966);
- FY 2019 Inpatient Psychiatric Facilities Prospective Payment System and Quality Reporting Updates Proposed Rule (83 FR 21135 through 21138);
- FY 2019 Prospective Payment System and Consolidated Billing for Skilled Nursing Facilities (SNF) Proposed Rule (83 FR 21089 through 21092);
- CY 2019 Home Health Proposed Rule (83 FR 32471 through 32473);
- CY 2019 End-Stage Renal Disease Prospective Payment System Proposed Rule (83 FR 34391 through 34394);
- CY 2019 Physician Fee Schedule Proposed Rule (83 FR 36006 through 36009); and
- CY 2019 Outpatient Prospective Payment System/Ambulatory Surgical Center Proposed Rule (83 FR 37209 through 37211).

We note that the comments we received on this Request for Information will be reviewed for informational purposes as we consider new or revised CoPs/CfCs/requirements for interoperability and electronic exchange of health information in future rulemaking.

Additionally, CMS published a proposed rule, which, if finalized as proposed, would improve interoperability and outline opportunities to make patient data more useful and transferable through open, secure, standardized, and machine-readable formats while reducing restrictive burdens on healthcare providers (84 FR 7610). Specifically, the proposed rule would revise the CoPs by requiring a hospital, psychiatric hospital, or CAH, which utilizes an EHR system with the capacity to generate information for patient event notifications (based on admission, discharge, and transfer (ADT) messages,) to demonstrate that its system's notification capacity is fully operational, is operating in accordance with all state and federal statutes and regulations regarding the exchange of patient health information, and utilizes a specified content exchange standard. Such patient event notifications would be required to include defined minimum patient health information, which were proposed to include the minimum patient health information (which must be patient name, treating practitioner name, sending institution name, and, if not prohibited by other applicable law, patient diagnosis). Such messaging could be done directly, or through an intermediary that facilitates exchange of health information, and would occur at the time of admission and immediately prior to or at the time of discharge or transfer. And, in recognition of factors outside of a facility's control that may determine whether or not a notification can be successfully transmitted, an applicable hospital (as well as an applicable psychiatric hospital or CAH) would only be required to send ADT messages to licensed and qualified practitioners, other patient care team members and PAC services providers and suppliers (1) that receive the notification for treatment, care coordination, or quality improvement purposes; (2) that have an established care relationship with the patient relevant to his or her care; and (3) for whom the hospital (or psychiatric hospital or CAH) has a reasonable certainty of receipt of notifications.

Comment: One commenter stated that we should develop consistent standards of communication, information sharing, and discharge planning across the entire acute and post-acute care continuum. The commenter states that this consistency will facilitate standardization of the information collected and definitions used to improve the process, enhance communication, and ensure everyone is working toward the same goals.

Response: We agree that standardized methods of communication can be helpful to encourage consistency regarding compliance with this requirement. With regards to EHRs, we note that as of 2015, nearly all (96 percent) of non-federal acute care hospitals reported possessing a certified EHR system. Substantial adoption of certified health IT among hospitals is an important factor in moving the health care system towards common standards for sharing data. (ONC/American Hospital Association (AHA), AHA Annual Survey Information Technology Supplement (*http://dashboard.healthit.gov/evaluations/data-briefs/non-federal-acute-care-hospital-ehr-adoption-2008-2015.php.*). We further believe that facilities, which are electronically capturing patient health care information, should be sharing that information electronically with health care providers that have the capacity to receive it to the extent they are authorized to do so.

Aside from the certification of EHR technology that was finalized in other rules, we did not propose standardized methods of communication and information sharing between different health care provider types as part of the Conditions of Participation.

Comment: A few commenters suggested adding pharmacists and occupational therapists to the discharge planning team. Another commenter suggested that we require hospitals, CAHs, and HHAs to consult with a ''conflict-free community care coordinator'' in developing the discharge plan and in identifying a list of HHAs, SNFs, IRFs, or LTCHs that are available to provide post-acute care.

Response: Our use of the broad term ''practitioner'' encompasses all practitioners, including non-physician practitioners, which may be operating within a hospital. Providers may utilize the appropriate practitioners that they believe will effectively conduct a patient's discharge planning process. For those reasons, the discharge planning CoPs do not include requirements specific to individual practitioner categories. The regulations text, as written, does not explicitly state who must provide the list of PAC providers to the patient or their representative. In addition, the regulation text does not prohibit hospitals from including any qualified personnel it chooses in this part of the discharge planning process. Typically, the list of PAC providers is given to patients or their representative by a social worker or registered nurse (who is a case manager). The hospital must identify in its discharge planning policy the qualified personnel who will be involved in the discharge planning process and must execute their discharge planning process in accordance with their policies.

We appreciate the suggestion that providers utilize a conflict-free advisor. However, we believe that provider staff are capable of complying with the requirement to assist patients and their caregivers in selecting a post-acute care provider by using and sharing data that

includes, but is not limited to HHA, SNF, IRF, or LTCH data on quality measures and data on resource use measures. The utilization of contracted entities to perform this service would be a business decision of the provider, and it is not necessary to compel such business relationships via a regulatory requirement.

Comment: One commenter recommended that the discharge planning regulations be reviewed and updated more frequently.

Response: Although we frequently assess the need to update the CoPs, section 2(a) of the IMPACT Act, adding subsection 1899B(i) to the Act, requires us to update the CoPs and subsequent interpretive guidance for hospitals, CAHs, and PAC providers periodically, but not less frequently than once every 5 years.

B. Discharge Planning Requirements of the IMPACT Act of 2014 (Proposed § 482.43(c)(8), Proposed § 484.58(a)(6), and Proposed § 485.642(c)(8))

We proposed at § 482.43(c)(8), to require that hospitals assist patients, their families, or their caregivers/support persons in selecting a PAC provider by using and sharing data that includes, but is not limited to, HHA, SNF, IRF, or LTCH data on quality measures and data on resource use measures. Furthermore, the hospital would have to ensure that the PAC data on quality measures and data on resource use measures is relevant and applicable to the patient's goals of care and treatment preferences. We would also expect the hospital to document in the medical record that the PAC data on quality measures and resource use measures were shared with the patient and used to assist the patient during the discharge planning process.

We also proposed requirements for HHAs in accordance with the requirements of the IMPACT Act. For those patients who are transferred to another HHA or who are discharged to a SNF, IRF, or LTCH, we proposed at § 484.58(a)(6) to require that the HHA assist patients and their caregivers in selecting a PAC provider by using and sharing data that includes, but is not limited to, HHA, SNF, IRF, or LTCH data on quality measures and data on resource use measures.

As required by the IMPACT Act, HHAs must take into account data on quality measures and resource use measures during the discharge planning process. We also proposed at § 484.58(a)(6) that HHAs provide data on quality measures and resource use measures to the patient and caregiver that are relevant to the patient's goals of care and treatment preferences. We received many public comments on these proposed requirements for HHAs and we refer readers to section II.C.4 of this final rule for a summary of those comments and our responses.

Finally, for CAHs, we proposed at § 485.642(c)(8) to require that CAHs assist patients, their families, or their caregiver's/support persons in selecting a PAC provider by using and sharing data that includes, but is not limited to, HHA, SNF, IRF, or LTCH, data on quality measures and data on resource use measures. We would expect that the CAH would be available to discuss and answer patients and their caregiver's questions about their post-discharge options and needs. We would also expect the CAH to document in the medical record that the PAC data on quality measures and resource use measures were shared with the patient and used to assist the patient during the discharge planning process.

Furthermore, the CAH would have to ensure that the PAC data on quality measures and data on resource use measures is relevant and applicable to the patient's goals of care and treatment preferences. As required by the IMPACT Act, CAHs would be required to take into account data on quality measures and data on resource use measures during the discharge planning process. In order to increase patient involvement in the discharge planning process and to emphasize patient preferences throughout the patient's course of treatment, we expect that CAHs tailor the data on PAC provider quality measures and resource use measures to the patient's goals of care and treatment preferences. For example, the CAH could provide the aforementioned quality data on PAC providers that are within the patient's desired geographic area. CAHs could also provide quality data on HHAs based on the patient's preference to continue their care upon discharge to home. CAHs should assist patients as they choose a high quality PAC provider. However, we would expect that CAHs would not make decisions on PAC services on behalf of patients and their families and caregivers and instead focus on person-centered care to increase patient participation in post-discharge care decision making.

Comment: While many commenters supported the IMPACT Act's goals to standardize data amongst PAC providers, most commenters requested clarification on the specifics of the proposed IMPACT Act discharge planning requirements for hospitals, HHAs, and CAHs. Most commenters asked CMS to clarify what data sources hospitals would be expected to use and where these data sources would be available. One commenter recommended that hospitals not assist patients in selecting a PAC provider or making decisions about the patient's post-acute needs, and instead require that access to these data be made available to patients and their families. A few commenters questioned the use of the Nursing Home Compare and Home Health Compare websites. These commenters were concerned that patients may receive inaccurate or outdated information. One of these commenters recommended that CMS provide a publicly available database of certified providers. One commenter stated that CMS's ''Compare'' websites can be confusing for patients and would likely require case management professionals to filter and interpret the data. The commenter further stated that additional studies would need to be conducted on how to disseminate this data in a manner that is easily understood and meets CLAS standards. The commenter therefore recommended that CMS provide standard, publicly-available data visualization and interpretation standards or guides. Additionally, another commenter recommended that CMS develop a patient resource to assist with the interpretation of the quality and resource use data. Another commenter noted that while quality data is available through the Nursing Home and Home Health Compares, similar websites do not exist for other PAC providers, such as IRFs.

Several commenters questioned whether relevant hospital practitioners were qualified to interpret, discuss, and answer questions about the quality and resource use data. A few commenters recommended that CMS give providers more information and guidelines on how to discuss PAC data on quality measures and data on resource use measures with patients. In particular, the commenters stated that CMS should provide concise, consumer-friendly information on each measure and how to evaluate the performance of a specific measure to determine whether a certain provider is appropriate for a patient. Another commenter asked that the final rule acknowledge that it may not be feasible for a hospital to provide complex quality data for each PAC facility that is being considered with the expectation that the hospital explain all of the nuances that account for different ratings.

Response: Section 1899B(i) of the Act requires that PAC providers, hospitals and CAHs take into account quality, resource use, and other measures in the

discharge planning process. We understand that commenters had concerns about using appropriate data that would be comparable to the data that would be gathered and provided in accordance with the requirements of the IMPACT Act. However we note that since the publication of the proposed rule in 2015, the measures we implemented into the PAC Quality Reporting Program (QRPs) for the domains of functional status, skin integrity, the incidence of major falls, and the resource use and other measures as required by the Act are now publicly available on the IRF, SNF, LTCH, and Home Health (HH) Compare websites. Data from these measures are now being reported to providers by means of private provider feedback reports. Other data as required by the IMPACT Act will be publicly available in the near future. We therefore expect providers to make reasonable efforts to use the quality and resource use measure data that are currently available to them until all of the measures stipulated in the IMPACT Act are finalized and publicly reported. Additional explanations, resources, instructions, and help on how to use the IRF Compare, HH Compare, Nursing Home Compare, and Long-Term Care Hospital Compare websites are currently available on the following pertinent websites:

- *https://www.medicare.gov/inpatientrehabilitationfacilitycompare/.*
- *https://www.medicare.gov/homehealthcompare/search.html.*
- *https://www.medicare.gov/nursinghomecompare/search.html.*
- *https://www.medicare.gov/longtermcarehospitalcompare/.*

While the data from these sources are not available in ''real time,'' the data are posted as soon as feasible. Providers should use these data sources to assist patients as they choose a PAC provider that aligns with the patient's goals of care and treatment preferences, and we would also expect providers to document all efforts regarding this requirement in the patient's medical record.

We believe that providers have the ability and knowledge to interpret and discuss the publicly available data on quality and resource use measures at the most basic levels. We note that we do not expect providers to give overly detailed and complex analyses of the quality and resource use data, which may only serve to confuse patients and/or their caregivers, nor do we expect providers to attempt to provide patients and their caregivers with data that do not exist regarding PAC facilities. We expect providers to put forth their best effort to answer patient questions regarding the data. We also encourage providers to refer to *www.medicare.gov* for additional resources and help. Further information regarding specific measures mandated by the IMPACT Act will be available in forthcoming regulations. Finally, we also encourage providers to consult the sub-regulatory interpretive guidance that will be available after publication of the final rule.

Comment: Several commenters asked for clarification on what additional information can be provided to patients about PAC providers. A few commenters gave examples of marketing materials, other information the provider may have regarding a PAC's quality and resource use, whether the patient's health insurance covers the patient's specific PAC provider choice, and information regarding out of pocket cost for PAC providers.

Response: Providers can use additional available information to assist patients as they select a PAC provider, so long as the information presented aligns with the patient's goals of care and treatment preferences. The IMPACT Act in no way limits providers' ability to augment the information provided to patients. All attempts to assist patients should be documented in the medical record.

Furthermore, these discharge planning requirements do not prohibit providers from giving patients information regarding coverage of a selected PAC by the patient's insurance or specifics on out of pocket costs for PAC providers. Providers may give this information to patients if they choose. However, we do not expect providers to have definitive knowledge of the terms of a patient's insurance coverage or eligibility for post-acute care, or for Medicaid coverage, but we encourage providers to be generally aware of the patient's insurance status. We do not believe that it is appropriate to mandate such a requirement here, as these CoPs provide basic requirements for the discharge planning process.

Comment: Several commenters asked for clarification on how providers can assist patients in choosing a PAC provider without improperly steering the patient to certain providers. Some commenters expressed concern that the proposed requirements may lead to hospital steering, with some commenters expressing concern that certain hospitals may employ tactics to purposely channel patients to other providers or suppliers within their medical system or under common ownership. A few commenters questioned whether patient choice would be influenced by the patient receiving services or care from a Medicare fee-for-service provider who may be participating in an alternative payment model, such as bundled payment programs, shared savings programs, or full clinical and financial risk payment programs.

Commenters expressed their belief that CMS should allow providers to identify the best PAC providers that lead to improved efficiency and better outcomes, so long as patients are given the ultimate choice of PAC provider and all financial dealings and conflicts of interest are disclosed to the patient during the discharge planning process.

Response: We understand the commenter's concerns regarding patient steering. However, we believe compliance with the revised CoP and the fraud and abuse laws, including the physician self-referral law and Federal anti-kickback statute, is achievable. We believe that hospitals, HHAs and CAHs will be in compliance with this requirement if they present objective data on quality and resource use measures specifically applicable to the patient's goals of care and treatment preferences, taking care to include data on all available PAC providers, and allowing patients and/or their caregivers the freedom to select a PAC provider of their choice. Providers will have to document all such interactions in the medical record. In addition, we expect hospitals to comply with the requirements in § 482.43(c) and inform the patient and/or the patient's representative of their freedom to choose among participating Medicare providers and suppliers of post-discharge services, while not specifying or otherwise limiting the qualified providers or suppliers that are available to the patient. Hospitals, HHAs, and CAHs that have concerns that providing objective information in these circumstances may conflict with other laws can obtain guidance on the physician self-referral law at *www.cms.gov/physicianselfreferral* and on the Federal anti-kickback statute at *www.oig.hhs.gov.* Information about obtaining advisory opinions regarding the application of the physician self-referral law in specific circumstances can be found at *https://www.cms.gov/Medicare/Fraud-and-Abuse/PhysicianSelfReferral/advisory_opinions.html* and regarding the application of the anti-kickback law at *https://oig.hhs.gov/compliance/advisory-opinions/index.asp.*

We remind providers that compliance with these requirements will be assessed through on-site surveys by CMS, state survey agencies, and AOs and that purposeful patient steering

(that is, directing patients and/or their caregivers to PAC providers that do not align with the patient's goals of care and treatment preferences) could lead to a determination of provider noncompliance with the requirements in this rule. We also note that physician self-referral violations may result in imposition of penalties set out under section 1877(g) of the Act.

Comment: One commenter questioned the guidance on resource use measures in the proposed rule with regards to dementia patients. The commenter stated that data on discharge to the community and data on preventable readmission rates for persons with dementia is limited. The commenter further stated that CMS could collect data on how many all-cause readmission beneficiaries have dementia.

Response: Providers must use and share data on quality measures and data on resource use measures that are relevant and applicable to the patient's goals of care and treatment preferences. While we believe that resource use data can be helpful to all patients, providers can tailor the specific data that are given to patients so that the data are applicable to the patient's specific medical condition or circumstance. The provider should ensure that the data given to patients aligns with the patient's ultimate goals of care and treatment preferences.

The comments regarding the collection of quality measures are outside the scope of this final rule. However, we do appreciate the commenter's suggestion regarding data that pertain to patients with dementia.

Comment: One commenter asked that CMS clarify the protocols that providers would be expected to follow if a patient refused to agree to be discharged to a PAC facility chosen on the basis of the supplied quality data and/or family preferences, especially when no other safe options existed in the area.

Response: We expect hospitals, HHAs, and CAHs to document the patient's refusal in the medical records and continue to make reasonable efforts to work with the patient and/or the patient's caregiver to find appropriate substitutions. However, we note that Medicare and Medicaid participating facilities are surveyed regularly to assure quality, and we believe that Medicare facilities in good standing can be trusted to provide services safely.

Final Decision: After consideration of the comments we received on the Discharge Planning proposed rule, we are finalizing and redesignating the proposed requirements at §§ 482.43(c)(8) and 485.642(c)(8) as §§ 482.43(a)(8) and 485.642(a)(8), respectively, without modification. We are finalizing and redesignating the requirements in proposed § 484.58(a)(6) as § 484.58(a), without modification.

C. Implementation

We solicited comments on the timeline for implementation of the discharge planning requirements for HHAs and CAHs. We received many comments in response to this solicitation for comments and recommendations on the effective date and the date of implementation of the discharge planning requirements in hospitals.

Comment: Many commenters recommended a delay in the implementation or the effective date of the final discharge planning requirements for all providers. Most of these commenters noted that the proposed discharge planning requirements were extensive and that hospitals, HHAs, and CAHs would need additional time to understand and fully implement all the requirements, train staff, and update EHR systems to reflect the final discharge planning requirements. Recommendations for implementation timeframes or delays in the effective date included:

- 1 to 5 years, with several commenters specifically recommending a 1-year delay;
- Piloting discharge planning requirements before finalizing them;
- Phasing in the requirements; and
- A 2-year delay with implementation to begin with inpatients that hospitals determine are most at risk for readmission.

Many commenters were particularly concerned about the effective date for certain specific proposed requirements. Most suggested delaying the effective date for the discharge planning requirements of the IMPACT Act until quality reporting data is publicly available.

Response: We continue to believe that most hospitals and CAHs have discharge planning processes in place and that these providers will be well prepared to implement the final discharge planning requirements. In addition, we are either revising or not finalizing most of our proposed discharge planning requirements, such as the design, applicability, and timeframe requirements for hospitals and CAHs, which will reduce additional burden. Therefore, we do not believe an additional delay in the effective date for hospitals and CAHs is necessary. In light of the significant streamlining of the final discharge planning requirements for HHAs, we do not believe an additional delay in the effective date for implementation of the final discharge planning requirements for HHAs, including the Impact Act requirements at § 484.58(a) are necessary. We also believe the discharge planning requirements in this final rule are beneficial to patients and their caregivers (where applicable) and will reduce patient readmission risks and improve patient care. We refer readers to the provider-specific sections II.C through II.E of this final rule, for a summary of the public comments we received, our responses to the comments, and the final requirements and to section II.B of this final rule for a discussion of the discharge planning requirements of the IMPACT Act and the measures that are currently publicly available.

Final Decision: After consideration of the comments received, we are requiring implementation of the final requirements for HHAs 60 days after date of publication of this final rule, including the IMPACT Act requirements at § 484.58(a). Hospitals and CAHs will be required to comply with all of the final requirements 60 days after date of publication of this final rule.

D. Prescription Drug Monitoring Programs (PDMPs)

In the Discharge Planning proposed rule, we encouraged providers to consider using their state's Prescription Drug Monitoring Program (PDMP) during the evaluation of a patient's relevant co-morbidities and past medical and surgical history (80 FR 68132). Given the potential benefits of PDMPs as well as some of the challenges noted in the proposed rule, we solicited comments on whether providers should be required to consult with their state's PDMP and review a patient's risk of non-medical use of controlled substances and substance use disorders as indicated by the PDMP report. We also solicited comments on the use of PDMPs in the medication reconciliation process.

Comment: We received a large number of comments in response to our solicitation for comments on the use of PDMPs during the discharge planning process. A majority of commenters strongly disagreed with establishing a requirement for providers to consult with their state's PDMP, with most stating that such a requirement would be burdensome and time consuming for providers and their prescribing practitioners during the discharge planning process. A few commenters expressed specific concerns about the burden of such a requirement on CAH providers. One commenter expressed

concern about the applicability of this requirement to pediatric patients and recommended that this requirement be optional for pediatric patients under the age of 12. Many commenters agreed that PDMPs could potentially be useful, if the many challenges that currently exist within the PDMP systems are resolved. In addition, some commenters stated that PDMPs could work if there were a national or standardized PMDP database. In addition, one commenter requested clarification on how CMS expects providers to use PDMPs.

Several commenters agreed that many PDMPs still encounter legal, policy, and technical challenges. Many of these commenters raised issues of interoperability and noted that access to PDMPs varies widely by state and that data contained within their individual state's PDMP is often incomplete or out of date or provides limited access or access that is slow. Some commenters explained that there are additional challenges for providers whose patients cross multiple state lines, since PDMPs vary by state. One commenter questioned whether these hospitals would be required to check all state databases that are in their surrounding area.

Some commenters noted that their state did not have a PDMP. Other commenters noted that the proposed requirement would conflict with some state laws and requirements. These commenters indicated that state PDMP statutes were not enacted to assist discharge planning. A few commenters recommended deferring to the local state requirements while others specified the importance of addressing restrictions under the HIPAA Privacy Rule at § 164.510. A few commenters gave the example of Ohio as a state with a mandatory PDMP requirement. Ohio currently requires prescribing physicians and other prescribing practitioners to check the Ohio Automated Rx Reporting System (OARRS). One commenter recommended that CMS work with state PDMP programs to facilitate proactive PDMP report generation that could be sent to hospitals at the time of patient admission.

Some commenters stated that HHAs in their state do not have access to their state's PDMP system; and that only pharmacists, prescribers, and law enforcement officials have access to the system. Other commenters noted that HHAs do not prescribe controlled substances or other types of medications.

A few commenters agreed with requiring providers to use PDMPs. Some other commenters supported CMS' continued encouragement of the use of PDMPs, but encouraged CMS not to mandate the use of PDMPs. One commenter stated that a mandatory requirement should not be instituted for providers; instead, each facility should be able to determine whether use of the PDMP is appropriate or necessary on an individual patient level. One commenter stated that PDMPs should only apply to the prescription of controlled substances until the universal use of PDMPs is better understood.

Response: We thank the commenters for their feedback. We received many comments that stated that we had proposed PDMP requirements for providers and many of these comments recommended that we not finalize, or delay finalization, of this proposal. However, we clarify that we did not propose PDMP requirements, and solely solicited comments in the proposed rule on whether provider consultations with PDMPs during the discharge planning process should be required.

Final Decision: After taking into consideration the comments received in response to our solicitation of comments for PDMPs, we agree that it would be difficult to implement a mandatory requirement for providers to access their state's PDMP during the discharge planning process at this time. We appreciate stakeholder input on this issue. We will not require that hospitals, including LTCHs and IRFs, HHAs or CAHs consult with their state's PDMP and review a patient's risk of non-medical use of controlled substances and substance use disorders as indicated by the PDMP report, nor will we require providers to use or access PDMPs during the medication reconciliation process. However, as discussed in the proposed rule, we strongly encourage practitioners to utilize strategies and tools, such as PDMPs, to the extent permissible under the HIPAA Privacy Rule and state law, to help to reduce prescription drug misuse. Furthermore, we note that there may be state laws that require practitioners to consult with their state's PDMP system and we acknowledge that since the publication of the proposed rule, additional states have adopted statewide PDMP programs. We therefore remind providers that they must continue to abide by all applicable state laws.

E. Patients' Rights and Discharge Planning in Hospitals

1. Patient's Access to Medical Records (Proposed § 482.13(d)(2))

In the Hospital Innovation proposed rule, we proposed clarifying the requirement for hospitals at § 482.13(d)(2) to state that the patient has the right to access their medical records, including current medical records, upon an oral or written request, in the form and format requested by the individual, if it is readily producible in such form and format (including in an electronic form or format when such medical records are maintained electronically); or, if not, in a readable hard copy form or such other form and format as agreed to by the facility and the individual, within a reasonable time frame (81 FR 39475). We also note that our use of terms ''patients'' and ''medical records'' instead of the HIPAA-defined terms ''individual,'' ''protected health information,'' and ''designated record set'' is not intended to suggest a different standard for covered entities subject to the HIPAA Privacy Rule. (See 45 CFR 164.524). We simply are using well-understood terms that are consistent across all of our regulations. The Office for Civil Rights recently issued Frequently asked Questions document about medical records access clarifying that the requirement to send medical records to the individual is within 30 days (or 60 days if an extension is applicable) after receiving the request, ''however, in most cases, it is expected that the use of technology will enable the covered entity to fulfill the individual's request in far fewer than 30 days.'' (See *http://www.hhs.gov/hipaa/for-professionals/privacy/guidance/access/#newly releasedfaqs.*) Individuals who have not been provided with their medical records within the 30-day timeframe required by HIPAA or who experience other difficulties accessing their medical records can file a complaint with Office for Civil Rights at: *http://www.hhs.gov/hipaa/filing-a-complaint/index.html.* We also refer the public to the following information pertaining to the Promoting Interoperability Program (formerly known as the EHR Incentive Program) and to an individual's rights under HIPAA to access their health information at the following websites: *https://www.hhs.gov/hipaa/for-professionals/faq/2051/under-the-ehr-incentive-program-participating-providers/index.html* and *https://www.hhs.gov/hipaa/for-professionals/privacy/guidance/access/index.html.*

Comment: Commenters were generally supportive of this proposal.

Some commenters suggested allowing hospitals to provide to the patient copies of their medical record in the format that the facility deems appropriate at the time of the request if the patient has not specified a format for receiving the records. One commenter recommended that the regulation specify that discharge planning documents be immediately accessible to patients and their caregivers. The commenter notes that under the current medical record requirement (most likely the commenter is referring to § 482.24), it is difficult for caregivers to obtain a medical record from a hospital until after discharge, even with the patient's signed consent.

Response: This final rule states that the patient has the right to access their medical records in the form and format they request, if it is readily producible in such form and format. The medical record must include any discharge planning documents, so it is not necessary for this requirement to specify any specific part of the medical record as requested by the commenter. Patients are free to request their entire medical record or a specific portion of it if they choose, including any discharge planning documents, as noted by the commenter. However, these documents (and, by extension, the entire medical record) would obviously not be complete until after a patient is discharged. Further, the provision goes on to state that if the records are not readily producible in the form or format requested by the patient, the hospital must provide the records in a readable hard copy form or such other form and format as agreed to by the facility and the individual. We encourage hospitals to communicate with the patient to determine in which format they would prefer to receive the records; however, if no format is requested, the hospital has the flexibility to provide the records in a readable hard copy form.

Final Decision: After consideration of the comments we received on this proposal for the Hospital Innovation proposed rule, we are finalizing § 482.13(d)(2) with two minor editorial modifications.

We are moving the phrase ''including current medical records'' to a more appropriate place in the text, that is, immediately following the opening language of the provision, ''The patient has the right to access their medical records,'' so that it now reads, ''The patient has the right to access their medical records, including current medical records . . .''

In the proposed rule, we had awkwardly and inadvertently placed the phrase further along so it stated that the patient has the right to access their medical records, upon an oral or written request, in the form and format requested by the individual, if it is readily producible in such form and format (including in an electronic form or format when such medical records are maintained electronically); or, if not, in a readable hard copy form or such other form and format as agreed to by the facility and the individual, *including current medical records,* within a reasonable time frame.

In removing the phrase from where it was proposed in the regulatory text, we have also added the word, ''and'' to precede the phrase, ''within a reasonable time frame,'' so that it now more appropriately reads, ''. . . *and* within a reasonable time frame.''

2. Conditions of Participation (CoP)—Discharge Planning (Proposed § 482.43)

We proposed to revise the existing requirements in the form of 6 standards at § 482.43. The most notable proposed revision was to require that all inpatients and specific categories of outpatients be evaluated for their discharge needs and have a written discharge plan developed. We proposed to retain many of the current discharge planning concepts and requirements, but proposed to revise them to provide more clarity and to place emphasis on the development of each patient's individual discharge plan as opposed to the burdensome, current requirements that place more emphasis on the evaluations to determine which patients need discharge plans. We also proposed to require specific discharge instructions for all patients.

We proposed to continue our efforts to reduce unnecessary and costly patient readmissions by improving the discharge planning process that would require hospitals to take into account the patient's goals and preferences in the development of their plans and to better prepare patients and their caregiver/support persons (or both) to be active participants in self-care and by implementing requirements that would improve patient transitions from one care environment to another, while maintaining continuity in the patient's plan of care. The following is a discussion of each of the proposed standards.

We proposed at § 482.43, Discharge planning introductory paragraph, to require that a hospital have an effective discharge planning process that focuses on the patients' goals and preferences and on preparing patients' and, as appropriate, their caregivers/support person(s) to be active partners in their post-discharge care, ensuring effective patient transitions from hospital to post-acute care while planning for post-discharge care that is consistent with the patient's goals of care and treatment preferences, and reducing the likelihood of hospital readmissions.

Our proposed hospital regulatory requirements were the basis for all other proposed discharge planning requirements as set out in the proposed rule. Since application of the proposed regulatory language for hospitals might be burdensome for CAHs and HHAs, we tailored specific proposed requirements to each providers' and suppliers' unique situation.

Many commenters remarked on the proposed discharge planning regulations for hospitals, but indicated that their comments could also be applied to CAHs. Therefore, where appropriate, we included CAHs in this section of the final rule.

Comment: Most commenters strongly supported a person-centered approach that places the patient at the center of the discharge planning process by requiring hospitals to develop and implement a discharge planning process that focuses on the patient's goals and preferences. Several of these commenters expressed concern that these proposed discharge planning requirements were unclear.

Response: We thank the commenters for their feedback regarding a person-centered approach to discharge planning. We continue to believe that hospitals should take into consideration a patient's goals of care and treatment preferences and we note that person-centered care is particularly important when patients are discharged to home or to community-based services. In response to the public comments that we received that expressed concern about the clarity of the proposed discharge planning requirements, we have revised the wording of the requirements. Specifically, we are finalizing the discharge planning introductory paragraph with minor changes in § 482.43, and we are continuing to emphasize the importance of the consideration of the patient's goals of care and treatment preferences during the discharge planning process and within the discharge plan. As we discuss in detail in the subsequent sections of this final rule, we also align, where appropriate, and as informed by the public comments, our final discharge planning requirements for hospitals (and CAHs) with the mandates in section 1861(ee)(1) of the Act.

Final Decision: After consideration of the comments we received on the proposed rule, we are finalizing the first sentence in the introductory paragraph

of § 482.43 with minor modifications, to state that the hospital must have an effective discharge planning process that focuses on the patient's goals and treatment preferences and includes the patient and his or her caregivers/support person(s) as active partners in the discharge planning for post-discharge care. The discharge planning process and the discharge plan must be consistent with the patient's goals for care and his or her treatment preferences, ensure an effective transition of the patient from hospital to post-discharge care, and reduce the factors leading to preventable hospital readmissions. The remaining language for the introductory paragraph remains the same.

3. Design (Proposed § 482.43(a))

We proposed to establish a new standard, at § 482.43(a), ''Design,'' and would require that hospital medical staff, nursing leadership, and other pertinent services provide input in the development of the discharge planning process. We also proposed to require that the discharge planning process be specified in writing and be reviewed and approved by the hospital's governing body. We would expect that the discharge planning process policies and procedures would be developed and reviewed periodically by the hospital's governing body.

Comment: A number of commenters approved of the proposed new standard at § 482.43(a), including one commenter that noted that physician involvement in the design of a hospital's discharge policies and procedures is essential to its success. Several commenters submitted comments questioning the proposed requirements regarding the role of the governing body, medical staff, and relevant departments in relationship to developing the discharge planning process, and suggested that the final regulations be much less prescriptive regarding these roles. One commenter questioned the practical enforceability of the requirement for a hospital to have its discharge planning process in writing and approved by the hospital's governing body. Many commenters made suggestions for additions of specific disciplines and entities to be consulted when developing the discharge planning process. One comment suggested that hospitals and CAHs should be required to use a risk-stratification approach (that is, an approach for identifying and predicting which patients are at high risk, or likely to be at high risk, and prioritizing the management of their care in order to prevent worse outcomes) among the elements of a hospital's discharge planning policies and procedures. Another commenter suggested that there should be a requirement for performance metrics as part of the design of a discharge process so as to inform formative assessment of policies, plans, and procedures, and their success or need for change. Still other commenters recommended that CMS not be overly prescriptive in the proposed design of the discharge planning process, and recommended that CMS put forward a design approach that would allow for customization based on patient needs. However, most commenters who made suggestions related to this section expressed concern about the burden of the proposed design requirement and whether those burdens outweighed any potential, though not proven, benefits of the requirements.

Response: Based on the comments that we received, we agree with commenters who stated that this proposal was too process-oriented and too prescriptive. Further, we believe that any additional requirements added to this section would make the discharge planning requirements even more prescriptive and burdensome, which would not reflect the concerns expressed by the majority of commenters. We therefore are not finalizing the requirements in § 482.43(a). Hospitals and CAHs may choose to include any of the factors that we originally proposed, as well as those described by commenters, in designing their discharge planning process. We encourage hospitals and CAHs to consider performance metrics when designing their discharge processes. We also encourage the use of performance metrics for hospitals when they reassess their discharge planning processes on a regular basis and urge hospitals to consider including these reassessments as projects within their Quality Assessment and Performance Improvement (QAPI) programs.

Comment: Several commenters recommended that CMS require hospitals to review their discharge planning processes every 2 years.

Response: We continue to believe that hospitals and CAHs should assess their discharge planning processes on a regular basis. However, we believe that it is not appropriate, and is in fact unduly burdensome, to establish a specific timeframe for this review. We believe that each hospital and CAH should have the flexibility to establish its own timeframe for periodic review. While we are not establishing a specific timeframe requirement in order to preserve flexibility for hospitals and CAHs, we would recommend that a hospital or CAH to do its periodic review every 2 years at a minimum. In addition, hospitals and CAHs would still have the flexibility to perform this review more frequently than every 2 years if they wish to do so.

We therefore are finalizing a provision at § 482.43(a)(7) (as originally proposed at § 482.43(c)(10)) that would require a hospital (or a CAH) to assess its discharge planning process on a regular basis, which would include ongoing, periodic review of a representative sample of discharge plans, including those patients who were readmitted within 30 days of a previous admission, to ensure that the plans are responsive to patient post-discharge needs.

Comment: One commenter recommended that the final rule include an explicit requirement that a hospital's discharge policies and procedures accommodate the needs of patients whose primary language is not English.

Response: As we noted previously, and in order to encourage patient engagement and understanding of their discharge plan or instructions, we recommend providers follow the National Standards for Culturally and Linguistically Appropriate Services (CLAS) in Health and Health Care (*https://www.thinkculturalhealth.hhs.gov/clas/standards*), which provide guidance on providing instructions in a culturally and linguistically appropriate manner.

Final Decision: After consideration of the comments we received on the proposed rule, we are not finalizing the proposed design requirements at § 482.43(a).

4. Applicability (Proposed § 482.43(b))

We proposed to revise the current requirement (§ 482.43(a)), which requires a hospital to identify those patients for whom a discharge plan is necessary at proposed § 482.43(b), ''Applicability.'' We proposed to require that the discharge planning process apply to all inpatients, as well as certain categories of outpatients, including, but not limited to patients receiving observation services (since these patients are often kept in the hospital overnight), patients who are undergoing surgery or other same-day procedures where anesthesia or moderate sedation is used, emergency department patients who have been identified by a practitioner as needing a discharge plan, and any other category of outpatient as recommended by the medical staff, approved by the governing body, and specified in the hospital's discharge planning policies and procedures. We thought at the time that the aforementioned categories of patients would benefit from an evaluation of

their discharge needs and the development of a written discharge plan.

Comment: While a number of commenters agreed with the proposal to broaden the categories of patients who would be evaluated for post-discharge need, stating that they believed the inclusion of these categories of patients was necessary for effective transition from acute settings to post-acute settings, the majority of commenters expressed concern over the undue burden that they believe would result from this proposed change, particularly for small and rural hospitals. Many stated that they believe that the current evaluation requirement is effective for screening and targeting high-risk patients who have true discharge needs. A number of commenters stated that they already routinely screen certain categories of outpatients, such as observation patients, and that automatically requiring discharge plans for patients in these categories would shift resources away from those patients most in need of discharge plan.

Response: We agree with commenters that the requirement needs to be scaled back in its scope and applicability to a more flexible requirement. We also agree that the proposed requirement could potentially have the unintended consequence of shifting hospital resources away from those patients most in need of a discharge plan. Finally, we agree with commenters that a discharge planning evaluation and screening of patients who have discharge needs is a more appropriate approach to selecting patients for establishing a discharge evaluation. We therefore are not finalizing the requirements at proposed § 482.43(b). Instead, we are finalizing requirements at § 482.43(a) introductory text and (a)(2), respectively, that would require that a hospital's discharge planning process must identify, at an early stage of hospitalization (ideally when the patient is admitted as an inpatient, or shortly thereafter), those patients who are likely to suffer adverse health consequences upon discharge in the absence of adequate discharge planning and must provide a discharge planning evaluation for those patients so identified, as well as for other patients upon the request of the patient, patient's representative, or patient's physician. In addition, at § 482.43(a)(2), a discharge planning evaluation must include an evaluation of a patient's likely need for appropriate post-hospital services, including, but not limited to, hospice care services, post-hospital extended care services, and home health services, and must also determine the availability of those services.

The regulatory flexibility and framework of these final requirements will allow each hospital to establish and tailor its own policy parameters for discharge planning evaluations according to its specific patient populations, individual institutional needs and resources, and own medical staff recommendations as long as the policies and procedures established and implemented meet or exceed the requirements finalized in this rule.

Final Decision: After consideration of the comments we received on the proposed rule, we are revising proposed § 482.43(b), to be finalized as § 482.43(a) introductory text and (a)(2), to require that the hospital's discharge planning process identify, at an early stage of hospitalization, those patients who are likely to suffer adverse health consequences upon discharge in the absence of adequate discharge planning, and must provide a discharge planning evaluation for those patients so identified, as well as for other patients upon the request of the patient, patient's representative, or patient's physician. A discharge planning evaluation must include an evaluation of a patient's likely need for appropriate post-hospital services, including, but not limited to, hospice care services, post-hospital extended care services, and home health services; such evaluation must also determine the availability of those services.

5. Discharge Planning Process (Proposed § 482.43(c))

We proposed at § 482.43(c), ''Discharge planning process,'' to require that hospitals implement a discharge planning process to begin identifying, early in the hospital stay, the anticipated post-discharge goals, preferences, and needs of the patient and begin to develop an appropriate discharge plan for the patients identified in proposed § 482.43(b). We proposed to require that the discharge plan be tailored to the unique goals, preferences, and needs of the patient. We proposed 10 specific elements to be addressed in the discharge planning process as follows:

- Proposed § 482.43(c)(1): We proposed that an RN, social worker, or other personnel qualified in accordance with the hospital's discharge planning policy, coordinate the discharge needs evaluation and the development of the discharge plan.
- Proposed § 482.43(c)(2): We proposed to require that a hospital must begin to identify anticipated discharge needs for each applicable patient within 24 hours after admission or registration, and the discharge planning process is completed prior to discharge home or transfer to another facility and without unduly delaying the patient's discharge or transfer. If the patient's stay was less than 24 hours, the discharge needs would be identified prior to the patient's discharge home or transfer to another facility.
- Proposed § 482.43(c)(3): We proposed to retain and clarify the current requirement at § 482.43(c)(4), regarding reassessment of the plan as necessary. We also proposed to require that the hospital's discharge planning process ensure an ongoing patient evaluation throughout the patient's hospital stay or visit in order to identify any changes in the patient's condition that would require modifications to the discharge plan.
- Proposed § 482.43(c)(4): We proposed that the practitioner responsible for the care of the patient be involved in the ongoing process of establishing the patient's goals of care and treatment preferences that inform the discharge plan, just as they are with other aspects of patient care during the hospitalization or outpatient visit.
- Proposed § 482.43(c)(5): We proposed to require that, as part of identifying the patient's discharge needs, the hospital consider the availability of caregivers and community-based care for each patient. We proposed that hospitals consider the patient's or caregiver's capability and availability to provide the necessary post hospital care. We proposed that hospitals consider the availability of, and access to, non-health care services for patients. We proposed that hospitals consider the following in evaluating a patient's discharge needs, including, but not limited to:
  - Admitting diagnosis or reason for registration;
  - Relevant co-morbidities and past medical and surgical history;
  - Anticipated ongoing care needs post-discharge;
  - Readmission risk;
  - Relevant psychosocial history;
  - Communication needs, including language barriers, diminished eyesight and hearing, and self-reported literacy of the patient, patient's representative or caregiver/support person(s), as applicable;
  - Patient's access to non-health care services and community-based care providers; and
  - Patient's goals and treatment preferences.
- Proposed § 482.43(c)(6): We proposed a new requirement that the patient and the caregiver/support person(s), be involved in the development of the discharge plan and

informed of the final plan to prepare them for post-hospital care.

• Proposed § 482.43(c)(7): We proposed a new requirement that the patient's discharge plan address the patient's goals of care and treatment preferences.

• Proposed § 482.43(c)(8): We proposed that the hospital assist patients and their families in selecting a post-acute care provider by using and sharing data on quality measures and data on resource use measures as is relevant and applicable to the patient's goals of care and treatment preferences.

• Proposed § 482.43(c)(9): We proposed to require that the patient's discharge needs evaluation and discharge plan be documented and completed on a timely basis, based on the patient's goals, preferences, strengths, and needs, so that appropriate arrangements for post-hospital care could be made before discharge.

• Proposed § 482.43(c)(10): We proposed to require hospitals to assess their discharge planning processes on a regular basis, including ongoing review of a representative sample of discharge plans, including patients who were readmitted within 30 days of a previous admission, to ensure that they are responsive to patient discharge needs.

Comment: Numerous commenters expressed overall disagreement with the overly detailed, prescriptive nature of the proposed requirements. While they supported the overall goal of improving discharge planning, commenters expressed concern about stifling innovation, interfering with patient-provider relationships, overburdening discharge planning staff, and diverting patient care resources to regulatory process requirements.

Response: We are sensitive to the concerns expressed by commenters, as we share their goal of streamlining the regulations to balance the need for minimum health and safety requirements with the need for maximum hospital flexibility to achieve patient outcomes. In light of the concerns expressed by commenters, we have significantly revised the proposed requirements to focus less on specific processes and prescriptive elements, and more on overall outcomes and flexibilities. We have also reorganized and simplified the regulatory requirements (such as those originally proposed in § 482.43(c)(9) and (10)), where appropriate, to improve their clarity and understandability.

Comment: A small number of commenters recommended that we mandate that nurses with training and experience in rehabilitation, as well as respiratory therapists, be involved in the discharge needs evaluation and in the development of the discharge plan.

Response: We do not believe that it is appropriate to require hospitals to use certain specialty practitioners in any particular step of the discharge planning process. However, hospitals are not precluded from doing so. We believe that the requirements should allow hospitals to determine what is appropriate for its patient population and its facility in such circumstances.

Comment: The majority of commenters opposed the establishment of a specific timeframe of 24 hours after admission or registration for beginning to identify anticipated discharge needs for each applicable patient (proposed § 482.43(c)(2)). Some commenters noted that applying a 24-hour requirement, without consideration of patient need, could result in a waste of valuable hospital resources or inaccurate conclusions.

Response: We agree with commenters that setting rigid time frames may not take into account the facts and circumstances of a particular patient's care; therefore, we are removing this proposed requirement from this final rule.

Comment: Several commenters supported our proposal to require that the hospital's discharge planning process require a regular re-evaluation of the patient's condition to identify changes that require modification of the discharge plan and that the discharge plan be updated, as needed, to reflect these changes. However, one commenter asserted that this requirement is redundant, as it is already included in the regular course of care for patients. Another commenter supported the proposed requirement and noted that the needs of patients with dementia and their caregivers evolve frequently.

Response: We continue to believe in the importance of requiring that hospital's discharge planning process require a regular re-evaluation of the patient's condition to identify changes that require modification of the discharge plan and that the discharge plan be updated, as needed, to reflect these changes. The evaluation to determine a patient's continued hospitalization (or in other words, their readiness for discharge or transfer), is a current standard medical practice, and additionally is a current hospital CoP requirement at § 482.24(c). We are finalizing the requirement from proposed § 482.43(c)(3) with modifications at § 482.43(a)(6) in this final rule to require regular re-evaluation of the patient's condition to identify changes that require modification of the discharge plan. The discharge plan must be updated, as needed, to reflect these changes. We note that these requirements would allow for hospitals to consider the specific needs of patients with dementia.

Comment: One commenter requested that the interpretive guidance not impose a burdensome documentation requirement for hospitals when conducting the re-evaluation of a patient's discharge needs.

Response: The interpretive guidance is developed in accordance with the CoP regulations. Therefore, while the interpretive guidance will further clarify the CoPs, they will not impose additional requirements beyond those in the CoPs.

Comment: A few commenters requested clarification on the definition of ''the practitioner responsible for the care of the patient'' in the proposed requirement that the practitioner responsible for the care of the patient be involved in the ongoing process of establishing the patient's goals of care and treatment preferences that inform the discharge plan, just as they are with other aspects of patient care during the hospitalization or outpatient visit. The commenter asked whether the practitioner will always be a hospital-based provider or the patient's personal physician. One commenter noted that this requirement would be difficult to complete for a medically complex patient with multisystem involvement. One commenter opposed the inclusion of this requirement in the CoPs for hospitals on the basis that hospitals do not control practitioner-patient interaction. The commenter also noted the absence of an explanation regarding the language stating that a practitioner should be ''involved in'' the process.

Response: We agree that the proposed requirement does not allow for flexibility for hospitals, CAHs, and practitioners, especially for multi-facility providers that treat medically complex patients. Taking into account the concerns that we have received on this proposal, we are not finalizing the proposed requirements in § 482.43(c)(4).

Comment: Many commenters supported the proposed requirement for hospitals to consider certain criteria while evaluating a patient's discharge needs, specifically highlighting proposals related to psychiatric and behavioral health needs, and non-medical needs and support services. Some commenters suggested that hospitals should be required to inform patients and their caregivers of their right to receive post-acute care in their home or a community setting, as is appropriate for the patient's care and

needs, so long as the placement can be reasonably accommodated. One commenter recommended that hospitals review a patient's need for the use of technology and whether or not technology is necessary to maintain a patient's health and safety or individual goals. A few commenters recommended specific revisions to the proposed requirement that the hospital consider the availability of caregivers and community-based care for each patient, including recommendations such as requiring hospitals to consider a patient's socioeconomic condition when identifying and evaluating a patient's anticipated post-discharge needs, and consider patient eligibility for Program of All-Inclusive Care for the Elderly (PACE) and services through the Veterans Administration.

However, other commenters stated that the proposed requirements that a hospital must consider in evaluating a patient's discharge needs are overly prescriptive and overly detailed. A few commenters stated that a requirement to consider a patient's access to non-health care services and community-based care providers would be burdensome for hospitals. One commenter stated that while these services may benefit the patient, hospitals cannot be expected to provide an exhaustive list of services and that the hospital has limited reliable methods to identify non-health care resources in the community.

One commenter disagreed with the use of the term ''consider'' in the proposed requirement, stating that using the term ''consider'' may cause interpretation differences when surveying for compliance. The commenter recommended that CMS clarify that discharge plans can vary, depending on the patient, and that in many cases a patient's discharge instructions could constitute a ''discharge plan.'' The commenter also recommended that CMS coordinate with AOs to develop mutually agreed upon interpretive guidelines, which all surveyors would use when assessing compliance with this provision.

Response: We agree that the proposed list could be burdensome, and, therefore, we are not finalizing it in this final rule. We are instead finalizing a requirement at § 482.43(a)(2) that a discharge planning evaluation include an evaluation of a patient's likely need for appropriate post-hospital services, including, but not limited to, hospice care services, post-hospital extended care services, home health services, and non-health care services and community based care providers, and that the evaluation must also include a determination of the availability of the appropriate services as well as of the patient's access to those services.

We acknowledge that patients and families seeking post-hospital non-health care services, as well as the discharge planning staff of hospitals assisting them with this process, frequently find themselves confronted with what can be an overwhelming number of organizations and requirements. This search occurs at a time of vulnerability or crisis, and can result in patients, families, and caregivers making decisions based on incomplete, and sometimes inaccurate, information about their options. In partnership with the Veterans Health Administration and the Administration for Community Living (ACL) within HHS, CMS is working collaboratively with states to streamline access to long-term services and supports (LTSS) through a network of organizations, including Aging & Disability Resource Centers (ADRCs), Area Agencies on Aging (AAAs), and Centers for Independent Living (CILs)) that make up a statewide No Wrong Door (NWD) system. We expect that CILs, AAAs, and ADRCs would assist patients in accessing LTSS, and would have staff trained to help patients and their families exercise their choice and control over the types of LTSS that work best for them in their lives. Along with the U.S. Department of Veterans Affairs, CMS formally recognized the importance of state ADRC/NWD systems by publishing the NWD System Medicaid Administrative Guidance (*https://www.medicaid.gov/medicaid/financing-and-reimbursement/downloads/no-wrong-door-guidance.pdf*) and the ''Expanded Access to Non-VA Care Through the Veterans Choice Program Rule'' interim final rule (80 FR 674991, December 1, 2015.)

We therefore urge hospitals to develop collaborative partnerships with these community based care organizations in their respective areas to improve transitions of care that might support better patient outcomes. Regarding hospital expectations, hospitals are required to comply with all applicable Federal laws, including the Americans with Disabilities Act (ADA). It is our expectation that hospitals would administer their services, programs, and activities in the most integrated setting appropriate to individuals with disabilities, in compliance with the ADA. For further information on ADA compliance, we recommend that readers visit *https://www.ada.gov/.* For further information about other nondiscrimination laws see *http://www.hhs.gov/civil-rights.* We expect hospitals to develop collaborative relationships with their area and state ADRCs, AAAs, and CILs that are knowledgeable of the availability of these services in the community and would be able to help connect patients as well as their families, friends, and caregivers to these resources. We would also expect that these hospital efforts to collaborate and to connect patients with these types of community-based care organizations will be documented in the medical record. It is for this reason that we urge hospitals to develop ongoing and collaborative partnerships with ADRCs, AAAs, and CILs. We remind hospitals that they can find more information on community-based services and community-based organizations at *http://www.acl.gov/.*

Considerations must also be made for those patients whose personal homes have been adversely impacted due to an emergency or disaster. We note that the Emergency Preparedness final rule requires health care facilities to communicate with state and local officials during a disaster (81 FR 63860, September 16, 2016). Therefore, in the event of such an emergency, we would expect that patients that are determined for safe discharge to a personal home that may have been adversely impacted should not be directed to shelters without prior consultation with public health and emergency management officials overseeing those shelters. Additionally, we would expect that patients that are anticipated to be discharged to another inpatient facility that may be adversely impacted should not be sent to a shelter without prior consultation with public health and emergency management officials overseeing those shelters and with health care coalitions, where available, that may know of other inpatient facility options. In addition, we refer readers to guidance from Office for Civil Rights on emergency preparedness and ensuring at risk individuals have access to emergency services at the following link: *https://www.hhs.gov/civil-rights/for-individuals/special-topics/emergency-preparedness/index.html.*

Comment: We received several comments regarding community based care organizations. Comments included the following recommendations:

- Mandate that providers collaborate and coordinate with community based organizations on the availability of community supports at discharge.
- Include specific references to CILs, ADRCs, and AAAs in the regulation and provide patient instructions on their use.

• Clarify how collaboration between hospitals and community based organizations would be encouraged and funded, including requiring Medicare and Medicaid reimbursement of AAAs and community-based organizations.

• Require that community based providers be included in the early stages of planning for a patient's discharge.

• Clarify how a hospital would know what facility or agency a patient would use before discharge.

• Clarify timelines for considering the availability of, and access to, non-health care services for patients, specifically in instances where the post-acute care provider had a physical accessibility issue.

Response: As we have already stated in this final rule, we believe that community based care organizations, including CILs, ADRCs, and AAAs, play an important part in helping individuals, who are returning home or who want to avoid institutionalization, by connecting them to community services and supports. Currently, many of these organizations already help older adults and people with disabilities with transitions across settings, from hospitals and PAC settings back to home. Because of the important role that community based organizations play, we strongly encourage hospitals to develop collaborative partnerships with providers of community-based services. We believe that such collaboration will help with successful patient transitions.

While we encourage, and even urge, collaboration with organizations such as CILs, AAAs, and ADRCs to assist patients with access to LTSS, we believe that mandating a collaborative relationship could be overly burdensome for hospitals. In order to demonstrate compliance with a proof of collaboration requirement like the one recommended here by some commenters, hospitals would need to provide extensive documentation solely for Medicare certification and participation purposes. Such an approach runs counter to current CMS initiatives to place patients over paperwork. Hospitals should be afforded the flexibility to provide information about these organizations and collaborate with these entities as is appropriate for the patient and based on the patient's goals of care and treatment preferences. We expect that hospitals would be responsive to the patient regarding his or her needs and provide information to the patient about these organizations as well as form collaborative relationships with these entities as appropriate.

This final rule does not mandate a specific methodology for how collaboration between hospitals and community based providers should be conducted nor does it mandate that hospitals (when developing a patient discharge plan) must consider a patient's eligibility for community based services, any patient wait lists for services, or any time frames established by community based providers for the initiation of services. We believe that such detailed mandates would be overly burdensome for hospitals and inappropriate for these regulations. However, as we stated above, we are finalizing a requirement at § 482.43(a)(2) that a hospital include an evaluation of a patient's likely need for appropriate non-health care services and community based care providers, and must also include a determination of the availability of, and the patient's access to, those services as part of the patient's discharge planning evaluation. We encourage hospital personnel to be knowledgeable about the services that are provided by their local community based organizations and expect hospital personnel to be able to offer their patients guidance on how to connect with their local community based organizations. Once a patient is discharged, we would not expect hospitals and CAHs to be responsible for ensuring that a patient has received non-health care services (including home modifications), as this would be outside the scope of a hospital's or CAH's responsibility. Once a patient is connected with a community based organization, such as an ADRC, AAA, or CIL, the responsibility for ensuring that the patient is actually receiving non-health care services, including home modifications, becomes that of the community based organization and the community provider of the services and supports. We also do not believe that hospitals and CAHs should hold patients until physical accessibility issues are resolved, although we understand that sometimes hospitals hold patients until a bed is available at a corresponding PAC facility. Hospitals and CAHs can provide patients with resources regarding supportive housing and home and physical environment modifications including assistive technologies and, where appropriate, medical equipment and supplies, including back-up batteries. We refer readers to further guidance that can be found in the previously provided web links in the discussion on the proposed requirements for § 482.43(c)(5) and on the final requirements for § 482.43(a)(2) of this final rule.

Finally, comments regarding funding for community based organizations are outside the scope of this rule.

Comment: Many commenters supported the proposal to require that the discharge plan address the patient's goals of care and treatment preferences. A few commenters asked for clarification on how hospitals will be expected to demonstrate the incorporation of the patient's goals and wishes into the plan. The commenters gave specific examples of instances where patients may leave against medical advice, may be undocumented and not as forthcoming about information, or patients who may be embarrassed about needing social services. The commenters noted that hospitals should try to work with the patients as much as possible and should not be penalized if patients decline medical or discharge planning assistance. One commenter stated that sometimes patient goals and preferences are not consistent with the clinical needs of the patient or the resources available to the patient post-discharge. Therefore, the commenter concluded that the patient's goals and preferences cannot be fully accommodated in the final discharge plan. The commenter recommended that CMS modify the language used in the rule and clarify that the patient's goals and preferences must be considered during the discharge planning process, but that it is ultimately the decision of the practitioner responsible for the care of the patient whether the goals and preferences can be incorporated into the discharge plan.

Response: While we are modifying this proposal by finalizing it in the introductory paragraph at § 482.43, we note that we still expect that the patient's goals of care and treatment preferences would be included in the patient's medical records. Similarly, we understand that situations may arise where patients may be uncooperative or may refuse to participate in the discharge planning process. We also expect hospitals and CAHs to document the patient's refusal to participate in the discharge planning process, and that such attempts to incorporate the patient and/or the patient's caregiver in the discharge planning process were made, in the medical record. While we understand the commenter's concerns that a patient's goals of care and treatment preferences might not always align with the practitioner's recommended medical care, we continue to believe that it is important for hospitals and CAHs to develop and implement an effective discharge planning process that focuses on and,

where appropriate, is consistent with the patient's goals and preferences. We expect that these goals and preferences will be included in the discharge plan and would reasonably relate to the patient's medical care or treatment preferences, preferred non-health care services, post-acute care, or community-based care post-hospitalization. While we expect that practitioners will establish the most appropriate course of care for their patient and document this in the patient's discharge plan, we note that patients cannot be forced to follow their discharge plan and that patients have the right to refuse treatment or to leave the hospital or CAH against medical advice.

Final Decision: After consideration of the comments we received on the proposed rule, we are finalizing the discharge planning requirements with the following modifications:

- Revising the language in the introductory paragraph of § 482.43.
- Revising and redesignating proposed § 482.43(a), (b), and (c) as § 482.43(a) ''Discharge planning process.'' As revised, § 482.43(a) will incorporate and combine provisions of the current hospital discharge planning requirements (some of which are statutorily required for hospitals) with revised elements contained within some provisions of the proposed requirements at § 482.43(c).
- Redesignating the requirements in proposed § 482.43(c)(10) as § 482.43(a)(7), which would still require hospitals to assess their discharge planning processes on a regular basis, which would include ongoing, periodic review of a representative sample of discharge plans, including those patients who were readmitted within 30 days of a previous admission, to ensure that the plans are responsive to patient post-discharge needs.
- Withdrawing our proposal at § 482.43(c) to require that the hospital's discharge planning process must ensure that the discharge goals, preferences, and needs of each patient are identified and result in the development of a discharge plan for each patient in accordance with paragraph (b) of this section.
- Revising and redesignating the requirements in proposed § 482.43(c)(1) to state that any discharge planning evaluation or discharge plan required under this paragraph must be developed by, or under the supervision of, a registered nurse, social worker, or other appropriately qualified personnel. We are finalizing these requirements as § 482.43(a)(5).
- Revising and redesignating § 482.43(c)(2) to eliminate the 24-hour time frame requirements and retaining, with minor revisions, the current requirements at § 482.43(a) to state that the hospital must identify at an early stage of hospitalization all patients who are likely to suffer adverse health consequences upon discharge if there is no adequate discharge planning. The hospital must provide a discharge planning evaluation for those patients so identified as well as for other patients upon the request of the patient, the patient's representative, or patient's physician. We are finalizing these requirements as § 482.43(a).
- Finalizing proposed § 482.43(c)(3) without modification and redesignating these requirements as § 482.43(a)(6) to state that the hospital's discharge planning process must require regular re-evaluation of the patient's condition to identify changes that require modification of the discharge plan. The discharge plan must be updated, as needed, to reflect these changes. Withdrawing proposed § 482.43(c)(4). Revising § 482.43(c)(5) to state that a discharge planning evaluation must include an evaluation of a patient's likely need for appropriate post-hospital services, including, but not limited to, hospice care services, post-hospital extended care services, and home health services, and non-health care services and community based care providers, and must also determine the availability of the appropriate services as well as of the patient's access to those services. We are including these requirements as § 482.43(a)(2).
- Revising § 482.43(c)(6) to state that the discharge planning evaluation must be included in the patient's medical record for use in establishing an appropriate discharge plan and the results of the evaluation must be discussed with the patient (or the patient's representative). This requirement will be included in § 482.43(a)(3).
- Modifying § 482.43(c)(7) by requiring that hospitals have an effective discharge planning process that focuses on the patient's goals and preferences and includes the patient and his or her caregivers/support person(s) as active partners in the discharge planning for post-discharge care. The discharge planning process and the discharge plan must be consistent with the patient's goals for care and his or her treatment preferences, ensure an effective transition of the patient from hospital to post-discharge care, and reduce the factors leading to preventable hospital readmissions. These requirements are included in the introductory paragraph at § 482.43.
- Modifying the requirements at proposed § 482.43(c)(9) to state that any discharge planning evaluation must be made on a timely basis to ensure that appropriate arrangements for post-hospital care will be made before discharge and to avoid unnecessary delays in discharge. We are finalizing these requirements in § 482.43(a)(1).
- We are making a technical revision to the proposal at § 482.43(c) to clarify the intent of the requirements related to *post-acute care services.* This requirement applies to patients whose discharge plan includes a referral to HHA services or transfer to a SNF, IRF, or LTCH.

6. Discharge to Home (Proposed § 482.43(d))

We proposed to re-designate and revise the current requirement at § 482.43(c)(5) (which currently requires that as needed, the patient and family or interested persons be counseled to prepare them for post-hospital care) as § 482.43(d), ''Discharge to home,'' to require that the discharge plan include, but not be limited to, discharge instructions for patients described in proposed § 482.43(b) in order to better prepare them for managing their health post-discharge. The phrase ''patients discharged to home'' would include, but not be limited to, those patients returning to their residence, or to the community if they do not have a residence, and who require: Follow-up with their PCP and/or a specialist and who might also be receiving post-acute care from HHAs, hospice services, and/or any other type of outpatient health care services. The phrase ''patients discharged to home'' would not refer to patients who are transferred to another inpatient hospital or CAH, inpatient hospice facility, or a SNF.

Proposed § 482.43(d)(1): We proposed that discharge instructions must be provided at the time of discharge to patients, or the patient's caregiver/support person(s) (or both), who are discharged home and who also might be referred to PAC services. We also proposed that practitioners/facilities (such as an HHA or hospice agency and the patient's PCP), receive the patient's discharge instructions at the time of discharge if the patient is referred to follow-up PAC services.

Proposed § 482.43(d)(2): We proposed to set forth the minimum requirements for discharge instructions as follows: Instructions to the patient and his or her caregivers about care duties that they would need to perform in the patient's home as determined in the patient's discharge plan; written information on the warning signs and symptoms that

patients and caregivers should be aware of with respect to the patient's condition; all medications prescribed and over-the-counter for use after the patient's discharge from the hospital (with reconciliation of all medications used by the patient prior to admission), including the name, indication, and dosage of each medication along with any significant risks and side effects of each drug as appropriate to the patient; written instructions, in paper or electronic format (or both), provided to the patient; and documenting follow-up care, appointments, pending and/or planned diagnostic tests, and any pertinent telephone numbers for practitioners that might be involved in the patient's follow-up care or for any providers/suppliers to whom the patient has been referred for follow-up care.

Proposed § 482.43(d)(3): We proposed to require hospitals send the following information to the practitioner(s) responsible for follow-up care, if the practitioner has been clearly identified: A copy of the discharge instructions and the discharge summary within 48 hours of the patient's discharge; pending test results within 24 hours of their availability; and all other necessary information, as specified in proposed § 482.43(e)(2).

Proposed § 482.43(d)(4): We proposed to require, for patients discharged to home, that the hospital establish a post-discharge follow-up process.

Comment: Numerous commenters expressed overall disagreement with the overly detailed, prescriptive nature of the proposed requirements. While they supported the overall goal of improving discharge planning, commenters expressed concern about overburdening discharge planning staff, duplicating existing hospital discharge planning practices, and diverting patient care resources to regulatory process requirements.

Response: We are sensitive to the concerns expressed by commenters, as we share their goal of streamlining the regulations to balance the need for minimum health and safety requirements with the need for maximum hospital flexibility to achieve patient outcomes. In light of the concerns expressed by commenters, we have removed the majority of the proposed requirements, specifically those at § 482.43(d)(1), (2), and (4), and have significantly revised the requirements of proposed § 482.43(d)(3) to reduce regulatory burden.

Comment: Several commenters supported the proposal to provide discharge instructions to the patient and/or the patient's caregiver/support person(s), and the PAC provider or supplier, if the patient is referred to PAC services. Additionally, some commenters sought clarification regarding specific issues, such as whether hospitals could share post-hospital care instructions with the patient and/or the patient's caregiver prior to actual discharge and whether there would be HIPAA violations when a hospital sent discharge instructions to the PAC provider or supplier.

Response: Although we are not finalizing this requirement as proposed, hospitals or CAHs are not prevented from developing discharge instructions or sharing discharge information in accordance with applicable law earlier than the time of discharge. Additionally, we note that providing a patient with his or her discharge instructions is a long-standing standard of practice for hospitals when discharging inpatients as well as when releasing patients from care in other areas of the hospital (for example, the emergency and ambulatory surgery departments). Because of this, we believe that it is unnecessary to specifically require it here, but we encourage hospitals and CAHs to continue this long-standing standard of practice that serves as a simple way of not only informing, but also engaging, the patient (and/or the patient's caregiver/support person(s)) regarding his or her continued care upon discharge from the hospital or CAH. We note hospitals, HHAs, and CAHs are required to send certain discharge information to the PAC provider or practitioner(s) responsible for follow-up care, if the practitioner is known and has been clearly identified. We have no reason to believe that sending discharge information to such PAC providers or suppliers would be considered a HIPAA violation, since disclosures for treatment, care coordination, and quality improvement purposes are generally permitted under 45 CFR part 164.

Comment: Several commenters recommended that hospitals use the National CLAS Standards for guidance on providing instructions in a culturally and linguistically appropriate manner and also recommended the use of the ''teach-back'' method to confirm the patient's or the patient's caregiver/support person's (or both) understanding of the discharge instructions.

Response: While we are not finalizing the proposed discharge instruction requirements discussed here (in response to public comments that noted the overly detailed, prescriptive nature of these proposed requirements) and although we also did not propose requirements that included the commenters' recommendations, we would still like to encourage hospitals to consider these recommendations for their discharge planning processes. Therefore, we refer readers to the following links for more information regarding the use of the ''teach-back'' method during the discharge planning process as well as for additional information on the National CLAS standards:

- *https://www.thinkculturalhealth.hhs.gov/clas/standards.*
- *http://www.teachbacktraining.org.*

Comment: A few commenters submitted comments regarding documentation. One commenter stated that hospitals should be required to include the patient's discharge instructions in the medical record, and that the medical record should also include documentation that the patient and caregiver were offered a demonstration of post-discharge care tasks and an opportunity to ask questions and receive answers on post-discharge care. A few commenters asked for clarification on the documentation requirements for patients that leave against medical advice.

Response: We encourage hospitals and CAHs to document interactions with patients and/or their caregivers in the medical record as a best practice. Patient discharge instructions, as part of the record of patient care in the hospital, are already required to be included in the medical record under the Medical Record Services requirements in § 482.24, so no new requirement is needed here. We understand that situations may arise where patients may prefer not to participate in the discharge planning process. For patients that decline to participate in the discharge planning process or leave the hospital or CAH against medical advice, we expect hospitals to document in the medical record the patient's refusal to participate in the discharge planning process, and that such attempts to include the patient and/or the patient's caregiver in the discharge planning process were made by hospital staff.

Comment: We received several comments related to the content and implementation of the proposed discharge instructions requirement. While some commenters suggested that CMS include even more specificity in the requirements, most expressed concern that CMS was requiring too much information be provided to the patient upon discharge, and that CMS should not mandate what should be included in the discharge instructions. One commenter also disagreed with the requirement that discharge instructions

be written, and requested that CMS allow for other communication methods to share this information with patients.

Response: We believe that the requirements of this section, as proposed, are overly prescriptive and we do not believe that it is appropriate to finalize a requirement that hospitals must provide specific written discharge instructions to patients. We believe that the overall involvement of the patient and caregivers, as set forth in §§ 482.43 and 485.642, in addition to the already established practice of providing discharge instructions appropriate to each patient as is the current standard of care, will ensure appropriate communication between providers, patients, and caregivers throughout the discharge planning process.

Comment: A few commenters asked about the role that Prescription Drug Monitoring Programs (PDMPs) should play in the discharge planning process.

Response: As part of the medication reconciliation process, in the proposed rule we encouraged practitioners to consult with their state's PDMPs. We also solicited comments on whether providers should be required to consult with their state's PDMP and review a patient's risk of non-medical use of controlled substances as indicated by the PDMP report. While we continue to believe that practitioners should consult with their state's PDMP if they believe it appropriate to do so, we are not mandating the use of PDMPs at this time. We further note that our rule does not preempt or conflict with state laws that may require hospital consultation with PDMPs or other PDMP-related actions. We also refer readers to the discussion on PDMPs in section II.C of this final rule.

Comment: Most commenters supported the proposed requirement that hospitals send a copy of the discharge instructions and the discharge summary, pending test results, and other necessary information to the practitioner(s) responsible for follow-up care, if the practitioner is known and has been clearly identified, and cited the importance of this information for these practitioners. However, most commenters stated that the required timeframes were overly prescriptive and requested more flexibility pertaining to these timeframes. Several commenters noted the challenges that the lack of adoption of interoperable health IT among follow-up practitioners poses for hospitals. Two commenters requested that, instead of sending test results, hospitals instead be required to make such test results available or accessible to the follow-up practitioner(s). Two commenters felt that the timeframes included in the proposed rule were too flexible and that the required information should be sent to the practitioner(s) responsible for the follow-up care of the patient at the time of discharge to prevent any unnecessary delays in the patient's follow-up treatment.

Response: We agree with the commenters that specific timeframe requirements may not be reasonable or appropriate in all situations. In this final rule, we are eliminating the specific timeframe requirements proposed in this section and revising the requirements for hospitals and CAHs to send information to the practitioner(s) responsible for follow-up care prior to the patient's first follow-up visit with the practitioner(s). We further note that we are finalizing a requirement that hospitals and CAHs must discharge the patient, and transfer or refer the patient where applicable, *along with all necessary medical information* pertaining to the patient's current course of illness and treatment, post-discharge goals of care, and treatment preferences, at the time of discharge, to the practitioners responsible for the patient's follow-up or ancillary care at § 482.43(b). We refer readers to section II.E.7 of this final rule for a more detailed discussion of this requirement.

We are not proposing a specific form, format, or methodology for the communication of this information; however, by using certified health IT, facilities can ensure that they are transmitting interoperable data that can be used by other settings, supporting a more robust care coordination and higher quality of care for patients. We note that HHS has a number of initiatives designed to encourage and support the adoption of health IT and to promote nationwide health information exchange to improve the quality of health care. While pending test results clearly would be included as part of a patient's necessary medical information that we are requiring be sent upon discharge to facilities and practitioners providing PAC and follow-up services to the patient, we also recognize that the very nature of these test results being ''pending'' precludes them from being sent at that time and hospitals would not be held accountable for sending information that they simply do not have at the time of discharge. We encourage hospitals and CAHs to find their own innovative and unique solutions to solve this issue, including any means that would ensure that these pending results are available and accessible to the appropriate facilities and practitioners at the appropriate time.

Comment: Many comments were submitted regarding the requirement to provide discharge information to the practitioner(s) responsible for follow up care. One commenter stated that the list of information may be duplicative and, in some cases, excessive. The commenters added that for patients following up with their primary care provider, many of the preventive and baseline medical history items, as well as a psychosocial assessment, would already be known to the provider. Two commenters recommended that CMS require hospitals to provide the required necessary medical information, to dialysis facilities, dialysis units, or nephrologists within 48 hours of discharge. A few commenters questioned how the hospital would monitor the information sent by the hospital to the practitioner(s) responsible for follow-up care of the patient who is being discharged to their home.

Response: We have revised this requirement to remove a number of items that were proposed to be included as part of what many commenters described as an overly and unnecessarily prescriptive list of patient medical information that was to be sent. In this final rule, the hospital is now only required to provide certain necessary medical information that we believe allows a hospital the flexibility to effectively determine and align the pertinent patient information with a specific patient based on the clinical judgment of the practitioners responsible for the care of the patient since they are the practitioners who know the patient best while he or she is receiving care in the hospital. As many commenters noted, and with which we agree, a more flexible regulatory approach, such as we are finalizing here, allowing for the determination and transfer of a particular patient's necessary medical information will provide a more thoughtful and effective means to ensure better continuity of care for a patient being discharged. However this requirement as finalized in this rule will not limit the types and amount of patient information that can be shared with practitioners responsible for the patient's follow-up or ancillary care, but will also allow the inclusion of any additional clinically relevant information that the hospital's or CAH's practitioners believe would be beneficial for the patient's transition from one care setting to another.

Similarly, this requirement that a patient's necessary medical information must be transferred at the time of discharge (and transfer or referral as

applicable) to the appropriate post-acute care service providers and suppliers, facilities, agencies, and other outpatient service providers and practitioners responsible for the patient's follow-up or ancillary care would also include dialysis facilities, dialysis units, and nephrologists for those patients where this is relevant and appropriate. Therefore, we respectfully disagree that mandating specific provider and supplier types as well as specific categories of practitioners in these requirements is necessary or appropriate. We note that we encourage providers to include any additional necessary medical information as part of the discharge summary as appropriate and also encourage them to ensure that any specific providers or suppliers or specialty practitioners that are clinically relevant to a particular patient be included in the conveyance of the necessary medical information upon discharge; for instance, when the hospital's health IT system is used to populate a discharge summary with relevant information from the patient's record. The hospital will not be responsible for monitoring information if it has been provided to the practitioner.

Further, we understand that there are special care needs for patients that are diagnosed with chronic illnesses such as kidney disease, diabetes, etc., and our requirements allow facilities to address and acknowledge these needs by sending a patient's necessary medical information to a special needs facility/provider such as a dialysis facility or nephrologist, if this information is known. However, we believe it would be burdensome to specifically mandate that facilities send this information to these providers and practitioners, or to prescribe a specific timeframe for sending the information. Instead, we are allowing facilities to have the flexibility to determine when and if this information should be sent. However, we must note here again that a patient's dialysis care plan information is part of his or her necessary medical information. We believe that this information should be conveyed upon discharge or transfer since such information is clearly necessary medical information and should be transferred with the patient. As for all requirements in this regulation, further implementation guidance will be provided. Furthermore, we believe that providing pertinent information such as specialized assessments and information regarding DME needs is a valuable piece of necessary medical information. We also expect that hospitals are providing any necessary requested information to follow up providers.

Comment: One commenter stated that the discharge instructions should be provided to HHAs prior to or at the time of discharge when the patient is referred to home health services following discharge to home from the hospital. The commenter also suggested that in cases in which the patient was receiving home health services prior to the current hospitalization, hospitals should be required to maintain ongoing communications with the HHA. The commenter believes that the HHA that was providing services to the patient prior to the current hospital admission should continue to be the patient's PAC provider should the patient be referred for home health services following the current inpatient admission if the patient chooses.

Response: While we have revised and relocated some of the proposed requirements in this final rule, we have essentially retained (with some clarifying modifications as well as the addition of some important elements of the proposed requirements for this section) the current requirement that the hospital must transfer or refer the patient, along with his or her necessary medical information, to appropriate facilities, agencies, or outpatient services, as needed, for follow-up or ancillary care upon discharge. We are finalizing the requirement as standard (b) ''Discharge of the patient and provision and transmission of the patient's necessary medical information,'' will require the hospital (or the CAH) to discharge the patient, and also transfer or refer the patient where applicable, along with all necessary medical information pertaining to the patient's current course of illness and treatment, post-discharge goals of care, and treatment preferences, at the time of discharge, to the appropriate post-acute care service providers and suppliers, facilities, agencies, and other outpatient service providers and practitioners responsible for the patient's follow-up or ancillary care.

In this final rule, the patient must be referred to a Medicare-participating HHA that serves the geographic area (as defined by the HHA) in which the patient resides. It is expected that the patient be referred to an HHA that can meet the clinical needs of the patient as indicated in the patient's discharge plan. If the patient was receiving home health services prior to the current hospital admission and the patient is referred for home health services following their discharge from the current admission, we expect that the patient be given the option to continue to receive services from the same HHA if they so choose so long as the HHA is still appropriate to meet the needs of the patient and the HHA still meets the requirements under proposed § 482.43(f)(1) (finalized here as § 482.43(c)(1)). We do not believe that we should require a patient to maintain a relationship with a provider if the patient wishes otherwise.

Comment: One commenter suggested that we develop a policy that would facilitate improved payer-provider collaboration and coordination with the discharge planning process so that managed care companies are also held to these same requirements.

Response: This comment pertains to the oversight of managed care organizations rather than to any specific proposed changes to the discharge planning policy proposals set forth in the Discharge Planning proposed rule. The comment is therefore outside the scope of this final rule.

Comment: One commenter questioned if there should be a requirement for the hospital to use reasonable efforts to determine the identity of the practitioner(s) responsible for the follow-up care of the patient being discharged to home, and to communicate with that practitioner.

Response: We expect that hospitals are already using reasonable efforts to determine who the practitioner(s) responsible for the follow-up care of the patient is and, in many cases, hospitals are scheduling the follow-up appointments for those patients who are being discharged to home. Most hospitals have discharge policies in place that include assigning patients to one of their physicians who see outpatients—either on staff or who have privileges at that hospital, if the patient does not have a primary care physician or an appropriate practitioner who is responsible for the follow-up care of the patient. Thus, we expect hospitals will have processes in place to routinely and consistently identify a follow up practitioner for every patient discharged.

Comment: While commenters supported the goals of a post-discharge follow-up process, some commenters noted that the evidence is still being developed on how best to do this and disagreed that all patients would even require post-discharge follow-up.

Response: While we continue to believe that a post-discharge follow-up process has value for certain patients, for the reasons we gave in the proposed rule (80 FR 68135), we have decided to remove this requirement from this final

rule since we believe that most hospitals are already doing this according to their specific situations and patient populations, and patient risk levels. We note the importance of ensuring that hospitals follow-up, post-discharge, with their most vulnerable patients, including those with behavioral health conditions. As a result, we encourage hospitals to research evidenced-based best practices and determine and implement a process that best meets the needs of their patient population. It should be noted that CMS continues to use other levers at its disposal, which are separate from the regulatory ones in the CoPs discussed here, to encourage reductions in the number of unnecessary readmissions and to improve post-discharge patient outcomes. This emphasis on reducing preventable readmissions, especially for the most vulnerable patient populations, remains a high priority for CMS.

Comment: Several commenters requested that we investigate payment models that will support the hospital's establishment of a post-discharge follow-up process for patients discharged to home. One commenter stated that health plans should be responsible for following up with their enrollees after a hospital discharge.

Response: These comments do not pertain to any specific proposed changes to the discharge planning policy proposals, and therefore are outside the scope of this final rule.

Final Decision: After consideration of the public comments we received on the proposed rule, we are not finalizing § 482.43(d). We are redesignating the proposed requirement in § 482.43(d)(3) as § 482.43(b), and we are eliminating the specific timeframe requirements to require that hospitals discharge the patient, and also transfer or refer the patient where applicable, along with all necessary medical information pertaining to the patient's current course of illness and treatment, post-discharge goals of care, and treatment preferences, at the time of discharge, to the practitioners responsible for the patient's follow-up or ancillary care.

7. Transfer of Patients to Another Health Care Facility (Proposed § 482.43(e))

We proposed to re-designate and revise the current standard at § 482.43(d) as § 482.43(e), ''Transfer of patients to another health care facility,'' by clarifying our expectations of the discharge and transfer of patients. We would continue to require that all hospitals communicate necessary information of patients who are discharged with transfer to another facility. The receiving facility may be another hospital (including an inpatient psychiatric hospital or a CAH) or a PAC facility. Therefore, we proposed, at the minimum, the following information to be provided to a receiving facility:

- Demographic information, including but not limited to name, sex, date of birth, race, ethnicity, and preferred language;
- Contact information for the practitioner responsible for the care of the patient and the patient's caregiver/support person(s);
- Advance directives, if applicable;
- Course of illness/treatment;
- Procedures;
- Diagnoses;
- Laboratory tests and the results of pertinent laboratory and other diagnostic testing;
- Consultation results;
- Functional status assessment;
- Psychosocial assessment, including cognitive status;
- Social supports;
- Behavioral health issues;
- Reconciliation of all discharge medications with the patient's pre-hospital admission/registration medications (both prescribed and over-the-counter);
- All known allergies, including medication allergies;
- Immunizations;
- Smoking status;
- Vital signs;
- Unique device identifier(s) for a patient's implantable device(s), if any;
- All special instructions or precautions for ongoing care, as appropriate;
- Patient's goals and treatment preferences; and
- All other necessary information to ensure a safe and effective transition of care that supports the post-discharge goals for the patient.

In addition to these proposed minimum elements, we proposed that necessary information must also include a copy of the patient's discharge instructions, the discharge summary, and any other documentation that would ensure a safe and effective transition of care, as applicable. We also proposed to require hospitals provide this information at the time of the patient's discharge and transfer to the receiving facility.

Comment: We received numerous comments regarding the requirement for hospitals and CAHs to provide specific information to a receiving facility during a transfer. While some commenters supported the proposed list of elements and offered suggestions for additional elements, most commenters believed that the list of required necessary medical information was overly prescriptive, excessively extensive, time consuming, duplicative, and burdensome. Some commenters stated that the extensive list would not improve the transition of patient care. Commenters suggested that the list be pared down or eliminated in favor of a clinical summary of a patient's hospitalization. Commenters recommended that specific information be determined by hospitals or CAHs and that only essential information be sent with the patient in the case of a transfer. One commenter recommended that CMS provide additional information on what constitutes sufficient information regarding certain medical information elements specified in the proposed rule including: Functional status, advance care plans, transportation needs, and risk assessment. Another commenter recommended that information regarding a patient's behavioral health issues include federally required preadmission screening for persons with serious mental illnesses or mental disabilities, as required for Medicaid Nursing home patients in section 1919(e)(7) of the Act.

Several commenters expressed concern that the proposed requirements aligned with the Common Clinical Data Set defined in the 2015 Edition final rule and questioned the appropriateness of this alignment at this time, while other commenters supported the alignment. A few commenters had specific concerns about the inclusion of unique device identifier(s) for a patient's implantable device on the list of necessary medical information. While the commenters note their support of the use of the unique device identifier, they note that the required use at this moment is premature.

Response: We continue to strive to promote successful transitions of care between health care settings and believe that the transition of the patient from one environment to another should occur in a way that promotes efficiency and patient safety through the communication of necessary information between the hospital and the receiving facility. Doing so will improve patient safety and potentially reduce hospital readmissions. Most providers recognize the importance of improving transitions of care between health care settings and several states and organizations have begun to develop, use, and recommend continuity of care documents or universal transfer forms. The American Medical Directors Association has developed and recommends the use of a universal transfer form. Additionally, other tools and information are available from CMS (*http://innovation.cms.gov/*

initiatives/CCTP/index.html) and AHRQ as well as through a number of professional organizations, including the National Transitions of Care Coalition (*www.ntocc.org*). We refer readers specifically to the following information provided by AHRQ regarding care transitions:

- *https://www.ahrq.gov/professionals/systems/hospital/engagingfamilies/strategy4/index.html.*
- *https://innovations.ahrq.gov/qualitytools/care-transitions-program-toolkit.*
- *https://caretransitions.org/tools-and-resources/.*
- *https://www.ahrq.gov/professionals/systems/hospital/red/toolkit/index.html.*

Therefore, we continue to believe that hospitals and CAHs should be required to send certain necessary medical information to a receiving facility upon a patient's transfer. However, we agree with commenters that mandating the various data elements listed in the proposed requirement may be burdensome to providers and may have the unintended effect of hindering a patient's discharge. However, while we are not requiring an extensive list of items as originally proposed, we still expect facilities to send certain necessary medical information that is critical to the care of the patient and pertinent to the patient's specific medical status at the time of discharge. We also believe facilities should have discretion to send the most relevant information within the required necessary medical information, consistent with ''clinical relevance'' as defined in the Medicare and Medicaid Electronic Health Record Incentive Program final rule (80 FR 62761, October 16, 2015) (''2015 Meaningful Use Rule''). Other important and pertinent information that should be conveyed at discharge or transfer would be current diagnoses (including any behavioral health issues of mental health and substance abuse), laboratory results (including *Clostridium difficile* and multi-drug resistant organism status, as well as any antibiotic susceptibility testing, as applicable), and patient functional status, to name just a few broad areas of medical information that we believe are critical to patient care.

Therefore, we are revising and relocating our proposed requirement from § 482.43(e) to § 482.43(b) in this final rule to require that a hospital must discharge the patient, and also transfer or refer the patient where applicable, along with all necessary medical information pertaining to the patient's current course of illness and treatment, post-discharge goals of care, and treatment preferences, at the time of discharge, to the appropriate post-acute care service providers and suppliers, facilities, agencies, and other outpatient service providers and practitioners responsible for the patient's follow-up or ancillary care.

This modification aligns with our goals to promulgate CoPs that contain baseline requirements for providers that protect the patient's health and safety while allowing for provider flexibility and reducing unnecessary provider burden. While we continue to believe that much of the information we proposed should be exchanged for patients to whom it applies, as well as many of the additional suggestions we received, we are requiring a less prescriptive and more flexible set of requirements. We understand that the information required may vary based on the circumstances of a patient's discharge to home or transfer to another health care facility, including the urgency of the transfer.

We note that providers can and should send all additional medical information pertaining to the patient's current course of illness and treatment, post-discharge goals of care, and treatment preferences. In addition, we expect that certain information, including a patient's goals and treatment preferences, be included in the patient's discharge or transfer summary and any other relevant documentation.

We plan to issue sub-regulatory guidance that will discuss the circumstances of when a discharge or transfer summary would be expected at the time of discharge (and transfer if applicable), as in a discharge to home and community-based services (or a transfer to a PAC services facility such as a SNF), versus when it would not be appropriate to delay an emergency transfer as a result of waiting on the availability of a discharge summary. From our experiences with hospital and CAHs, we are also aware that there are instances when the discharge or transfer summary is delayed in being sent by the hospital or CAH due to the lack of a signature at the time of discharge by the practitioner responsible for the care of the patient. We note here that neither the current CoPs nor the revisions finalized in this rule prohibit hospitals and CAHs from sending an interim discharge or transfer summary document that would include the required necessary medical information to the appropriate post-acute care service providers and suppliers, facilities, agencies, and other outpatient service providers and practitioners responsible for the patient's follow-up or ancillary care so that such information can be shared timely, so that the discharge and/or transfer is not further delayed, and so that those facilities and practitioners responsible for the patient's follow-up or ancillary care are provided sufficient and necessary information and time to prepare to receive the patient. We would expect that a finalized document, even if not significantly different from the interim one, would follow the patient. Such practices are not only allowed under the CoPs, but also can be seen as constituting ''best practices'' for ensuring effective continuity of care for the patient transitioning from one care setting to another.

Additionally, we would also like to point out that in those hospitals and CAHs where there are multiple licensed and qualified practitioners responsible for the care of the same patient, delay of the discharge, and transfer or referral where applicable, of the patient, along with his or her necessary medical information, should not occur as a result of ''waiting'' for a specific provider's signature, either written or electronic, on the discharge order and the discharge or transfer summary for the patient. The CoPs allow for orders and other forms of patient medical record information (for example, H&Ps, progress notes, discharge/transfer summaries, etc.) to be documented and signed by a licensed and qualified practitioner who is responsible for the patient as long as the practitioner is acting in accordance with all state and local laws, including scope-of-practice laws, as well as with all hospital and medical staff requirements and bylaws, and with any individual privileges granted to the practitioner by the governing body.

While we have increased the flexibility in these requirements, we continue to support the alignment discussed in the proposed rule between this approach and the Common Clinical Data Set, which health care providers are electronically exchanging through the use of certified EHR technology (80 FR 62693). We encourage facilities to identify opportunities to streamline data collection and exchange by using data they are already capturing electronically. While we are finalizing a broad requirement for sending necessary medical information, rather than listing data elements, such as those explicitly aligned with the data referenced as part of the Common Clinical Data Set (CCDS) that was finalized in the 2015 Edition final rule (80 FR 62858), eligible hospitals and CAHs in the Promoting Interoperability Program are required under 42 CFR 495.4 to use EHR technology certified to the 2015 Edition

health IT certification criteria beginning in CY 2019 and are therefore required to provide the elements in the CCDS as part of a summary of care record (81 FR 77555). We note that by finalizing the requirement to release certain medical information in this final rule in accordance with all applicable laws, we are ensuring that the CoPs do not conflict with the CCDS. The CoPs do not bar providers from sending all additional appropriate medical information regarding the patient's current course of illness and treatment, post-discharge goals of care, and treatment preferences in accordance with applicable laws. We expect that certain information, including a patient's goals and treatment preferences, would be included in the patient's discharge summary and any other relevant documentation. As we note above, we plan to issue further sub-regulatory guidance that will discuss the circumstances of when a discharge summary or transfer summary would be expected at the time of discharge (and transfer if applicable). Furthermore, the interpretive guidelines for requirements in this final rule will be released sometime following the publication of this final rule, which will provide additional information regarding alignment with the CCDS, where applicable.

Providers must continue to comply with all pertinent laws, including the HIPAA Privacy Rule and the behavioral health privacy regulations referenced by the commenter, as they implement these discharge planning requirements. Finally, we generally consider the exchange of information between facilities using an EHR system the same as ''sending'' information from one facility to another, except under those circumstances when we explicitly require use of a physical record. In fact, we expect that facilities, which are already electronically capturing patient health care information, are also electronically sharing that information with providers that have the capacity to receive it to the extent such release is permitted under HIPAA.

Comment: One commenter recommended that CMS encourage, but not require, hospitals to send the discharge or transfer summary to PACs as far in advance as possible, while another commenter recommended that CMS make this a requirement. In addition, the commenter recommended that CMS mandate that the referring facility ensure that the receiving facility has received the information.

Response: We agree that there are benefits to sending necessary medical information to post-acute care services providers as far in advance as possible and encourage hospitals to do so. However, we do not agree that this should be a requirement for all hospitals and CAHs. We also note that we are not requiring hospitals and CAHs to ensure that the receiving facility has received the information on a patient's discharge because such a requirement would be overly burdensome.

Comment: A few commenters recommended that CMS delineate specific methods of communicating necessary medical information between the hospital and the PAC provider at the time of discharge. The commenters noted that designating a specific method will allow for seamless transmittal of data between settings

Response: We are not requiring that hospitals and CAHs transmit necessary medical information in a specific manner at this time. However, we believe that it is absolutely important for PAC providers to receive information from hospitals and CAHs regarding a patient's vital and pertinent information, and we encourage hospitals and CAHs to send the information prior to discharge if at all possible and make the necessary revisions to allow for this as described previously. Furthermore, we encourage hospitals and CAHs to send this necessary medical information electronically, if the PAC provider has the capacity to receive it in this manner.

Comment: One commenter requested that CMS create an exception for real time discharge summaries for transfers from acute care to SNF facilities. The commenter noted that while it is essential to know a patient's medical and treatment history, the discharge summary requirement does not make sense if information is being sent when the transfer is from the ''doctor to him or herself'' and from the ''nurse to the same nurse.'' The commenter further pointed out that this may be an issue in rural communities, where the practitioners are the same on either side of the transfer.

Response: We understand the commenter's concerns about a repetitive or time consuming process for rural or small hospitals or CAHs, particularly when the services being provided to the patient changes from acute inpatient to swing bed. We note that the discharge planning process does apply to patients whose status changes from acute inpatient to swing bed services.

Final Decision: After consideration of the comments we received on the proposed rule, we are finalizing § 482.43(e) with modifications. We are revising and redesignating § 482.43(e)(2) as follows:

- Removing proposed § 482.43(c), (d), and (e) and replacing these standards with revised and redesignated § 482.43(b), entitled ''Discharge and transfer of the patient and provision and transmission of the patient's necessary medical information.'' The final standard at § 482.43(b) incorporates and combines revised provisions from the proposed requirements at § 482.43(c), (d), and (e).

8. Requirements for Post-Acute Care (PAC) Services (Proposed § 482.43(f))

We proposed to re-designate and revise the requirements of current § 482.43(c)(6) through (8) at new § 482.43(f), Requirements for PAC services. The proposed standard is based in part on specific statutory requirements located at sections 1861(ee)(2)(H) and 1861(ee)(3) of the Act. We proposed to further clarify that the PAC providers mentioned in the IMPACT Act, specifically LTCHs and IRFs (rehabilitation hospitals and rehabilitation units of hospitals and CAHs), would also be subject to the proposed revision to the hospital CoPs in order to provide consistency with the IMPACT Act. We proposed that for patients who are enrolled in Managed Care Organizations (MCOs), the hospital must make the patient aware that the patient or caregiver needs to verify the participation of HHAs or SNFs in their network. If the hospital has information regarding which providers participate in the managed care organization's network, it must share this information with the patient and must document in the patient's medical record that the list was presented to the patient. The patient or their caregiver/support persons must be informed of the patient's freedom to choose among providers and to have their expressed wishes respected, whenever possible. The final component of the retained provision would be the hospital's disclosure of any financial interest in the referred HHA or SNF. However, this section would be revised to include IRFs and LTCHs.

Comment: One commenter suggested that we require hospitals to communicate the capabilities and limitations of PAC facilities to the patient to ensure the patient receives the appropriate level of care as indicated in their discharge plan. The commenter further suggested that certain additional elements be considered, including limitations of the facility's number of RNs, Certified Rehabilitation Registered Nurse (CRRNs), physician availability, amount of therapy, and access to emergency services.

Response: We understand that the commenter is concerned about meaningful and successful transitions of care between the hospital and PAC settings. However, we do not believe it is appropriate to add language requiring hospitals to communicate the capabilities and limitation of PAC facilities to the patient and/or their caregivers, as this would be duplicative of the requirement at proposed § 482.43(c)(8), now finalized at § 482.43(a)(8). We believe this requirement for sharing and using PAC data with patients sufficiently addresses the commenter's concerns.

Comment: Several commenters requested that we design a process or tool to allow for rapid identification of appropriate PAC organizations, including those that are in the patient's managed care network, to speed up the discharge process. One commenter recommended that CMS require insurance companies to have an updated list of providers and rating qualities and cost efficiency data so that providers can refer patients to their insurance companies for this information. One commenter stated that obtaining a list of Medicare-certified providers was challenging and that information regarding the providers was not always up to date.

Response: We would allow a hospital the flexibility to implement the requirement to present its list of HHAs, SNFs, IRFs, or LTCHs in a manner that is most efficient and least burdensome in its particular setting. For HHA, SNF, and dialysis services, a hospital can access a list from the CMS website, at *http://www.medicare.gov,* or develop and maintain its own list of HHAs and SNFs. We expect that providers have the most current list of providers that is available to them at the time. When the patient requires home health services, the CMS website list can be accessed based on the geographic area in which the patient resides. When the patient requires post hospital extended care services, the CMS website list would be accessed based on the geographic area requested by the patient. Or, in the rare instance when a hospital does not have internet access, the hospital can call 1–800–MEDICARE (1–800–633–4227) to request a printout of a list of HHAs or SNFs in the desired geographic area. Information on this website should not be construed as an endorsement or advertisement for any particular HHA or SNF. For IRFs and LTCHs, we expect that hospitals maintain a list of their own, based on geographic location of the facilities. If a hospital chooses to develop its own list of HHAs, SNFs, IRFs, and LTCHs, the hospital would have the flexibility of designing the format of the list. However, the list should be utilized neither as a recommendation nor endorsement by the hospital of the quality of care of any particular HHA, SNF, IRF, or LTCH. If an HHA, SNF, IRF, or LTCH does not meet all of the criteria for inclusion on the list (Medicare-certified and is located in the geographic area in which the patient resides or in the geographic area requested by the patient), we do not require the hospital to place the entity on the list. We expect that hospitals share their data sources with the patients or the patient's representatives and explain the meaning of the data as they are presented to them.

Except as specified by statute, CMS lacks the authority to require insurers, health plans, or plan sponsors to meet CMS's regulatory requirements. Because the discharge planning requirements have no provisions regarding health plans, health insurers, or plan sponsors, comments related to potential requirements for insurers are outside the scope of this final rule.

Comment: Numerous commenters made suggestions regarding the list of PAC providers that must be provided to patients. One commenter stated that we should require that the list of PAC providers given to patients include all available PAC providers, as a means to eliminate potential bias in favor of PAC providers who may have a close relationship with the hospital. Several commenters expressed concern with the requirement that HHAs must request to be listed by the hospitals as available, as this is seen as limiting the options presented to patients. One commenter stated that it is common practice for hospitals to first require PAC providers to indicate they will accept a particular patient in order to be included in the list of PAC providers that is presented to the patient. The commenter states that hospitals frequently present to the patient only the PAC providers that responded favorably within a given timeframe that they will accept the patient, even if only a limited number of providers responded to the request. Commenters recommended that the regulation be modified to include hospice among the post-hospital care providers where a list of hospices is made available to the patient, along with the other protections on the patient's freedom of choice. Another commenter stated that hospitals should be required to provide lists of all providers and services available to patients upon discharge.

Response: We proposed at § 482.43(f)(1) to require hospitals include in the discharge plan, a list of HHAs, SNFs, IRFs, or LTCHs that are available to the patient, that are participating in the Medicare program, and that serve the geographic area (as defined by the HHA) in which the patient resides, or in the case of a SNF, IRF, or LTCH, in the geographic area requested by the patient. This allows the patient to identify the geographic area in which they would like the SNF, IRF, or LTCH to be located. Given that this process is patient-driven, it eliminates the risk of hospital bias in the patient's selection of one of these PAC providers. In addition, providing patients with a list of providers that responded within an allotted period of time would not assist the patient in making a decision, as it may unduly limit patient choice based on an arbitrary time deadline. While hospitals may have working relationships with some PAC providers, hospitals are expected to present patients with a list of providers that meet the proposed requirements of § 482.43(f)(1). We expect discharge planning to facilitate patient choice in any post hospital extended care services, even though the statute does not require a specific list beyond HHAs, SNFs, IRFs, and LTCHs. The proposed requirement at § 482.43(f)(2) is also important because it requires the hospital, as part of the discharge planning process, to inform the patient or the patient's representative of their freedom to choose among participating Medicare providers and suppliers of post discharge services and must, when possible, respect the patient's or the patient's representative's goals of care and treatment preferences, as well as other preferences they express. The hospital must not specify or otherwise limit the qualified providers or suppliers that are available to the patient. We do encourage hospitals to provide any information regarding PAC providers that provide services that meet the needs of the patient. Hospitals must not develop preferred lists of providers. If the hospital has information regarding a PAC provider's specialized services, we encourage that this information be provided to the patient as well as any culturally specific needs that the PAC providers are able to address (for example, the patient's foreign language needs, and their cultural dietary needs or restrictions).

Section 4321(a) of the Balanced Budget Act of 1997 (BBA) (Pub. L. 105–33), codified as 1861(ee)(2)(D) of the Act, provided that the hospital discharge planning evaluation include an evaluation of the patient's likely need for post-hospital services and the availability of those services, ''including

the availability of home health services through individuals and entities that participate in the program under this title and that serve the area in which the patient resides and that request to be listed by the hospital as available.'' We have interpreted this provision to require that hospitals need only indicate the availability of home health services provided by HHAs that request to be listed in the discharge plan, as opposed to the universe of individuals and entities that participate in the program. We believe that our interpretation is consistent with the BBA provision. We believe that the request to be listed protects HHAs from the possibility that a hospital or other acute care provider would misstate the HHAs service area.

Lastly, the provisions of the IMPACT Act apply to certain PAC providers only, including HHAs, SNFs, IRFs, and LTCHs. Although we proposed to modify this currently existing requirement to include IRFs and LTCHs, in order to be consistent with the provisions of the IMPACT Act, we expect the discharge planner to facilitate patient choice in any post hospital extended care services as part of the discharge planning process.

Comment: One commenter stated that it would be helpful if patients and their caregivers were provided information regarding the out-of-pocket costs for the different PAC providers.

Response: This comment does not pertain to any specific proposed changes to the discharge planning policy proposals set forth in the Discharge Planning proposed rule. Calculating out-of-pocket costs for beneficiaries is outside the scope of this rulemaking.

Comment: One commenter stated that hospitals should be required to document the actual list of post-acute care referrals presented to the patient as a means for surveyors to determine the adequacy of the post-discharge options presented to the patient.

Response: We agree with the need to ensure that surveyors appropriately determine that hospitals are providing patients referred to HHAs, SNFs, IRFs, or LTCHs a list of providers that contains appropriate and sufficient options in accordance with this requirement. We think it is important to allow hospitals the flexibility to determine the manner in which they document in the patient's medical record that the list of PAC providers was presented to the patient or to the patient's representative. We expect that surveyors will ask to see this documentation as part of the survey process.

Comment: Most commenters agreed with the proposal to require that hospitals provide patients with information on which practitioners, providers or certified supplies are in the network of the patient's managed care organization if the hospital has this information. Several commenters stated that information regarding providers and suppliers within a patient's managed care network was not readily available. Commenters also stated that confirming a patient's managed care network is the responsibility of the patient and to some extent the responsibility of the patient's health plan. Commenters found that it is reasonable for hospitals to use limited resources to assist certain patient populations with obtaining the patient's managed care network information and connecting with their managed care network such as those who naturally have difficulty navigating the healthcare system (such as those with behavioral health conditions or limited English proficiency). In addition, commenters stated that requiring hospitals to obtain and share this information is labor-intensive and recommend that we require PAC providers to disclose their managed care network to the hospital upon being contacted for patient referrals.

Response: We proposed that hospitals be required to make the patient aware that the patient or caregiver needs to verify the participation of HHAs or SNFs in their network. If the hospital has information regarding which providers participate in the managed care organization's network, it must share this information with the patient; however, the hospital is not expected to have the latest information, as only the MCO would have this information. While we understand that in some cases, information regarding a patient's managed care network is not available to the hospital, we encourage the hospital to make a reasonable effort to obtain this information regarding a particular post-acute care provider, especially if requested by the patient or for vulnerable patient populations as identified by the hospital in the hospital's discharge planning policy. It should also be noted that we encourage hospitals to work collaboratively with insurance companies to ensure that the hospital has up-to-date information; this requirement is not intended to be an unreasonable burden on hospitals, but merely another factor in helping patients select the right post acute facility for them. While obtaining this information may be burdensome to the hospital in cases when it is not readily available, doing so is in the best interest of the patient so that the patient is able to obtain the referred post-acute care services. If the patient wishes to receive services from an in-network PAC provider, but there are none available in the patient's geographic area or the area requested by the patient, we encourage the hospital to assist the patient or the patient's representative in identifying in-network PAC providers that are able to provide services to the patient. We expect the hospital to address in its discharge planning policy cases in which there are no PAC providers within a patient's managed care network, to the extent that this information is known.

The hospital is required to provide patients with a list of PAC providers that serve the geographic area in which the patient resides, or in the case of SNFs, IRFs, and LTCHs, in the geographic area requested by the patient, and to inform the patient which providers are in the patient's managed care network to the extent that the hospital has this information, as previously described. In this way, patients will be provided with a complete list of PAC providers and the information available on which of these providers are in their managed care network. The hospital has the flexibility to determine the manner in which it meets the requirement to inform the patient. It should be noted that there may be cases in which the patient selects a post-acute care provider that is not in their managed care network (for example, if the patient is paying out of pocket for the post-acute care services). Requiring PAC providers to disclose their managed care network to the hospital upon being contacted for patient referrals is outside of the scope of this rulemaking; however, we do encourage hospitals to work with the PAC providers in their geographic area to develop a system that will allow hospitals to efficiently identify whether a listed post-acute care provider is part of the patient's managed care network.

In addition, there may be cases in which post-acute care services are not recommended, but the patient wishes to obtain these services and cover the costs out of pocket. In these cases, we expect that the hospital will provide a list of PAC providers that are available to provide the services requested by the patient.

Additional information regarding enforcement of this requirement will be provided in the interpretive guidelines.

Comment: One commenter stated that providing a list of PAC providers to parents or patient representatives of pediatric patients is inappropriate for

use in identifying care for the pediatric population. The commenter stated that there are a limited number of PAC providers that treat this population.

Response: We would not expect hospitals to provide patients or their representative with a list of PAC providers that do not provide services that will meet the needs of the patients. For example, we would not expect that a pediatric patient who is being discharged from the hospital and referred for home health services would be presented a list of HHAs that do not provide services to pediatric patients.

Comment: Several commenters requested that we implement further requirements that specifically address delays in the discharge process for patients being referred for post-acute care services related to authorization for services, timely acceptance of patients by the PAC provider, and current payer contracts. Commenters stated that there are sometimes significant delays in the discharge process for patients referred for post-acute care services as a result of timely process for authorization for services for which preauthorization is often required. Commenters also stated that hospitals have little control over the time it takes for PAC providers to accept patients once they have been notified of the need for services. One commenter submitted a question regarding a scenario where a patient is ready for discharge and a bed is available at a Medicare sub-acute rehabilitation facility in the geographic area of the patient's choice. The commenters also asked if the patient chooses a higher rated sub-acute rehab facility that does not have a bed available, can the hospital issue a Hospital-Issued Notice of Noncoverage (HINN–12) to the patient.

Response: One of the goals of this rule is to prevent any undue delays in the patient discharge process. We understand that delays in the discharge process will still occur for patients for factors that are beyond the hospital's control. In such cases, any delays in the discharge process will not be attributed to the hospital.

The comments regarding the management and oversight of managed care networks and the current payer contracts and those regarding notices of noncoverage do not pertain to any specific proposed changes to the discharge planning policy proposals set forth in the Discharge Planning proposed rule. These matters are outside the scope of this rulemaking.

Comment: Commenters supported the proposal to require the discharge plan to identify any HHA or SNF to which the patient is referred in which the hospital has disclosable financial interest. Commenters requested that we discuss what level of disclosure must be provided and offer some standard language for providers' use. One commenter asserted that a beneficiary may give priority during the discharge planning process to a provider or supplier related financially to the hospital if he or she had a good experience with the discharging hospital. The commenter recognized that, unless an exception applies and its requirements are satisfied, section 1877 of the Act (the physician self-referral law) prohibits referrals of designated health services by physicians who have financial relationships with entities that furnish such services. Because many post-acute providers and suppliers furnish designated health services (which include home health services, physical therapy services, occupational therapy services, and speech language pathology services, among others), the commenter recommended CMS consider providing guidance to hospitals regarding how to conduct discharge planning activities required under the CoPs in compliance with the physician self-referral law. As an example, the commenter noted the need for hospital discharge planning staff to be aware of both the hospital's financial interest in an HHA to which a patient is being referred, as well as whether the ordering physician has a financial relationship with the home health agency that implicates the physician self-referral law.

Response: We appreciate the support for the proposed regulations. If a hospital referred patients about to be discharged and in need of post-hospital services only to entities it owned or controlled, the hospital should disclose this information so the patient has all of the information needed to choose the facility he or she would like to visit for services. The proposed disclosable financial interest requirement is an effort to increase the beneficiary's awareness of the actual or potential financial incentives for a hospital as a result of the referral. To allow hospitals the flexibility of determining how these financial interests are disclosed to the patient, we did not propose to require a specific form or manner in which the hospital must disclose financial interest. The hospital could simply highlight or otherwise identify those entities in which a financial interest exists directly on the HHA and SNF lists or the hospital could choose to maintain a separate list of those entities in which a financial interest exists.

We provide guidance regarding the physician self-referral law on the CMS website at *https://www.cms.gov/Medicare/Fraud-and-Abuse/PhysicianSelfReferral/index.html?redirect=/PhysicianSelfReferral/.* Outside of the advisory opinion process described at §§ 411.370 through 411.389, we are unable to provide specific guidance regarding the compliance with the physician self-referral law of any particular hospital, post-acute provider or supplier, or referring physician.

Final Decision: After consideration of the comments we received on the Discharge Planning proposed rule, we are finalizing proposed § 482.43(f) at § 482.43(c) without modification.

F. Home Health Agency Discharge Planning (Proposed § 484.58)

Under the authority of sections 1861(m), 1861(o), and 1891 of the Act, the Secretary has established in regulations the requirements that a HHA must meet to participate in the Medicare program. Home health services are covered for qualifying beneficiaries who are entitled to benefits under the Hospital Insurance (Medicare Part A) and/or Supplementary Medical Insurance (Medicare Part B) programs. These services include skilled nursing care; physical, occupational, and speech therapy; medical social work; and home health aide services. Such services must be furnished by, or under arrangement with, an HHA that participates in the Medicare program and must be provided in the beneficiary's home.

The current regulations at § 484.110 require HHAs to provide a copy of the discharge summary to the follow-up care provider. We proposed to update the discharge summary requirements by requiring that HHAs better prepare patients and their caregiver(s) to be active participants in self-care and by implementing requirements that would improve patient transitions from one care environment to another, while maintaining continuity in the patient's plan of care. In § 484.58, we proposed to require that HHAs develop and implement an effective discharge planning process that focuses on the following:

- Preparation of patients and caregivers to be active partners in post-discharge care;
- effective transition of the patient from HHA to post-HHA care; and
- the reduction of factors leading to preventable readmissions.

In the Discharge Planning proposed rule (80 FR 68137), we also addressed the content and timing requirements for the discharge or transfer summary for HHAs. These proposed changes incorporated the requirements of the IMPACT Act. In addition, we solicited

comments on the timeline for HHA implementation of the proposed discharge planning requirements. We discuss the comments we received in response to this solicitation of comments in section II.B of this final rule.

1. Discharge Planning Process (Proposed § 484.58(a))

We proposed to establish a new standard, ''Discharge planning process,'' to require that the HHA's discharge planning process ensure that the discharge goals, preferences, and needs of each patient are identified and result in the development of a discharge plan for each patient. In addition, we proposed to require that the HHA discharge planning process require the regular re-evaluation of patients to identify changes that require modification of the discharge plan, in accordance with the provisions for updating the patient assessment at current § 484.55. The discharge plan would be updated, as needed, to reflect these changes.

Proposed § 484.58(a)(1) Through (7)

We proposed at § 484.58(a)(1) to require that the discharge planning process include re-evaluation of patients to identify changes that require modification of the discharge plan, in accordance with the timeframes for updating the patient assessment as set forth at § 484.55. We proposed that the discharge plan would be updated, as needed, to reflect these changes. We proposed at § 484.58(a)(2) to require that the physician responsible for the home health plan of care be involved in the ongoing process of establishing the discharge plan. We proposed at § 484.58(a)(3) to require that the HHA consider the availability of caregivers for each patient, and the patient's or caregiver's capacity and capability to perform required care, as part of the identification of discharge needs. We proposed at § 484.58(a)(4) to require that the patient and caregiver(s) must be involved in the development of the discharge plan, and informed of the final plan. Furthermore, in order to incorporate patients and their families in the discharge planning process, we proposed at § 484.58(a)(5) to require that the discharge plan address the patient's goals of care and treatment preferences.

For those patients who are transferred to another HHA or who are discharged to a SNF, IRF, or LTCH, we proposed at § 484.58(a)(6) to require that the HHA assist patients and their caregivers in selecting a PAC provider by using and sharing data that includes, but is not limited to, HHA, SNF, IRF, or LTCH data on quality measures and data on resource use measures.

As required by the IMPACT Act, HHAs must take into account data on quality measures and resource use measures during the discharge planning process. We also proposed at § 484.58(a)(6) that HHAs provide data on quality measures and resource use measures to the patient and caregiver that are relevant to the patient's goals of care and treatment preferences. We received many public comments on these proposed requirements for HHAs and we refer readers to section II.F of this final rule for a summary of those comments and our responses.

In addition, we proposed at § 484.58(a)(7) to require that the evaluation of the patient's discharge needs and discharge plan be documented and completed on a timely basis, based on the patient's goals, preferences, and needs, so that appropriate arrangements are made prior to discharge or transfer. We also proposed to require that the evaluation be included in the clinical record. We proposed that the results of the evaluation be discussed with the patient or patient's representative. Furthermore, all relevant patient information available to or generated by the HHA itself must be incorporated into the discharge plan to facilitate its implementation and to avoid unnecessary delays in the patient's discharge or transfer.

Comment: Several commenters strongly supported the proposed requirements at § 484.58, ''Discharge Planning.'' Commenters stated that these new requirements put patients and their needs at the center of the discharge process. They also stated that standardization would improve the process of transitioning between care settings, reduce patient confusion, and improve compliance with discharge instructions. Additionally, other commenters were pleased to see the requirement to ensure that the discharge goals, preferences, and needs of each patient are identified. Other commenters requested specific clarifications of potentially ambiguous terms, such as ''active partner,'' ''preventable readmissions,'' and ''effective transfers.'' However, many commenters expressed concern regarding the burdens that would be imposed upon HHAs, should the proposed requirements become final, particularly because they believe there is no evidence that engaging in the extensive discharge process that we proposed would improve patient safety, HHA-physician communications, or post-HHA care delivery. The proposed role of the physician in discharge planning was of particular concern to many commenters. Some commenters supported the idea of involving the physician, but stated that they believed that in most instances the HHA would be in a better position to develop the patient's discharge plan because physicians are not always familiar with the community resources available in the communities that serve their patient. Commenters requested flexibility in the degree of physician involvement in establishing the discharge plan of care. In addition, many commenters did not support the proposed requirements. Commenters stated that if the provision were finalized as proposed, it would require a substantial amount of communication time for both HHAs and physicians, imposing significant burden upon both entities. HHAs voiced concern with the involvement of primary care physicians, whom they believe are often difficult to contact, and whom they believe do not want to be involved with a patient's home health care if ordered by a different physician. Commenters recommended that only a discharge order from the primary care physician be required, and that the physician should receive a copy of the discharge summary to follow-up with the patient as appropriate. Another commenter suggested that the proposed language be modified to allow physician discretion as to their involvement in the discharge planning process. Additionally, a commenter suggested that with the increasing number of ''patient-centered medical home'' situations, the person most suitable to be involved in the home health discharge planning would not be a physician, but rather a case manager, care coordinator or mid-level provider working under the overall direction of a physician.

Response: While we appreciate the support for this proposed requirement, we are sensitive to the burden and practicality concerns raised by commenters. It was not our intent to impose a process that may not align with current HHA processes or may be otherwise unduly burdensome. It was also not our intent to potentially strain HHA-physician relationships. We agree that this issue warrants further study and a better developed evidence base before we proceed further with rulemaking. We also agree that the proposed terminology lacked clarity in a manner that could make surveying for compliance difficult and potentially inconsistent.

Additionally, many of the areas addressed in the proposed HHA discharge planning requirements were

subsequently addressed in a January 13, 2017 final rule in the **Federal Register**, titled ''Medicare and Medicaid Program: Conditions of Participation for Home Health Agencies'' (82 FR 4504), referred hereinafter as ''HHA CoP final rule'', creating concerns regarding potential regulatory duplications that should be avoided. For example, the final HHA CoP final rule requires HHAs to communicate with all relevant parties, including physicians who are involved in the patient's HHA plan of care, whenever there are revisions related to the plan for patient discharge (§ 484.60(c)(3)(ii)). We believe that this requirement, which was put into place following publication of the Discharge Planning proposed rule, accomplishes the goal of HHA-physician communication regarding discharge. As such, we believe that this separate discharge planning requirement is no longer necessary, and we are withdrawing the proposal at § 484.58(a)(2) to require that the physician responsible for the home health plan of care be involved in the ongoing process of establishing the discharge plan. We are also withdrawing the majority of the other general discharge planning requirements proposed in § 484.58(a), with the exception of those IMPACT Act requirements set forth in proposed paragraph (a)(6). We are committed to working with stakeholders to identify specific needs and concerns regarding discharge planning in the HHA care setting that may warrant future efforts, and to explore all options for achieving positive patient outcomes.

Comment: Commenters supported CMS's proposal that, for those patients who are subsequently transferred from a HHA to another HHA, SNF, IRF, or LTCH, the HHA should help patients assess the available providers.

Response: We appreciate the support for the requirement that HHAs assist patients when transferring to another post-acute care provider. We believe that recognizing patient preferences and assisting the patient with transfer options will support communication between the patient and the HHA, ultimately supporting patient informed decision making and improving patient care and satisfaction. We are finalizing this requirement as part of a more abbreviated discharge planning requirement at § 484.58(a).

Comment: A few commenters stated that the proposed rule does not adequately inform individuals of the full scope of their rights related to discharge and that the proposed regulation should present the discharge requirements in terms of patient rights. Other commenters believe CMS should have added several of the provisions under the hospital Discharge Planning proposed rules to the home health proposed requirements. Some of the additional requirements the commenter suggested include:

- Require the HHA to specify who should be involved in designing, developing and coordinating the discharge planning process; and to involve social work staff and patient and family representatives.
- Assess a family caregiver's/support person's willingness to provide care.

Response: We appreciate the comments regarding HHA patient rights as related to the discharge process. We addressed patient rights in the HHA CoP final rule, which expanded our Patient Rights CoP. We believe that this Discharge Planning final rule, when combined with the requirements located in the HHA CoP final rule, adequately addresses the patient's right to be fully involved in all aspects of care planning, including the discharge plan, to the extent that the individual patient desires. This Discharge Planning final rule sets out the obligations of the HHA to both provide information to patients for selecting additional post-acute care services, and to provide important patient care-related information to follow-up care providers. As described earlier, we are not finalizing the proposed discharge planning process requirements of § 484.58(a), with the exception for those IMPACT Act requirements set forth in proposed paragraph (a)(6). As this requirement is not being finalized, it is not appropriate to specify those disciplines that must be involved in developing the process within each HHA. With regard to the suggestion that CMS should mandate that HHAs assess a family caregiver's/support person's willingness to provide care, this issue was also addressed in the HHA CoP final rule (82 FR 4530 and 4581). In the HHA CoP final rule we implemented a new requirement that HHAs must assess a caregiver's willingness and ability to provide care as part of the comprehensive patient assessment.

Comment: Some commenters recommended that CMS require HHAs to ensure that the patient and caregiver receive discharge education and a copy of the discharge summary. Commenters also suggested that CMS should mandate the content of discharge instructions, including contact information for the receiving practitioner, information regarding follow-up appointments, medication schedule and instructions to specific care needs and treatment, and contact information for the HHA clinical manager.

Response: With regard to the suggestion that CMS should mandate what discharge instructions must include, we agree, and as part of the HHA CoP final rule, we require that HHAs provide patients with key information, such as information regarding medications and services provided, throughout the patient's duration of home health care (§ 484.60(e)). We also require at § 484.60(d)(5) that HHAs ensure that patients and caregivers receive ongoing education and training regarding the care and services identified in the plan of care. The HHA must provide training, as necessary, to ensure a timely discharge. This ongoing information to educate and engage patients in their care is designed to ensure patient activation during home health care and prepare patients for discharge by ensuring that patients and caregivers have the necessary knowledge and skills to continue performing necessary tasks after HHA discharge. In light of these requirements, we do not believe that it is necessary to duplicate requirements for discharge instructions.

Comment: A few commenters suggested that HHAs should be required to have a post discharge follow-up process when home health services end.

Response: Post discharge activities by a discharging HHA are not covered services under Medicare. As a result, CMS cannot make this a requirement; however, there is nothing to prevent the HHA from adding a post discharge follow-up process for patients as part of their own discharge process.

Comment: One commenter supported the proposal that requires HHAs to evaluate and revise a patient's discharge plan as needed, and recommended that the timeline for revisions to a discharge plan should be determined by each individual HHA. Conversely, another commenter stated that while they understood the intent behind the proposed language to revise the plan, it would not be realistic because there are many cases where the patient's condition changes quickly and dramatically without warning. According to the commenter, revising a discharge plan based on such a change, which could be temporary, would be wasteful. The commenter instead recommended requiring HHAs to cooperate with inpatient facilities requiring information about patients receiving emergency or unplanned inpatient care when contacted, or if agency personnel were aware a contact was planned or occurring.

Response: We thank the commenters for their comments on discharge planning. We agree that the proposed time frame may have been unrealistic in certain cases. Regarding the commenter's concerns of inappropriately using resources to begin discharge planning too early in the care timeline, we also believe that requiring a specific timeframe for initiating discharge planning in the HHA environment may result in an inefficient, overly burdensome regulation. Therefore, we are not finalizing the proposed requirement to update the discharge plan each time the patient assessment is updated in accordance with the requirements of § 484.55(d). We will continue to monitor the available evidence regarding HHA discharge planning, and may reconsider the issue of discharge planning timeframes in the future. We agree that HHAs should provide necessary information to transfer providers. This requirement is already included in the clinical records requirement of the HHA CoPs at § 484.110(a)(6).

Comment: One commenter requested that we clarify that one way HHAs could demonstrate compliance with the proposed requirement to involve physicians in discharge planning is by documenting any outreach to the physician to coordinate his or her involvement.

Response: In light of the burden and practicality concerns described by commenters, we are not finalizing the requirements originally proposed at § 484.58(a)(2). In accordance with the requirements of the HHA CoP final rule at § 484.60(c)(3)(ii), HHAs must communicate with all physicians who are involved in the patient's HHA plan of care whenever there are revisions related to the plan for patient discharge. We agree with the commenter that one way the HHA can demonstrate compliance is to document the HHA's outreach to the physician(s) involved.

Comment: A few commenters requested that the HHA requirements mirror the hospital discharge requirements to the extent reasonable. The commenter stated the hospital CoP proposed language at § 482.43(c)(1), requires that a ''registered nurse, social worker, or other qualified personnel must coordinate the discharge needs evaluation and development of the discharge plan.'' The commenters recommend that a comparable requirement be included in the HHA CoPs, as it would help clarify the respective roles of HHA staff and the patient's physician.

Response: We appreciate the commenter's suggestion. Section 484.105(c) of the recently implemented HHA CoP final rule requires each HHA to have one or more clinical managers with responsibility for, among other things, coordinating patient care, making referrals, assuring that patient needs are continually assessed, and assuring the development, implementation, and updates of the individualized plan of care. Section 484.60(c) includes the discharge plan as part of the overall plan of care. Therefore, the current rules already require a clinical manager, who may be a physician, nurse, or licensed therapist, to be responsible for the discharge plan.

Comment: We received one comment related to the proposed language regarding caregiver support. The commenter stated that the HHA's primary consideration with regard to family caregivers is their willingness to provide services to an ill, disabled or frail elderly individual. The commenter went on to state that there needs to be consideration of whether the caregiver is able to provide the care, especially given other factors such as the caregiver's age and other possible limitations. The commenter recommended that CMS consider requiring health care providers to engage in a conversation and subsequently document that a family caregiver understands the follow-up services that will be most critical to the patient, is able and willing to assist with the provision of care, as well as what specific supports the family caregiver requests and needs. The commenter further recommended that, in discussions of what support a family caregiver may need, his or her economic resources should be taken into account.

Response: Issues of caregiver willingness and ability are already addressed as part of the comprehensive assessment requirements at § 484.55(c)(6). Additionally, HHAs must include caregiver education and training as part of the plan of care (§ 484.60(a)(2)(xiii)) and must provide that training (§ 484.60(d)(5)). We believe that these ongoing efforts to educate, train, and otherwise engage caregivers throughout the continuum of HHA care meet the needs of caregivers in preparing for discharge. Furthermore, in this rule we are finalizing a requirement that HHAs must provide necessary medical information to post-HHA care providers to ensure the safe and effective transition of care that supports the post discharge goals for the patient. The sharing of this information will facilitate identification of needs and preferences moving forward in the next care setting.

Comment: One commenter stated that the regulation should be specific in requiring that the updates envisioned in § 484.58(a)(1) include re-checking goals and preferences of the patient. Proposed § 484.58(a)(4) would require that the patient be informed of the ''final'' plan, and the commenter suggested that the patient should be informed of every version of the plan. Additionally, the commenter suggested that the regulation should require that the patient not only be informed of the discharge plan, but also be given a copy of the discharge plan and each revision.

Response: We appreciate the commenter's suggestions related to discharge plan updates and the rechecking of patient goals and preferences. Section 484.60(c)(3)(ii) of the current HHA CoPs require that any revisions related to plans for the patient's discharge must be communicated to the patient, representative, caregiver, all physicians issuing orders for the HHA plan of care, and the patient's primary care practitioner or other health care professional who will be responsible for providing care and services to the patient after discharge from the HHA (if any). We believe that this existing requirement for regular communication accomplishes a similar goal without being overly prescriptive regarding the format of communications. Therefore, we are not finalizing any additional regulations for this topic.

Comment: One commenter requested clarification regarding the term ''clinical record.'' The commenter asked if the term ''clinical record'' is broader than the term ''medical record.'' The commenter also asked if this would include everything that would also be part of the ''medical record,'' and recommended that the final regulation substitute the term ''individual's medical record'' in place of ''clinical record'' for consistency.

Response: The term ''clinical record'' is the current language that is used in the HHA CoPs and is not broader than the term ''medical record.'' We use the terms interchangeably as they relate to HHAs.

Final Decision: After consideration of the comments we received on the proposed discharge planning rule, we are not finalizing the requirements set forth in proposed § 484.58(a), with the exception of those IMPACT Act requirements set forth at proposed paragraph (a)(6). The IMPACT Act requirements are being finalized at § 484.58(a).

2. Discharge or Transfer Summary Content (Proposed § 484.58(b))

We proposed at § 484.58(b) to establish a new standard, ''Discharge or transfer summary content,'' to require that the HHA send necessary medical information to the receiving facility or health care practitioner. The information must include, at the minimum, the following:

- Demographic information, including but not limited to name, sex, date of birth, race, ethnicity, and preferred language;
- Contact information for the physician responsible for the home health plan of care;
- Advance directive, if applicable;
- Course of illness/treatment;
- Procedures;
- Diagnoses;
- Laboratory tests and the results of pertinent laboratory and other diagnostic testing;
- Consultation results;
- Functional status assessment;
- Psychosocial assessment, including cognitive status;
- Social supports;
- Behavioral health issues;
- Reconciliation of all discharge medications (both prescribed and over-the-counter);
- All known allergies, including medication allergies;
- Immunizations;
- Smoking status;
- Vital signs;
- Unique device identifier(s) for a patient's implantable device(s), if any;
- Recommendations, instructions, or precautions for ongoing care, as appropriate;
- Patient's goals and treatment preferences;
- The patient's current plan of care, including goals, instructions, and the latest physician orders; and
- Any other information necessary to ensure a safe and effective transition of care that supports the post-discharge goals for the patient.

We proposed to include these elements in the discharge plan so that there would be a clear and comprehensive summary for effective and efficient follow-up care planning and implementation as the patient transitions from HHA services to another appropriate health care setting.

We solicited comments on these proposed medical information requirements.

Comment: We received many comments related to the content of the discharge summary; however, there was a wide range of suggestions on what type and how many elements should be included in the summary. Below is a summary of the different suggestions commenters made:

Items to be added to the summary:

- Caregiver name, contact information, and capacity.

Items to be eliminated from the summary:

- Laboratory and diagnostic tests and results: They would not typically be part of the home health medical record. This information would be part of the medical record for the entity that ordered the services.
- Unique Device Identifier: The HHA would not likely have this information. This information would be part of the medical record where the device was implanted.
- Consultation with a state's Prescription Drug Monitoring Program (PDMP): Some states do not have a PDMP and it is not clear what practitioners would/could have access to this data base. Practitioners with drug prescribing privileges are the only people who might find value from a PDMP.

Items to include in the discharge summary only if the HHA performed or facilitated (or otherwise could transmit the information without additional activity):

- Consultation results and procedures: Only require inclusion of consultations and procedures that the HHA performed. The HHA would not have as part of their medical record consultation results and procedures performed by other facilities.
- Immunization: Only require reporting immunizations the HHA has provided.

Items to revise:

- Smoking status: Modify to include reporting of any significant adverse health behaviors rather than limiting the information to smoking.
- Any other information necessary: This provision should add ''as determined necessary by the HHA.''
- Current care plan, including goals and latest physician orders: The commenters noted that the proposal seemed redundant with the following required elements:

++ Course of illness/treatments.

++ Patient's goals and treatment preferences.

Items to be added:

- Diet.
- Name of the provider (facility, physician and advanced practice nurse) who will continue to provide care following discharge from home health care.
- Contact information for the HHA that provided the care.
- Name of any community-based social service provider known to be continuing service for the patient or from whom the patient may seek future assistance, such as Meals-on-Wheels, companion programs, housing programs, etc.
- Information on upcoming health-related appointments. These would include, but not be limited to, physician appointments, community social services and supports (for example, Meals-on-Wheels), non-medical home health, adult day care, outpatient therapy, and mental health follow-up appointments.
- Pharmacy, DME/oxygen, emergency response system or other vendor contact information (contact persons' names, phone numbers, and fax numbers).
- Instructions for patients and caregivers on what to do if unexpected symptoms or events occur. It may involve contacting a physician or behavioral health counselor or calling the home health agency office.

Furthermore, many commenters questioned the usefulness of much of the proposed minimum information that would be included in the transfer or discharge summary, as compared to the burden of compiling all of the required information. A few commenters stated that the intent of the discharge summary was good; however, there should be some allowances for the clinician to be able to give a succinct picture of the patient condition. Commenters stated that these requirements will take time to compile, delaying the ability to summarize pertinent succinct information timely. Other commenters stated that CMS should develop streamlined alternatives to the proposals, particularly the discharge summary requirements. Another commenter requested clarification as to whether CMS would only require that HHAs provide discharge or transfer summaries to other providers, not patients. It was suggested that CMS require the information be sent to the physician responsible for the home health plan of care, in addition to the receiving facility or health care practitioner, which would ensure that the physician who established the home health plan of care has information to continue to be involved in the patient's care at a later time, as necessary. However, another commenter believed it may not be necessary to forward such information to the health care practitioner. The commenter recommended that the language be changed to reflect that the information be sent to the receiving facility and made available, upon request, to the health care practitioner.

Response: We appreciate the wide array of comments related to the

proposed requirement at § 484.58(b). The disparate nature of the comments lead us to conclude that, at this time, there is no clear consensus regarding the minimum information that should be shared from one HHA to another health care provider in order to assure patient health and safety. We also note that there is a lack of a well-developed evidence base to identify best practices in the transfer of information from an HHA to another health care provider. Establishing a specific list of information that must be shared from an HHA to another health care provider creates a risk of simultaneously overburdening HHAs with elements that are not applicable and leaving out elements that are critical to assuring a safe and effective care transition in any given situation. The impracticality and potential ineffectiveness of such a list of mandatory discharge or transfer summary elements developed in the absence of public consensus and evidence-based practices would not improve patient care and safety, nor would it assure the efficient use of HHA resources. Therefore, we are not finalizing a list of requirements related to the content of the discharge summary. Rather, we are finalizing a requirement that HHAs must send all necessary medical information pertaining to the patient's current course of illness and treatment, post-discharge goals of care, and treatment preferences, to the receiving facility or health care practitioner to ensure the safe and effective transition of care. This broad, flexible requirement allows HHAs to tailor the exchange of information to the exact circumstances and needs of the care transition in order to support the patient's post-discharge goals.

Sending the discharge summary to the follow-up care practitioner or facility was set forth in the HHA CoPs final rule, and we did not propose to modify that requirement. It is just as important for the receiving health care practitioner to be sent the discharge information as it is for the HHA to receive such information from the patient's previous care provider. For continuity of care and a smooth transition from the HHA, we believe the discharge summary will provide invaluable information to the receiving practitioner/facility to continue to meet the patient's care needs.

We continue to believe that there are instances in which the receiving health care practitioner or facility would request additional information beyond that which the HHA provided in the discharge or transfer summary, such as the patient's actual plan of care. However, we agree with commenters that this information is not automatically necessary for each and every HHA patient discharge or transfer. Therefore, we have modified this requirement, as finalized at § 484.58(b)(2), to require HHAs to comply with requests for additional essential clinical information as may be necessary for treatment of the patient that are made by the receiving facility or health care practitioner. We believe that this change will assure that receiving facilities and practitioners have access to this information as needed, while not overburdening HHAs to preemptively provide such a potentially large volume of information that may not be helpful to receiving practitioners and facilities.

Comment: One commenter stated that not all of the information in the plan of care and latest physician orders may be relevant at the time of discharge. CMS should allow the agency to determine which parts of the plan of care and physician orders are appropriate to be included in the discharge summary.

Response: We appreciate the commenters' suggestions to allow the HHA to determine, which parts of the plan of care and physician orders are appropriate to include in the discharge summary. As noted above, we have revised the requirement at § 484.58(b) to include only that medical information pertaining to the patient's current course of illness and treatment, post-discharge goals of care, and treatment preferences that is necessary to ensure the safe and effective transition of care, as identified by the HHA. We have replaced the proposed requirement that an HHA must send a copy of the plan of care with a requirement at § 484.58(b)(2) that an HHA must comply with requests from receiving providers for additional essential clinical information as may be necessary for the treatment of the patient, which may include providing the receiving practitioner or facility with a copy of the plan of care. We believe that this revised approach balances the need for information exchange with the need for succinct, targeted communication among providers.

Comment: Many commenters acknowledged that the requirements are intended to provide safe and efficient follow-up care planning. However, commenters believe that the information required in the proposed rule would involve volumes of documents, many of which would be duplicative of information provided in an EHR. One commenter acknowledged that the required elements for the discharge or transfer summary are aligned with the Common Clinical Data Set specified in the 2015 Edition of the health IT certification criteria. The commenter stated that the most direct method to comply with the proposed discharge summary requirements is for agencies to utilize an interoperable EHR that could meet the Common Clinical Data Set specification that is supported by the Consolidated Clinical Document Architecture (C–CDA) and the 2015 Edition certification criteria for § 170.315(b)(1) (Transitions of Care) and § 170.315(b)(9) (Care Plan). Another commenter added that EHR vendors may be able to assist in the provision of this information because the commenter believes that the vendors can help streamline and standardize the exchange process for every discharge and transition. However, another commenter stated that current home care electronic medical record systems do not support the creation of a transfer summary and will require time to accomplish. In addition, the commenter stated that several of the data elements may not apply to every patient situation. The commenter added that simply stating 'not applicable' could be construed in a medical record as incomplete, unavailable, or unknown and that only the known, applicable data be included in the transfer summary, and that CMS should allow for a grace period to come into compliance with these new requirements.

Response: We appreciate the comments regarding the discharge summary and the EHR. We understand that HHAs may face significant challenges in electronically exchanging the list of items originally set forth at proposed § 484.58(b). In light of these challenges and for the reasons set forth above, we are not finalizing a list of items to be included in every discharge or transfer summary. We do believe that, over time, HHAs and all providers should continue to work toward fully implementing an EHR that is capable of collecting, sending, and receiving patient data to improve care transitions. We would expect acute care providers that collect data electronically to provide this information in an electronic format to HHAs that have the capacity to receive such electronic information and incorporate it into their EHRs. We also believe the HHA vendors can help streamline and standardize the exchange process for every discharge and transition.

Comment: One commenter explained that transfers between HHAs are often initiated by the patient and patient transfers are unknown to the agency until the agency receives a call from the patient's new provider. The commenter

further noted that patients rarely consult with their current agency on the quality of a competitor. The commenter questioned how HHAs will be held accountable for compliance in instances when the HHA is unaware of a patient's transfer or pending transfer. The commenter recommended that language regarding transfers to a different HHA be changed to refer to only planned transfers in which the current HHA is involved.

Response: We expect all HHAs to meet the requirements of this final rule. In accordance with the existing clinical records requirements at § 484.110(a)(6), HHAs must send a completed transfer summary within 2 business days of a planned transfer, if the patient's care will be immediately continued in a health care facility. If the transfer was unplanned, the HHA must send a completed transfer summary within 2 business days of becoming aware of the unplanned transfer, only if the patient is still receiving care in a health care facility at the time when the HHA becomes aware of the transfer. There are additional requirements related to sending information following patient discharge, also located at § 484.110(a)(6), that do not directly pertain to patient transfers.

Final Decision: After consideration of the comments we received on the proposed rule, we are finalizing § 484.58(b) with the following modifications:

- Revising § 484.58(b)(1) to require that, instead of a specified list, the HHA must send necessary medical information pertaining to the patient's current course of illness and treatment, post-discharge goals of care, and treatment preferences to the receiving facility or health care practitioner to ensure the safe and effective transition of care.
- Revising § 484.58(b)(2) to require the HHA to comply with requests for additional necessary clinical information made by the receiving facility or health care practitioner, which may include items such as a copy of the patient's current plan of care or latest physicians' orders.

Miscellaneous Comments (Proposed § 484.58)

Comment: We received one comment requesting that occupational therapists be listed as part of the discharge planning team needed to perform discharge assessment and planning. Another commenter suggested that CMS consider adding the role of the ''Discharge Intensivist.'' The commenter stated that the role can be an assistive role handled through a ''Discharge Health Coach (DHC)'' to effectuate a discharge plan. The role of a DHC would be an assistive role that is trained as a discharge coach. The commenter stated that this kind of collaborative communication doesn't currently exist in a home health agency, and needs to be created for the purpose of meeting the goal of effective discharge planning and execution.

Response: We appreciate the comment on various professionals who may be involved in the discharge planning process. HHAs are permitted to involve any and all professionals, as appropriate to each patient's discharge plan. While we have removed the specific discharge planning requirements of proposed § 484.58(a), HHAs will continue to engage in discharge planning as part of overall care planning set forth in § 484.60. We encourage HHAs to utilize the expertise of all professionals involved in a patient's care, as well as any specialty services that may benefit HHAs and their patients.

Comment: One commenter stated that we should include transitions to acute care, along with transitions to PAC facilities in setting out requirements for HHA discharge planning. The commenter added that the proposed regulations provide requirements for HHAs when discharging individuals to other PAC providers and believe that individuals would benefit from similar planning and information sharing when HHAs must send the individual back to acute care. The commenter recommended that documentation, including the individual's health history with previous functional status, current functional status, goals and preferences, be provided to the hospital in order to expedite care and discharge planning in the hospital setting.

Response: We agree with the commenter's suggestion that HHAs can be integral in transitioning the individual back to acute care and that discharge summary documentation should be provided to expedite care and subsequent additional discharge planning in the hospital setting. The requirement at § 484.58(b), ''Discharge or transfer summary content'', requires the HHA to send necessary medical information to the receiving facility or health care practitioner. This applies to patients discharged to an acute care setting.

Comment: One commenter stated that HHAs should not be allowed to discharge patients who have an ongoing need unless they are discharging to a Medicaid consumer direction program. The commenter states that it is too easy for HHAs to discharge people who are difficult, or even those with difficult family members or those that require visits at inconvenient hours.

Response: We appreciate the commenter's views and concerns. As finalized in the HHA CoP final rule, HHAs may only discharge patients for certain specific reasons. We believe that the requirements set forth at § 484.50(d) appropriately regulate HHA discharge and transfer policies to prevent inappropriate discharges. Specifically, § 484.50(d)(5)) requires that if the patient's (or other persons in the patient's home) behavior is disruptive, abusive, or uncooperative to the extent that delivery of care to the patient or the ability of the HHA to operate effectively is seriously impaired, the HHA must take numerous steps to resolve the problem and provide advance notice that a discharge is being considered. The HHA must advise the patient, representative (if any), the physician(s) issuing orders for the home health plan of care, and the patient's primary care practitioner or other health care professional (if any), who will be responsible for providing care and services to the patient after discharge from the HHA, that a discharge for cause is being considered. The HHA must also make efforts to resolve the problem(s) presented by the patient's behavior, the behavior of other persons in the patient's home, or situation. Furthermore, the HHA must provide the patient and representative (if any), with contact information for other agencies or providers who may be able to provide care. Finally, the HHA must document the problem(s) and efforts made to resolve the problem(s), and enter this documentation into its clinical records.

Comment: A commenter stated that if a patient went from an HHA to a SNF there should be an independent review to see if the HHA did everything possible to prevent this outcome, including interviewing the patient. If the HHA was found to have caused the SNF admission directly or by omission, the HHA should have to pay for re-institutionalization.

Response: At this time we do not require HHAs to track the patients at discharge. In addition, we do not have the ability to bill the HHA for re-institutionalization of the patient. This comment is beyond the scope of this final rule.

Comment: One commenter requested that we require specific criteria for the discharge of people who are homeless. The commenter stated that HHAs should be prohibited from refusing to serve clients in homeless shelters or hotels serving as homes. The same commenter also suggested that there

should be someone to call who has the power to effect immediate intervention, if a patient is being discharged without instructions or without services being set up. They add that they are regularly called to try to assist people who have been discharged and they have no written instructions, or poorly written instructions, and they tried to protest or ask for additional information from the HHA without recourse or solution.

Response: We appreciate the comments related to the discharge of patients who are homeless, and the lack of planning and discharge instructions for such patients. The HHA CoPs require HHAs to work with the patient and caregiver, including communication with the patient's physician(s), when updating the discharge plan. The HHA is also already required to educate and instruct the patient regarding his or her care responsibilities on an ongoing basis to prepare for ultimate discharge. Because education and training to facilitate discharge will have been provided during the entire course of HHA care, thus preparing patients and caregivers for discharge, this final rule does not include a requirement for discharge instructions. This final rule does not include a requirement for HHAs to establish follow-up services once a patient is discharged, as this is the role of the patient's primary care or other follow-up care practitioner. This final rule requires HHAs to send the patient discharge summary to the patient's follow-up health care provider to ensure that this essential information is communicated as the patient transitions care providers. Furthermore, this final rule requires HHAs to provide additional medically necessary information upon request from a receiving facility or practitioner. We believe that these requirements address these important concerns.

Comment: One commenter suggested that CMS should require utilization of independent living centers instead of nursing homes for moderately functioning patients. The commenter stated that it is cheaper for the government and it gives patients an opportunity to improve on their physical and mental functions and hopefully be reintegrated into the community. Additionally, the commenter added that independent living centers should develop relationships with HHAs and give these patients services beyond room and board. These centers are considered homes to patients whose family members are unable to care for them.

Response: We thank the commenter for their suggestion to require utilization of independent living centers instead of nursing homes for moderately functioning patients. However, these comments are beyond the scope of this rule and cannot be addressed.

Final Decision: After consideration of the miscellaneous comments, we are not making any additional revisions to § 484.58.

G. Critical Access Hospital Discharge Planning (Proposed §§ 485.635(a)(3)(viii) and 485.642)

Sections 1820(e) and 1861(mm) of the Act require CAHs participating in Medicare and Medicaid to meet certain specified requirements. We have implemented these provisions in 42 CFR part 485, subpart F, ''Conditions of Participation: Critical Access Hospitals (CAHs)''.

CMS established requirements for the Essential Access Community Hospital (EACH) and Rural Primary Care Hospital (RPCH) providers that participated in the seven-state demonstration program in 1993. Minimally, what was required under the former EACH/RPCH program was adopted for what is now the CAH program (see 62 FR 45966 through 46008, August 29, 1997). Currently, the CoPs at § 485.631(c)(2)(ii) provide that a CAH must arrange for, or refer patients to, needed services that cannot be furnished at the CAH. CAHs are to ensure that adequate patient health records are maintained and transferred as required when patients are referred. Also, the CoPs at § 485.635 require a CAH to develop and keep current a nursing care plan for each patient receiving inpatient services.

Given the IMPACT Act mandate, we proposed CAH discharge planning requirements. In the Discharge Planning proposed rule, we solicited comments on the timeline for implementation of the proposed CAH discharge planning requirements (80 FR 68139). We discuss the comments we received and our responses in section II.B of this final rule. We proposed to develop requirements in the form of five standards at § 485.642 and one additional standard at § 485.635. We would require that all inpatients and certain categories of outpatients be evaluated for their discharge needs and that the CAH develop a discharge plan. We also proposed to require that the CAH provide specific discharge instructions, as appropriate, for all patients.

We proposed that each CAH's discharge planning process ensure that the discharge needs of each patient were identified and resulted in the development of an appropriate discharge plan for each patient.

Comment: Many commenters agreed with including CAHs in the discharge planning requirements. The commenters stated that requiring CAHs to have a discharge planning CoP would assist in providing a systematic approach to effective and quality patient care. A commenter stated that the inclusion of patient considerations is important and they appreciate CMS's inclusion of statements about the importance of geography. One commenter stated that they support the requirement that the discharge planning policies and procedures be developed with input from the CAH's professional health care staff, nursing leadership as well as other relevant departments and be reviewed and approved by the governing body. The commenter further stated that this is the current process in many CAHs. However, one commenter stated that the current incentive programs to discourage readmissions already address many of the factors included in our proposed discharge planning requirement, such as the need for non-health care factors, and, therefore, this requirement is not necessary.

Response: We appreciate the commenters' support for the CAH discharge planning requirements and we appreciate being made aware that many CAHs have developed policies and procedures for discharge planning. We are finalizing a revised version of the proposed CAH discharge planning requirements that focuses on patient outcomes and provides implementation flexibilities.

Comment: Several comments stated that the CAH discharge planning requirements should be identical to the hospital discharge planning requirements.

Response: The CAH discharge planning requirements are intentionally very similar to those of the hospital discharge planning requirements. However, there are some necessary differences as a result of some of the challenges that are unique to CAHs, including their rural location, small size, and limited resources.

Comment: One commenter suggested that the requirements under § 482.43(f)(1) (regarding transfer to post-acute care services) apply to CAHs.

Response: Section 4321 of the BBA amended the discharge planning requirements to require that the discharge planning evaluation indicate the availability of home health services provided by individuals or entities that participate in the Medicare program. Section 4321(a) of the BBA requires that hospitals, in their discharge planning evaluation, provide a listing regarding the ''availability of home health

services.'' This has been implemented in the hospital CoPs under § 482.43(c)(8). Section 926 of the MMA further amended 1861(ee) of the Act to include information regarding SNFs that participate in the Medicare program; the IMPACT Act added section 1899B of the Act further requires that CAHs provide patients with LTCH, IRF, HHA, and SNF data on quality measures and data on resource use measures. Section 4321 of the BBA did not apply to CAHs, given their rural location and the limited number of PAC providers in their geographic regions. We believe that extending this requirement to CAHs by regulation places an unnecessary burden on them. While CAHs are not required to include in the discharge plan a list of HHAs, SNFs, IRFs, or LTCHs, they are required to, like hospitals, assist patients, their families, or their caregivers or support persons in selecting a PAC provider. CAHs must do so by using and sharing data that includes but is not limited to HHA, SNF, IRF, or LTCH data on quality measures and resource use measures. Although CAHs are not required to include in the discharge plan a list of HHAs, SNFs, IRFs, or LTCHs, there is nothing prohibiting them from doing so.

Proposed § 485.642

We received no substantive comments on the introductory language of this provision. We are finalizing it with only minor stylistic amendments that do not affect the substance of the rule. As revised, the CAH must have an effective discharge planning process that focuses on the patient's goals and preferences and includes the patient and his or her caregivers/support person(s) as active partners in the discharge planning for post-discharge care. The discharge planning process and the discharge plan must be consistent with the patient's goals for care and his or her treatment preferences, ensure an effective transition of the patient from CAH to post-discharge care, and reduce the factors leading to preventable CAH readmissions.

1. Design (Proposed § 485.642(a))

We proposed at § 485.642(a) to establish a new standard, ''Design,'' to require a CAH to have policies and procedures for discharge planning that have been developed with input from the CAH's professional health care staff and nursing leadership, as well as other relevant departments. The policies and procedures would be approved by the governing body or responsible individual and be specified in writing. We did not receive any comments on this standard. However, upon further review, we believe that this requirement may be too process oriented and too prescriptive as written to finalize and that a further revision to this requirement for CAHs is warranted. We therefore, are not finalizing this requirement as proposed and we refer readers to section II.C.3 of this final rule for a detailed discussion of this decision.

2. Applicability (Proposed § 485.642(b))

We proposed at § 485.642(b) to establish a new standard, ''Applicability,'' to require the CAH's discharge planning process to identify the discharge needs of each patient and to develop an appropriate discharge plan. We note that, in accordance with section 1814(a)(8) of the Act and § 424.15, physicians must certify that the individual may reasonably expect to be discharged or transferred to a hospital within 96 hours after admission to the CAH. We proposed to require that the discharge planning process must apply to all inpatients, observation patients, patients undergoing surgery or same-day procedures where anesthesia or moderate sedation was used, emergency department patients identified as needing a discharge plan, and any other category of patients as recommended by the professional health care staff and approved by the governing body or responsible individual.

Comment: A number of commenters agreed with the proposal to broaden the categories of patients who would be evaluated for post-discharge needs. Several stated that they believed the inclusion of these categories of patients was necessary for effective transition from acute settings to post-acute settings. However, the majority of commenters expressed concern over the undue burden that they believe would result from this proposed change. Many stated that they believe that the current evaluation requirement is effective for screening and targeting high-risk patients who have true discharge needs. A number of commenter stated that they already routinely screen certain categories of outpatients, such as observation patients, and that automatically requiring discharge plans for patients in these categories would shift resources away from those patients most in need of discharge plan.

Response: As with hospitals, we agree with commenters that the requirement needs to be scaled back in its scope and applicability to a more flexible requirement. We therefore, are not finalizing the requirements at proposed § 485.642(b). Instead, we are finalizing requirements at § 485.642(a) introductory text and (a)(2), respectively, that would require that a CAH's discharge planning process must identify, at an early stage of hospitalization, those patients who are likely to suffer adverse health consequences upon discharge in the absence of adequate discharge planning and must provide a discharge planning evaluation for those patients so identified, as well as for other patients upon the request of the patient, patient's representative, or patient's physician. In addition, at § 485.642(a)(2), a discharge planning evaluation must include an evaluation of a patient's likely need for appropriate post-hospital services, including, but not limited to, hospice care services, post-hospital extended care services, and home health services, and must also determine the availability of those services.

Final Decision: Similar to hospitals, after consideration of the comments we received on the proposed rule, we are revising proposed § 485.642(b), and finalizing as § 485.642(a) introductory text and (a)(2), to require that the CAH's discharge planning process identify, at an early stage of hospitalization, those patients who are likely to suffer adverse health consequences upon discharge in the absence of adequate discharge planning, and must provide a discharge planning evaluation for those patients so identified, as well as for other patients upon the request of the patient, patient's representative, or patient's physician. A discharge planning evaluation must include an evaluation of a patient's likely need for appropriate post-hospital services, including, but not limited to, hospice care services, post-CAH extended care services, and home health services; such evaluation must also determine the availability of those services.

3. Discharge Planning Process (Proposed § 485.642(c))

We proposed at § 485.642(c), ''Discharge planning process,'' to require that CAHs implement a discharge planning process to begin identifying the anticipated post-discharge goals, preferences, and discharge needs of the patient and begin to develop an appropriate discharge plan for the patients identified in proposed § 485.642(b). We proposed at § 485.642(c)(1) to require that a registered nurse, social worker, or other personnel qualified in accordance with the CAH's discharge planning policies must coordinate the discharge needs evaluation and development of the discharge plan. We also proposed at § 485.642(c)(2) to require that the discharge planning process begin within

24 hours after admission or registration for each applicable patient identified under the proposed requirement at § 485.642(b), and that the process be completed prior to discharge home or transfer to another facility, without unduly delaying the patient's discharge or transfer. If the patient's stay was less than 24 hours, the discharge-related needs of the patient would be identified prior to the patient's discharge home or transfer to another facility and without unnecessarily delaying the patient's discharge or transfer. We noted that this policy does not pertain to emergency-level transfers for patients who require a higher level of care. However, while an emergency-level transfer would not need a discharge evaluation and plan, we would expect that the CAH would send necessary and pertinent information with the patient that is being transferred to another facility.

We proposed at § 485.642(c)(3) that the CAH's discharge planning process require regular reevaluation of patients to identify changes that require modification of the discharge plan. The discharge plan must be updated, as needed to reflect these changes. We proposed at § 485.642(c)(4) that the practitioner responsible for the care of the patient be required to be involved in the ongoing process of establishing the discharge plan.

We proposed at § 485.642(c)(5) that the CAH would be required to consider caregiver/support person availability and community based care, and the patient's or caregiver's/support person's capability to perform required care including self-care, follow-up care from a community based provider, care from a support person(s), care from and being discharged back to community-based health care providers and suppliers, or, in the case of a patient admitted from a long term care or other residential facility, care in that setting, as part of the identification of discharge needs. We also proposed to require that CAHs must consider the availability of and access to non-health care services for patients, which could include home and physical environment modifications, transportation services, meal services, or household services, including housing for homeless patients. In addition, we encouraged CAHs to consider the availability of supportive housing, as an alternative to homeless shelters that can facilitate continuity of care for patients in need of housing.

As part of the on-going discharge planning process, we proposed in § 485.642(c)(5) that CAHs would need to identify areas where the patient or caregiver/support person(s) would need assistance and address those needs in the discharge plan. CAHs must consider the following in evaluating a patient's discharge needs including, but not limited to:

- Admitting diagnosis or reason for registration;
- Relevant co-morbidities and past medical and surgical history;
- Anticipated ongoing care needs post-discharge;
- Readmission risk;
- Relevant psychosocial history;
- Communication needs, including language barriers, diminished eyesight and hearing, and self-reported literacy of the patient, patient's representative or caregiver/support person(s), as applicable;
- Patient's access to non-health care services and community-based care providers; and
- Patient's goals and preferences.

We proposed at § 485.642(c)(6) that the patient and caregiver/support person(s) would be involved in the development of the discharge plan, and informed of the final plan to prepare them for their post-CAH care.

We proposed at § 485.642(c)(7) to require that the patient's discharge plan address the patient's goals of care and treatment preferences. During the discharge planning process, we would expect that the appropriate staff would discuss the patient's post-acute care goals and treatment preferences with the patient, the patient's family or the caregiver (or both) and subsequently document these goals and preferences in the discharge plan. These goals and treatment preferences would be taken into account throughout the entire discharge planning process.

We proposed at § 485.642(c)(8) to require that CAHs assist patients, their families, or caregivers in selecting a PAC using IMPACT Act quality measures. This provision is part of our IMPACT Act requirements and is discussed later in this preamble.

We proposed at § 485.642(c)(9) to require that the evaluation of the patient's discharge needs and discharge plan would have to be documented and completed on a timely basis, based on the patient's goals, preferences, strengths, and needs. This would ensure that appropriate arrangements for post-CAH care were made before discharge. We believe that the CAH would establish more specific time frames for completing the evaluation and discharge plans based on the needs of their patients and their own operations. We proposed to require that the evaluation be included in the medical record. The results of the evaluation would be discussed with the patient or patient's representative. All relevant patient information would have to be incorporated into the discharge plan to facilitate its implementation and to avoid unnecessary delays in the patient's discharge or transfer.

We also proposed at § 485.642(c)(10) to require that the CAH assess its discharge planning process in accordance with the existing requirements at § 485.635(a)(4). The assessment would have to include ongoing, periodic review of a representative sample of discharge plans, including those patients who were readmitted within 30 days of a previous admission, to ensure that they were responsive to patient discharge needs.

Comment: Several commenters stated that the rural location and small size of CAHs pose difficulties for them in ensuring that they have the appropriate staff available to implement the discharge planning requirements. As a result, the commenters expressed that it would present significant burden to CAHs if all proposed patients were required to have discharge planning within 24 hours of admission or registration. Commenters suggested that CAHs be permitted to use telehealth options to fulfill some of the requirements due to the issues they face related to staffing shortages.

Response: The requirements do not prohibit the use of telehealth services to meet the discharge planning requirements so long as all of the discharge and telehealth requirements are met. It is not uncommon for CAHs to use telehealth services in the provision of patient care services given their rural location and their resultant staffing difficulties. In addition, we are finalizing our requirement at § 485.642(a) to state that any discharge planning evaluation or discharge plan required under this paragraph must be developed by, or under the supervision of, a registered nurse, social worker, or other appropriately qualified personnel. As such, CAHs are not limited to using social workers or case managers to meet these requirements. The CAH has the flexibility to determine and identify other personnel qualified to coordinate the discharge planning evaluation and development of the discharge plan. We expect that the CAH will identify personnel qualified to conduct this activity as part of its discharge planning process.

Comment: One commenter stated that many rural Americans live in areas with limited health care resources, restricting their available options for care, including post-acute care options. As such, the commenter suggested that we allow rural hospitals to consider the

impact of incomplete quality reporting data for PAC providers in the local community or where limited resources are available to collect the data, especially where geographic considerations are especially important to the patient and caregivers.

Response: We appreciate the constraints under which rural hospitals and CAHs must operate. Since the goal is to provide quality care for patients, we expect the providers to consider all information that is available and pertinent to a given location. The regulation will require rural providers to assist patients and their families, or their caregivers/support person in selecting a PAC by using and sharing data. The data that are provided should be pertinent to the patient's goals of care and treatment preferences. We expect that any available data will be shared with the patient and various support individuals, and that the provider will explain the issues or constraints with the data and advise the patient on seeking PACs outside of the local community. We also expect that providers in rural and frontier areas will extend their list of PAC providers to areas outside of the local community if necessary.

Comment: One commenter stated that the requirement to utilize data on quality measures and data on resource use measures could be utilized to discourage the use of CAH swing beds in rural communities. Since the CAH swing bed program does not have to report data on its performance, referring facilities will list CAH Swing Bed on their referral list delivered to patients, but would have no data to include on the list. The commenter suggested that we require referring facilities to note on their discharge provider list that CAH swing beds are not required to report data similar to freestanding SNFs.

Response: The CAH's responsibility is to advise and assist patients with their choices based on quality data and the patient's goals of care and treatment preferences. As such, we do not believe that any provider will be disadvantaged with this requirement.

Final Decision: After consideration of the comments received on the proposed rule, both those discussed above and the comments discussed in conjunction with the parallel hospital provisions, we are finalizing and redesignating § 485.642(c) with the following modifications:

- Revising and redesignating § 485.642(c)(2) under § 485.642(a) to eliminate the 24-hour time frame requirements and to state that the CAH must identify at an early stage of hospitalization all patients who are likely to suffer adverse health consequences upon discharge if there is no adequate discharge planning.
- Revising and redesignating § 485.642(c)(6) under § 485.642(a) to state that the patient and caregiver/support person(s), as applicable, must be involved in the development of the discharge plan, and informed of the final plan to prepare them for post-CAH care.

4. Discharge to Home (Proposed § 485.642(d)(1) Through (3))

We proposed at § 485.642(d)(1) to establish a new standard, ''Discharge to home'', to require that discharge instructions be provided at the time of discharge to the patient, or the patient's caregiver/support person (or both). Also, if the patient was referred to a PAC provider or supplier, the discharge instructions would be provided to the PAC provider/supplier.

At § 485.642(d)(2) we proposed that instructions on post-discharge care include, but not be limited to, instruction on post-discharge care, including instruction on durable medical equipment, if applicable, to be used by the patient or the caregiver/support person(s) in the patient's home, as identified in the discharge plan. We also proposed to require that the instructions include:

- Written information on warning signs and symptoms that may indicate the need to seek immediate medical attention.
- Prescriptions for medications that would be required after discharge, including the name, indication, and dosage of each drug along with any significant risks and side effects of each drug as appropriate to the patient.
- Reconciliation of all discharge medications with the patient's pre-hospital admission/registration medications (both prescribed and over-the counter).
- Written instructions regarding the patient's follow-up care, appointments, pending or planned diagnostic tests (or both), and pertinent contact information, including telephone numbers for practitioners involved in follow-up care.

In addition to the patient receiving discharge instructions, it is important that the providers responsible for follow-up care with a patient (including the PCP or other practitioner) receive the necessary medical information to support continuity of care. Therefore, we proposed at § 485.642(d)(3) to require that the CAH send the following information to the practitioner(s) responsible for follow-up care, if the practitioner is known to the hospital and has been clearly identified:

- A copy of the discharge instructions and the discharge summary within 48 hours of the patient's discharge;
- Pending test results within 24 hours of their availability;
- All other necessary information as specified in proposed § 485.642(e)(2).

We reminded CAHs to provide this information in a manner that complied with all applicable privacy and security regulations. We would expect that discharge instructions would be carefully designed and written in plain language and designed to be easily understood by the patient or the patient's caregiver/support person (or both). In addition, as a best practice, CAHs should confirm patient or the patient's caregiver/support person (or both) understanding of the discharge instructions. We recommended that CAHs consider the use of ''teach-back'' techniques during discharge planning and upon providing discharge instructions to the patient.

We proposed at § 485.642(d)(4) to require CAHs to establish a post-discharge follow-up process. We believe that post-discharge follow-up can help ensure that patients comprehend and adhere to their discharge instructions and medication regimens and improve patient safety and satisfaction. We proposed that CAHs have the flexibility to determine the appropriate time and mechanism of the follow-up process to meet the needs of their patients. However, we noted the importance of ensuring that CAHs follow-up, post-discharge, with their most vulnerable patients, including those with behavioral health conditions.

Final Decision: After consideration of the comments received on the proposed rule (as discussed under the hospital section), we are not finalizing § 482.43(d). We are redesignating the proposed requirement in § 485.642(d)(3) as § 485.642(b) and we are eliminating the specific timeframe requirements. Section 485.642(b) provides that the CAH must discharge the patient, and also transfer or refer the patient where applicable, along with all necessary medical information pertaining to the patient's current course of illness and treatment, post-discharge goals of care, and treatment preferences, at the time of discharge, to the appropriate post-acute care service providers and suppliers, facilities, agencies, and other outpatient service providers and practitioners responsible for the patient's follow-up or ancillary care.

5. Transfer of Patients to Another Health Care Facility (Proposed § 485.642(e))

When a patient is transferred to another facility, that is, another CAH, hospital, or a PAC provider, we proposed at § 485.642(e) to require that the CAH send necessary medical information to the receiving facility at the time of transfer. The necessary medical information would have to include:

- Demographic information, including but not limited to name, sex, date of birth, race, ethnicity, and preferred language;
- Contact information for the practitioner responsible for the care of the patient as described at paragraph (b)(4) of this section and the patient's caregiver/support person(s);
- Advance directives, if applicable;
- Course of illness/treatment;
- Procedures;
- Diagnoses;
- Laboratory tests and the results of pertinent laboratory and other diagnostic testing;
- Consultation results;
- Functional status assessment;
- Psychosocial assessment, including cognitive status;
- Social supports;
- Behavioral health issues;
- Reconciliation of all discharge medications with the patient's pre-hospital admission/registration medications (both prescribed and over-the-counter);
- All known allergies; including medication allergies;
- Immunizations;
- Smoking status;
- Vital signs;
- Unique device identifier(s) for a patient's implantable device (s), if any;
- All special instructions or precautions for ongoing care; as appropriate;
- Patient's goals and treatment preferences; and
- All other necessary information, and documentation as applicable, including a copy of the patient's discharge instructions, the discharge summary, and such information and documentation pertaining to current diagnoses, course of illness/treatment, laboratory results, procedures, functional status, and the patient's goals of care and treatment preferences, to ensure a safe and effective transition of care that supports the post-discharge goals for the patient.

Final Decision: After consideration of the comments we received on the proposed rule, as discussed in the hospital section at section II.C.7 of this final rule, we are finalizing § 485.642(e) with modifications. We are revising and redesignating § 485.642 as follows:

- Removing proposed § 485.642(a) and (b), and replacing these standards with revisions and redesignating as § 485.642(a) titled ''Discharge planning process.'' The final standard at § 485.642(a) incorporates and combines provisions of the current hospital discharge planning requirements (that are statutorily required for hospitals) with revised provisions from the proposed requirements at § 485.642(c).
- Removing proposed § 485.642(c), (d), and (e) and replacing these standards with revisions and redesignating as § 485.642(b) titled ''Discharge and transfer of the patient and provision and transmission of the patient's necessary medical information.'' The final standard at § 485.642(b) incorporates and combines revised provisions from the proposed requirements at § 485.642(c), (d), and (e).
- Revising § 485.642(b) to state that the CAH must provide and send the patient's necessary medical information to the receiving post-acute care services provider, if applicable, along with all necessary medical information .

III. Provisions of the Final Regulations

In this final rule, we are adopting § 482.13(d)(2) from the Hospital Innovation proposed rule with only two minor clarifying revisions. We are moving the phrase, ''including current medical records,'' to the beginning of the paragraph and by adding the word, ''and,'' before the phrase, ''within a reasonable timeframe,'' so that this part of the provision now states that the patient has the right to access their medical records, including current medical records, upon an oral or written request, in the form and format requested by the individual, if it is readily producible in such form and format (including in an electronic form or format when such medical records are maintained electronically); or, if not, in a readable hard copy form or such other form and format as agreed to by the facility and the individual, and within a reasonable time frame.

Additionally, we are adopting some of the provisions of the Discharge Planning proposed rule with the following extensive revisions and reorganizations of the final requirements as discussed above:

- Revising §§ 482.43 and 485.642, respectively, to now require that the hospital (or CAH) must have an effective discharge planning process that focuses on the patient's goals and preferences and includes the patient and his or her caregivers/support person(s) as active partners in the discharge planning for post-discharge care. The discharge planning process and the discharge plan must be consistent with the patient's goals for care and his or her treatment preferences, ensure an effective transition of the patient from hospital (or CAH) to post-discharge care, and reduce the factors leading to preventable hospital (or CAH) readmissions.
- Removing § 482.43(a), (b), and (c), respectively and § 485.642(a), (b), and (c), and replacing these standards with revised and redesignated standards at §§ 482.43(a) and 485.642(a), respectively, entitled ''Discharge planning process'' for each section. The final standards at §§ 482.43(a) and 485.642(a) incorporate and combine provisions of the current hospital discharge planning requirements (that are statutorily required for hospitals) with revised provisions from the proposed requirements at §§ 482.43(c) and 485.642(c), respectively.
- Removing § 482.43(c), (d), and (e) for hospitals and § 485.642(c), (d), and (e) for CAHs, and replacing these standards with revised and redesignated standards at §§ 482.43(b) and 485.642(b), respectively, entitled ''Discharge and transfer of the patient and provision and transmission of the patient's necessary medical information'' for each section. The final standards at §§ 482.43(b) and 485.642(b) incorporate and combine revised provisions from the proposed requirements at § 482.43(c), (d), and (e) for hospitals and § 485.642(c), (d), and (e) for CAHs, respectively. Sections 482.43(b) and 485.642(b) state that the hospital (or CAH) must discharge the patient, and also transfer or refer the patient where applicable, along with all necessary medical information pertaining to the patient's current course of illness and treatment, post-discharge goals of care, and treatment preferences, at the time of discharge, to the appropriate post-acute care service providers and suppliers, facilities, agencies, and other outpatient service providers and practitioners responsible for the patient's follow-up or ancillary care.
- Redesignate and finalize proposed § 482.43(f) at § 482.43(c) without modification.

HHAs:

- Revising § 484.58 to remove requirements related to preparing patients to be active partners in post-discharge care, effective transition of the patient from HHA to post-HHA care, and the reduction of factors leading to preventable readmissions.
- Revising § 484.58(a) to remove paragraphs (a)(1) through (5) and (7).

• Revising § 484.58(a) to combine paragraph (a)(6) with the introductory statement for paragraph (a).

• Revising § 484.58(b)(1) to require the HHA to send necessary medical information pertaining to the patient's current course of illness and treatment, post-discharge goals of care, and treatment preferences to the receiving facility or health care practitioner to ensure the safe and effective transition of care.

• Revising § 484.58(b)(2) to require the HHA to comply with requests for additional information as may be necessary for treatment of the patient made by the receiving facility or health care practitioner, which may include items such as a copy of the patient's current plan of care or latest physicians' orders.

IV. Collection of Information Requirements

Under the Paperwork Reduction Act of 1995 (PRA), we are required to provide 30-day notice in the **Federal Register** and solicit public comment before a collection of information requirement is submitted to the Office of Management and Budget (OMB) for review and approval. In order to fairly evaluate whether an information collection should be approved by OMB, section 3506(c)(2)(A) of the PRA requires that we solicit comment on the following issues:

• The need for the information collection and its usefulness in carrying out the proper functions of our agency.

• The accuracy of our estimate of the information collection burden.

• The quality, utility, and clarity of the information to be collected.

• Recommendations to minimize the information collection burden on the affected public, including automated collection techniques.

We solicited public comment on each of these issues for the following sections of this document that contain information collection requirements (ICRs). Responses to comments received for this section can be found in section VI ''Regulatory Impact Analysis'' of this final rule.

In the estimates that follow in this section of the preamble and in the Regulatory Impact Analysis (RIA), we estimate hourly costs. Using data from the Bureau of Labor Statistics (BLS) for May 2017, we have estimates of the national average hourly wages for all professions (these data can be seen at *https://www.bls.gov/oes/2017/may/oes_nat.htm*). These data do not include the employer share of fringe benefits such as health insurance and retirement plans, the employer share of OASDI taxes, or the overhead costs to employers for rent, utilities, electronic equipment, furniture, human resources staff, and other expenses that are incurred for employment. The HHS-wide practice is to account for all such costs by adding 100 percent to the hourly cost rate, doubling it for purposes of estimating the costs of regulations.

A. ICRs Regarding Hospital Discharge Planning (§ 482.43)

The requirements at § 482.43(a)(8) (and all similar requirements set out at § 485.642(a)(8) for CAHs and § 484.58(a) for HHAs), which correspond to the requirements of the IMPACT Act, are exempted from the application of the PRA pursuant to section 1899B(m) of the Act. Therefore, we are not required to estimate the public reporting burden for information collection requirements for these specific elements of the final rule in accordance with chapter 35, title 45 of the United States Code. Nor are we required to undergo the specific public notice requirements of the PRA. Therefore, the estimates we provide in the RIA section of this final rule are essentially identical to those we would estimate under the PRA with respect to the elements set out in section 1899B of the Act. The public comment period on the proposed rule gave those affected an equivalent opportunity with the greater procedural benefits of the Administrative Procedure Act and Executive Order 12866. The exemption created by the IMPACT Act does not exempt the entirety of this final rule from PRA analysis. We further note that these rules deal with the transmission of data on quality measures and data on resource use measures to patients that, are provided by the government to health care providers, not with the costs associated with its preparation. This rule does not deal with those costs.

Whenever a patient is discharged or transferred to another facility, § 482.43(b) requires hospitals to send necessary medical information to the receiving facility at the time of transfer. The current hospital CoPs already require hospitals to send along with any patient that is transferred or referred to another facility the necessary medical information for the patient's follow-up or ancillary care to the appropriate facility (at § 482.43(d) prior to finalization of this rule). Overall, we believe that almost all of the changes for hospitals constitute a clarification and restatement of the current requirements along with their interpretive guidelines, or simply state as requirements practices that most hospitals already follow for most patients. For example, we believe that medication reconciliation is a near universal practice for inpatients. Thus, we believe that hospitals are already following most of these requirements and therefore we will not be assessing any additional burden for this section beyond our estimates of the one-time cost to hospitals to modify their policies and procedures in order to ensure that they are meeting the requirements of this rule.

B. ICRs Regarding Home Health Discharge Planning (§ 484.58)

We are finalizing a new CoP at § 484.58 that will require HHAs to develop and implement an effective discharge planning process.

The requirements at § 484.58(a) correspond to the requirements of the IMPACT Act, and are exempted from the application of the PRA pursuant to section 1899B(m) of the Act. Therefore, we are not required to estimate the public reporting burden for information collection requirements for that specific element of the final rule in accordance with chapter 35, title 45 of the United States Code. Nor are we required to undergo the specific public notice requirements of the PRA. Therefore, the estimates we provide in the RIA section of this final rule are essentially identical to those we would estimate under the PRA with respect to the elements set out in section 1899B of the Act.

At § 484.58(b), we are establishing another new standard, ''Discharge or transfer summary content,'' to require that the HHA send necessary medical information pertaining to the patient's current course of illness and treatment, post-discharge goals of care, and treatment preferences, to the receiving facility or health care practitioner to ensure the safe and effective transition of care.

We are also including a requirement at § 484.58(b)(2) for HHAs to comply with requests for additional information as may be necessary for treatment of the patient made by the receiving facility or health care practitioner.

To meet both the requirements to assist patients in selecting follow-up post-acute care providers and to develop a discharge or transfer summary for each patient, we estimate that it will take an HHA approximately 10 minutes (0.167 hours) per patient. Thus, for the 12,600 HHAs, we estimate that complying with this requirement will require 3,006,000 burden hours (18 million patients × 0.167 hours) at an approximate cost of $213.4 million (3,006,000 burden hours × $71 average hourly salary for a registered nurse (RN)).

The cost of sending the discharge summary to the patient's next source of health care services, as required by § 484.110(a)(6), was accounted for in the HHA CoP final rule (82 FR 4504) issued in January 2017 and accompanying collection of information package (OMB Control Number 0938–1299). As this issue has already been addressed in separate rulemaking, and as we are not making any changes to the requirements for sending the discharge or transfer summary in this final rule, we are not modifying the existing burden estimates.

We believe that providing additional information, upon request, to follow-up care providers is a standard practice for 90 percent of HHAs. Likewise, we believe that providing such documents upon request may represent a new burden for those 10 percent of HHAs who are not already engaging in such information sharing practices. Based on information provided by commenters, who indicated that follow-up care providers often do not want to receive the large volume of information found in a copy of a patient's plan of care, we do not believe that follow-up care providers will request additional documentation for most discharged or transferred patients. For purposes of this analysis only, we assume that follow-up care providers and facilities will only request additional documentation for 10 percent of an affected HHA's discharged or transferred patients.

(18 million patients × .1 affected HHAs = 1,800,000 patients in affected HHAs)

(1,800,000 patients in affected HHAs × .1 discharged or transferred patients who require additional documentation = 180,000 patients)

Based on the above calculations, we estimate that up to 180,000 requests for additional information will be made upon effected HHAs. We estimate that it will take 15 minutes to process each request and either print and fax, or otherwise send the additional requested documentation, for a total of 45,000 hours per year (180,000 requests × .25 hours per request) at a cost of $1,485,000 (45,000 hours × $33 general office clerk hourly rate). Thus, we estimate compliance with this new CoP costs HHAs approximately $215 million annually ($213.4 million to assist patients in selecting follow-up post-acute care providers and to develop a discharge or transfer summary for each patient + $1.5 million to process and send additional requested information).

The information collection request related to the home health agency CoPs (OMB Control Number 0938–1299) will be revised and sent to OMB.

C. ICRs Regarding Critical Access Hospital Discharge Planning (§ 485.642)

Currently, the CoPs at § 485.631(c)(2)(ii) provide that a CAH must arrange for, or refer patients to, needed services that cannot be furnished at the CAH. CAHs are to ensure that adequate patient health records are maintained and transferred as required when patients are referred.

As previously noted, we recognize that there is significant benefit in improving the transfer and discharge requirements from an inpatient acute care facility, such as CAHs and hospitals, to another care environment. We believe that our revisions will reduce the incidence of preventable and costly readmissions, which are often due to avoidable adverse events. In addition, the IMPACT Act requires that hospitals and CAHs take into account quality, resource use data, and other data to assist PAC providers, patients, and the families of patients with discharge planning, while also addressing the treatment preferences of patients and the patient's goals of care. In light of these concerns and the requirements of the IMPACT Act, we are finalizing new CAH discharge planning requirements.

The current CAH CoP at § 485.635(d)(4) requires the CAH to develop a nursing care plan for each inpatient. The Interpretive Guidelines for § 485.635(d)(4) state that the plan includes planning the patient's care while in the CAH as well as planning for transfer to a hospital or a PAC facility or for discharge. Because the CAH discharge planning requirements mirror those for hospitals, we believe that CAHs, like hospitals, are essentially already performing many of the requirements and estimate the burden to be minimal. We are assessing burden only for those areas that we believe that CAHs are not already doing under the current requirements of the nursing care plan at § 485.635(d)(4).

The new requirements at § 485.642(a) require that the CAH's discharge planning process must identify, at an early stage of hospitalization, those patients who are likely to suffer adverse health consequences upon discharge in the absence of adequate discharge planning and must provide a discharge planning evaluation for those patients so identified as well as for other patients upon the request of the patient, patient's representative, or patient's physician.

We also are requiring that each CAH's discharge planning process must:

- Be made on a timely basis to ensure that appropriate arrangements for post-CAH care will be made before discharge and to avoid unnecessary delays in discharge, a discharge planning evaluation must include an evaluation of a patient's likely need for appropriate post-CAH services, including, but not limited to, hospice care services, post-CAH extended care services, and home health services, and non-health care services and community based care providers, and must also determine the availability of the appropriate services as well as the patient's access to those services;
- That the discharge planning evaluation must be included in the patient's medical record for use in establishing an appropriate discharge plan and the results of the evaluation must be discussed with the patient (or the patient's representative);
- Upon the request of a patient's physician, the CAH must arrange for the development and initial implementation of a discharge plan for the patient;
- That any discharge planning evaluation or discharge plan required under this paragraph must be developed by, or under the supervision of, a registered nurse, social worker, or other appropriately qualified personnel;
- That the CAH's discharge planning process must require regular re-evaluation of the patient's condition to identify changes that require modification of the discharge plan. The discharge plan must be updated, as needed, to reflect these changes; and
- That the CAH must assess its discharge planning process on a regular basis. The assessment must include ongoing, periodic review of a representative sample of discharge plans, including those patients who were readmitted within 30 days of a previous admission, to ensure that the plans are responsive to patient post-discharge needs.

The requirement at § 485.642(a)(8) in particular corresponds to the requirements of the IMPACT Act, and is exempted from the application of the PRA pursuant to section 1899B(m) of the Act. Therefore, we are not required to estimate the public reporting burden for information collection requirements for that specific element of this final rule in accordance with chapter 35, title 45 of the United States Code. Nor are we required to undergo the specific public notice requirements of the PRA. Therefore, the estimates we provide in the RIA section of this final rule are essentially identical to those we would estimate under the PRA with respect to the elements set out in section 1899B of the Act.

Whenever a patient is discharged or transferred to another facility, § 485.642(b) requires CAHs to send

necessary medical information to the receiving facility at the time of transfer. The necessary information that the CAH must send to the receiving facility includes all the items listed at § 485.642(b)(1) through (6). Currently, the CoPs at § 485.631(c)(2)(ii) provide that a CAH must arrange for, or refer patients to, needed services that cannot be furnished at the CAH. CAHs are to ensure that adequate patient medical records are maintained and transferred as required when patients are referred. We believe that CAHs are already providing the necessary medical information included under § 485.642(b)(1). Thus, we believe that CAHs are already following most of these requirements and therefore we will not be assessing any additional burden for this section beyond our estimate in the RIA of the one-time cost to CAHs to modify their policies and procedures in order to ensure that they are meeting the requirements of this rule.

V. Regulatory Impact Analysis

A. Statement of Need

All major government regulations should undergo periodic review to ensure that they do not unduly burden regulated entities or the American people, and reflect current knowledge as to regulatory effects. In recent years, we have revised the CoPs and CfCs to reduce the regulatory burden on providers and suppliers. In doing so, we identified obsolete and burdensome regulations that could be eliminated or reformed to improve effectiveness or reduce unnecessary reporting requirements and other costs, with a particular focus on freeing up resources that health care providers, health plans, and states could use to improve or enhance patient health and safety. This final rule focuses on reforms to discharge procedures that will enhance patient health and safety by filling gaps, while providing appropriate flexibility.

In line with HHS' goals to improve interoperability between patients and their health care providers, we are finalizing certain discharge planning requirements for hospitals (including LTCHs and IRFs), HHAs, and CAHs as well as finalizing the hospital patients' rights requirement regarding patient access to medical records. We are also finalizing the requirements of the IMPACT Act for hospitals, HHAs, and CAHs. We believe that these final requirements will empower patients to be active participants in the discharge planning process and will help them to make informed choices about their care, which will lead to more competition, lower costs, and improved quality of care. Furthermore, the IMPACT Act requirements will give patients and their families' access to information that will help them to make informed decisions about their post-acute care, while addressing their goals of care and treatment preferences. Patients and their families who are well informed of their choices of high-quality PAC providers may reduce their chances of being re-hospitalized.

We believe these final requirements will also encourage interoperability, which allows patients to have access and full control over their medical records and encourages the seamless exchange of patient information between health care settings. Ultimately, these final requirements will ensure that a patient's health care information follows them after discharge from a hospital or PAC provider to their receiving health care facility, whether that be their primary care physician or a SNF.

Furthermore, discharge planning is an important component of successful transition from hospital and PAC settings, as we have previously discussed. It is universally agreed to be an essential function of hospitals. The transition may be to a patient's home (with or without PAC services), SNF or nursing home, LTCH, rehabilitation facility, assisted living center, hospice or a variety of other settings. The location to which a patient may be discharged should be based on the patient's clinical care requirements, available support network, and patient and caregiver (as appropriate) treatment preferences and goals of care.

Although the current hospital discharge planning process meets the needs of many inpatients released from the acute care setting, some discharges result in less-than optimal outcomes for patients, including complications and adverse events that lead to hospital readmissions. Reducing avoidable hospital readmissions and patient complications presents an opportunity for improving the quality and safety of patient care, while potentially reducing health care costs by focusing requirements on cases where risks are highest and by allowing providers to focus resources on such cases.

Executive Order 13563 on Improving Regulation and Regulatory Review expressly states, in its section on retrospective review, that ''agencies shall consider how best to promote retrospective analysis of rules that may be outmoded, ineffective, insufficient, or excessively burdensome, and to modify, streamline, expand, or repeal them in accordance with what has been learned.'' This final rule applies that mandate to discharge planning.

The provisions of the IMPACT Act that require hospitals, CAHs, and PAC providers take into account quality measures and resource use and other measures to assist patients and their families during the discharge planning process will encourage patients and their families to become active participants in the planning of their transition from the hospital to the PAC setting (or between PAC settings). This requirement will allow patients and their families' access to information that will help them to make informed decisions about their post-acute care, while addressing their goals of care and treatment preferences. Patients and their families that are well informed of their choices of high-quality PAC providers may reduce their chances of being re-hospitalized.

Equally importantly, the necessity of meeting this new legislative requirement provides an opportunity to meet the requirement for retrospective review of an important set of regulatory requirements that have not been systematically reviewed in decades. The importance of this retrospective review has been underscored by recent findings on health care delivery problems related to hospitalization, including discharge and readmissions, indicating that major problems exist. For example, the Institute of Medicine study *To Err is Human* found that failure to properly manage and reconcile medications is a major problem in hospitals (see summary discussion at *https://iom.nationalacademies.org/Reports/1999/To-Err-is-Human-Building-A-Safer-Health-System.aspx*.).

The comments and our responses to the Collection of Information (COI) Requirements and the Regulatory Impact Analysis (RIA) sections are as follows.

Comment: Many commenters stated that we underestimated the implementation cost for the proposed requirements for hospitals and, particularly, CAHs. They stated that many of the proposed requirements were burdensome and overly prescriptive and that we underestimated the cost of hiring new staff, training existing staff, and updating and changing EHRs.

Response: We have significantly scaled back our proposed requirements and are finalizing a more limited set of discharge planning and other requirements as explained throughout the preceding preamble discussion. There are more than a dozen areas where this final rule limits and reduces costs along the lines suggested by

commenters. For example, commenters presented evidence that our proposed requirements would impose unreasonable burdens on HHAs in obtaining involvement of patients' physicians in discharge planning, and on hospitals in obtaining and using PDMP information. We greatly appreciate the detailed comments we received and the regulatory improvements that they recommended. In the responses that follow, we address primarily those comments focusing specifically on the collection of information requirements and regulatory impact analysis sections of this final rule, or involving particularly costly or cost-saving issues. These are only a fraction of those dealing with costs or burdens that are already addressed in the preamble.

Comment: Regarding the changes to the HHA requirements, one commenter pointed out that we did not estimate the cost of training clinicians to understand and effectively put into practice the new policies and procedures. The commenter also noted the need for CMS to calculate the cost for changes to an HHA's electronic health records to incorporate the revisions to the rule here.

Response: We have not estimated training costs since we believe that training related to changes in policies and procedures or to improve implementation of existing policies and procedures is an ongoing process in HHAs. In this final rule we have focused on ways to make minor modifications to existing processes that can be implemented with minimal training. For the costs to an HHA's electronic health records, we have removed the list of specific information that must be included in the discharge or transfer summary. The current HHA CoPs at § 484.110 already require HHAs to send a discharge or transfer summary to the receiving provider, so the software used by HHAs to complete this task already exists. As HHAs are already required to prepare and send a transfer or discharge summary, we do not believe that there are substantial additional costs, not already accounted for in section IV ''Collection of Information Requirements'' of this final rule that should be included in our analysis.

Comment: One commenter requested that we calculate the costs for the time required for an HHA physical therapist to create exercise and activity recommendations for patients recovering from orthopedic or neurologic injuries at home.

Response: We do not believe that such costs are related to the new requirements finalized here, so we have not included estimates in the COI or RIA sections.

Comment: Several commenters disagreed with our estimates on the amount of time that it would take an HHA to develop a discharge plan per patient. One commenter stated that we have underestimated the time required of an RN or physical therapist to complete the HHA standards finalized here. The commenter believes that it would take 10 to 15 minutes, not 5, for a nurse or therapist to assemble all of the information, review the medication list for accuracy, review the goals for completeness, and draft the recommendations for care following discharge.

Response: We agree with the commenters and have made the relevant adjustments in section IV ''Collection of Information Requirements'' of this final rule to use an estimate of 10 minutes. We chose 10 minutes because we believe that there will be many relatively uncomplicated cases where 5 minutes would be sufficient, and relatively few where 15 minutes would be necessary, especially since the final rule provisions streamline and reduce the burden compared to the more onerous provisions in the proposed rule that these commenters reviewed. We note that the proposed rule would have shown total information collection burden costs of over $550 million annually had this estimate been more realistic in the Discharge proposed rule.

Comment: Numerous commenters argued that we should add additional occupational specialties to the hospital discharge planning team. Among the categories recommended were physical therapy, nutrition, mental health, dental, durable medical equipment, and others. These commenters argued that some patients would have specialized needs in such categories of subsequent care.

Response: We disagree with the commenters and have added none of the recommended categories. This would have added immensely to the complexity and cost of the discharge planning process. It is the function of the discharge experts already used by each hospital (usually including an expert RN or social worker) to identify such needs, as pertinent to each patient, and tailor the discharge plan to that patient.

B. Overall Impact

We have examined the impacts of this rule as required by Executive Order 12866 on Regulatory Planning and Review (September 30, 1993), Executive Order 13563 on Improving Regulation and Regulatory Review (January 18, 2011), the Regulatory Flexibility Act (RFA) (September 19, 1980, Pub. L. 96–354), section 1102(b) of the Social Security Act, section 202 of the Unfunded Mandates Reform Act of 1995 (March 22, 1995; Pub. L. 104–4), Executive Order 13132 on Federalism (August 4, 1999), the Congressional Review Act (5 U.S.C. 804(2)), and Executive Order 13771 on Reducing Regulation and Controlling Regulatory Costs (January 30, 2017).

Executive Orders 12866 and 13563 direct agencies to assess all costs and benefits of available regulatory alternatives and, if regulation is necessary, to select regulatory approaches that maximize net benefits (including potential economic, environmental, public health and safety effects, distributive impacts, and equity). Section 3(f) of Executive Order 12866 defines a ''significant regulatory action'' as an action that is likely to result in a rule: (1) Having an annual effect on the economy of $100 million or more in any 1 year, or adversely and materially affecting a sector of the economy, productivity, competition, jobs, the environment, public health or safety, or state, local or tribal governments or communities (also referred to as ''economically significant''); (2) creating a serious inconsistency or otherwise interfering with an action taken or planned by another agency; (3) materially altering the budgetary impacts of entitlement grants, user fees, or loan programs or the rights and obligations of recipients thereof; or (4) raising novel legal or policy issues arising out of legal mandates, the President's priorities, or the principles set forth in the Executive Order.

A regulatory impact analysis (RIA) must be prepared for major rules with economically significant effects ($100 million or more in any 1 year). We estimate that this rulemaking is ''economically significant'' as measured by the $100 million threshold, and hence also a major rule under the Congressional Review Act. Accordingly, we have prepared an RIA that to the best of our ability presents the costs and benefits of the rulemaking. This final rule will create both one-time and annual costs for hospitals, CAHs and HHAs. The financial costs are summarized in Table 1.

TABLE 1—SECTION-BY-SECTION ECONOMIC IMPACT ESTIMATES

Provider/supplier and description of proposed provisions	Number of affected entities	Estimated costs ($ millions)
Annual		
Hospitals (§ 482.43)	4,900	(*)
HHAs: Discharge Planning Process(§ 484.58)	12,600	213.4
HHAs: Requests for Information (§ 484.58)	12,600	1.5
Total		214.9
One-time		
Hospitals (§ 482.43)	4,900	17.7
CAHs (§ 485.642)	1,353	1.9
HHAs (§ 484.58)	12,600	10.8
Cost of reviewing final rule	18,853	16.1
Total		46.5

* Less than $1 million.

C. Anticipated Effects

1. Effects on Hospitals (Including LTCHs and IRFs), CAHs, and HHAs

We have accounted for the regulatory impact of these changes through the analysis of costs contained in the ICR sections previously mentioned in this final rule. We believe these estimates encompass most additional burden on hospitals, CAHs, and HHAs, with the exception of the following one-time costs to review the revised requirements and adjust internal procedures to assure compliance, particularly in the area of providing quality information to patients for multiple providers of post-discharge services. Any burden associated with the changes to the CoPs not accounted for in the ICR section or in the RIA section was omitted because we believe it would constitute an usual and customary business practice and would not be subject to the PRA in accordance with 5 CFR 1320.3(b)(2). Nor would it constitute an added cost for purposes of RIA estimates if we added a regulatory requirement that reflected existing practices and workload. We note that we do not estimate costs for the newly added requirement to present quality and cost information to those hospital patients who face a decision on selection of post-discharge providers. In our view, hospitals already counsel patients on these choices, and the availability of written quality information will not add significantly to the time involved, and may in some cases reduce it (the information, of course, would only be presented as pertinent to the particular decisions facing particular patients). Indeed, all providers affected by this rule already have access to quality information from the CMS websites Hospital Compare, Nursing Home Compare and Home Health Compare, as well as other public and private websites and their own knowledge of local providers, and presumably many or most use this information as appropriate to counsel patients.

Hospitals will need to review their current policies and procedures and update them so that they comply with the modified requirements, which will be a one-time burden on each hospital. We estimate that an administrator will spend 8 hours on this activity for a total of 8 hours per hospital at a cost of $1,680 (8 hours × $210 for an administrator's hourly salary cost), together with an RN or equivalent for an additional 8 hours at a cost of $568 (8 hours × $71 for an RN salary cost). Lawyer and physician time will also be used. We assume 4 hours of legal time at $136 an hour for a cost of $544 and 4 hours of physician time at $203 an hour for a cost of $812. For all hospitals to comply with this requirement, we estimate a total one-time cost of approximately $17.7 million (4,900 hospitals × $3,604 ($1,680 plus $568 plus $544 plus $812 = $2,780)).

We are establishing a new standard at § 484.58(a), ''Discharge planning process,'' to require that the HHA's discharge planning process provide certain information to those patients who are discharged or transferred to another post-acute care provider in order to assist patients and families in selecting a provider that meets the patient's needs and goals. HHAs will need to review their current policies and procedures and update them so that they comply with the requirements in § 484.58(a), which will be a one-time burden on the HHA. We estimate that this will require an administrator using the average hourly salary of a medical and health services manager as determined by the BLS, doubled to account for fringe benefits and overhead. We estimate that the administrator will spend 8 hours on this activity for a total of 8 hours per HHA at a cost of $856 (8 hours × $107 for an administrator's hourly salary). For all HHAs to comply with this requirement, we estimate a total one-time cost of approximately $10.8 million (12,600 HHAs × $856).

The requirement at § 485.642(a)(8), which is associated with the IMPACT Act, will require CAHs to review their current policies and procedures and update them so that they comply with the new requirements, which will be a one-time burden on the CAH. We estimate that the administrator will spend 8 hours on this activity for a total of 8 hours per CAH at a cost of $856 (8 hours × $107 for an administrator's hourly salary cost), together with an RN or equivalent for an additional 8 hours at a cost of $568 (8 hours × $71 for an RN salary cost). The total burden hours are 21,648 (16 hours × 1,353 CAHs). For all CAHs to comply with this requirement, we estimate a total one-time cost of approximately $1.9 million (1,353 CAHs × ($856 plus $568)).

Our estimates of the effects of this regulation are subject to significant uncertainty. While HHS is confident that these changes will provide flexibilities to facilities that will minimize cost increases, there are uncertainties about the magnitude of the discussed effects. However, we have based our overall assumptions and best estimates on our ongoing experiences with hospitals, HHAs, and CAHs in these matters.

In addition, as we previously explained, there may be significant additional health benefits, such as the reduction in patient readmissions after discharges and the reduction of other post-discharge patient complications. The Discharge Planning proposed rule was estimated to have total first year costs of $454 million (80 FR 68148), and annual costs thereafter of $396 million. As previously discussed, both these numbers would have been about $100 million higher if the time needed for HHA discharge functions had been estimated more realistically. This final rule, in contrast, has estimated total first year costs of $262 million and annual costs thereafter of $215 million. This reduction of costs by more than half reflects some downward re-estimates, but mainly our efforts to remove overly prescriptive and costly process requirements that had originally been proposed. It also reflects the many comments we received pointing out ways to improve the rule. These changes show both the benefits of the public comment process under the Administrative Procedure Act, and the focus of CMS in developing final rules in complying with the goals of the laws and Executive Orders previously discussed, especially Executive Orders 12866, 13563 and 13771.

2. Effects on Small Entities

The Regulatory Flexibility Act (RFA) requires agencies to analyze options for regulatory relief of small entities, if a rule has a significant impact on a substantial number of small entities. For purposes of the RFA, we estimate that the great majority of the providers that will be affected by our rules are small entities as that term is used in the RFA. The great majority of hospitals and most other health care providers and suppliers are small entities, either by being nonprofit organizations or by meeting the SBA definition of a small business. Accordingly, the usual practice of HHS is to treat all providers and suppliers as small entities in analyzing the effects of our rules.

As shown in Table 1, we estimate that the recurring costs of this final rule will cost affected entities approximately $215 million a year. Virtually all of these costs will impact HHAs. Total annual revenues of HHAs are approximately $100 billion a year (see Anne B. Martin et al, ''National Health Care Spending In 2017,'' *Health Affairs,* January 2019) and there are about 12,600 HHAs. Hence, the average cost per HHA would be about $17,000, about one fifth of one percent of annual revenues. All HHAs are not ''average'' in size, and about 2,000 of them have fewer than 10 employees. But our annual cost estimates are directly proportional to number of patients, so costs to even the smallest HHAs would be well under one percent of annual revenues. The HHS threshold used for determining significant economic effect on small entities is 3 percent of costs. Accordingly, after a review of cost effects on HHAs, hospitals, and CAHs, we have determined that this rule will not have a significant economic impact on a substantial number of small entities, and certify that a Final Regulatory Flexibility Analysis is not required. Regardless, this RIA and the remainder of the preamble together meet the RFA requirements for such an analysis. In particular, we call attention to the many places in the non-RIA sections of the preamble where public comments helped us to analyze particular options and reject those that would have unnecessarily placed far higher burdens on HHAs or other entities. Specifically, our rejection of options that would have required consultations with health care professionals of many kinds, rather than consultations only as necessary for a particular patient, avoided very substantial costs on small entities.

Under the proposed rule costs to hospitals would have exceeded $100 million annually. We note that quite apart from the gross amount of such compliance costs being a small fraction of revenues or costs of affected entities, net costs will be far smaller. Payment for hospital inpatient services for Medicare beneficiaries is paid primarily according to Medicare severity diagnosis-related groups (MS–DRGs), and MS–DRGs for hospital procedures are periodically revised to reflect the latest estimates of costs from hospitals themselves, as well as from other sources. Hence, absent offsetting effects from other payment changes, and depending on hospitals' success in controlling overall costs, some portion of any hospital costs will be recovered from Medicare. Moreover, hospitals can and do periodically revise their charges to private insurance carriers (subject in part to negotiations over rates) and for the approximately half of all patients who are ''private pay'' cost increases can be partially offset in that way. As for CAHs, they are largely paid on a cost basis for their Medicare patients, and will presumably be able to recoup additional costs through periodic adjustments to public and private payment rates. Under this final rule hospital and CAH costs have been essentially eliminated, and hence we anticipate no impact on public and private payment rates. Finally, HHAs also obtain periodic changes in payment rates from both public and private payers. In all three cases, we have no way to predict precise future pathways or exact timing however, we believe that most of the recurring costs will be recovered through payments from third party payers, public and private.

In addition, section 1102(b) of the Act requires us to prepare a regulatory impact analysis if a rule may have a significant impact on the operations of a substantial number of small rural hospitals. This analysis must conform to the provisions of section 604 of the RFA. For purposes of section 1102(b) of the Act, we define a small rural hospital as a hospital that is located outside of a metropolitan statistical area and has fewer than 100 beds. For the preceding reasons, we have determined that this rule will not have a significant impact on the operations of a substantial number of small rural hospitals.

Section 202 of the Unfunded Mandates Reform Act of 1995 (UMRA) also requires that agencies assess anticipated costs and benefits before issuing any rule whose mandates require spending in any 1 year of $100 million in 1995 dollars, updated annually for inflation. In 2019, that threshold is approximately $154 million. Although this rule does not technically require HHAs to incur the costs unless they participate in Medicare, as a practical matter few HHAs could remain in business without participating in Medicare and these costs exceed this threshold in early years before subsequent payment increases take increased costs into effect. Mandated spending for CAHs, in contrast, is largely reimbursed on a cost basis and would not count as an unfunded mandate even in early years. This RIA and the other preamble sections together meet the UMRA requirements for analysis of the costs to these providers.

Executive Order 13132 establishes certain requirements that an agency must meet when it issues a proposed rule (and subsequent final rule) that would impose substantial direct requirement costs on state and local governments, preempt state law, or otherwise have federalism implications. This final rule will not have a substantial direct effect on state or local governments, preempt state law, or otherwise have federalism implications.

3. Effects on Patients and Medical Care Costs

Patients in all three settings are the major beneficiaries of this rule. Research cited earlier in this preamble strongly

suggests that there would be reductions in morbidity and mortality from improving services to these patients through improved discharge planning. We are, however, unable to quantify either the volume or dollar value of these expected benefits. We are not aware of reliable empirical data on the benefits of improved discharge planning. In addition, there are multiple initiatives affecting the same patients (for example, the Hospital Readmissions Reduction Program, the Medicare and Medicaid EHR Incentive Program, and the Accountable Care Organizations under the Medicare Shared Savings Program). This makes it challenging to sort out the separable benefits of this rule. Nonetheless, the number of patients potentially benefitting is significant.

There are existing requirements in place for discharge planning and for reducing adverse events such as hospital readmissions, both in regulations governing patient care and in payment regulations, but little or no data exist on the effectiveness of these requirements compared to the normal effects of good medical practice. The changes that will be implemented by this rule are an additional overlay on top of existing practices and requirements. It is challenging to disentangle all these overlapping factors. Therefore, existing data demonstrate that even small improvements can have effects as large as those previously suggested in this rule. For example, one meta-analysis showed that transitional care that promotes the safe and timely transfer of patients from hospital to home has been proven to be highly effective in reducing readmissions.[1]

4. Regulatory Review Cost Estimate

One of the costs of compliance with a final rule is the necessity for affected entities to review the rule in order to understand what it requires and what changes the entity will have to make to come into compliance. The particular staff involved in such a review will vary from provider to provider. We believe that a good approximation for a range of staff would be a person such as a medical and health service manager. Using the wage information from the BLS for medical and health service managers (Code 11–9111), we estimate that the cost of reviewing this rule is $107 per hour, including overhead and fringe benefits *https://www.bls.gov/oes/2017/may/oes_nat.htm.* Assuming an average reading speed, we estimate that it will take approximately 4 hours for each of the staff involved to review this final rule and its relevant sections and that on average two persons on staff will engage in this review (more for hospitals and CAHs and fewer for HHAs). For each entity that reviews the rule, the estimated cost is therefore $856 (4 hours each × 2 staff × $107 per hour each). Therefore, we estimate that the total cost of reviewing this rule, assuming two reviewers per affected entity, is $16.1 million ($856 × 18,853 affected entities).

D. Alternatives Considered

As we previously stated in this final rule, some of these provisions are mandated under the IMPACT Act; therefore, no major alternatives were considered for those provisions. For the other provisions, we considered a wide range of alternatives, but determined that none of them would result in substantial benefits at a reasonable cost.

For all provisions, we attempted to minimize unnecessarily prescriptive methods or procedures, and to avoid any unnecessarily costly and burdensome requirements. Of particular importance for this final rule, the public comments were exceptionally useful in identifying weak or unjustified provisions in the proposed rule as well as in identifying alternatives. These alternatives are discussed throughout the preamble. The three most costly alternatives that we considered and rejected were requiring specific post-discharge procedures for every patient, requiring that discharge plans be prepared and revised on specific hourly schedules for every patients, and requiring direct individual consultation with a wide range of health care professionals for every patient.

For the alternative of specific post-discharge follow-up procedures, we concluded that the range of procedures was so great (including such very low cost procedures as automatically generated text or email reminders about medication compliance, and such high cost procedures as home visits by nurses), and the range of patient situations so wide (including in many cases no likely benefit from follow-up and in others no efficient way to predict likely benefits), that we could devise no reasonable or practicable requirement that would sensibly apply to all or most patients. Of course, we encourage providers to use follow-up procedures they find cost-effective for particular categories of patients.

The alternative of requiring specific hourly deadlines for beginning a discharge plan would have created immense costs due simply to the myriad circumstances of hospital patients, as described by many examples in the comments. Likewise, commenters identified no consequential benefits, and major costs, were we to impose discharge planning on ambulatory care not even involving an overnight hospital stay, and involving such low risk procedures as providing tooth fillings, cataract surgery, and carpal tunnel surgery.

The third alternative arose from comments from a number of professional associations and individual professionals asking that we mandate use of their particular professions in discharge planning for every patient. These would also have been very costly to impose. As previously discussed, we found no reason to believe that routinely using these professionals in all discharge planning would have provided consequential benefits over and above benefits from selective consultation where indicated by patient-specific conditions.

E. Cost to the Federal Government

When these requirements are finalized, CMS will update the interpretive guidance, update the survey process, and provide training. In order to make these three changes, we anticipate initial, one-time federal startup costs at 4 or 5 person-years, and hence total cost of approximately 1 million dollars including overhead costs and fringe benefits. CMS plans to rely on CMS program management resources to support these costs. The continuing annual costs (survey process-recertifications, enforcement by states or accredited organizations, appeals, AO) will not change from current levels.

F. Accounting Statement

As required by OMB Circular A–4 (available at *https://www.whitehouse.gov/sites/whitehouse.gov/files/omb/circulars/A4/a-4.pdf*), in Table 2 we present an accounting statement showing the classification of the costs and benefits associated with the provisions of this final rule. The accounting statement is based on estimates provided in this regulatory impact analysis. We have used 10 years as an estimating horizon, and used low and high estimates that are 25 percent lower or higher than our primary estimate. We note that the accounting statement for the proposed rule showed annual costs of about $420 million in 2015 dollars, and that the changes made in this final rule have cut that cost in half. This reduction is even larger in real terms because public comments showed us that the Discharge

[1] Kim J. Verhaegh et al, ''Transitional Care Interventions Prevent Hospital Readmissions for Adults with Chronic Illnesses,'' *Health Affairs,* 33, no. 9 (2014):1531 through 1539.

proposed rule would have been about $100 million annually more costly than estimated.

TABLE 2—ACCOUNTING STATEMENT: CLASSIFICATION OF ESTIMATED COSTS AND BENEFITS

[$ in millions]

Category	Primary estimate	Low estimate	High estimate	Units		
				Year dollars	Discount rate	Period covered
Benefits—Qualitative not quantitative or monetized	Potential Reductions in morbidity, mortality, and medical costs for hospital, HHA, and CAH patients.					
Costs—Annualized Monetized Costs of Discharge Planning to Medical Care Providers	220	170	280	2017	7%	2019–2028
	220	170	280	2017	3%	2019–2028
Transfers	None.					

In accordance with the provisions of Executive Order 12866, this rule was reviewed by the Office of Management and Budget.

G. Regulatory Reform Analysis Under Executive Order 13771

Executive Order 13771, titled Reducing Regulation and Controlling Regulatory Costs, was issued on January 30, 2017 and requires that the costs associated with significant new regulations ''shall, to the extent permitted by law, be offset by the elimination of existing costs associated with at least two prior regulations.'' This final rule imposes costs and therefore is considered to be a regulatory action under Executive Order 13771. We estimate that this rule will impose annualized costs of approximately $175 million discounted relative to 2016 over a perpetual time horizon.

H. Congressional Review Act

Pursuant to the Congressional Review Act (5 U.S.C. 801 *et seq.*), the Office of Information and Regulatory Affairs designated this rule as a major rule, as defined by 5 U.S.C. 804(2). As such, this rule has been transmitted to the Congress and the Comptroller General for review.

List of Subjects

42 CFR Part 482

Grant Programs-health, Hospitals, Medicaid, Medicare, Reporting and recordkeeping requirements.

42 CFR Part 484

Health facilities, Health professions, Medicare, Reporting and recordkeeping requirements.

42 CFR Part 485

Grant programs-health, Health facilities, Medicaid, Privacy, Reporting and recordkeeping requirements.

For the reasons set forth in the preamble, the Centers for Medicare and Medicaid Services amends 42 CFR chapter IV as set forth below:

PART 482—CONDITIONS OF PARTICIPATION FOR HOSPITALS

■ 1. The authority citation for part 482 is revised to read as follows:

Authority: 42 U.S.C. 1302, 1395hh, 1395rr, and 1395lll unless otherwise noted.

■ 2. Section 482.13 is amended by revising paragraph (d)(2) to read as follows:

§ 482.13 Condition of participation: Patient's rights.

* * * * *

(d) * * *

(2) The patient has the right to access their medical records, including current medical records, upon an oral or written request, in the form and format requested by the individual, if it is readily producible in such form and format (including in an electronic form or format when such medical records are maintained electronically); or, if not, in a readable hard copy form or such other form and format as agreed to by the facility and the individual, and within a reasonable time frame. The hospital must not frustrate the legitimate efforts of individuals to gain access to their own medical records and must actively seek to meet these requests as quickly as its record keeping system permits.

* * * * *

■ 3. Section 482.43 is revised to read as follows:

§ 482.43 Condition of participation: Discharge planning.

The hospital must have an effective discharge planning process that focuses on the patient's goals and treatment preferences and includes the patient and his or her caregivers/support person(s) as active partners in the discharge planning for post-discharge care. The discharge planning process and the discharge plan must be consistent with the patient's goals for care and his or her treatment preferences, ensure an effective transition of the patient from hospital to post-discharge care, and reduce the factors leading to preventable hospital readmissions.

(a) *Standard: Discharge planning process.* The hospital's discharge planning process must identify, at an early stage of hospitalization, those patients who are likely to suffer adverse health consequences upon discharge in the absence of adequate discharge planning and must provide a discharge planning evaluation for those patients so identified as well as for other patients upon the request of the patient, patient's representative, or patient's physician.

(1) Any discharge planning evaluation must be made on a timely basis to ensure that appropriate arrangements for post-hospital care will be made before discharge and to avoid unnecessary delays in discharge.

(2) A discharge planning evaluation must include an evaluation of a patient's likely need for appropriate post-hospital services, including, but not limited to, hospice care services, post-hospital extended care services, home health services, and non-health care services and community based care providers, and must also include a determination of the availability of the appropriate services as well as of the patient's access to those services.

(3) The discharge planning evaluation must be included in the patient's medical record for use in establishing an appropriate discharge plan and the results of the evaluation must be discussed with the patient (or the patient's representative).

(4) Upon the request of a patient's physician, the hospital must arrange for the development and initial implementation of a discharge plan for the patient.

(5) Any discharge planning evaluation or discharge plan required under this paragraph must be developed by, or under the supervision of, a registered nurse, social worker, or other appropriately qualified personnel.

(6) The hospital's discharge planning process must require regular re-evaluation of the patient's condition to identify changes that require modification of the discharge plan. The discharge plan must be updated, as needed, to reflect these changes.

(7) The hospital must assess its discharge planning process on a regular basis. The assessment must include ongoing, periodic review of a representative sample of discharge plans, including those patients who were readmitted within 30 days of a previous admission, to ensure that the plans are responsive to patient post-discharge needs.

(8) The hospital must assist patients, their families, or the patient's representative in selecting a post-acute care provider by using and sharing data that includes, but is not limited to, HHA, SNF, IRF, or LTCH data on quality measures and data on resource use measures. The hospital must ensure that the post-acute care data on quality measures and data on resource use measures is relevant and applicable to the patient's goals of care and treatment preferences.

(b) *Standard: Discharge of the patient and provision and transmission of the patient's necessary medical information.* The hospital must discharge the patient, and also transfer or refer the patient where applicable, along with all necessary medical information pertaining to the patient's current course of illness and treatment, post-discharge goals of care, and treatment preferences, at the time of discharge, to the appropriate post-acute care service providers and suppliers, facilities, agencies, and other outpatient service providers and practitioners responsible for the patient's follow-up or ancillary care.

(c) *Standard: Requirements related to post-acute care services.* For those patients discharged home and referred for HHA services, or for those patients transferred to a SNF for post-hospital extended care services, or transferred to an IRF or LTCH for specialized hospital services, the following requirements apply, in addition to those set out at paragraphs (a) and (b) of this section:

(1) The hospital must include in the discharge plan a list of HHAs, SNFs, IRFs, or LTCHs that are available to the patient, that are participating in the Medicare program, and that serve the geographic area (as defined by the HHA) in which the patient resides, or in the case of a SNF, IRF, or LTCH, in the geographic area requested by the patient. HHAs must request to be listed by the hospital as available.

(i) This list must only be presented to patients for whom home health care post-hospital extended care services, SNF, IRF, or LTCH services are indicated and appropriate as determined by the discharge planning evaluation.

(ii) For patients enrolled in managed care organizations, the hospital must make the patient aware of the need to verify with their managed care organization which practitioners, providers or certified suppliers are in the managed care organization's network. If the hospital has information on which practitioners, providers or certified supplies are in the network of the patient's managed care organization, it must share this with the patient or the patient's representative.

(iii) The hospital must document in the patient's medical record that the list was presented to the patient or to the patient's representative.

(2) The hospital, as part of the discharge planning process, must inform the patient or the patient's representative of their freedom to choose among participating Medicare providers and suppliers of post-discharge services and must, when possible, respect the patient's or the patient's representative's goals of care and treatment preferences, as well as other preferences they express. The hospital must not specify or otherwise limit the qualified providers or suppliers that are available to the patient.

(3) The discharge plan must identify any HHA or SNF to which the patient is referred in which the hospital has a disclosable financial interest, as specified by the Secretary, and any HHA or SNF that has a disclosable financial interest in a hospital under Medicare. Financial interests that are disclosable under Medicare are determined in accordance with the provisions of part 420, subpart C, of this chapter.

PART 484—HOME HEALTH SERVICES

■ 4. The authority citation for part 484 continues to read as follows:

Authority: 42 U.S.C. 1302 and 1395(hh) unless otherwise indicated.

■ 5. Section 484.58 is added to read as follows:

§ 484.58 Condition of participation: Discharge planning.

(a) *Standard: Discharge planning.* An HHA must develop and implement an effective discharge planning process. For patients who are transferred to another HHA or who are discharged to a SNF, IRF or LTCH, the HHA must assist patients and their caregivers in selecting a post-acute care provider by using and sharing data that includes, but is not limited to HHA, SNF, IRF, or LTCH data on quality measures and data on resource use measures. The HHA must ensure that the post-acute care data on quality measures and data on resource use measures is relevant and applicable to the patient's goals of care and treatment preferences.

(b) *Standard: Discharge or transfer summary content.* (1) The HHA must send all necessary medical information pertaining to the patient's current course of illness and treatment, post-discharge goals of care, and treatment preferences, to the receiving facility or health care practitioner to ensure the safe and effective transition of care.

(2) The HHA must comply with requests for additional clinical information as may be necessary for treatment of the patient made by the receiving facility or health care practitioner.

PART 485—CONDITIONS OF PARTICIPATION: SPECIALIZED PROVIDERS

■ 6. The authority citation for part 485 is revised to read as follows:

Authority: 42 U.S.C. 1302 and 1395(hh).

■ 7. Section 485.635 is amended by adding paragraph (a)(3)(viii) to read as follows:

§ 485.635 Condition of participation: Provision of services.

* * * * *

(a) * * *

(3) * * *

(viii) Policies and procedures that address the post-acute care needs of patients receiving CAH services.

* * * * *

■ 8. Section 485.642 is added to read as follows:

§ 485.642 Condition of participation: Discharge planning.

A Critical Access Hospital (CAH) must have an effective discharge planning process that focuses on the patient's goals and treatment preferences and includes the patient and his or her caregivers/support person(s) as active partners in the discharge planning for post-discharge care. The discharge planning process and the discharge plan must be consistent with the patient's goals for care and his or her treatment preferences, ensure an effective transition of the patient from the CAH to post-discharge care, and reduce the factors leading to preventable CAH and hospital readmissions.

(a) *Standard: Discharge planning process.* The CAH's discharge planning process must identify, at an early stage of hospitalization, those patients who are likely to suffer adverse health consequences upon discharge in the absence of adequate discharge planning and must provide a discharge planning evaluation for those patients so identified as well as for other patients upon the request of the patient, patient's representative, or patient's physician.

(1) Any discharge planning evaluation must be made on a timely basis to ensure that appropriate arrangements for post-CAH care will be made before discharge and to avoid unnecessary delays in discharge.

(2) A discharge planning evaluation must include an evaluation of a patient's likely need for appropriate post-CAH services, including, but not limited to, hospice care services, post-CAH extended care services, home health services, and non-health care services and community based care providers, and must also include a determination of the availability of the appropriate services as well as of the patient's access to those services.

(3) The discharge planning evaluation must be included in the patient's medical record for use in establishing an appropriate discharge plan and the results of the evaluation must be discussed with the patient (or the patient's representative).

(4) Upon the request of a patient's physician, the CAH must arrange for the development and initial implementation of a discharge plan for the patient.

(5) Any discharge planning evaluation or discharge plan required under this paragraph must be developed by, or under the supervision of, a registered nurse, social worker, or other appropriately qualified personnel.

(6) The CAH's discharge planning process must require regular re-evaluation of the patient's condition to identify changes that require modification of the discharge plan. The discharge plan must be updated, as needed, to reflect these changes.

(7) The CAH must assess its discharge planning process on a regular basis. The assessment must include ongoing, periodic review of a representative sample of discharge plans, including those patients who were readmitted within 30 days of a previous admission, to ensure that the plans are responsive to patient post-discharge needs.

(8) The CAH must assist patients, their families, or the patient's representative in selecting a post-acute care provider by using and sharing data that includes, but is not limited to, HHA, SNF, IRF, or LTCH data on quality measures and data on resource use measures. The CAH must ensure that the post-acute care data on quality measures and data on resource use measures is relevant and applicable to the patient's goals of care and treatment preferences.

(b) *Standard: Discharge of the patient and provision and transmission of the patient's necessary medical information.* The CAH must discharge the patient, and also transfer or refer the patient where applicable, along with all necessary medical information pertaining to the patient's current course of illness and treatment, post-discharge goals of care, and treatment preferences, at the time of discharge, to the appropriate post-acute care service providers and suppliers, facilities, agencies, and other outpatient service providers and practitioners responsible for the patient's follow-up or ancillary care.

Dated: August 20, 2019.

Seema Verma,

Administrator, Centers for Medicare & Medicaid Services.

Dated: September 17, 2019.

Alex M. Azar II,

Secretary, Department of Health and Human Services.

[FR Doc. 2019–20732 Filed 9–25–19; 11:15 am]

BILLING CODE 4120–01–P

FEDERAL REGISTER

Vol. 84 Monday,

No. 189 September 30, 2019

Part IV

Department of Commerce

National Oceanic and Atmospheric Administration

Takes of Marine Mammals Incidental to Specified Activities; Taking Marine Mammals Incidental to a Low-Energy Geophysical Survey in the South Atlantic Ocean; Notice

DEPARTMENT OF COMMERCE

National Oceanic and Atmospheric Administration

RIN 0648–XR056

Takes of Marine Mammals Incidental to Specified Activities; Taking Marine Mammals Incidental to a Low-Energy Geophysical Survey in the South Atlantic Ocean

AGENCY: National Marine Fisheries Service (NMFS), National Oceanic and Atmospheric Administration (NOAA), Commerce.

ACTION: Notice; proposed incidental harassment authorization; request for comments on proposed authorization and possible renewal.

SUMMARY: NMFS has received a request from the Scripps Institute of Oceanography (SIO) for authorization to take marine mammals incidental to a low-energy marine geophysical survey in the South Atlantic Ocean. Pursuant to the Marine Mammal Protection Act (MMPA), NMFS is requesting comments on its proposal to issue an incidental harassment authorization (IHA) to incidentally take marine mammals during the specified activities. NMFS is also requesting comments on a possible one-year Renewal that could be issued under certain circumstances and if all requirements are met, as described in *Request for Public Comments* at the end of this notice. NMFS will consider public comments prior to making any final decision on the issuance of the requested MMPA authorizations and agency responses will be summarized in the final notice of our decision.

DATES: Comments and information must be received no later than October 30, 2019.

ADDRESSES: Comments should be addressed to Jolie Harrison, Chief, Permits and Conservation Division, Office of Protected Resources, National Marine Fisheries Service. Physical comments should be sent to 1315 East-West Highway, Silver Spring, MD 20910 and electronic comments should be sent to *ITP.Egger@noaa.gov.*

Instructions: NMFS is not responsible for comments sent by any other method, to any other address or individual, or received after the end of the comment period. Comments received electronically, including all attachments, must not exceed a 25-megabyte file size. Attachments to electronic comments will be accepted in Microsoft Word or Excel or Adobe PDF file formats only. All comments received are a part of the public record and will generally be posted online at *https://www.fisheries.noaa.gov/permit/incidental-take-authorizations-under-marine-mammal-protection-act* without change. All personal identifying information (*e.g.,* name, address) voluntarily submitted by the commenter may be publicly accessible. Do not submit confidential business information or otherwise sensitive or protected information.

FOR FURTHER INFORMATION CONTACT: Stephanie Egger, Office of Protected Resources, NMFS, (301) 427–8401. Electronic copies of the application and supporting documents, as well as a list of the references cited in this document, may be obtained online at: *https://www.fisheries.noaa.gov/permit/incidental-take-authorizations-under-marine-mammal-protection-act.* In case of problems accessing these documents, please call the contact listed above.

SUPPLEMENTARY INFORMATION:

Background

The MMPA prohibits the ''take'' of marine mammals, with certain exceptions. Sections 101(a)(5)(A) and (D) of the MMPA (16 U.S.C. 1361 *et seq.*) direct the Secretary of Commerce (as delegated to NMFS) to allow, upon request, the incidental, but not intentional, taking of small numbers of marine mammals by U.S. citizens who engage in a specified activity (other than commercial fishing) within a specified geographical region if certain findings are made and either regulations are issued or, if the taking is limited to harassment, a notice of a proposed incidental take authorization may be provided to the public for review.

Authorization for incidental takings shall be granted if NMFS finds that the taking will have a negligible impact on the species or stock(s) and will not have an unmitigable adverse impact on the availability of the species or stock(s) for taking for subsistence uses (where relevant). Further, NMFS must prescribe the permissible methods of taking and other ''means of effecting the least practicable adverse impact'' on the affected species or stocks and their habitat, paying particular attention to rookeries, mating grounds, and areas of similar significance, and on the availability of such species or stocks for taking for certain subsistence uses (referred to in shorthand as ''mitigation''); and requirements pertaining to the mitigation, monitoring and reporting of such takings are set forth.

National Environmental Policy Act

To comply with the National Environmental Policy Act of 1969 (NEPA; 42 U.S.C. 4321 *et seq.*) and NOAA Administrative Order (NAO) 216–6A, NMFS must review our proposed action (*i.e.,* the issuance of an incidental harassment authorization) with respect to potential impacts on the human environment.

This action is consistent with categories of activities identified in Categorical Exclusion B4 (incidental harassment authorizations with no anticipated serious injury or mortality) of the Companion Manual for NOAA Administrative Order 216–6A, which do not individually or cumulatively have the potential for significant impacts on the quality of the human environment and for which we have not identified any extraordinary circumstances that would preclude this categorical exclusion. Accordingly, NMFS has preliminarily determined that the issuance of the proposed IHA qualifies to be categorically excluded from further NEPA review.

We will review all comments submitted in response to this notice prior to concluding our NEPA process or making a final decision on the IHA request.

Summary of Request

On May 15, 2019, NMFS received a request from SIO for an IHA to take marine mammals incidental to conducting a low-energy marine geophysical survey in the Southeast Atlantic Ocean. The application was deemed adequate and complete on August 12, 2019. SIO's request is for take of a small number of 48 species of marine mammals by Level B harassment. Neither SIO nor NMFS expects serious injury or mortality to result from this activity and, therefore, an IHA is appropriate. The planned activity is not expected to exceed one year.

Description of Proposed Activity

Overview

SIO plans to conduct low-energy marine seismic surveys in the Southeast Atlantic Ocean during November–December 2019. The seismic surveys would be conducted to understand the volcanic and tectonic development of Walvis Ridge and Rio Grande Rise in the South Atlantic Ocean. The seismic surveys would be conducted in International Waters with water depths ranging from approximately 500 to 5700 m. The surveys would involve one source vessel, R/V *Thomas G. Thompson* (*Thompson*). The *Thompson* would deploy up to two 45-in^3 GI airguns at a depth of 2–4 m with a

maximum total volume of ~90 in^3 along predetermined tracklines.

Dates and Duration

The R/V *Thompson* would likely depart from Montevideo, Uruguay, on or about November 3, 2019 and would arrive in Walvis Bay, Namibia, on or about 5 December 5, 2019. If the arrival port is Cape Town instead of Walvis Bay, an additional two days would be required for transit. Seismic operations would occur for approximately 14 days. Transit to and from the project area and between surveys would occur from approximately 16 days. Equipment deployment and recovery would take approximately 3 days. Some deviation in timing could result from unforeseen events such as weather, logistical issues, or mechanical issues with the research vessel and/or equipment. Seismic activities would occur 24 hours per day during the proposed survey.

Specific Geographic Region

The majority of the survey would take place in the Southeast Atlantic Ocean between ~33.2°–21° S and 1° W–8° E (see Figure 1). A small survey area is proposed for the Southwest Atlantic Ocean between ~33.2°–34.3° S and 30.8°–31.8° W (see Figure 1). Seismic surveys would occur in five survey areas including Libra Massif in the Southwest Atlantic and Valdivia Bank, Gough, Tristan, and Central survey areas in the Southeast Atlantic; representative survey tracklines are shown in Figure 1.

BILLING CODE 3510–22–P

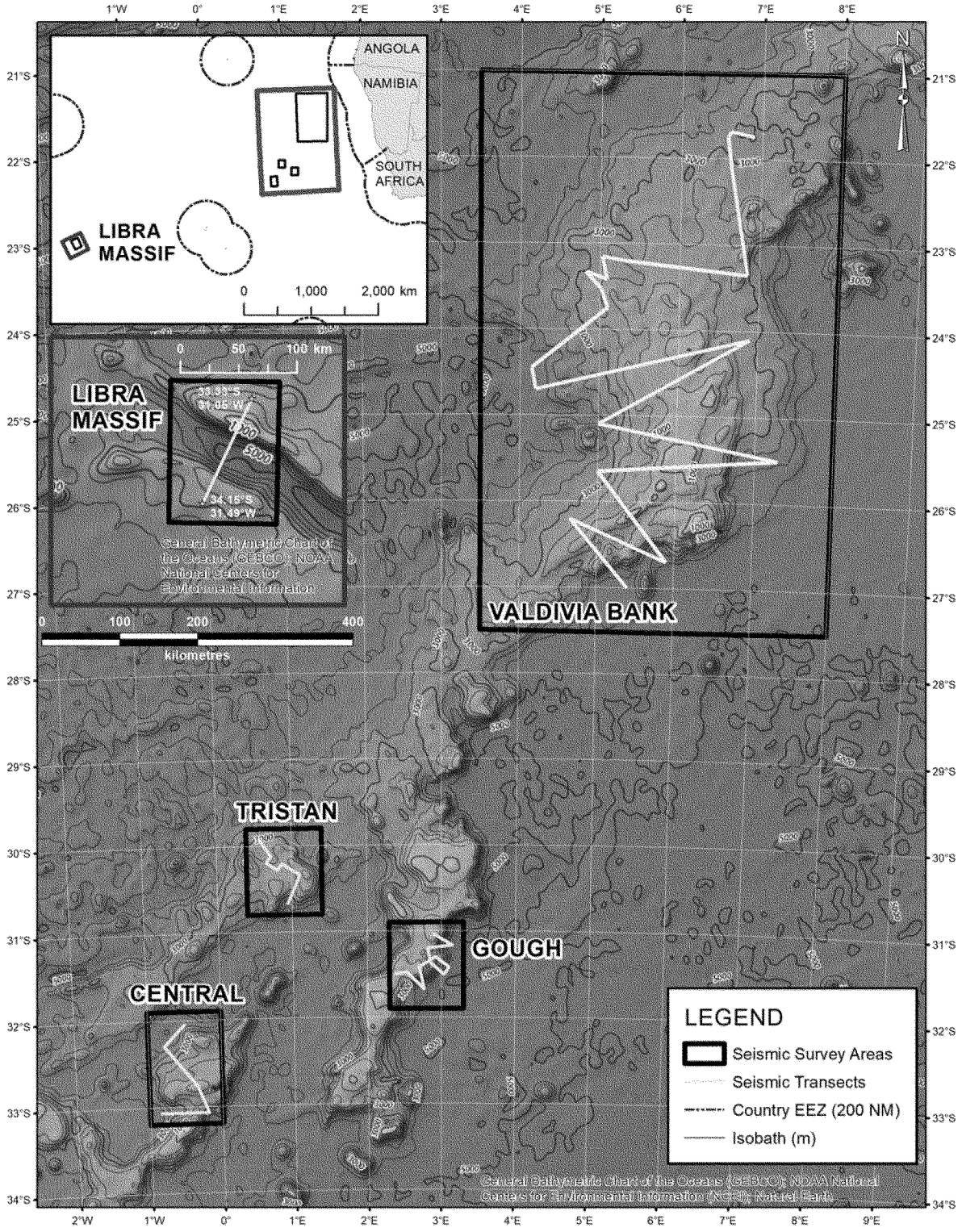

Figure 1. Location of the Proposed Surveys in the Southeast Atlantic Ocean.

BILLING CODE 3510–22–C

Detailed Description of Specific Activity

SIO proposes to conduct low-energy seismic surveys in five areas in the South Atlantic Ocean. Reconnaissance Surveys are planned for three survey areas (Gough, Tristan, Central) and High Quality Surveys are planned to take place along the proposed seismic transect lines in the main survey area (Valdivia Bank) and Libra Massif survey area (Figure 1). However, High-Quality Surveys may be replaced by Reconnaissance Surveys depending on weather conditions and timing (*e.g.,* 10 percent of survey effort at Valdivia Bank is expected to consist of Reconnaissance Surveys). All data acquisition in the Tristan survey area would occur in water >1,000 m deep; all other survey areas have effort in intermediate (100–1,000 m) and deep (>1,000 m) water. Most of the survey effort (97 percent) would occur in water >1,000 m deep. The proposed surveys would be in support of a potential future International Ocean Discovery Program (IODP) project and to improve our understanding of volcanic and tectonic development of oceanic ridges and to enable the selection and analysis of potential future IODP drill sites. To achieve the program's goals, the Principal Investigators propose to collect low-energy, high-resolution multi-channel seismic (MCS) profiles. The proposed cruise would consist of digital bathymetric, echosounding, and MCS surveys.

The procedures to be used for the seismic surveys would be similar to those used during previous seismic surveys by SIO and would use conventional seismic methodology. The surveys would involve one source vessel, R/V *Thompson,* which is managed by University of Washington (UW). The R/V *Thompson* would deploy up to two 45-in^3 GI airguns as an energy source with a maximum total volume of ~90 in^3. The receiving system would consist of one hydrophone streamer, 200 to 1,600 m in length, as described below. As the airguns are towed along the survey lines, the hydrophone streamer would receive the returning acoustic signals and transfer the data to the on-board processing system.

The airgun array would be operated in one of two different types of array modes. The first would be highest-quality survey mode to collect the highest-quality seismic reflection data. The second mode would be a reconnaissance mode, which are quicker and less impacted by adverse weather. The reconnaissance mode also allows for operations to occur in poor weather where the use of streamer longer than 400-m may not be possible safely.

The highest-quality mode is carried out using a pair of 45-in^3 airguns, with airguns spaced 2 m apart at a depth of 2–4 m, with a 400, 800, or 1,600 m hydrophone streamer and with the vessel traveling at to 5 knots (5 kn) to achieve high-quality seismic reflection data. The reconnaissance mode is carried out using either one or two 45-in^3 airguns, with airguns spaced 8 m apart (if 2 are being used) at a water depth of 2–4 m, with a 200 m hydrophone streamer and with the vessel traveling at 8 kn.

Seismic data would be collected first as a single profile over the rift at Libra Massif, the most southeastern edifice of Rio Grande Rise. After crossing the Atlantic, data would be collected over three seamounts (Gough, Tristan, Central) in the ''Guyot Province'' of Walvis Ridge. Approximately 24 hr of seismic profiling is proposed at each location, before moving on to the Valdivia Bank survey area, where most survey effort (75 percent) would occur.

There could be additional seismic operations in the project area associated with equipment testing, re-acquisition due to reasons such as but not limited to equipment malfunction, data degradation during poor weather, or interruption due to shut-down or track deviation in compliance with IHA requirements. To account for these additional seismic operations, 25 percent has been added in the form of operational days, which is equivalent to adding 25 percent to the proposed line km to be surveyed.

In addition to the operations of the airgun array, a hull-mounted multibeam echosounder (MBES) and a sub-bottom profiler (SBP) would also be operated from the *Thompson* continuously throughout the seismic surveys, but not during transits to and from the project area. All planned data acquisition and sampling activities would be conducted by SIO and UW with on board assistance by the scientists who have proposed the project. The vessel would be self-contained, and the crew would live aboard the vessel for the entire cruise.

The *Thompson* has a length of 83.5 m, a beam of 16 m, and a full load draft of 5.8 m. It is equipped with twin 360°-azimuth stern thrusters each powered by 3,000-hp DC motors and a water-jet bow thruster powered by a 1,100-hp DC motor. An operation speed of ~9–15 km/h (~5–8 kn) would be used during seismic acquisition. When not towing seismic survey gear, the *Thompson* cruises at 22 km/h (12 kn) and has a maximum speed of 26.9 km/h (14.5 kn). It has a normal operating range of ~24,400 km. The *Thompson* would also serve as the platform from which vessel-based protected species visual observers (PSVO) would watch for marine mammals and before and during airgun operations.

During the survey, the *Thompson* would tow two 45-in^3 GI airguns and a streamer containing hydrophones. The generator chamber of each GI gun, the one responsible for introducing the sound pulse into the ocean, is 45 in^3. The larger (105 in^3) injector chamber injects air into the previously generated bubble to maintain its shape and does not introduce more sound into the water. The 45-in^3 GI airguns would be towed 21 m behind the *Thompson,* 2 m (during 5-kn high-quality surveys) or 8 m (8-kn reconnaissance surveys) apart, side by side, at a depth of 2–4 m. High-quality surveys with the 2-m airgun separation configuration would use a streamer up to 1,600-m long, whereas the reconnaissance surveys with the 8-m airgun separation configuration would use a 200-m streamer. Seismic pulses would be emitted at intervals of 25 m for the 5-kn surveys using the 2-m GI airgun separation and at 50 m for the 8-kn surveys using the 8-m airgun separation.

TABLE 1—SPECIFICATIONS OF THE R/V THOMPSON AIRGUN ARRAY

Number of airguns	2.
Gun positions used	Two inline airguns 2- or 8-m apart.
Tow depth of energy source.	2–4 m.
Dominant frequency components.	0–188 hertz (Hz).
Air discharge volume	Approximately 90 in^3.

Proposed mitigation, monitoring, and reporting measures are described in detail later in this document (please see *Proposed Mitigation* and *Proposed Monitoring and Reporting*).

Description of Marine Mammals in the Area of Specified Activities

Section 4 of the application summarize available information regarding status and trends, distribution and habitat preferences, and behavior and life history, of the potentially affected species. Additional information about these species (*e.g.,* physical and behavioral descriptions) may be found on NMFS's website (*https://www.fisheries.noaa.gov/find-species*).

The populations of marine mammals considered in this document do not occur within the U.S. EEZ and are therefore not assigned to stocks and are not assessed in NMFS' Stock Assessment Reports (SAR). As such,

information on potential biological removal (PBR; defined by the MMPA as the maximum number of animals, not including natural mortalities, that may be removed from a marine mammal stock while allowing that stock to reach or maintain its optimum sustainable population) and on annual levels of serious injury and mortality from anthropogenic sources are not available for these marine mammal populations. Abundance estimates for marine mammals in the survey location are lacking; therefore estimates of abundance presented here are based on a variety of proxy sources including International Whaling Commission population estimates (IWC 2019), the U.S. Atlantic SARs (Hayes *et al.,* 2018) for a few dolphin species, and various literature estimates (see IHA application for further detail), as this is considered the best available information on potential abundance of marine mammals in the area. However, as described above, the marine mammals encountered by the proposed survey are not assigned to stocks. All abundance estimate values presented in Table 2 are the most recent available at the time of publication and are available in the 2018 U.S. Atlantic SARs (*e.g.,* Hayes *et al.* 2018) available online at: *www.fisheries.noaa.gov/national/marine-mammal-protection/marine-mammal-stock-assessments,* except where noted otherwise.

Table 2 lists all species with expected potential for occurrence in the Argentine Basin, Southwest Atlantic Ocean, and summarizes information related to the population, including regulatory status under the MMPA and ESA. For taxonomy, we follow Committee on Taxonomy (2018).

BILLING CODE 3510–22–P

Table 2: Marine Mammal Species Potentially Present in the Project Area Expected To Be Affected by the Specified Activities.

Common name	Scientific name	Stock[1]	ESA/MMPA status; Strategic (Y/N)[2]	Abundance	PBR	Relative occurrence in project area
Order Cetartiodactyla – Cetacea – Superfamily Mysticeti (baleen whales)						
Family Balaenidae						
Southern right whale	*Eubalaena australis*	n/a	E/D;N	12,000[3] 3,300[5]	N.A.	Uncommon
Family Cetotheriidae						
Pygmy right whale	*Caperea marginata*	n/a		N.A.	N.A.	Rare
Family Balaenopteridae (rorquals)						
Blue whale	*Balaenoptera musculus*	n/a	E/D;Y	2,300 true[4] 1,500 pygmy[6]	N.A.	Rare
Fin whale	*Balaenoptera physalus*	n/a	E/D;Y	15,000[6]	N.A.	Uncommon
Sei whale	*Balaenoptera borealis*	n/a	E	10,000[6]	N.A.	Uncommon
Common minke whale	*Balaenoptera acutorostrata*	n/a	-	515,000[3,6]	N.A.	Common
Antarctic minke whale	*Balaenoptera bonaerensis*	n/a	-	515,000[3,6]	N.A.	Common
Humpback whale	*Megaptera novaeangliae*	n/a	-	42,000[3]	N.A.	Rare
Bryde's whale	*Balaenoptera edeni/brydei*	n/a	-	48,109[7]	NA	Common
Superfamily Odontoceti (toothed whales, dolphins, and porpoises)						
Family Physeteridae						
Sperm whale	*Physeter macrocephalus*	n/a	E	12,069[10]	N.A.	Uncommon
Family Kogiidae						
Pygmy sperm whale	*Kogia breviceps*	n/a	-	N.A.	N.A.	Rare
Dwarf sperm whale	*Kogia sima*	n/a	-	N.A.	N.A.	Uncommon
Family Ziphiidae (beaked whales)						
Arnoux's beaked whale	*Berardius arnuxii*	n/a	-	599,300[11]	N.A.	Uncommon
Cuvier's beaked whale	*Ziphius cavirostris*	n/a	-	599,300[11]	N.A.	Uncommon
Southern bottlenose whale	*Hyperoodon planifrons*	n/a	-	599,300[11]	N.A.	Uncommon
Shepherd's beaked whale	*Tasmacetus sheperdi*	n/a	-	N.A.	N.A.	Uncommon
Blainville's beaked whale	*Mesoplodon densirostris*	n/a	-	N.A.	N.A.	Rare
Gray's beaked whale	*Mesoplodon grayi*	n/a	-	599,300[11]	N.A.	Uncommon

Gervais' beaked whale	*Mesoplodon europaeus*	n/a	-	N.A.	N.A.	Rare
Hector's beaked whale	*Mesoplodon hectori*	n/a	-	N.A.	N.A.	Rare
True's beaked whale	*Mesoplodon mirus*	n/a	-	N.A.	N.A.	Rare
Strap-toothed beaked whale	*Mesoplodon layardii*	n/a	-	599,300[11]	N.A.	Uncommon
Andrews' beaked whale	*Mesoplodon bowdoini*	n/a	-	N.A.	N.A.	Rare
Spade-toothed beaked whale	*Mesoplodon traversii*	n/a	-	N.A.	N.A.	Rare
Family Delphinidae						
Risso's dolphin	*Grampus griseus*	n/a	-	18,250[12]	N.A.	Common
Rough-toothed dolphin	*Steno bredanensis*	n/a	-	N.A.	N.A.	Common
Common bottlenose dolphin	*Tursiops truncatus*	n/a	-	77,532[12]	N.A.	Uncommon
Pantropical spotted dolphin	*Stenella attenuata*	n/a	-	3,333[12]	N.A.	Common
Atlantic spotted dolphin	*Stenella frontalis*	n/a	-	44,715[12]	N.A.	Rare
Spinner dolphin	*Stenella longirostris*	n/a	-	N.A.	N.A.	Uncommon
Clymene dolphin	*Stenella clymene*	n/a	-	N.A.	N.A.	Rare
Striped dolphin	*Stenella coeruleoalba*	n/a	-	54,807[12]	N.A.	Uncommon
Short-beaked common dolphin	*Delphinus delphis*	n/a	-	70,184[10]	N.A.	Uncommon
Fraser's dolphin	*Lagenodelphis hosei*	n/a	-	N.A.	N.A.	Uncommon
Dusky dolphin	*Lagenorhynchus obscurus*	n/a	-	7,252[12]	N.A.	Rare
Hourglass dolphin	*Lagenorhynchus cruciger*	n/a	-	150,000[6]	N.A.	Rare
Southern right whale dolphin	*Lissodelphis peronii*	n/a	-	N.A.	N.A.	Uncommon
Killer whale	*Orcinus orca*	n/a	-	25,000[14]	N.A.	Uncommon
Short-finned pilot whale	*Globicephala macrorhynchus*	n/a	-	200,000[6]	N.A.	Uncommon
Long-finned pilot whale	*Globicephala melas*	n/a	-	200,000[6]	N.A.	Uncommon
False killer whale	*Pseudorca crassidens*	n/a	-	N.A.	N.A.	Uncommon
Pygmy killer whale	*Feresa attenuata*	n/a	-	N.A.	N.A.	Uncommon
Melon-headed whale	*Peponocephala electra*	n/a	-	N.A.	N.A.	Uncommon
Order Carnivora – Superfamily Pinnipedia						
Family Otariidae (eared seals and sea lions)						
Cape fur seal	*Arctocephalus*	n/a	-	Approximately	N.A.	Uncommon

	pusillus pusillus			2 million[16]		
Subantarctic fur seal	*Arctocephalus tropicalis*	n/a	-	400,000[15]	N.A.	Uncommon
Family Phocidae (earless seals)						
Crabeater seal	*Lobodon carcinophaga*	n/a	-	5 – 10 million[17]	N.A.	Rare
Leopard seal	*Hydrurga leptonyx*	n/a	-	222,000 – 440,000[18]	N.A.	Rare
Southern elephant seal	*Mirounga leonina*	n/a	-	750,000[19]	N.A.	Uncommon

N.A. = Data not available. NL = Not listed

[1] U.S. *Endangered Species Act* (NOAA 2019): EN = Endangered

[2] International Union for the Conservation of Nature (IUCN) Red List of Threatened Species (IUCN 2019): EN = Endangered; NT = Near Threatened; VU = Vulnerable; LC = Least Concern; DD = Data Deficient

[3] Convention on International Trade in Endangered Species of Wild Fauna and Flora (UNEP-WCMC 2017): Appendix I = Threatened with extinction; Appendix II = not necessarily threatened with extinction but may become so unless trade is closely controlled

[4] Southern Hemisphere (IWC 2019)

[5] Southwest Atlantic (IWC 2019)

[6] Antarctic (Boyd 2002)

[7] Southern Hemisphere (IWC 1981)

[8] Dwarf and Antarctic minke whales combined

[9] There are 14 distinct population segments (DPSs) of humpback whales recognized under the ESA; the Brazil and Gabon/Southwest Africa DPSs are not listed (NOAA 2019)

[10] Estimate for the Antarctic, south of 60°S (Whitehead 2002)

[11] All beaked whales south of the Antarctic Convergence; mostly southern bottlenose whales (Kasamatsu and Joyce 1995)

[12] Estimate for the western North Atlantic (Hayes *et al.* 2018)

[13] Estimate for Patagonian coast (Dans *et al.* 1997)

[14] Minimum estimate for Southern Ocean (Branch and Butterworth 2001)

[15] Global population (Hofmeyr and Bester 2018)

[16] Butterworth *et al.* (1995 *in* Kirkman and Arnould 2018)

[17] Global population (Bengtson and Stewart 2018)

[18] Global population (Rogers 2018)

[19] Total world population (Hindell *et al.* 2016)

BILLING CODE 3510–22–C

All species that could potentially occur in the proposed survey areas are included in Table 2. As described below, all 48 species temporally and spatially co-occur with the activity to the degree that take is reasonably likely to occur, and we have proposed authorizing it.

Though other marine mammal species are known to occur in the Southwest Atlantic Ocean, the temporal and/or spatial occurrence of several of these species is such that take of these species is not expected to occur, and they are therefore not discussed further beyond the explanation provided here. An additional 13 species of marine mammals are known to occur in the Southwest Atlantic Ocean; however, they are unlikely to occur within the proposed project area because they are coastally-distributed (*e.g.,* Atlantic humpback dolphin, *Sousa teuszii;* Heaviside's dolphin, *Cephalorhynchus heavisidii;* Chilean dolphin, *C. eutropia;* long-beaked common dolphin, *Delphinus capensis;* Franciscana, *Pontoporia blainvillei;* Guiana dolphin, *Sotalia guianensis;* Burmeister's porpoise, *Phocoena spinipinnis;* West Indian manatee, *Trichechus manatus;* African manatee, *T. senegalensis;* South American fur seal, *Arctocephalus australis*); or (2) occur further south (spectacled porpoise, *Phocoena dioptrica;* Ross seal, *Ommatophoca rossii;* Weddell seal, *Leptonychotes weddellii*). Although a gray whale (*Eschrichtius robustus*) was sighted off Namibia in 2013 (Elwen and Gridley 2013), and the remains of a stranded Omura's whale (*Balaenoptera omurai*) were reported for Mauritania in western Africa (Jung *et al.* 2016), these species are not considered further as they typically do not occur in the Atlantic Ocean. None of these species are discussed further here.

We have reviewed SIO's species descriptions, including life history information, distribution, regional distribution, diving behavior, and acoustics and hearing, for accuracy and completeness. We refer the reader to Section 4 of SIO's IHA application for a complete description of the species, and offer a brief introduction to the species here, as well as information regarding population trends and threats, and describe information regarding local occurrence.

Mysticetes

Southern Right Whale

The southern right whale is circumpolar throughout the Southern Hemisphere between 20° S and 55° S (Jefferson *et al.* 2015), although it may occur further north where cold-water currents extend northwards (Best 2007). It migrates between summer foraging areas at high latitudes and winter breeding/calving areas in low latitudes (Jefferson *et al.* 2015). In the South Atlantic, known or historic breeding areas are located in the shallow coastal

waters of South America, including Argentina and Brazil, as well as the Falkland Islands, Tristan de Cunha, Namibia, and South Africa (IWC 2001). Rowntree *et al.* (2013) reported that during 2009, primary calving grounds included an estimated 3,864 southern right whales off South Africa.

Although southern right whale calving/breeding areas are located in nearshore waters, feeding grounds in the Southern Ocean apparently are located mostly in highly-productive pelagic waters (Kenney 2018). Waters south of South Africa are believed to be a nursery area for southern right whales, as females and calves are seen there (Barendse and Best 2014). Right whales with calves are seen in nearshore waters of South Africa during July–November (Best 2007). Nearshore waters off western South Africa might be used as a year-round feeding area (Barendse and Best 2014). The highest sighting rates off western South Africa occur during early austral summer, and the lowest rates have been reported from autumn to mid-winter (Barendse and Best 2014). Although right whales were depleted in the early 19th century by whaling, they are now reappearing off Namibia; this likely indicates a range expansion of the stock from South Africa rather than a separate stock (Roux *et al.* 2001, 2015). Numerous sightings were made in the area from 1971 through 1999; most sightings were made from July through November, with one sighting during December (Roux *et al.* 2001). A total of 10 calves were born off Namibia between 1996 and 1999 (Roux *et al.* 2001). However, Roux *et al.* (2015) postulated that Namibian waters currently serve as mating grounds rather than a calving area. Best (2007) reported a summer feeding concentration between 30° and 40° S, including the Guyot Province of Walvis Ridge, where three proposed survey areas (Gough, Tristan, Central) are located.

Pygmy Right Whale

The distribution of the pygmy right whale is circumpolar in the Southern Hemisphere between 30° S and 55° S in oceanic and coastal environments (Kemper 2018; Jefferson *et al.* 2015). The pygmy right whale appears to be non-migratory, although there may be some movement inshore in spring and summer (Kemper 2002; Jefferson *et al.* 2015), possibly related to food availability (Kemper 2018). Foraging areas are not known, but it seems likely that pygmy right whales may feed at productive areas in higher latitudes, such as near the Subtropical Convergence (Best 2007). There may be hotspots of occurrence where mesozooplankton, such as *Nyctiphanes australis* and *Calanus tonsus,* are plentiful (Kemper *et al.* 2013).

In the South Atlantic, pygmy right whale records exist for southern Africa, Argentina, Falkland Islands, and pelagic waters (Baker 1985). Leeney *et al.* (2013) reported 12 strandings and 8 records of skeletal remains for Namibia since 1978. Most of the records are for Walvis Bay; strandings have only been reported during austral summer (November–March). The large number of juveniles suggests that the area may be a nursery ground (Leeney *et al.* 2013). Best (2007) reported records between 30° S and 40° S, including near the Central survey area. Bester and Ryan (2007) suggested that pygmy right whales occur in the Tristan da Cunha archipelago. One pygmy right whale was taken by whalers at 35° S and 8° W on 30 November 1970 (Budylenko *et al.* 1973 *in* Best *et al.* 2009). There are no OBIS records of pygmy right whales for the offshore waters of the proposed survey area, but 10 records exist off southwestern Africa (OBIS 2019). Pygmy right whales could be seen in any of the proposed project area at the time of the surveys, in particular in the Gough, Tristan, and Central survey areas.

Blue Whale

The blue whale has a cosmopolitan distribution, but tends to be mostly pelagic, only occurring nearshore to feed and possibly breed (Jefferson *et al.* 2015). It is most often found in cool, productive waters where upwelling occurs (Reilly and Thayer 1990). The distribution of the species, at least during times of the year when feeding is a major activity, occurs in areas that provide large seasonal concentrations of euphausiids (Yochem and Leatherwood 1985). Seamounts and other deep ocean structures may be important habitat for blue whales (Lesage *et al.* 2016). Generally, blue whales are seasonal migrants between high latitudes in summer, where they feed, and low latitudes in winter, where they mate and give birth (Lockyer and Brown 1981).

An extensive data review and analysis by Branch *et al.* (2007a) showed that blue whales are essentially absent from the central regions of major ocean basins, including the South Atlantic. Blue whales were captured by the thousands off Angola, Namibia, and South Africa between 1908 and 1967 (Branch *et al.* 2007a; Figueiredo and Weir 2014), including several catches near the proposed project area during 1958–1973 (including in November and December) and a few sightings off South Africa. However, whales were nearly extirpated in this region, and sightings are now rare (Branch *et al.* 2007a). At least four records exist for Angola; all sightings were made in 2012, with at least one sighting in July, two in August, and one in October (Figueiredo and Weir 2014). Sightings were also made off Namibia in 2014 from seismic vessels (Brownell *et al.* 2016). Waters off Namibia may serve as a possible wintering and possible breeding ground for Antarctic blue whales (Best 1998, 2007; Thomisch *et al.* 2017). Antarctic blue whale calls were detected on acoustic recorders that were deployed northwest of Walvis Ridge (just to the north of the Valdivia Bank survey area) from November 2011 through May 2013 during all months except during September and October, indicating that not all whales migrate to higher latitudes during the summer (Thomisch *et al.* 2017). Most blue whales in southeastern Africa are expected to be Antarctic blue whales; however, ~4 percent may be pygmy blue whales (Branch *et al.* 2007b, 2008). In fact, pygmy blue whale vocalizations were detected off northern Angola in October 2008; these calls were attributed to the Sri Lanka population (Cerchio *et al.* 2010). One offshore sighting of a blue whale was made at 13.4° S, 26.8° W and the other at 15.9° S, 4.6° W (Branch *et al.* 2007a; OBIS 2019). The occurrence of blue whales in the Tristan da Cunha archipelago also seems likely (Bester and Ryan 2007). There are ~1845 blue whale records for the South Atlantic in the OBIS database; however, no records occur within the proposed project area (OBIS 2019). Blue whales could be encountered during the proposed surveys, in particular in the Valdivia Bank survey area.

Fin Whale

The fin whale is widely distributed in all the world's oceans (Gambell 1985), although it is most abundant in temperate and cold waters (Aguilar and García-Vernet 2018). Nonetheless, its overall range and distribution is not well known (Jefferson *et al.* 2015). Fin whales most commonly occur offshore, but can also be found in coastal areas (Jefferson *et al.* 2015). Most populations migrate seasonally between temperate waters where mating and calving occur in winter, and polar waters where feeding occurs in the summer; they are known to use the shelf edge as a migration route (Evans 1987). The northern and southern fin whale populations likely do not interact owing to their alternate seasonal migration; the resulting genetic isolation has led to the recognition of two subspecies, *B. physalus quoyi* and *B. p. physalus* in the

Southern and Northern hemispheres, respectively (Anguilar and García-Vernet 2018).

In the Southern Hemisphere, fin whales are typically distributed south of 50° S in the austral summer, migrating northward to breed in the winter (Gambell 1985). Historical whaling data showed several catches for the Tristan da Cunha archipelago (Best *et al.* 2009), as well as off Namibia and southern Africa (Best 2007). Fin whales appear to be somewhat common in the Tristan da Cunha archipelago from October–December (Bester and Ryan 2007). According to Edwards *et al.* (2015), sightings have been made south of South Africa from December–February; they did not report any sightings or acoustic detections near the proposed project area. Several fin whales sightings and strandings have been reported for Namibia in the last decade (NDP unpublished data *in* Pisces Environmental Services 2017). Fin whale calls were detected on acoustic recorders that were deployed northwest of Walvis Ridge from November 2011 through May 2013 during the months of November, January, and June through August, indicating that the waters off Namibia serve as wintering grounds (Thomisch *et al.* 2017). Similarly, Best (2007) also suggested that waters off Namibia may be wintering grounds.

Sei Whale

The sei whale occurs in all ocean basins (Horwood 2018), predominantly inhabiting deep waters throughout their range (Acevedo *et al.* 2017a). It undertakes seasonal migrations to feed in sub-polar latitudes during summer, returning to lower latitudes during winter to calve (Horwood 2018). In the Southern Hemisphere, sei whales typically concentrate between the Subtropical and Antarctic convergences during the summer (Horwood 2018) between 40° S and 50° S, with larger, older whales typically travelling into the northern Antarctic zone while smaller, younger individuals remain in the lower latitudes (Acevedo *et al.* 2017a). Best (2007) showed summer concentrations between 30° S and 50° S, including near the three proposed survey areas (Central, Tristan, Gough) in the Guyot Province of Walvis Ridge. Waters off northern Namibia may serve as wintering grounds (Best 2007).

A sighting of a mother and calf were made off Namibia in March 2012, and one stranding was reported in July 2013 (NDP unpublished data in Pisces Environmental Services 2017). One sighting was made during seismic surveys off the coast of northern Angola between 2004 and 2009 (Weir 2011). A group of 2–4 sei whales was seen near St. Helena during April 2011 (Clingham *et al.* 2013). Although the occurrence of sei whales is likely in the Tristan da Cunha archipelago (Bester and Ryan 2007), there have been no recent records of sei whales in the region; however, sei whale catches were made here in the 1960s (Best *et al.* 2009). Sei whales were also taken off southern Africa during the 1960s, with some catches reported just to the southeast of the proposed survey area; catches were made during the May–July northward migration as well as during the August–October southward migration (Best and Lockyer 2002). In the OBIS database, there are 40 sei whale records for the South Atlantic; the closest records were reported at 33.3° S, 8.0° W and 35.1° S, 6.4° W (OBIS 2019). Sei whales could be encountered in any of the proposed survey areas at the time of the surveys, in particular in the Gough, Tristan, and Central survey areas.

Bryde's Whale

Bryde's whale occurs in all tropical and warm temperate waters in the Pacific, Atlantic and Indian oceans, between 40° N and 40° S (Jefferson *et al.* 2015). It is one of the least known large baleen whales, and it remains uncertain how many species are represented in this complex (Kato and Perrin 2018). *B. brydei* is commonly used to refer to the larger form or ''true'' Bryde's whale and *B. edeni* to the smaller form; however, some authors apply the name B. edeni to both forms (Kato and Perrin 2018). Bryde's whale remains in warm (≤16 °C) water year-round (Kato and Perrin 2018), but analyses have shown that it prefers water <20.6 °C in the eastern tropical Atlantic (Weir *et al.* 2012). Seasonal movements have been recorded towards the Equator in winter and offshore in summer (Kato and Perrin 2018). It is frequently observed in biologically productive areas such as continental shelf breaks (Davis *et al.* 2002) and regions subjected to coastal upwelling (Gallardo *et al.* 1983; Siciliano *et al.* 2004). Central oceanic waters of the South Atlantic, including the proposed project area, are considered part of its secondary range (Jefferson *et al.* 2015).

In southern Africa, there are likely three populations of Bryde's whales—an inshore population, a pelagic population of the Southeast Atlantic stock, and the Southwest Indian Ocean stock (Best 2001). The Southeast Atlantic stock ranges from the equator to ~34° S and migrates north in the fall and south during the spring, with most animals occurring off Namibia during the austral summer (Best 2001). Numerous sightings have been made off Gabon (Weir 2011), Angola (Weir 2010, 2011), and South Africa (Findlay *et al.* 1992), including in deep slope waters. Strandings have also been reported along the Namibian coast (Pisces Environmental Services 2017). Bryde's whale was sighted in the offshore waters of the South Atlantic during a cruise from Spain to South Africa in November 2009, near 22° S, 6° W (Shirshov Institut n.d.). In the OBIS database, there are 12 records off the coast of South Africa (OBIS 2019). Bryde's whales are not expected to occur in the Libra Massif survey area. However, they could be encountered in the rest of the proposed project area, in particular the eastern portions of the Valdivia Bank survey area.

Common Minke Whale

The common minke whale has a cosmopolitan distribution ranging from the tropics and subtropics to the ice edge in both hemispheres (Jefferson *et al.* 2015). A smaller form (unnamed subspecies) of the common minke whale, known as the dwarf minke whale, occurs in the Southern Hemisphere, where its distribution overlaps with that of the Antarctic minke whale (*B. bonaerensis*) during summer (Perrin *et al.* 2018). The dwarf minke whale is generally found in shallower coastal waters and over the shelf in regions where it overlaps with *B. bonaerensis* (Perrin *et al.* 2018). The range of the dwarf minke whale is thought to extend as far south as 65° S (Jefferson *et al.* 2015) and as far north as 2° S in the Atlantic off South America, where it can be found nearly year-round (Perrin *et al.* 2018).

It is known to occur off South Africa during autumn and winter (Perrin *et al.* 2018), but has not been reported for the waters off Angola or Namibia (Best 2007). It is likely to occur in the waters of the Tristan da Cunha archipelago (Bester and Ryan 2007). There are 36 records for the South Atlantic in the OBIS database, including records off South America and along the coast of Namibia and South Africa; there are no records in the proposed project area (OBIS 2019). Dwarf minke whales could be encountered in the proposed project area at the time of the surveys.

Antarctic Minke Whale

The Antarctic minke whale has a circumpolar distribution in coastal and offshore areas of the Southern Hemisphere from ~7° S to the ice edge (Jefferson *et al.* 2015). It is found between 60° S and the ice edge during the austral summer; in the austral winter, it is mainly found at mid-

latitude breeding grounds, including off western South Africa and northeastern Brazil, where it is primarily oceanic, occurring beyond the shelf break (Perrin *et al.* 2018). Antarctic minke whale densities are highest near pack ice edges, although they are also found amongst pack ice (Williams *et al.* 2014), where they feed almost entirely on krill (Tamura and Konishi 2009).

In the Southeast Atlantic, Antarctic minke whales have been reported for the waters of South Africa, Namibia, and Angola (Best 2007). Antarctic minke whale calls were detected on acoustic recorders that were deployed northwest of Walvis Ridge from November 2011 through May 2013 during the months of November, December, January, and June through August, indicating that not all whales migrate to higher latitudes during the summer (Thomisch *et al.* 2017). Sightings have also been made along the coast of Namibia, in particular during summer (NPD unpublished data *in* Pisces Environmental Services 2017). Antarctic minke whales are also likely to occur in the Tristan da Cunha archipelago (Bester and Ryan 2007). Two groups totaling seven whales were sighted at 36.4° S, 8.5° W on 7 October 1988 (Best *et al.* 2009). A sighting of two whales was made off Brazil during an August–September 2010 survey from Vitória, at ~20° S, 40° W, to Trindade and Martim Vaz islands; the whales were seen in association with a group of rough-toothed dolphins near 19.1° S, 35.1° W on 21 August (Wedekin *et al.* 2014). There are five OBIS records for the South Atlantic, including along the coast of South America and South Africa; there are no records for the proposed project area (OBIS 2019). Antarctic minke whales could be encountered in the proposed project area at the time of the surveys.

Humpback Whale

Humpback whales are found worldwide in all ocean basins. In winter, most humpback whales occur in the subtropical and tropical waters of the Northern and Southern Hemispheres (Muto *et al.,* 2015). These wintering grounds are used for mating, giving birth, and nursing new calves. Humpback whales were listed as endangered under the Endangered Species Conservation Act (ESCA) in June 1970. In 1973, the ESA replaced the ESCA, and humpbacks continued to be listed as endangered. NMFS recently evaluated the status of the species, and on September 8, 2016, NMFS divided the species into 14 distinct population segments (DPS), removed the current species-level listing, and in its place listed four DPSs as endangered and one DPS as threatened (81 FR 62259; September 8, 2016). The remaining nine DPSs were not listed.

In the Southern Hemisphere, humpback whales migrate annually from summer foraging areas in the Antarctic to breeding grounds in tropical seas (Clapham 2018). Two of the breeding grounds are in the South Atlantic, off Brazil and West Africa (Engel and Martin 2009). Bettridge *et al.* (2015) identified humpback whales at these breeding locations as the Brazil and Gabon/Southwest Africa DPSs. There may be two breeding substocks in Gabon/Southwest Africa, including individuals in the main breeding area in the Gulf of Guinea and those animals migrating past Namibia and South Africa (Rosenbaum *et al.* 2009; Barendse *et al.* 2010a; Branch 2011; Carvalho *et al.* 2011). Migration rates are relatively high between populations within the southeastern Atlantic (Rosenbaum *et al.* 2009). However, Barendse *et al.* (2010a) reported no matches between individuals sighted in Namibia and South Africa based on a comparison of tail flukes. In addition, wintering humpbacks have also been reported on the continental shelf of northwest Africa, which may represent the northernmost humpback whales that are known to winter in the Gulf of Guinea (Van Waerebeek *et al.* 2013). Feeding areas for this stock include Bouvet Island (Rosenbaum *et al.* 2014) and waters of the Antarctic Peninsula (Barendse *et al.* 2010b).

Humpbacks have been seen on breeding grounds around São Tomé in the Gulf of Guinea from August through November; off Gabon, whales occur from late June–December (Carvalho *et al.* 2011). The west coast of South Africa might not be a 'typical' migration corridor, as humpbacks are also known to feed in the area; they are known to occur in the region during the northward migration (July–August), the southward migration (October–November), and into February (Barendse *et al.* 2010b; Carvalho *et al.* 2011; Seakamela *et al.* 2015). The highest sighting rates in the area occurred during mid-spring through summer (Barendse *et al.* 2010b). Off Namibia, the main peak of occurrence is during winter (July), with another peak during spring (September); however, this area is unlikely to be a breeding area (Elwen *et al.* 2014). Elwen *et al.* (2014) suggested that humpbacks are migrating northward past Namibia during winter and migrate closer to shore during a southward migration during spring/summer. Humpback whale calls were detected on acoustic recorders that were deployed northwest of Walvis Ridge from November 2011 through May 2013 during the months of November, December, January, and May through August, indicating that not all whales migrate to higher latitudes during the summer (Thomisch *et al.* 2017). Based on whales that were satellite-tagged in Gabon in winter 2002, migration routes southward include offshore waters along Walvis Ridge (Rosenbaum *et al.* 2014). Hundreds of sightings have been made during seismic surveys off the coast of Angola between 2004 and 2009, including in deep slope water; most sightings were reported during winter and spring (Weir 2011). Best *et al.* (1999) reported some sightings off the coast of Angola during November 1995. Humpback whale acoustic detections were made in the area from June through December 2008 (Cerchio *et al.* 2014).

Humpbacks occur occasionally around the Tristan da Cunha archipelago (Bester and Ryan 2007). Three records exist for Tristan waters, all south of 37° S (Best *et al.* 2009). Humpback whales have also been sighted off St. Helena (MacLeod and Bennett 2007; Clingham *et al.* 2013). Numerous humpbacks were detected visually and acoustically during a survey off Brazil from Vitória at ~20° S, 40° W, to Trindade and Martim Vaz islands during August–September 2010 (Wedekin *et al.* 2014). One adult humpback was seen on 31 August near Trindade Island, at 20.5° S, 29.3° W in a water depth of 150 m, but no acoustic detections were made east of 35° W (Wedekin *et al.* 2014). Numerous sightings were also made near Trindade Island during July–August 2007 and before that date (Siciliano *et al.* 2012). For the South Atlantic, the OBIS database shows over 700 records for the South Atlantic, including along the coast of South America and western Africa, and in offshore waters of the central Atlantic (OBIS 2019). The closest sightings to the proposed survey areas in the southeastern Atlantic occur near the Gough survey area at 33.8° S, 2.1° E and 32.5° S, 3.8° E (OBIS 2019). The waters of the proposed project area are considered part of the humpback's secondary range (Jefferson *et al.* 2015). However, humpback whales could be encountered at the time of the proposed surveys, in particular in the Valdivia Bank survey area.

Odontocetes

Sperm Whale

The sperm whale is widely distributed, occurring from the edge of the polar pack ice to the Equator in both hemispheres, with the sexes occupying

different distributions (Whitehead 2018). In general, it is distributed over large temperate and tropical areas that have high secondary productivity and steep underwater topography, such as volcanic islands (Jaquet and Whitehead 1996). Its distribution and relative abundance can vary in response to prey availability, most notably squid (Jaquet and Gendron 2002). Females generally inhabit waters >1,000 m deep at latitudes <40° where sea surface temperatures are <15° C; adult males move to higher latitudes as they grow older and larger in size, returning to warm-water breeding grounds according to an unknown schedule (Whitehead 2018).

Whaling data from the South Atlantic indicate that sperm whales may be migratory off South Africa, with peak abundances reported in the region during autumn and late winter/spring (Best 2007). The waters of northern Namibia and Angola were also historical whaling grounds (Best 2007; Weir 2019). Sperm whales were the most frequently sighted cetacean during seismic surveys off the coast of northern Angola between 2004 and 2009; hundreds of sightings were made off Angola and a few sightings were reported off Gabon (Weir 2011). Sperm whales have also been sighted off South Africa during surveys of the Southern Ocean (Van Waerebeek *et al.* 2010). In addition, a sighting was made at 30.1° S, 14.3° E (Clingham *et al.* 2013). Bester and Ryan (2007) reported that sperm whales might be common in the Tristan da Cunha archipelago. Catches of sperm whales in the 19th century were made in Tristan waters between October and January (Townsend 1935 *in* Best *et al.* 2009), and catches also occurred there in the 1960s (Best *et al.* 2009). One group was seen at St. Helena during July 2009 (Clingham *et al.* 2013). There are ~3,080 records of sperm whales for the South Atlantic in the OBIS database, including nearshore waters of South American and Africa and offshore waters (OBIS 2019). Most (3,069) records are from historical catch data, which include captures within the proposed project area (OBIS 2019). Sperm whales could be encountered in the proposed project area at the time of the surveys.

Pygmy and Dwarf Sperm Whales

Dwarf and pygmy sperm whales are distributed throughout tropical and temperate waters of the Atlantic, Pacific and Indian oceans, but their precise distributions are unknown because much of what we know of the species comes from strandings (McAlpine 2018). They are difficult to sight at sea, because of their dive behavior and perhaps because of their avoidance reactions to ships and behavior changes in relation to survey aircraft (Würsig *et al.* 1998). The two species are often difficult to distinguish from one another when sighted (McAlpine 2018). It has been suggested that the pygmy sperm whale is more temperate and the dwarf sperm whale more tropical, based at least partially on live sightings at sea from a large database from the eastern tropical Pacific (Wade and Gerrodette 1993; McAlpine 2018). This idea is also supported by the distribution of strandings in South American waters (Muñoz-Hincapié *et al.* 1998; Moura *et al.* 2016).

Both species are known to occur in the South Atlantic, occurring as far south as northern Argentina in the west and South Africa in the east (Jefferson *et al.* 2015). There are 30 records of *Kogia* sp. for Namibia; most of these are strandings of pygmy sperm whales, but one live stranding of a dwarf sperm whale has also been reported (Elwen *et al.* 2013). Twenty-six sightings of dwarf sperm whales were made during seismic surveys off the coast Angola between 2004 and 2009 (Weir 2011). Findlay *et al.* (1992) reported numerous records of dwarf sperm whales for South Africa. *Kogia* sp. were sighted during surveys off St. Helena during August–October 2004 (Clingham *et al.* 2013). There are no records of *Kogia* sp. in the offshore waters of the proposed survey area (OBIS 2019). The only records in the OBIS database for the South Atlantic are for Africa; there are 57 records of *K. breviceps* and 22 records of *K. sima* exist for southwestern Africa (OBIS 2019). Both pygmy and dwarf sperm whales could be encountered in the proposed project area at the time of the surveys.

Arnoux's Beaked Whale

Arnoux's beaked whale is distributed in deep, cold, temperate, and subpolar waters of the Southern Hemisphere, occurring between 24° S and Antarctica (Thewissen 2018). Most records exist for southeastern South America, Falkland Islands, Antarctic Peninsula, South Africa, New Zealand, and southern Australia (MacLeod *et al.* 2006; Jefferson *et al.* 2015). One sighting was made south of Africa at ~40° S during surveys of the Southern Ocean (Van Waerebeek *et al.* 2010). Arnoux's beaked whales likely occur in the Tristan da Cunha archipelago (Bester and Ryan 2007). There are three OBIS records for the Southeast Atlantic in South Africa and no records for the Southwest Atlantic (OBIS 2019). Based on information presented in Best (2007), it is more likely to be encountered in the southern Central, Gough, and Tristan survey areas than in the more northern survey area.

Cuvier's Beaked Whale

Cuvier's beaked whale is probably the most widespread and common of the beaked whales, although it is not found in high-latitude polar waters (Heyning 1989; Baird 2018a). It is rarely observed at sea and is known mostly from strandings; it strands more commonly than any other beaked whale (Heyning 1989). Cuvier's beaked whale is found in deep water in the open-ocean and over and near the continental slope (Gannier and Epinat 2008; Baird 2018a).

In the South Atlantic, there are stranding records for Brazil, Uruguay, Argentina, Falkland Islands, and South Africa (MacLeod *et al.* 2006; Otley *et al.* 2012; Fisch and Port 2013; Bortolotto *et al.* 2016; Riccialdelli *et al.* 2017). Sighting records exist for nearshore Brazil, South Africa, and the central South Atlantic and Southern Ocean (Findlay *et al.* 1992; MacLeod *et al.* 2006; Prado *et al.* 2016), as well as for Gabon (Weir 2007) and Angola (Best 2007; Weir 2019). UNEP/CMS (2012) reported its presence in Namibia. Bester and Ryan (2007) suggested that Cuvier's beaked whales likely occur in the Tristan da Cunha archipelago. There are 11 OBIS records for the South Atlantic, including Brazil, Namibia, and South Africa; however, there are no records within or near the proposed project area (OBIS 2019). Cuvier's beaked whale could be encountered in the proposed project area at the time of the surveys.

Southern Bottlenose Whale

The southern bottlenose whale is found throughout the Southern Hemisphere from 30° S to the ice edge, with most sightings reported between ~57° S and 70° S (Jefferson *et al.* 2015; Moors-Murphy 2018). It is apparently migratory, occurring in Antarctic waters during summer (Jefferson *et al.* 2015). Several sighting and stranding records exist for southeastern South America, Falkland Islands, South Georgia Island, southeastern Brazil, and Argentina, and numerous sightings have been reported for the Southern Ocean (MacLeod *et al.* 2006; de Oliveira Santos and e Figueiredo 2016; Riccialdelli *et al.* 2017). Southern bottlenose whales were sighted near 45° S and south of there during surveys of the Southern Ocean (Van Waerebeek *et al.* 2010). There are eight records in the OBIS database for the South Atlantic, including one in the central South Atlantic at 37.1° S, 12.3° W, as well as Brazil, Namibia, and South Africa (OBIS 2019). Based on limited information on its distributional range (Best 2007; Jefferson *et al.* 2015),

the southern bottlenose whale is more likely to occur in the southern survey areas than the Valdivia Bank survey area.

Shepherd's Beaked Whale

Based on known records, it is likely that Shepherd's beaked whale has a circumpolar distribution in the cold temperate waters of the Southern Hemisphere, between 33–50° S (Mead 2018). It is primarily known from strandings, most of which have been recorded in New Zealand and the Tristan da Cunha archipelago (Pitman *et al.* 2006; Mead 2018). The Tristan da Cunha archipelago has the second highest number of strandings (Mead 2018) and is thought to be a concentration area for Shepherd's beaked whales (Bester and Ryan 2007; Best *et al.* 2009). Pitman *et al.* (2006) and Best *et al.* (2009) reported six stranding records for Tristan da Cunha and possible sightings on the Tristan Plateau (2 sightings of 10 whales on 17 November 1985 near 37.3° S, 12.5° W) and Gough Island (one sighting of 4–5 animals). Another stranding of two whales on Tristan da Cunha occurred on 13 January 2012 (Best *et al.* 2014). Shepherd's beaked whales were sighted south of Africa during surveys of the Southern Ocean (Van Waerebeek *et al.* 2010). There are three records for the South Atlantic in the OBIS database, all southwest of South Africa (OBIS 2019). Based on limited information on its distributional range (Best 2007; Jefferson *et al.* 2015), Shepherd's beaked whale is more likely to occur in the southern survey areas than the Valdivia Bank survey area.

Blainville's Beaked Whale

Blainville's beaked whale is found in tropical and warm temperate waters of all oceans (Pitman 2018). It has the widest distribution throughout the world of all *Mesoplodon* species (Pitman 2018). In the South Atlantic, strandings have been reported for southern Brazil and South Africa (Findlay *et al.* 1992; Secchi and Zarzur 1999; MacLeod *et al.* 2006; Prado *et al.* 2016). A sighting was made during a boat survey off St. Helena in November 2007 (Clingham *et al.* 2013). There are 20 OBIS records for South Africa, but none for the offshore waters of the proposed project area (OBIS 2019). Based on limited information on its distributional range (Best 2007; Jefferson *et al.* 2015), Blainville's beaked whale could be encountered in the proposed project area.

Gray's Beaked Whale

Gray's beaked whale is thought to have a circumpolar distribution in temperate waters of the Southern Hemisphere (Pitman 2018). It primarily occurs in deep waters beyond the edge of the continental shelf (Jefferson *et al.* 2015). Some sightings have been made in very shallow water, usually of sick animals coming in to strand (Gales *et al.* 2002; Dalebout *et al.* 2004). There are numerous sighting records from Antarctic and sub-Antarctic waters (MacLeod *et al.* 2006); in summer months, Gray's beaked whales appear near the Antarctic Peninsula and along the shores of the continent (sometimes in the sea ice).

In the South Atlantic, several stranding records exist for Brazil, the southeast coast of South America, Falkland Islands, Namibia, and South Africa (Findlay *et al.* 1992; MacLeod *et al.* 2006; Otley 2012; Otley *et al.* 2012; Prado *et al.* 2016; Riccialdelli *et al.* 2017). Additionally, one sighting was reported off the southwestern tip of South Africa (MacLeod *et al.* 2006). A sighting was also made south of Arica near 45° S during surveys of the Southern Ocean (Van Waerebeek *et al.* 2010). UNEP/CMS (2012) reported their presence in Namibia. Gray's beaked whales likely occur in the Tristan da Cunha archipelago (Bester and Ryan 2007). However, there are no OBIS records for the offshore waters of the proposed project area, but there are records for Argentina and South Africa (OBIS 2019). Based on limited information on its distributional range (Best 2007; Jefferson *et al.* 2015). Gray's beaked whale is more likely to occur in the southern survey areas than the Valdivia Bank survey area.

Hector's Beaked Whale

Hector's beaked whale is thought to have a circumpolar distribution in temperate waters of the Southern Hemisphere (Pitman 2018). Like other Mesoplodonts, Hector's beaked whale likely inhabits deep waters (200–2000 m) in the open ocean or continental slopes (Pitman 2018). To date, Hector's beaked whales have only been identified from strandings and have not been observed in the wild (Pitman 2018). Based on the number of stranding records for the species, it appears to be relatively rare. Nonetheless, in the South Atlantic, strandings have been reported for southern Brazil, Argentina, Falkland Islands, and South Africa (MacLeod *et al.* 2006; Otley *et al.* 2012; Prado *et al.* 2016; Riccialdelli *et al.* 2017). However, there are no OBIS records for this species for the South Atlantic (OBIS 2019). Based on limited information on its distributional range (Best 2007; Jefferson *et al.* 2015). Hector's beaked whale is more likely to occur in the southern survey areas than the Valdivia Bank survey area.

Gervais' Beaked Whale

Although Gervais' beaked whale is generally considered to be a North Atlantic species, it likely occurs in deep waters of the temperate and tropical Atlantic Ocean in both the northern and southern hemispheres (Jefferson *et al.* 2015). Stranding records have been reported for Brazil and Ascension Island in the central South Atlantic (MacLeod *et al.* 2006). The southernmost stranding record was reported for São Paulo, Brazil, possibly expanding the known distributional range of this species southward (Santos *et al.* 2003). Although the distribution range of Gervais' beaked whale is not generally known to extend as far south as the proposed project area, this species might range as far south as Angola or northern Namibia in the South Atlantic (MacLeod *et al.* 2006; Best 2007; Jefferson *et al.* 2015). In fact, one stranding has been reported for Namibia (Bachara and Norman 2014). There are no OBIS records for the South Atlantic (OBIS 2019). Gervais' beaked whale could be encountered in the proposed project area at the time of the surveys.

True's Beaked Whale

True's beaked whale has a disjunct, antitropical distribution (Jefferson *et al.* 2015). In the Southern Hemisphere, it is known to occur in South Africa, South America, and Australia (Findlay *et al.* 1992; Souza *et al.* 2005; MacLeod and Mitchell 2006; MacLeod *et al.* 2006; Best *et al.* 2009). These areas may comprise three separate populations; the region of South Africa in the Indian Ocean is considered a key beaked whale area (MacLeod and Mitchell 2006). In the South Atlantic, True's beaked whale has stranded on Tristan da Cunha (Best *et al.* 2009). Based on stranding and sighting data, the proposed southern project area, including southern waters of Valdivia Bank survey area, is part of the possible range of True's beaked whale (MacLeod *et al.* 2006; Best 2007; Jefferson *et al.* 2015). There are 14 OBIS records for the South Atlantic, all for the off South Africa (OBIS 2019). True's beaked whale could be encountered in the proposed project area at the time of the surveys.

Strap-Toothed Beaked Whale

The strap-toothed beaked whale is thought to have a circumpolar distribution in temperate and

subantarctic waters of the Southern Hemisphere, mostly between 32° and 63° S (MacLeod *et al.* 2006; Jefferson *et al.* 2015). It may undertake limited migration to warmer waters during the austral winter (Pitman 2018). Strap-toothed beaked whales are thought to migrate northward from Antarctic and subantarctic latitudes during April–September (Sekiguchi *et al.* 1995).

In the South Atlantic, stranding records have been reported for Brazil, Uruguay, Argentina, Falkland Islands, South Georgia, Namibia, and South Africa (Findlay *et al.* 1992; Pinedo *et al.* 2002; MacLeod *et al.* 2006; Otley *et al.* 2012; Prado *et al.* 2016; Riccialdelli *et al.* 2017). In addition, sightings have been reported off the southern tip of Africa, near Bouvet Island, and in the Southern Ocean (Finlay *et al.* 1992; MacLeod *et al.* 2006). One sighting was made south of Africa during surveys of the Southern Ocean (Van Waerebeek *et al.* 2010). Bester and Ryan (2007) suggested that strap-toothed beaked whales likely occur in the Tristan da Cunha archipelago (Bester and Ryan 2007). There are 38 OBIS records for the South Atlantic, including for Argentina, Namibia, and South Africa; however, there are no records in the offshore waters of the proposed project area (OBIS 2019). Based on limited information on its distributional range (Best 2007; Jefferson *et al.* 2015), strap-toothed beaked whales are more likely to occur in the southern survey areas than the Valdivia Bank survey area.

Andrew's Beaked Whale

Andrew's beaked whale has a circumpolar distribution in temperate waters of the Southern Hemisphere (Baker 2001; Pitman 2018). It is known only from stranding records between 32° S and 55° S, with more than half of the strandings occurring in New Zealand (Jefferson *et al.* 2015). In the South Atlantic, Andrew's beaked whales have also stranded in the Tristan da Cunha archipelago, Falkland Islands, Argentina, and Uruguay (Baker 2001; Laporta *et al.* 2005; MacLeod *et al.* 2006; Best *et al.* 2009; Otley *et al.* 2012; Riccialdelli *et al.* 2017). There are no OBIS records for the South Atlantic (OBIS 2019). Based on limited information on its distributional range (Best 2007; Jefferson *et al.* 2015), Andrew's beaked whale is more likely to occur in the southern survey areas than the Valdivia Bank survey area.

Spade-Toothed Beaked Whale

The spade-toothed beaked whale is the name proposed for the species formerly known as Bahamonde's beaked whale (*M. bahamondi*); genetic evidence has shown that it belongs to the species first identified by Gray in 1874 (Van Helden *et al.* 2002). The spade-toothed beaked whale is considered relatively rare and is known from only four records, three from New Zealand and one from Chile (Thompson *et al.* 2012). Although no records currently exist for the South Atlantic, the known records at similar latitudes suggest that the spade-toothed beaked whale could occur in the proposed project area.

Risso's Dolphin

Risso's dolphin is distributed worldwide in mid-temperate and tropical oceans (Kruse *et al.* 1999), although it shows a preference for mid-temperate waters of the shelf and slope between 30° and 45° S (Jefferson *et al.* 2014). Although it occurs from coastal to deep water (~200–1000 m depth), it shows a strong preference for mid-temperate waters of upper continental slopes and steep shelf-edge areas (Hartman 2018). In the southeastern Atlantic Ocean, there are records spanning from Gabon to South Africa (Jefferson *et al.* 2014). It appears to be relatively common off Angola; 75 sightings were made during seismic surveys off the coast of northern Angola between 2004 and 2009, including in deep slope waters (Weir 2011). Four sightings were also made off Gabon (Weir 2011). It was also sighted during surveys off southern Africa, and there are stranding records for Namibia (Findlay *et al.* 1992). There are 54 records for the South Atlantic in the OBIS database, including for Argentina, Namibia, and South Africa; however, there are no records in the proposed project area. Risso's dolphin could be encountered in the proposed survey areas at the time of the surveys.

Rough-Toothed Dolphin

The rough-toothed dolphin is distributed worldwide in tropical and subtropical waters (Jefferson *et al.* 2015). It is generally seen in deep, oceanic water, although it is known to occur in coastal waters of Brazil (Jefferson *et al.* 2015; Cardoso *et al.* 2019). In the Southeast Atlantic, rough-toothed dolphins have been sighted off Namibia (Findlay *et al.* 1992), Gabon (de Boer 2010), and Angola (Weir 2007, 2010). Eighteen sightings were made during seismic surveys off the coast of northern Angola between 2004 and 2009, including in deep slope waters; one sighting was also made off Gabon (Weir 2011). Rough-toothed dolphins have also been sighted at St. Helena (MacLeod and Bennett 2007; Clingham *et al.* 2013), near the Central survey area at 32.5° S, 2.0° W (Peters 1876 *in* Best *et al.* 2009), and near 37° S, 15° E (Scheidat *et al.* 2011). One rough-toothed dolphin sighting was made during an August–September 2010 survey off Brazil from Vitória at ~20° S, 40° W to Trindade and Martim Vaz islands; the group of 30 individuals was seen in association with two minke whales at ~19.1° S, 35.1° W on 21 August (Wedekin *et al.* 2014). For the South Atlantic, there are 42 records of rough-toothed dolphin in the OBIS database, including off Brazil, central West Africa, and South Africa (OBIS 2019). Rough-toothed dolphins could be encountered in the proposed project area during the surveys.

Common Bottlenose Dolphin

The bottlenose dolphin occurs in tropical, subtropical, and temperate waters throughout the world (Wells and Scott 2018). Although it is more commonly found in coastal and shelf waters, it can also occur in deep offshore waters (Jefferson *et al.* 2015). Jefferson *et al.* (2015) reported central pelagic waters of the South Atlantic Ocean (within the proposed project area) as secondary range for the bottlenose dolphin. In the southeastern South Atlantic, common bottlenose dolphins occur off Gabon (de Boer 2010), Angola (Weir 2007, 2010), Namibia (Findlay *et al.* 1992; Peddemors 1999), and South Africa (Findlay *et al.* 1992). Off Namibia, there is likely an inshore and an offshore ecotype (Peddemors 1999). Numerous sightings were made during seismic surveys off the coast of northern Angola between 2004 and 2009, including in deep slope waters; sightings were also made off Gabon (Weir 2011).

Three sightings of common bottlenose dolphins were made at Trindade Island during December 2009–February 2010 surveys; two sightings of 15 individuals were made during December and a single bottlenose dolphin was sighted on 23 February (Carvalho and Rossi-Santos 2011). Additionally, two sightings of common bottlenose dolphins were made during an August–September 2010 survey from Vitória at ~20° S, 40° W to Trindade and Martim Vaz islands; both groups were seen on 30 August at Trindade Island, near 20.5° S, 29.3° W (Wedekin *et al.* 2014). Common bottlenose dolphins have also been sighted near St. Helena (MacLeod and Bennett 2007; Clingham *et al.* 2013). There are 132 OBIS records for the western and eastern South Atlantic; however, there are no records in the offshore waters of the proposed project area (OBIS 2019). Common bottlenose dolphins could be encountered in the

proposed project area during the surveys (Jefferson *et al.* 2015).

Pantropical Spotted Dolphin

The pantropical spotted dolphin is distributed worldwide in tropical and some subtropical waters, between ~40° N and 40° S (Jefferson *et al.* 2015). It is one of the most abundant cetaceans and is found in coastal, shelf, slope, and deep waters (Perrin 2018a). In the South Atlantic, pantropical spotted dolphins have been sighted off Brazil (Moreno *et al.* 2005), Gabon (de Boer 2010), Angola (Weir 2007, 2010), and St. Helena (MacLeod and Bennett 2007; Clingham *et al.* 2013). Four sightings were made during seismic surveys off the coast off northern Angola between 2004 and 2009, including in deep slope waters; and additional four sightings were made off Gabon (Weir 2011). Findlay *et al* (1992) reported sightings off the east coast of South Africa. In the OBIS database, there is one record for Brazil and one record for South Africa (OBIS 2019). Based on its distributional range (Best 2007; Jefferson *et al.* 2015), pantropical spotted dolphins could be encountered during the proposed surveys.

Atlantic Spotted Dolphin

The Atlantic spotted dolphin is distributed in tropical and warm temperate waters of the North Atlantic from Brazil to New England and to the coast of Africa (Jefferson *et al.* 2015). Although its distributional range appears to be just to the north of the proposed project area (Best 2007; Jefferson *et al.* 2015), Culik (2004) reported its presence in Namibia. These dolphins were one of the most frequently sighted cetaceans during seismic surveys off the coast of northern Angola between 2004 and 2009, including in deep slope waters; about 100 sightings were made off Angola and several sightings were also made off Gabon (Weir 2011). For the South Atlantic, there is one record for Brazil in the OBIS database (OBIS 2019). Atlantic spotted dolphins could be encountered in the proposed project area during the surveys.

Spinner Dolphin

The spinner dolphin is pantropical in distribution, with a range nearly identical to that of the pantropical spotted dolphin, including oceanic tropical and sub-tropical waters between 40° N and 40° S (Jefferson *et al.* 2015). Spinner dolphins are extremely gregarious, and usually form large schools in the open sea and small ones in coastal waters (Perrin and Gilpatrick 1994).

Its distributional range appears to be to the north of the proposed survey area in the South Atlantic (Best 2007; Jefferson *et al.* 2015). One group of three individuals was seen near the 1000-m isobath during seismic surveys off the coast of northern Angola between 2004 and 2009 (Weir 2011). There are two OBIS records for the South Atlantic: One sighting north of the Falkland Islands at 47.4° S, 54.2° W and another off Brazil (OBIS 2019). Based on distributional information (Best 2007; Jefferson *et al.* 2015), spinner dolphins could be encountered during the proposed surveys, most likely in the northern parts of the Valdivia Bank survey area.

Clymene Dolphin

The clymene dolphin only occurs in tropical and subtropical waters of the Atlantic Ocean (Jefferson *et al.* 2015). It inhabits areas where water depths are 700–4,500 m or deeper (Fertl *et al.* 2003). In the western Atlantic, it occurs from New Jersey to Florida, the Caribbean Sea, the Gulf of Mexico and south to Venezuela and Brazil (Würsig *et al.* 2000; Fertl *et al.* 2003).

In the eastern Atlantic, they have been sighted as far south as Angola (Weir 2006; Weir *et al.* 2014). One sighting was made during seismic surveys off the coast of northern Angola between 2004 and 2009 (Weir 2011). Currently available information indicates that only the northern-most proposed project area might overlap with its distributional range (*e.g.,* Fertl *et al.* 2003; Best 2007; Jefferson *et al.* 2015), although Weir *et al.* (2014) noted that it is unlikely that this species occurs farther south than Angola due to the cold Benguela Current there. There are no OBIS records for the South Atlantic (OBIS 2019). Based on distributional information (Best 2007; Jefferson *et al.* 2015), Clymene dolphins could be encountered in the northern parts of the Valdivia Bank survey area.

Striped Dolphin

The striped dolphin has a cosmopolitan distribution in tropical to warm temperate waters from ~50° N to 40° S (Perrin *et al.* 1994; Jefferson *et al.* 2015). It occurs primarily in pelagic waters, but has been observed approaching shore where there is deep water close to the coast (Jefferson *et al.* 2015). In the South Atlantic, it is known to occur along the coast of South America, from Brazil to Argentina, and along the west coast of Africa (Jefferson *et al.* 2015).

Sightings have been made on the west coast of South Africa (Findlay *et al.* 1992). Sixty-six sightings were made during seismic surveys off the coast of northern Angola between 2004 and 2009, including in deep slope waters (Weir 2011). There are approximately 60 OBIS records for the South Atlantic, including nearshore waters of Brazil, Uruguay, Argentina, Angola, and South Africa, and 19 records for offshore waters near 8.4° S, 24.4° W (OBIS 2019). Based on distributional information (Best 2007; Jefferson *et al.* 2015), striped dolphins could be encountered during the proposed surveys.

Short-Beaked Common Dolphin

The short-beaked common dolphin is found in tropical and warm temperate oceans around the world (Jefferson *et al.* 2015), ranging from ~60° N to ~50° S (Jefferson *et al.* 2015). It is the most abundant dolphin species in offshore areas of warm-temperate regions in the Atlantic and Pacific (Perrin 2018c).

In the South Atlantic, the short-beaked common dolphin occurs along the coasts of South America and Africa (Perrin 2018c). Although according to Jefferson *et al.* (2015) and Perrin (2018c), its occurrence in central oceanic waters of the South Atlantic is uncertain, Best (2007) reported a few records between 30–41° S, 15° W–10° E. Sightings have also been reported along the coast of Namibia (Best 2007; NDP unpublished data *in* Pisces Environmental Services 2017). Sightings have been reported off the west coast of southern Africa during summer and winter, and there are stranding records for Namibia (Findlay *et al.* 1992). About 100 sightings of *Delphinus* sp. were made during seismic surveys off the coast of northern Angola between 2004 and 2009, including in deep slope waters; sightings were also made off Gabon (Weir 2011). For the South Atlantic, there are 7 OBIS records for waters off Argentina and nearly 80 records for southwestern Africa, including Namibia and South Africa (OBIS 2019). Short-beaked common dolphins could be encountered in the proposed project area at the time of the surveys.

Fraser's Dolphin

Fraser's dolphin is a tropical oceanic species generally distributed between 30° N and 30° S that generally inhabits deeper, offshore water (Dolar 2018). Strandings in more temperate waters, such as in Uruguay, are likely extralimital (Dolar 2018). Three sightings were made during seismic surveys off the coast of northern Angola between 2004 and 2009, all in water deeper than 1000 m; one sighting was made in the Gulf of Guinea (Weir *et al.* 2008; Weir 2011). Fraser's dolphin has

also been sighted off the east coast of South Africa (Findlay *et al.* 1992). There are 24 OBIS records for the South Atlantic, all along the coast of South America (OBIS 2019). Based on its distribution (Jefferson *et al.* 2015), Fraser's dolphin could be encountered during the proposed surveys, but is more likely to be seen in the northern portions of the Valdivia Bank survey area than elsewhere.

Dusky Dolphin

The dusky dolphin occurs throughout the Southern Hemisphere, primarily over continental shelves and slopes and sometimes over deep water close to continents or islands (Van Waerebeek and Würsig 2018). In the southeastern Atlantic, it occurs along the coast of Angola, Namibia, and South Africa, as well as Tristan da Cunha (Findlay *et al.* 1992; Culik 2004; Weir 2019). It appears to occur off the west coast of southern Africa year-round (Findlay *et al.* 1982). According to Jefferson *et al.* (2015), it is unlikely to occur in the deep waters of the proposed project area.

It has been observed in groups of 10 to 20 individuals preying on Cape horse mackerel off Namibia (Bernasconi *et al.* 2011), and it has been seen in mixed groups with southern right whale dolphins there (Culik 2004). It was sighted during spring surveys off west coast of South Africa during 2014 (Seakamala *et al.* 2015). It has also been reported near Gough Island; animals there likely make up a disjunct oceanic population rather than suggesting movement of individuals between South America and southern Africa (Cassens *et al.* 2005). There are ~150 OBIS records for the South Atlantic, but none occur within the proposed project area. The dusky dolphin is unlikely to be encountered in the proposed survey areas in the southeastern Atlantic, and is not expected to occur in the Libra Massif survey area.

Hourglass Dolphin

The hourglass dolphin occurs in all parts of the Southern Ocean, with most sightings between ~45° S and 60° S (Cipriano 2018a). However, some sightings have been made as far north as 33° S (Jefferson *et al.* 2015). Although it is pelagic, it is also sighted near banks and islands (Cipriano 2018a). There are approximately 45 records in the OBIS database for the Southwest Atlantic, but none within the Libra Massif survey area (OBIS 2019). Based on its known distributional range (Best 2007; Jefferson *et al.* 2015), it could occur in the southern-most portions of the proposed project area.

Southern Right Whale Dolphin

The southern right whale dolphin is distributed between the Subtropical and Antarctic convergences in the Southern Hemisphere, generally between ~30° S and 65° S (Jefferson *et al.* 2015; Lipsky and Brownell 2018). It is sighted most often in cool, offshore waters, although it is sometimes seen near shore where coastal waters are deep (Jefferson *et al.* 2015). It is also known to occur off Namibia (Findlay *et al.* 1992; Culik 2004), where it has been seen out to the 1000-m isobath (Rose and Payne 1991); it is thought to occur in the region year-round (Rose and Payne 1991). However, Best (2007) did not report any sightings in the Valdivia Bank survey area. There are no records for the South Atlantic in the OBIS database (OBIS 2019). Bester and Ryan (2007) suggested that southern right whale dolphins might be visitors to the southern waters of the Tristan da Cunha archipelago. One was captured near Tristan da Cunha on 10 December 1847 at 37.1° S, 11.6° W (Cruickshank and Brown 1981 *in* Best *et al.* 2009). There are no records for the South Atlantic in the OBIS database (OBIS 2019). According its distribution range (Best 2007; Jefferson *et al.* 2015), southern right whale dolphins could occur in the proposed project area, although they are more likely to be encountered in the more southerly survey areas.

Killer Whale

Killer whales have been observed in all oceans and seas of the world (Leatherwood and Dahlheim 1978). Based on sightings by whaling vessels between 1960 and 1979, killer whales are distributed throughout the South Atlantic (Budylenko 1981; Mikhalev *et al.* 1981). Although reported from tropical and offshore waters (Heyning and Dahlheim 1988), killer whales prefer the colder waters of both hemispheres, with greatest abundances found within 800 km of major continents (Mitchell 1975). In the southeastern Atlantic, killer whales are known to occur off Gabon (de Boer 2010; Weir 2010), Angola (Weir 2007, 2010, 2011), as well as Namibia and South Africa (Findlay *et al.* 1992; Best 2007; Elwen and Leeney 2011). Sightings of killer whale pods of 1 to >100 individuals have been made near the proposed survey areas during November and December (Budylenko 1981; Mikhalev *et al.* 1981). Eighteen sightings were made during seismic surveys off northern Angola between 2004 and 2009, including in deep slope waters; one sighting was made off Gabon (Weir 2011). The number of sightings are thought to decrease north of Cape Town, South Africa, but sightings have been made year round, including in offshore waters (up to 600 km from shore), but not within the proposed project area (Rice and Saayman 1987). Killer whales are known to prey on longline catches in the waters off South Africa (Williams *et al.* 2009). Sightings of killer whale pods of 1 to >100 individuals have been made near the Libra Massif survey area during November (Budylenko 1981; Mikhalev *et al.* 1981). A sighting was made south of the proposed survey areas at approximately 45° S, 8° W (Scheidat *et al.* 2011). There are about 55 records of killer whales for the South Atlantic in the OBIS database, including records for offshore and nearshore waters of South America, as well as South Africa (OBIS 2019); however, there are no records near the proposed survey areas.

Short-Finned and Long-Finned Pilot Whale

The short-finned pilot whale is found in tropical and warm temperate waters, and the long-finned pilot whale is distributed antitropically in cold temperate waters (Olson 2018). The ranges of the two species show little overlap (Olson 2018). Short-finned pilot whale distribution does not generally range south of 40° S (Jefferson *et al.* 2008). Short-finned pilot whales were the most frequently sighted cetacean during seismic surveys off the coast of Angola between 2004 and 2009; more than 100 sightings were off Angola including in deep slope waters and several sightings were also reported off Gabon (Weir 2011). There are records of long-finned pilot whales for South Africa and Namibia (Findlay *et al.* 1992; Best 2007). Long-finned pilot whales are considered uncommon in Tristan waters (Bester and Ryan 2007); pilot whales have stranded on the islands of the Tristan da Cunha archipelago, although it is uncertain what species they were (Best *et al.* 2009). There is a single record of short-finned pilot whales in the Southwest Atlantic Ocean, but there are >100 long-finned pilot whale records for the waters off South America, Namibia, South Africa, and the central Atlantic Ocean (OBIS 2019). Based on their distributional ranges (Best 2007; Jefferson *et al.* 2015), short-finned pilot whales are more likely to occur in the Valdivia Bank survey area, whereas long-finned pilot whales are more likely to occur in the more southern survey areas.

False Killer Whale

The false killer whale is found worldwide in tropical and temperate

waters, generally between 50° N and 50° S (Odell and McClune 1999). It is widely distributed, but not abundant anywhere (Carwardine 1995).

The false killer whales occurs throughout the South Atlantic. In the southeast Atlantic Ocean, 13 sightings were made during seismic surveys off the coast of northern Angola between 2004 and 2009, all in water deeper than 1000 m (Weir 2011). Stranding records and sightings also exist for Namibia and South Africa (Findlay *et al.* 1992). They have also been recorded around St. Helena (Clingham *et al.* 2013). Predation events by killer whales or false killer whales in the Uruguayan longline fishery were recorded north of the Libra Massif survey area (Passadore *et al.* 2014, 2015). Although there are no OBIS records of false killer whales for the offshore waters of the proposed project area, there are 91 records for the South Atlantic, including offshore waters off South America and nearshore waters of Namibia and South Africa; however, there are no records near the proposed survey areas (OBIS 2019). Based on its distributional range (Best 2007; Jefferson *et al.* 2015), the false killer whale could be encountered in the proposed project areas.

Pygmy Killer Whale

The pygmy killer whale has a worldwide distribution in tropical and subtropical waters, generally not ranging south of 35° S (Jefferson *et al.* 2015). It is known to inhabit the warm waters of the Indian, Pacific, and Atlantic oceans (Jefferson *et al.* 2015). It can be found in nearshore areas where the water is deep and in offshore waters (Jefferson *et al.* 2015). In the southeast Atlantic, there are stranding records along the coast of southern Africa, including Namibia (Findlay *et al.* 1992). There is one stranding record for Brazil (Santos *et al.* 2010). There are seven OBIS records for the Southeast Atlantic Ocean, but no records for the offshore waters of the proposed survey areas (OBIS 2019). Based on its distributional range (Best 2007; Jefferson *et al.* 2015), the pygmy killer whale could be encountered in the proposed survey areas.

Melon-Headed Whale

The melon-headed whale is an oceanic species found worldwide in tropical and subtropical waters from ~40° N to 35° S (Jefferson *et al.* 2015). It occurs most often in deep offshore waters and occasionally in nearshore areas where the water is deep (Jefferson *et al.* 2015). Off the west coast of Africa, melon-headed whales have been recorded off Gabon (de Boer 2010; Weir 2011) and Angola (Weir 2007a, 2010, 2011). Four sightings were made during seismic surveys off the coast of northern Angola between 2004 and 2009, all in water deeper than 1000 m (Weir 2011). Extralimital record exists for South Africa (Peddemors 1999; Jefferson *et al.* 2015). There is one OBIS record for South Africa (OBIS 2019). Based on its distributional range (Best 2007; Jefferson *et al.* 2015), melon-headed whale could be encountered in the northern portion of the Valdivia Bank survey area.

Pinnipeds

Subantarctic Fur Seal

Subantarctic fur seals occur between 10° W and 170° E north of the Antarctic Polar Front in the Southern Ocean (Hofmeyr and Bester 2018). Breeding occurs on several islands, with Gough Island in the central South Atlantic accounting for about two thirds of pup production (Hofmeyr and Bester 2018), but adults take long foraging journeys away from these colonies. Vagrant subantarctic fur seals have been reported in South Africa (Shaughnessy and Ross 1980). The at-sea distribution of subantarctic fur seals is poorly understood, although they are often seen in the waters between Tristan da Cunha and South Africa (Bester and Ryan 2007). There are 35 OBIS records for the South Atlantic, including in nearshore and offshore waters of South Africa, and 21 records at 40.3° S, 9.9° W; however, there are no records for the proposed project area (OBIS 2019).

Cape Fur Seal

The Cape fur seal is endemic to the west coast of southern Africa, occurring from Algoa Bay, South Africa to Ilha dos Tigres, Angola (Kirkman *et al.* 2013). The population severely declined between the 17th and 19th century, due to sealing and guano collection on many of the breeding islands (Kirkman *et al.* 2007). However, the population recovered when sealing limits were imposed in the early 20th century, and the population is now estimated to number ~2 million individuals (Kirkman *et al.* 2007). There have also been two mass die-offs of Cape fur seals in Namibia that were related to poor environmental conditions and reduced prey (Roux *et al.* 2002 *in* Kirkman *et al.* 2007).

The Cape fur seal currently breeds at 40 colonies along the coast of South Africa, Namibia, and Angola, including on the mainland and nearshore islands (Kirkman *et al.* 2013). There have been several new breeding colonies established in recent years, as the population has shifted northward (Kirkman *et al.* 2013). More than half of the seal population occurs in Namibia (Wickens *et al.* 1991). High densities have been observed between 30 and 60 n.mi. from shore, with densities dropping farther offshore (Thomas and Schülein 1988). Cape fur seals typically forage over the shelf up to ~220 km offshore (Shaughnessy 1979), but they are known to travel distances up to 1970 km along the coast of South America (Oosthuizen 1991). Breeding occurs during November and December (Warneke and Shaughnessy 1985 *in* Kirkman and Arnould 2018). There are over 2000 OBIS records along the coasts of Namibia and South Africa, but no records for the offshore survey areas. As Cape fur seals typically remain over the shelf to forage and are breeding during the time of the survey, they are unlikely to be encountered in the offshore project area.

Crabeater Seal

Crabeater seals have a circumpolar distribution off Antarctica and generally spend the entire year in the advancing and retreating pack ice; occasionally they are seen in the far southern areas of South America though this is uncommon (Bengtson and Stewart 2018). Vagrants are occasionally found as far north as Brazil (Oliveira *et al.* 2006). Telemetry studies show that crabeater seals are generally confined to the pack ice, but spend ~14 percent of their time in open water outside of the breeding season (reviewed in Southwell *et al.* 2012). During the breeding season crabeater seals were most likely to be present within 5° or less (~550 km) of the shelf break in the south, though non-breeding animals ranged further north. Pupping season peaks in mid- to late-October and adults are observed with their pubs as late as mid-December (Bengtson and Stewart 2018). There are two records of crabeater seals for South Africa in the OBIS database (OBIS 2019).

Leopard Seal

The leopard seal has a circumpolar distribution around the Antarctic continent where it is solitary and widely dispersed (Rogers 2018). Leopard seals are top predators, consuming everything from krill and fish to penguins and other seals (*e.g.,* Hall-Aspland and Rogers 2004; Hirukie *et al.* 1999). Pups are born during October to mid-November and weaned approximately one month later (Rogers 2018). Mating occurs in the water during December and January. There is one record for South Africa in the OBIS database (OBIS 2019).

Southern Elephant Seal

The southern elephant seal has a near circumpolar distribution in the Southern Hemisphere (Jefferson *et al.* 2015), with breeding sites located on islands throughout the subantarctic (Hindell 2018). In the South Atlantic, southern elephant seals breed at Patagonia, South Georgia, and other islands of the Scotia Arc, Falkland Islands, Bouvet Island, and Tristan da Cunha archipelago (Bester and Ryan 2007). Península Valdés, Argentina is the sole continental South American large breeding colony, where tens of thousands of southern elephant seals congregate (Lewis *et al.* 2006). Breeding colonies are otherwise island-based, with the occasional exception of the Antarctic mainland (Hindell 2018).

When not breeding (September–October) or molting (November–April), southern elephant seals range throughout the Southern Ocean from areas north of the Antarctic Polar Front to the pack ice of the Antarctic, spending >80 percent of their time at sea each year, up to 90 percent of which is spent submerged while hunting, travelling and resting in water depths ≥200 m (Hindell 2018). Males generally feed in continental shelf waters, while females preferentially feed in ice-free Antarctic Polar Front waters or the marginal ice zone in accordance with winter ice expansion (Hindell 2018). Southern elephant seals tagged at South Georgia showed long-range movements from ~April through October into the open Southern Ocean and to the shelf of the Antarctic Peninsula (McConnell and Fedak 1996). One adult male that was sighted on Gough Island had previously been tagged at Marion Island in the Indian Ocean (Reisinger and Bester 2010). Vagrant southern elephant seals, mainly consisting of juvenile and subadult males, have been documented in Uruguay, Brazil, Argentina, Falkland Islands, and South Georgia (Lewis *et al.* 2006a; Oliveira *et al.* 2011; Mayorga *et al.* 2015). For the South Atlantic, there are more than 2000 OBIS records for the nearshore and offshore waters of South America and along the coasts of Namibia and South Africa (OBIS 2019). Most of the records (1793) are for waters of the Patagonian Large Marine Ecosystem (Campagna *et al.* 2006), but none occur within the proposed project area.

Marine Mammal Hearing

Hearing is the most important sensory modality for marine mammals underwater, and exposure to anthropogenic sound can have deleterious effects. To appropriately assess the potential effects of exposure to sound, it is necessary to understand the frequency ranges marine mammals are able to hear. Current data indicate that not all marine mammal species have equal hearing capabilities (*e.g.,* Richardson *et al.,* 1995; Wartzok and Ketten, 1999; Au and Hastings, 2008). To reflect this, Southall *et al.* (2007) recommended that marine mammals be divided into functional hearing groups based on directly measured or estimated hearing ranges on the basis of available behavioral response data, audiograms derived using auditory evoked potential techniques, anatomical modeling, and other data. Note that no direct measurements of hearing ability have been successfully completed for mysticetes (*i.e.,* low-frequency cetaceans). Subsequently, NMFS (2018) described generalized hearing ranges for these marine mammal hearing groups. Generalized hearing ranges were chosen based on the approximately 65 decibel (dB) threshold from the normalized composite audiograms, with the exception for lower limits for low-frequency cetaceans where the lower bound was deemed to be biologically implausible and the lower bound from Southall *et al.* (2007) retained. Marine mammal hearing groups and their associated hearing ranges are provided in Table 3.

TABLE 3—MARINE MAMMAL HEARING GROUPS

[NMFS, 2018]

Hearing group	Generalized hearing range *
Low-frequency (LF) cetaceans (baleen whales)	7 Hz to 35 kHz.
Mid-frequency (MF) cetaceans (dolphins, toothed whales, beaked whales, bottlenose whales)	150 Hz to 160 kHz.
High-frequency (HF) cetaceans (true porpoises, *Kogia,* river dolphins, cephalorhynchid, *Lagenorhynchus cruciger* & *L. australis*).	275 Hz to 160 kHz.
Phocid pinnipeds (PW) (underwater) (true seals)	50 Hz to 86 kHz.
Otariid pinnipeds (OW) (underwater) (sea lions and fur seals)	60 Hz to 39 kHz.

* Represents the generalized hearing range for the entire group as a composite (*i.e.,* all species within the group), where individual species' hearing ranges are typically not as broad. Generalized hearing range chosen based on ~65 dB threshold from normalized composite audiogram, with the exception for lower limits for LF cetaceans (Southall *et al.* 2007) and PW pinniped (approximation).

The pinniped functional hearing group was modified from Southall *et al.* (2007) on the basis of data indicating that phocid species have consistently demonstrated an extended frequency range of hearing compared to otariids, especially in the higher frequency range (Hemilä *et al.,* 2006; Kastelein *et al.,* 2009; Reichmuth and Holt, 2013).

For more detail concerning these groups and associated frequency ranges, please see NMFS (2018) for a review of available information. Forty-eight marine mammal species (43 cetacean and 5 pinniped (2 otariid and 3 phocid) species) have the reasonable potential to co-occur with the proposed survey activities. Please refer to Table 2. Of the cetacean species that may be present, 9 are classified as low-frequency cetaceans (*i.e.,* all mysticete species), 31 are classified as mid-frequency cetaceans (*i.e.,* most delphinid and ziphiid species and the sperm whale), and 3 are classified as high-frequency cetaceans (*i.e.,* Kogia spp., hourglass dolphin).

Potential Effects of Specified Activities on Marine Mammals and Their Habitat

This section includes a summary and discussion of the ways that components of the specified activity may impact marine mammals and their habitat. The *Estimated Take by Incidental Harassment* section later in this document includes a quantitative analysis of the number of individuals that are expected to be taken by this activity. The *Negligible Impact Analysis and Determination* section considers the content of this section, the *Estimated Take by Incidental Harassment* section, and the *Proposed Mitigation* section, to draw conclusions regarding the likely impacts of these activities on the reproductive success or survivorship of individuals and how those impacts on individuals are likely to impact marine mammal species or stocks.

Description of Active Acoustic Sound Sources

This section contains a brief technical background on sound, the characteristics of certain sound types, and on metrics used in this proposal inasmuch as the information is relevant to the specified activity and to a discussion of the potential effects of the specified activity on marine mammals found later in this document.

Sound travels in waves, the basic components of which are frequency, wavelength, velocity, and amplitude. Frequency is the number of pressure waves that pass by a reference point per unit of time and is measured in hertz (Hz) or cycles per second. Wavelength is the distance between two peaks or corresponding points of a sound wave (length of one cycle). Higher frequency sounds have shorter wavelengths than lower frequency sounds, and typically attenuate (decrease) more rapidly, except in certain cases in shallower water. Amplitude is the height of the sound pressure wave or the ''loudness'' of a sound and is typically described using the relative unit of the dB. A sound pressure level (SPL) in dB is described as the ratio between a measured pressure and a reference pressure (for underwater sound, this is 1 microPascal (μPa)) and is a logarithmic unit that accounts for large variations in amplitude; therefore, a relatively small change in dB corresponds to large changes in sound pressure. The source level (SL) represents the SPL referenced at a distance of 1 m from the source (referenced to 1 μPa) while the received level is the SPL at the listener's position (referenced to 1 μPa).

Root mean square (rms) is the quadratic mean sound pressure over the duration of an impulse. Root mean square is calculated by squaring all of the sound amplitudes, averaging the squares, and then taking the square root of the average (Urick, 1983). Root mean square accounts for both positive and negative values; squaring the pressures makes all values positive so that they may be accounted for in the summation of pressure levels (Hastings and Popper, 2005). This measurement is often used in the context of discussing behavioral effects, in part because behavioral effects, which often result from auditory cues, may be better expressed through averaged units than by peak pressures.

Sound exposure level (SEL; represented as dB re 1 μPa^2-s) represents the total energy contained within a pulse and considers both intensity and duration of exposure. Peak sound pressure (also referred to as zero-to-peak sound pressure or 0-p) is the maximum instantaneous sound pressure measurable in the water at a specified distance from the source and is represented in the same units as the rms sound pressure. Another common metric is peak-to-peak sound pressure (pk-pk), which is the algebraic difference between the peak positive and peak negative sound pressures. Peak-to-peak pressure is typically approximately 6 dB higher than peak pressure (Southall *et al.,* 2007).

When underwater objects vibrate or activity occurs, sound-pressure waves are created. These waves alternately compress and decompress the water as the sound wave travels. Underwater sound waves radiate in a manner similar to ripples on the surface of a pond and may be either directed in a beam or beams or may radiate in all directions (omnidirectional sources), as is the case for pulses produced by the airgun arrays considered here. The compressions and decompressions associated with sound waves are detected as changes in pressure by aquatic life and man-made sound receptors such as hydrophones.

Even in the absence of sound from the specified activity, the underwater environment is typically loud due to ambient sound. Ambient sound is defined as environmental background sound levels lacking a single source or point (Richardson *et al.,* 1995), and the sound level of a region is defined by the total acoustical energy being generated by known and unknown sources. These sources may include physical (*e.g.,* wind and waves, earthquakes, ice, atmospheric sound), biological (*e.g.,* sounds produced by marine mammals, fish, and invertebrates), and anthropogenic (*e.g.,* vessels, dredging, construction) sound. A number of sources contribute to ambient sound, including the following (Richardson *et al.,* 1995):

- *Wind and waves:* The complex interactions between wind and water surface, including processes such as breaking waves and wave-induced bubble oscillations and cavitation, are a main source of naturally occurring ambient sound for frequencies between 200 Hz and 50 kHz (Mitson, 1995). In general, ambient sound levels tend to increase with increasing wind speed and wave height. Surf sound becomes important near shore, with measurements collected at a distance of 8.5 km from shore showing an increase of 10 dB in the 100 to 700 Hz band during heavy surf conditions;
- *Precipitation:* Sound from rain and hail impacting the water surface can become an important component of total sound at frequencies above 500 Hz, and possibly down to 100 Hz during quiet times;
- *Biological:* Marine mammals can contribute significantly to ambient sound levels, as can some fish and snapping shrimp. The frequency band for biological contributions is from approximately 12 Hz to over 100 kHz; and
- *Anthropogenic:* Sources of ambient sound related to human activity include transportation (surface vessels), dredging and construction, oil and gas drilling and production, seismic surveys, sonar, explosions, and ocean acoustic studies. Vessel noise typically dominates the total ambient sound for frequencies between 20 and 300 Hz. In general, the frequencies of anthropogenic sounds are below 1 kHz and, if higher frequency sound levels are created, they attenuate rapidly. Sound from identifiable anthropogenic sources other than the activity of interest (*e.g.,* a passing vessel) is sometimes termed background sound, as opposed to ambient sound.

The sum of the various natural and anthropogenic sound sources at any given location and time—which comprise ''ambient'' or ''background'' sound—depends not only on the source levels (as determined by current weather conditions and levels of biological and human activity) but also on the ability of sound to propagate through the environment. In turn, sound propagation is dependent on the spatially and temporally varying properties of the water column and sea floor, and is frequency-dependent. As a result of the dependence on a large number of varying factors, ambient sound levels can be expected to vary widely over both coarse and fine spatial and temporal scales. Sound levels at a given frequency and location can vary by 10–20 dB from day to day (Richardson *et al.,* 1995). The result is that, depending on the source type and its intensity, sound from a given activity may be a negligible addition to the local environment or could form a distinctive signal that may affect marine mammals. Details of source types are described in the following text.

Sounds are often considered to fall into one of two general types: Pulsed and non-pulsed (defined in the following). The distinction between these two sound types is important because they have differing potential to cause physical effects, particularly with regard to hearing (*e.g.,* Ward, 1997 in Southall *et al.,* 2007). Please see Southall *et al.* (2007) for an in-depth discussion of these concepts.

Pulsed sound sources (*e.g.,* airguns, explosions, gunshots, sonic booms,

impact pile driving) produce signals that are brief (typically considered to be less than one second), broadband, atonal transients (ANSI, 1986, 2005; Harris, 1998; NIOSH, 1998; ISO, 2003) and occur either as isolated events or repeated in some succession. Pulsed sounds are all characterized by a relatively rapid rise from ambient pressure to a maximal pressure value followed by a rapid decay period that may include a period of diminishing, oscillating maximal and minimal pressures, and generally have an increased capacity to induce physical injury as compared with sounds that lack these features.

Non-pulsed sounds can be tonal, narrowband, or broadband, brief or prolonged, and may be either continuous or non-continuous (ANSI, 1995; NIOSH, 1998). Some of these non-pulsed sounds can be transient signals of short duration but without the essential properties of pulses (*e.g.,* rapid rise time). Examples of non-pulsed sounds include those produced by vessels, aircraft, machinery operations such as drilling or dredging, vibratory pile driving, and active sonar systems (such as those used by the U.S. Navy). The duration of such sounds, as received at a distance, can be greatly extended in a highly reverberant environment.

Airgun arrays produce pulsed signals with energy in a frequency range from about 10–2,000 Hz, with most energy radiated at frequencies below 200 Hz. The amplitude of the acoustic wave emitted from the source is equal in all directions (*i.e.,* omnidirectional), but airgun arrays do possess some directionality due to different phase delays between guns in different directions. Airgun arrays are typically tuned to maximize functionality for data acquisition purposes, meaning that sound transmitted in horizontal directions and at higher frequencies is minimized to the extent possible.

As described above, a Kongsberg EM 300 MBES and a Knudsen Chirp 3260 SBP would be operated continuously during the proposed surveys, but not during transit to and from the survey areas. Each ping emitted by the MBES consists of eight (in water >1,000 m deep) or four (<1,000 m) successive fan-shaped transmissions, each ensonifying a sector that extends 1° fore-aft. Given the movement and speed of the vessel, the intermittent and narrow downward-directed nature of the sounds emitted by the MBES would result in no more than one or two brief ping exposures of any individual marine mammal, if any exposure were to occur.

Due to the lower source levels of the Knudsen Chirp 3260 SBP relative to the *Thompson's* airgun array (maximum SL of 222 dB re 1 μPa · m for the SBP, versus a minimum of 230.9 dB re 1 μPa · m for the 2 airgun array (LGL, 2019)), sounds from the SBP are expected to be effectively subsumed by sounds from the airgun array. Thus, any marine mammal potentially exposed to sounds from the SBP would already have been exposed to sounds from the airgun array, which are expected to propagate further in the water.

As such, we conclude that the likelihood of marine mammal take resulting from exposure to sound from the MBES or SBP (beyond that which is already quantified as a result of exposure to the airguns) is discountable. Therefore, we do not consider noise from the MBES or SBP further in this analysis.

Acoustic Effects

Here, we discuss the effects of active acoustic sources on marine mammals.

Potential Effects of Underwater Sound—Please refer to the information given previously (*Description of Active Acoustic Sound Sources* section) regarding sound, characteristics of sound types, and metrics used in this document. Anthropogenic sounds cover a broad range of frequencies and sound levels and can have a range of highly variable impacts on marine life, from none or minor to potentially severe responses, depending on received levels, duration of exposure, behavioral context, and various other factors. The potential effects of underwater sound from active acoustic sources can potentially result in one or more of the following: Temporary or permanent hearing impairment, non-auditory physical or physiological effects, behavioral disturbance, stress, and masking (Richardson *et al.,* 1995; Gordon *et al.,* 2004; Nowacek *et al.,* 2007; Southall *et al.,* 2007; Götz *et al.,* 2009). The degree of effect is intrinsically related to the signal characteristics, received level, distance from the source, and duration of the sound exposure. In general, sudden, high level sounds can cause hearing loss, as can longer exposures to lower level sounds. Temporary or permanent loss of hearing will occur almost exclusively for noise within an animal's hearing range. We first describe specific manifestations of acoustic effects before providing discussion specific to the use of airgun arrays.

Richardson *et al.* (1995) described zones of increasing intensity of effect that might be expected to occur, in relation to distance from a source and assuming that the signal is within an animal's hearing range. First is the area within which the acoustic signal would be audible (potentially perceived) to the animal, but not strong enough to elicit any overt behavioral or physiological response. The next zone corresponds with the area where the signal is audible to the animal and of sufficient intensity to elicit behavioral or physiological responsiveness. Third is a zone within which, for signals of high intensity, the received level is sufficient to potentially cause discomfort or tissue damage to auditory or other systems. Overlaying these zones to a certain extent is the area within which masking (*i.e.,* when a sound interferes with or masks the ability of an animal to detect a signal of interest that is above the absolute hearing threshold) may occur; the masking zone may be highly variable in size.

We describe the more severe effects of certain non-auditory physical or physiological effects only briefly as we do not expect that use of airgun arrays are reasonably likely to result in such effects (see below for further discussion). Potential effects from impulsive sound sources can range in severity from effects such as behavioral disturbance or tactile perception to physical discomfort, slight injury of the internal organs and the auditory system, or mortality (Yelverton *et al.,* 1973). Non-auditory physiological effects or injuries that theoretically might occur in marine mammals exposed to high level underwater sound or as a secondary effect of extreme behavioral reactions (*e.g.,* change in dive profile as a result of an avoidance reaction) caused by exposure to sound include neurological effects, bubble formation, resonance effects, and other types of organ or tissue damage (Cox *et al.,* 2006; Southall *et al.,* 2007; Zimmer and Tyack, 2007; Tal *et al.,* 2015). The survey activities considered here do not involve the use of devices such as explosives or mid-frequency tactical sonar that are associated with these types of effects.

Threshold Shift—Marine mammals exposed to high-intensity sound, or to lower-intensity sound for prolonged periods, can experience hearing threshold shift (TS), which is the loss of hearing sensitivity at certain frequency ranges (Finneran, 2015). TS can be permanent (PTS), in which case the loss of hearing sensitivity is not fully recoverable, or temporary (TTS), in which case the animal's hearing threshold would recover over time (Southall *et al.,* 2007). Repeated sound exposure that leads to TTS could cause PTS. In severe cases of PTS, there can be total or partial deafness, while in

most cases the animal has an impaired ability to hear sounds in specific frequency ranges (Kryter, 1985).

When PTS occurs, there is physical damage to the sound receptors in the ear (*i.e.,* tissue damage), whereas TTS represents primarily tissue fatigue and is reversible (Southall *et al.,* 2007). In addition, other investigators have suggested that TTS is within the normal bounds of physiological variability and tolerance and does not represent physical injury (*e.g.,* Ward, 1997). Therefore, NMFS does not consider TTS to constitute auditory injury.

Relationships between TTS and PTS thresholds have not been studied in marine mammals, and there is no PTS data for cetaceans but such relationships are assumed to be similar to those in humans and other terrestrial mammals. PTS typically occurs at exposure levels at least several dBs above (a 40-dB threshold shift approximates PTS onset; *e.g.,* Kryter *et al.,* 1966; Miller, 1974) that inducing mild TTS (a 6-dB threshold shift approximates TTS onset; *e.g.,* Southall *et al.* 2007). Based on data from terrestrial mammals, a precautionary assumption is that the PTS thresholds for impulse sounds (such as airgun pulses as received close to the source) are at least 6 dB higher than the TTS threshold on a peak-pressure basis and PTS cumulative sound exposure level thresholds are 15 to 20 dB higher than TTS cumulative sound exposure level thresholds (Southall *et al.,* 2007). Given the higher level of sound or longer exposure duration necessary to cause PTS as compared with TTS, it is considerably less likely that PTS could occur.

For mid-frequency cetaceans in particular, potential protective mechanisms may help limit onset of TTS or prevent onset of PTS. Such mechanisms include dampening of hearing, auditory adaptation, or behavioral amelioration (*e.g.,* Nachtigall and Supin, 2013; Miller *et al.,* 2012; Finneran *et al.,* 2015; Popov *et al.,* 2016).

TTS is the mildest form of hearing impairment that can occur during exposure to sound (Kryter, 1985). While experiencing TTS, the hearing threshold rises, and a sound must be at a higher level in order to be heard. In terrestrial and marine mammals, TTS can last from minutes or hours to days (in cases of strong TTS). In many cases, hearing sensitivity recovers rapidly after exposure to the sound ends. Few data on sound levels and durations necessary to elicit mild TTS have been obtained for marine mammals.

Marine mammal hearing plays a critical role in communication with conspecifics, and interpretation of environmental cues for purposes such as predator avoidance and prey capture. Depending on the degree (elevation of threshold in dB), duration (*i.e.,* recovery time), and frequency range of TTS, and the context in which it is experienced, TTS can have effects on marine mammals ranging from discountable to serious. For example, a marine mammal may be able to readily compensate for a brief, relatively small amount of TTS in a non-critical frequency range that occurs during a time where ambient noise is lower and there are not as many competing sounds present. Alternatively, a larger amount and longer duration of TTS sustained during time when communication is critical for successful mother/calf interactions could have more serious impacts.

Finneran *et al.* (2015) measured hearing thresholds in three captive bottlenose dolphins before and after exposure to ten pulses produced by a seismic airgun in order to study TTS induced after exposure to multiple pulses. Exposures began at relatively low levels and gradually increased over a period of several months, with the highest exposures at peak SPLs from 196 to 210 dB and cumulative (unweighted) SELs from 193–195 dB. No substantial TTS was observed. In addition, behavioral reactions were observed that indicated that animals can learn behaviors that effectively mitigate noise exposures (although exposure patterns must be learned, which is less likely in wild animals than for the captive animals considered in this study). The authors note that the failure to induce more significant auditory effects likely due to the intermittent nature of exposure, the relatively low peak pressure produced by the acoustic source, and the low-frequency energy in airgun pulses as compared with the frequency range of best sensitivity for dolphins and other mid-frequency cetaceans.

Currently, TTS data only exist for four species of cetaceans (bottlenose dolphin, beluga whale, harbor porpoise, and Yangtze finless porpoise) exposed to a limited number of sound sources (*i.e.,* mostly tones and octave-band noise) in laboratory settings (Finneran, 2015). In general, harbor porpoises have a lower TTS onset than other measured cetacean species (Finneran, 2015). Additionally, the existing marine mammal TTS data come from a limited number of individuals within these species. There are no data available on noise-induced hearing loss for mysticetes.

Critical questions remain regarding the rate of TTS growth and recovery after exposure to intermittent noise and the effects of single and multiple pulses. Data at present are also insufficient to construct generalized models for recovery and determine the time necessary to treat subsequent exposures as independent events. More information is needed on the relationship between auditory evoked potential and behavioral measures of TTS for various stimuli. For summaries of data on TTS in marine mammals or for further discussion of TTS onset thresholds, please see Southall *et al.* (2007), Finneran and Jenkins (2012), Finneran (2015), and NMFS (2018).

Behavioral Effects—Behavioral disturbance may include a variety of effects, including subtle changes in behavior (*e.g.,* minor or brief avoidance of an area or changes in vocalizations), more conspicuous changes in similar behavioral activities, and more sustained and/or potentially severe reactions, such as displacement from or abandonment of high-quality habitat. Behavioral responses to sound are highly variable and context-specific and any reactions depend on numerous intrinsic and extrinsic factors (*e.g.,* species, state of maturity, experience, current activity, reproductive state, auditory sensitivity, time of day), as well as the interplay between factors (*e.g.,* Richardson *et al.,* 1995; Wartzok *et al.,* 2003; Southall *et al.,* 2007; Weilgart, 2007; Archer *et al.,* 2010). Behavioral reactions can vary not only among individuals but also within an individual, depending on previous experience with a sound source, context, and numerous other factors (Ellison *et al.,* 2012), and can vary depending on characteristics associated with the sound source (*e.g.,* whether it is moving or stationary, number of sources, distance from the source). Please see Appendices B–C of Southall *et al.* (2007) for a review of studies involving marine mammal behavioral responses to sound.

Habituation can occur when an animal's response to a stimulus wanes with repeated exposure, usually in the absence of unpleasant associated events (Wartzok *et al.,* 2003). Animals are most likely to habituate to sounds that are predictable and unvarying. It is important to note that habituation is appropriately considered as a ''progressive reduction in response to stimuli that are perceived as neither aversive nor beneficial,'' rather than as, more generally, moderation in response to human disturbance (Bejder *et al.,* 2009). The opposite process is sensitization, when an unpleasant experience leads to subsequent responses, often in the form of

avoidance, at a lower level of exposure. As noted, behavioral state may affect the type of response. For example, animals that are resting may show greater behavioral change in response to disturbing sound levels than animals that are highly motivated to remain in an area for feeding (Richardson *et al.,* 1995; NRC, 2003; Wartzok *et al.,* 2003). Controlled experiments with captive marine mammals have showed pronounced behavioral reactions, including avoidance of loud sound sources (Ridgway *et al.,* 1997). Observed responses of wild marine mammals to loud pulsed sound sources (typically seismic airguns or acoustic harassment devices) have been varied but often consist of avoidance behavior or other behavioral changes suggesting discomfort (Morton and Symonds, 2002; see also Richardson *et al.,* 1995; Nowacek *et al.,* 2007). However, many delphinids approach acoustic source vessels with no apparent discomfort or obvious behavioral change (*e.g.,* Barkaszi *et al.,* 2012).

Available studies show wide variation in response to underwater sound; therefore, it is difficult to predict specifically how any given sound in a particular instance might affect marine mammals perceiving the signal. If a marine mammal does react briefly to an underwater sound by changing its behavior or moving a small distance, the impacts of the change are unlikely to be significant to the individual, l*et al*one the stock or population. However, if a sound source displaces marine mammals from an important feeding or breeding area for a prolonged period, impacts on individuals and populations could be significant (*e.g.,* Lusseau and Bejder, 2007; Weilgart, 2007; NRC, 2005). However, there are broad categories of potential response, which we describe in greater detail here, that include alteration of dive behavior, alteration of foraging behavior, effects to breathing, interference with or alteration of vocalization, avoidance, and flight.

Changes in dive behavior can vary widely, and may consist of increased or decreased dive times and surface intervals as well as changes in the rates of ascent and descent during a dive (*e.g.,* Frankel and Clark, 2000; Ng and Leung, 2003; Nowacek *et al.,* 2004; Goldbogen *et al.,* 2013a, b). Variations in dive behavior may reflect interruptions in biologically significant activities (*e.g.,* foraging) or they may be of little biological significance. The impact of an alteration to dive behavior resulting from an acoustic exposure depends on what the animal is doing at the time of the exposure and the type and magnitude of the response.

Disruption of feeding behavior can be difficult to correlate with anthropogenic sound exposure, so it is usually inferred by observed displacement from known foraging areas, the appearance of secondary indicators (*e.g.,* bubble nets or sediment plumes), or changes in dive behavior. As for other types of behavioral response, the frequency, duration, and temporal pattern of signal presentation, as well as differences in species sensitivity, are likely contributing factors to differences in response in any given circumstance (*e.g.,* Croll *et al.,* 2001; Nowacek *et al.;* 2004; Madsen *et al.,* 2006; Yazvenko *et al.,* 2007). A determination of whether foraging disruptions incur fitness consequences would require information on or estimates of the energetic requirements of the affected individuals and the relationship between prey availability, foraging effort and success, and the life history stage of the animal.

Visual tracking, passive acoustic monitoring, and movement recording tags were used to quantify sperm whale behavior prior to, during, and following exposure to airgun arrays at received levels in the range 140–160 dB at distances of 7–13 km, following a phase-in of sound intensity and full array exposures at 1–13 km (Madsen *et al.,* 2006; Miller *et al.,* 2009). Sperm whales did not exhibit horizontal avoidance behavior at the surface. However, foraging behavior may have been affected. The sperm whales exhibited 19 percent less vocal (buzz) rate during full exposure relative to post exposure, and the whale that was approached most closely had an extended resting period and did not resume foraging until the airguns had ceased firing. The remaining whales continued to execute foraging dives throughout exposure; however, swimming movements during foraging dives were 6 percent lower during exposure than control periods (Miller *et al.,* 2009). These data raise concerns that seismic surveys may impact foraging behavior in sperm whales, although more data are required to understand whether the differences were due to exposure or natural variation in sperm whale behavior (Miller *et al.,* 2009).

Variations in respiration naturally vary with different behaviors and alterations to breathing rate as a function of acoustic exposure can be expected to co-occur with other behavioral reactions, such as a flight response or an alteration in diving. However, respiration rates in and of themselves may be representative of annoyance or an acute stress response. Various studies have shown that respiration rates may either be unaffected or could increase, depending on the species and signal characteristics, again highlighting the importance in understanding species differences in the tolerance of underwater noise when determining the potential for impacts resulting from anthropogenic sound exposure (*e.g.,* Kastelein *et al.,* 2001, 2005, 2006; Gailey *et al.,* 2007, 2016).

Marine mammals vocalize for different purposes and across multiple modes, such as whistling, echolocation click production, calling, and singing. Changes in vocalization behavior in response to anthropogenic noise can occur for any of these modes and may result from a need to compete with an increase in background noise or may reflect increased vigilance or a startle response. For example, in the presence of potentially masking signals, humpback whales and killer whales have been observed to increase the length of their songs (Miller *et al.,* 2000; Fristrup *et al.,* 2003; Foote *et al.,* 2004), while right whales have been observed to shift the frequency content of their calls upward while reducing the rate of calling in areas of increased anthropogenic noise (Parks *et al.,* 2007). In some cases, animals may cease sound production during production of aversive signals (Bowles *et al.,* 1994).

Cerchio *et al.* (2014) used passive acoustic monitoring to document the presence of singing humpback whales off the coast of northern Angola and to opportunistically test for the effect of seismic survey activity on the number of singing whales. Two recording units were deployed between March and December 2008 in the offshore environment; numbers of singers were counted every hour. Generalized Additive Mixed Models were used to assess the effect of survey day (seasonality), hour (diel variation), moon phase, and received levels of noise (measured from a single pulse during each ten minute sampled period) on singer number. The number of singers significantly decreased with increasing received level of noise, suggesting that humpback whale breeding activity was disrupted to some extent by the survey activity.

Castellote *et al.* (2012) reported acoustic and behavioral changes by fin whales in response to shipping and airgun noise. Acoustic features of fin whale song notes recorded in the Mediterranean Sea and northeast Atlantic Ocean were compared for areas with different shipping noise levels and traffic intensities and during a seismic airgun survey. During the first 72 h of the survey, a steady decrease in song received levels and bearings to singers

indicated that whales moved away from the acoustic source and out of the study area. This displacement persisted for a time period well beyond the 10-day duration of seismic airgun activity, providing evidence that fin whales may avoid an area for an extended period in the presence of increased noise. The authors hypothesize that fin whale acoustic communication is modified to compensate for increased background noise and that a sensitization process may play a role in the observed temporary displacement.

Seismic pulses at average received levels of 131 dB re 1 μPa^2-s caused blue whales to increase call production (Di Iorio and Clark, 2010). In contrast, McDonald *et al.* (1995) tracked a blue whale with seafloor seismometers and reported that it stopped vocalizing and changed its travel direction at a range of 10 km from the acoustic source vessel (estimated received level 143 dB pk-pk). Blackwell *et al.* (2013) found that bowhead whale call rates dropped significantly at onset of airgun use at sites with a median distance of 41–45 km from the survey. Blackwell *et al.* (2015) expanded this analysis to show that whales actually increased calling rates as soon as airgun signals were detectable before ultimately decreasing calling rates at higher received levels (*i.e.,* 10-minute SEL_{cum} of ~127 dB). Overall, these results suggest that bowhead whales may adjust their vocal output in an effort to compensate for noise before ceasing vocalization effort and ultimately deflecting from the acoustic source (Blackwell *et al.,* 2013, 2015). These studies demonstrate that even low levels of noise received far from the source can induce changes in vocalization and/or behavior for mysticetes.

Avoidance is the displacement of an individual from an area or migration path as a result of the presence of a sound or other stressors, and is one of the most obvious manifestations of disturbance in marine mammals (Richardson *et al.,* 1995). For example, gray whales are known to change direction—deflecting from customary migratory paths—in order to avoid noise from seismic surveys (Malme *et al.,* 1984). Humpback whales showed avoidance behavior in the presence of an active seismic array during observational studies and controlled exposure experiments in western Australia (McCauley *et al.,* 2000). Avoidance may be short-term, with animals returning to the area once the noise has ceased (*e.g.,* Bowles *et al.,* 1994; Goold, 1996; Stone *et al.,* 2000; Morton and Symonds, 2002; Gailey *et al.,* 2007). Longer-term displacement is possible, however, which may lead to changes in abundance or distribution patterns of the affected species in the affected region if habituation to the presence of the sound does not occur (*e.g.,* Bejder *et al.,* 2006; Teilmann *et al.,* 2006).

A flight response is a dramatic change in normal movement to a directed and rapid movement away from the perceived location of a sound source. The flight response differs from other avoidance responses in the intensity of the response (*e.g.,* directed movement, rate of travel). Relatively little information on flight responses of marine mammals to anthropogenic signals exist, although observations of flight responses to the presence of predators have occurred (Connor and Heithaus, 1996). The result of a flight response could range from brief, temporary exertion and displacement from the area where the signal provokes flight to, in extreme cases, marine mammal strandings (Evans and England, 2001). However, it should be noted that response to a perceived predator does not necessarily invoke flight (Ford and Reeves, 2008), and whether individuals are solitary or in groups may influence the response.

Behavioral disturbance can also impact marine mammals in more subtle ways. Increased vigilance may result in costs related to diversion of focus and attention (*i.e.,* when a response consists of increased vigilance, it may come at the cost of decreased attention to other critical behaviors such as foraging or resting). These effects have generally not been demonstrated for marine mammals, but studies involving fish and terrestrial animals have shown that increased vigilance may substantially reduce feeding rates (*e.g.,* Beauchamp and Livoreil, 1997; Fritz *et al.,* 2002; Purser and Radford, 2011). In addition, chronic disturbance can cause population declines through reduction of fitness (*e.g.,* decline in body condition) and subsequent reduction in reproductive success, survival, or both (*e.g.,* Harrington and Veitch, 1992; Daan *et al.,* 1996; Bradshaw *et al.,* 1998). However, Ridgway *et al.* (2006) reported that increased vigilance in bottlenose dolphins exposed to sound over a five-day period did not cause any sleep deprivation or stress effects.

Many animals perform vital functions, such as feeding, resting, traveling, and socializing, on a diel cycle (24-hour cycle). Disruption of such functions resulting from reactions to stressors such as sound exposure are more likely to be significant if they last more than one diel cycle or recur on subsequent days (Southall *et al.,* 2007). Consequently, a behavioral response lasting less than one day and not recurring on subsequent days is not considered particularly severe unless it could directly affect reproduction or survival (Southall *et al.,* 2007). Note that there is a difference between multi-day substantive behavioral reactions and multi-day anthropogenic activities. For example, just because an activity lasts for multiple days does not necessarily mean that individual animals are either exposed to activity-related stressors for multiple days or, further, exposed in a manner resulting in sustained multi-day substantive behavioral responses.

Stone (2015) reported data from at-sea observations during 1,196 seismic surveys from 1994 to 2010. When large arrays of airguns (considered to be 500 in^3 or more) were firing, lateral displacement, more localized avoidance, or other changes in behavior were evident for most odontocetes. However, significant responses to large arrays were found only for the minke whale and fin whale. Behavioral responses observed included changes in swimming or surfacing behavior, with indications that cetaceans remained near the water surface at these times. Cetaceans were recorded as feeding less often when large arrays were active. Behavioral observations of gray whales during a seismic survey monitored whale movements and respirations pre-, during and post-seismic survey (Gailey *et al.,* 2016). Behavioral state and water depth were the best 'natural' predictors of whale movements and respiration and, after considering natural variation, none of the response variables were significantly associated with seismic survey or vessel sounds.

Stress Responses—An animal's perception of a threat may be sufficient to trigger stress responses consisting of some combination of behavioral responses, autonomic nervous system responses, neuroendocrine responses, or immune responses (*e.g.,* Seyle, 1950; Moberg, 2000). In many cases, an animal's first and sometimes most economical (in terms of energetic costs) response is behavioral avoidance of the potential stressor. Autonomic nervous system responses to stress typically involve changes in heart rate, blood pressure, and gastrointestinal activity. These responses have a relatively short duration and may or may not have a significant long-term effect on an animal's fitness.

Neuroendocrine stress responses often involve the hypothalamus-pituitary-adrenal system. Virtually all neuroendocrine functions that are affected by stress—including immune competence, reproduction, metabolism,

and behavior—are regulated by pituitary hormones. Stress-induced changes in the secretion of pituitary hormones have been implicated in failed reproduction, altered metabolism, reduced immune competence, and behavioral disturbance (*e.g.,* Moberg, 1987; Blecha, 2000). Increases in the circulation of glucocorticoids are also equated with stress (Romano *et al.,* 2004).

The primary distinction between stress (which is adaptive and does not normally place an animal at risk) and ''distress'' is the cost of the response. During a stress response, an animal uses glycogen stores that can be quickly replenished once the stress is alleviated. In such circumstances, the cost of the stress response would not pose serious fitness consequences. However, when an animal does not have sufficient energy reserves to satisfy the energetic costs of a stress response, energy resources must be diverted from other functions. This state of distress will last until the animal replenishes its energetic reserves sufficiently to restore normal function.

Relationships between these physiological mechanisms, animal behavior, and the costs of stress responses are well-studied through controlled experiments and for both laboratory and free-ranging animals (*e.g.,* Holberton *et al.,* 1996; Hood *et al.,* 1998; Jessop *et al.,* 2003; Krausman *et al.,* 2004; Lankford *et al.,* 2005). Stress responses due to exposure to anthropogenic sounds or other stressors and their effects on marine mammals have also been reviewed (Fair and Becker, 2000; Romano *et al.,* 2002b) and, more rarely, studied in wild populations (*e.g.,* Romano *et al.,* 2002a). For example, Rolland *et al.* (2012) found that noise reduction from reduced ship traffic in the Bay of Fundy was associated with decreased stress in North Atlantic right whales. These and other studies lead to a reasonable expectation that some marine mammals will experience physiological stress responses upon exposure to acoustic stressors and that it is possible that some of these would be classified as ''distress.'' In addition, any animal experiencing TTS would likely also experience stress responses (NRC, 2003).

Auditory Masking—Sound can disrupt behavior through masking, or interfering with, an animal's ability to detect, recognize, or discriminate between acoustic signals of interest (*e.g.,* those used for intraspecific communication and social interactions, prey detection, predator avoidance, navigation) (Richardson *et al.,* 1995; Erbe *et al.,* 2016). Masking occurs when the receipt of a sound is interfered with by another coincident sound at similar frequencies and at similar or higher intensity, and may occur whether the sound is natural (*e.g.,* snapping shrimp, wind, waves, precipitation) or anthropogenic (*e.g.,* shipping, sonar, seismic exploration) in origin. The ability of a noise source to mask biologically important sounds depends on the characteristics of both the noise source and the signal of interest (*e.g.,* signal-to-noise ratio, temporal variability, direction), in relation to each other and to an animal's hearing abilities (*e.g.,* sensitivity, frequency range, critical ratios, frequency discrimination, directional discrimination, age or TTS hearing loss), and existing ambient noise and propagation conditions.

Under certain circumstances, marine mammals experiencing significant masking could also be impaired from maximizing their performance fitness in survival and reproduction. Therefore, when the coincident (masking) sound is man-made, it may be considered harassment when disrupting or altering critical behaviors. It is important to distinguish TTS and PTS, which persist after the sound exposure, from masking, which occurs during the sound exposure. Because masking (without resulting in TS) is not associated with abnormal physiological function, it is not considered a physiological effect, but rather a potential behavioral effect.

The frequency range of the potentially masking sound is important in determining any potential behavioral impacts. For example, low-frequency signals may have less effect on high-frequency echolocation sounds produced by odontocetes but are more likely to affect detection of mysticete communication calls and other potentially important natural sounds such as those produced by surf and some prey species. The masking of communication signals by anthropogenic noise may be considered as a reduction in the communication space of animals (*e.g.,* Clark *et al.,* 2009) and may result in energetic or other costs as animals change their vocalization behavior (*e.g.,* Miller *et al.,* 2000; Foote *et al.,* 2004; Parks *et al.,* 2007; Di Iorio and Clark, 2009; Holt *et al.,* 2009). Masking can be reduced in situations where the signal and noise come from different directions (Richardson *et al.,* 1995), through amplitude modulation of the signal, or through other compensatory behaviors (Houser and Moore, 2014). Masking can be tested directly in captive species (*e.g.,* Erbe, 2008), but in wild populations it must be either modeled or inferred from evidence of masking compensation. There are few studies addressing real-world masking sounds likely to be experienced by marine mammals in the wild (*e.g.,* Branstetter *et al.,* 2013).

Masking affects both senders and receivers of acoustic signals and can potentially have long-term chronic effects on marine mammals at the population level as well as at the individual level. Low-frequency ambient sound levels have increased by as much as 20 dB (more than three times in terms of SPL) in the world's ocean from pre-industrial periods, with most of the increase from distant commercial shipping (Hildebrand, 2009). All anthropogenic sound sources, but especially chronic and lower-frequency signals (*e.g.,* from vessel traffic), contribute to elevated ambient sound levels, thus intensifying masking.

Masking effects of pulsed sounds (even from large arrays of airguns) on marine mammal calls and other natural sounds are expected to be limited, although there are few specific data on this. Because of the intermittent nature and low duty cycle of seismic pulses, animals can emit and receive sounds in the relatively quiet intervals between pulses. However, in exceptional situations, reverberation occurs for much or all of the interval between pulses (*e.g.,* Simard *et al.* 2005; Clark and Gagnon 2006), which could mask calls. Situations with prolonged strong reverberation are infrequent. However, it is common for reverberation to cause some lesser degree of elevation of the background level between airgun pulses (*e.g.,* Gedamke 2011; Guerra *et al.* 2011, 2016; Klinck *et al.* 2012; Guan *et al.* 2015), and this weaker reverberation presumably reduces the detection range of calls and other natural sounds to some degree. Guerra *et al.* (2016) reported that ambient noise levels between seismic pulses were elevated as a result of reverberation at ranges of 50 km from the seismic source. Based on measurements in deep water of the Southern Ocean, Gedamke (2011) estimated that the slight elevation of background levels during intervals between pulses reduced blue and fin whale communication space by as much as 36–51 percent when a seismic survey was operating 450–2,800 km away. Based on preliminary modeling, Wittekind *et al.* (2016) reported that airgun sounds could reduce the communication range of blue and fin whales 2000 km from the seismic source. Nieukirk *et al.* (2012) and Blackwell *et al.* (2013) noted the potential for masking effects from seismic surveys on large whales.

Some baleen and toothed whales are known to continue calling in the presence of seismic pulses, and their calls usually can be heard between the pulses (*e.g.,* Nieukirk *et al.* 2012; Thode *et al.* 2012; Bröker *et al.* 2013; Sciacca *et al.* 2016). As noted above, Cerchio *et al.* (2014) suggested that the breeding display of humpback whales off Angola could be disrupted by seismic sounds, as singing activity declined with increasing received levels. In addition, some cetaceans are known to change their calling rates, shift their peak frequencies, or otherwise modify their vocal behavior in response to airgun sounds (*e.g.,* Di Iorio and Clark 2010; Castellote *et al.* 2012; Blackwell *et al.* 2013, 2015). The hearing systems of baleen whales are undoubtedly more sensitive to low-frequency sounds than are the ears of the small odontocetes that have been studied directly (*e.g.,* MacGillivray *et al.* 2014). The sounds important to small odontocetes are predominantly at much higher frequencies than are the dominant components of airgun sounds, thus limiting the potential for masking. In general, masking effects of seismic pulses are expected to be minor, given the normally intermittent nature of seismic pulses.

Ship Noise

Vessel noise from the *Thompson* could affect marine animals in the proposed survey areas. Houghton *et al.* (2015) proposed that vessel speed is the most important predictor of received noise levels, and Putland *et al.* (2017) also reported reduced sound levels with decreased vessel speed. Sounds produced by large vessels generally dominate ambient noise at frequencies from 20 to 300 Hz (Richardson *et al.* 1995). However, some energy is also produced at higher frequencies (Hermannsen *et al.* 2014); low levels of high-frequency sound from vessels has been shown to elicit responses in harbor porpoise (Dyndo *et al.* 2015). Increased levels of ship noise have been shown to affect foraging by porpoise (Teilmann *et al.* 2015; Wisniewska *et al.* 2018); Wisniewska *et al.* (2018) suggest that a decrease in foraging success could have long-term fitness consequences.

Ship noise, through masking, can reduce the effective communication distance of a marine mammal if the frequency of the sound source is close to that used by the animal, and if the sound is present for a significant fraction of time (*e.g.,* Richardson *et al.* 1995; Clark *et al.* 2009; Jensen *et al.* 2009; Gervaise *et al.* 2012; Hatch *et al.* 2012; Rice *et al.* 2014; Dunlop 2015; Erbe *et al.* 2015; Jones *et al.* 2017; Putland *et al.* 2017). In addition to the frequency and duration of the masking sound, the strength, temporal pattern, and location of the introduced sound also play a role in the extent of the masking (Branstetter *et al.* 2013, 2016; Finneran and Branstetter 2013; Sills *et al.* 2017). Branstetter *et al.* (2013) reported that time-domain metrics are also important in describing and predicting masking. In order to compensate for increased ambient noise, some cetaceans are known to increase the source levels of their calls in the presence of elevated noise levels from shipping, shift their peak frequencies, or otherwise change their vocal behavior (*e.g.,* Parks *et al.* 2011, 2012, 2016a,b; Castellote *et al.* 2012; Melcón *et al.* 2012; Azzara *et al.* 2013; Tyack and Janik 2013; Luís *et al.* 2014; Sairanen 2014; Papale *et al.* 2015; Bittencourt *et al.* 2016; Dahlheim and Castellote 2016; Gospić and Picciulin 2016; Gridley *et al.* 2016; Heiler *et al.* 2016; Martins *et al.* 2016; O'Brien *et al.* 2016; Tenessen and Parks 2016). Harp seals did not increase their call frequencies in environments with increased low-frequency sounds (Terhune and Bosker 2016). Holt *et al.* (2015) reported that changes in vocal modifications can have increased energetic costs for individual marine mammals. A negative correlation between the presence of some cetacean species and the number of vessels in an area has been demonstrated by several studies (*e.g.,* Campana *et al.* 2015; Culloch *et al.* 2016).

Baleen whales are thought to be more sensitive to sound at these low frequencies than are toothed whales (*e.g.,* MacGillivray *et al.* 2014), possibly causing localized avoidance of the proposed survey area during seismic operations. Reactions of gray and humpback whales to vessels have been studied, and there is limited information available about the reactions of right whales and rorquals (fin, blue, and minke whales). Reactions of humpback whales to boats are variable, ranging from approach to avoidance (Payne 1978; Salden 1993). Baker *et al.* (1982, 1983) and Baker and Herman (1989) found humpbacks often move away when vessels are within several kilometers. Humpbacks seem less likely to react overtly when actively feeding than when resting or engaged in other activities (Krieger and Wing 1984, 1986). Increased levels of ship noise have been shown to affect foraging by humpback whales (Blair *et al.* 2016). Fin whale sightings in the western Mediterranean were negatively correlated with the number of vessels in the area (Campana *et al.* 2015). Minke whales and gray seals have shown slight displacement in response to construction-related vessel traffic (Anderwald *et al.* 2013).

Many odontocetes show considerable tolerance of vessel traffic, although they sometimes react at long distances if confined by ice or shallow water, if previously harassed by vessels, or have had little or no recent exposure to ships (Richardson *et al.* 1995). Dolphins of many species tolerate and sometimes approach vessels (*e.g.,* Anderwald *et al.* 2013). Some dolphin species approach moving vessels to ride the bow or stern waves (Williams *et al.* 1992). Pirotta *et al.* (2015) noted that the physical presence of vessels, not just ship noise, disturbed the foraging activity of bottlenose dolphins. Sightings of striped dolphin, Risso's dolphin, sperm whale, and Cuvier's beaked whale in the western Mediterranean were negatively correlated with the number of vessels in the area (Campana *et al.* 2015).

There are few data on the behavioral reactions of beaked whales to vessel noise, though they seem to avoid approaching vessels (*e.g.,* Würsig *et al.* 1998) or dive for an extended period when approached by a vessel (*e.g.,* Kasuya 1986). Based on a single observation, Aguilar Soto *et al.* (2006) suggest foraging efficiency of Cuvier's beaked whales may be reduced by close approach of vessels.

In summary, project vessel sounds would not be at levels expected to cause anything more than possible localized and temporary behavioral changes in marine mammals, and would not be expected to result in significant negative effects on individuals or at the population level. In addition, in all oceans of the world, large vessel traffic is currently so prevalent that it is commonly considered a usual source of ambient sound (NSF–USGS 2011).

Ship Strike

Vessel collisions with marine mammals, or ship strikes, can result in death or serious injury of the animal. Wounds resulting from ship strike may include massive trauma, hemorrhaging, broken bones, or propeller lacerations (Knowlton and Kraus, 2001). An animal at the surface may be struck directly by a vessel, a surfacing animal may hit the bottom of a vessel, or an animal just below the surface may be cut by a vessel's propeller. Superficial strikes may not kill or result in the death of the animal. These interactions are typically associated with large whales (*e.g.,* fin whales), which are occasionally found draped across the bulbous bow of large commercial ships upon arrival in port. Although smaller cetaceans are more

maneuverable in relation to large vessels than are large whales, they may also be susceptible to strike. The severity of injuries typically depends on the size and speed of the vessel, with the probability of death or serious injury increasing as vessel speed increases (Knowlton and Kraus, 2001; Laist *et al.,* 2001; Vanderlaan and Taggart, 2007; Conn and Silber, 2013). Impact forces increase with speed, as does the probability of a strike at a given distance (Silber *et al.,* 2010; Gende *et al.,* 2011).

Pace and Silber (2005) also found that the probability of death or serious injury increased rapidly with increasing vessel speed. Specifically, the predicted probability of serious injury or death increased from 45 to 75 percent as vessel speed increased from 10 to 14 kn, and exceeded 90 percent at 17 kn. Higher speeds during collisions result in greater force of impact, but higher speeds also appear to increase the chance of severe injuries or death through increased likelihood of collision by pulling whales toward the vessel (Clyne, 1999; Knowlton *et al.,* 1995). In a separate study, Vanderlaan and Taggart (2007) analyzed the probability of lethal mortality of large whales at a given speed, showing that the greatest rate of change in the probability of a lethal injury to a large whale as a function of vessel speed occurs between 8.6 and 15 kn. The chances of a lethal injury decline from approximately 80 percent at 15 kn to approximately 20 percent at 8.6 kn. At speeds below 11.8 kn, the chances of lethal injury drop below 50 percent, while the probability asymptotically increases toward one hundred percent above 15 kn.

The *Thompson* travels at a speed of either 5 (9.3 km/hour) or 8 kn (14.8 km/hour) while towing seismic survey gear (LGL 2019). At these speeds, both the possibility of striking a marine mammal and the possibility of a strike resulting in serious injury or mortality are discountable. At average transit speed, the probability of serious injury or mortality resulting from a strike is less than 50 percent. However, the likelihood of a strike actually happening is again discountable. Ship strikes, as analyzed in the studies cited above, generally involve commercial shipping, which is much more common in both space and time than is geophysical survey activity. Jensen and Silber (2004) summarized ship strikes of large whales worldwide from 1975–2003 and found that most collisions occurred in the open ocean and involved large vessels (*e.g.,* commercial shipping). No such incidents were reported for geophysical survey vessels during that time period.

It is possible for ship strikes to occur while traveling at slow speeds. For example, a hydrographic survey vessel traveling at low speed (5.5 kn) while conducting mapping surveys off the central California coast struck and killed a blue whale in 2009. The State of California determined that the whale had suddenly and unexpectedly surfaced beneath the hull, with the result that the propeller severed the whale's vertebrae, and that this was an unavoidable event. This strike represents the only such incident in approximately 540,000 hours of similar coastal mapping activity ($p = 1.9 \times 10^{-6}$; 95 percent CI = $0–5.5 \times 10^{-6}$; NMFS, 2013b). In addition, a research vessel reported a fatal strike in 2011 of a dolphin in the Atlantic, demonstrating that it is possible for strikes involving smaller cetaceans to occur. In that case, the incident report indicated that an animal apparently was struck by the vessel's propeller as it was intentionally swimming near the vessel. While indicative of the type of unusual events that cannot be ruled out, neither of these instances represents a circumstance that would be considered reasonably foreseeable or that would be considered preventable.

Although the likelihood of the vessel striking a marine mammal is low, we require a robust ship strike avoidance protocol (see *Proposed Mitigation*), which we believe eliminates any foreseeable risk of ship strike. We anticipate that vessel collisions involving a seismic data acquisition vessel towing gear, while not impossible, represent unlikely, unpredictable events for which there are no preventive measures. Given the required mitigation measures, the relatively slow speed of the vessel towing gear, the presence of bridge crew watching for obstacles at all times (including marine mammals), and the presence of marine mammal observers, we believe that the possibility of ship strike is discountable and, further, that were a strike of a large whale to occur, it would be unlikely to result in serious injury or mortality. No incidental take resulting from ship strike is anticipated, and this potential effect of the specified activity will not be discussed further in the following analysis.

Stranding—When a living or dead marine mammal swims or floats onto shore and becomes ''beached'' or incapable of returning to sea, the event is a ''stranding'' (Geraci *et al.,* 1999; Perrin and Geraci, 2002; Geraci and Lounsbury, 2005; NMFS, 2007). The legal definition for a stranding under the MMPA is that (A) a marine mammal is dead and is (i) on a beach or shore of the United States; or (ii) in waters under the jurisdiction of the United States (including any navigable waters); or (B) a marine mammal is alive and is (i) on a beach or shore of the United States and is unable to return to the water; (ii) on a beach or shore of the United States and, although able to return to the water, is in need of apparent medical attention; or (iii) in the waters under the jurisdiction of the United States (including any navigable waters), but is unable to return to its natural habitat under its own power or without assistance.

Marine mammals strand for a variety of reasons, such as infectious agents, biotoxicosis, starvation, fishery interaction, ship strike, unusual oceanographic or weather events, sound exposure, or combinations of these stressors sustained concurrently or in series. However, the cause or causes of most strandings are unknown (Geraci *et al.,* 1976; Eaton, 1979; Odell *et al.,* 1980; Best, 1982). Numerous studies suggest that the physiology, behavior, habitat relationships, age, or condition of cetaceans may cause them to strand or might pre-dispose them to strand when exposed to another phenomenon. These suggestions are consistent with the conclusions of numerous other studies that have demonstrated that combinations of dissimilar stressors commonly combine to kill an animal or dramatically reduce its fitness, even though one exposure without the other does not produce the same result (Chroussos, 2000; Creel, 2005; DeVries *et al.,* 2003; Fair and Becker, 2000; Foley *et al.,* 2001; Moberg, 2000; Relyea, 2005a; 2005b, Romero, 2004; Sih *et al.,* 2004).

Use of military tactical sonar has been implicated in some investigated stranding events. Most known stranding events have involved beaked whales, though a small number have involved deep-diving delphinids or sperm whales (*e.g.,* Mazzariol *et al.,* 2010; Southall *et al.,* 2013). In general, long duration (~1 second) and high-intensity sounds (>235 dB SPL) have been implicated in stranding events (Hildebrand, 2004). With regard to beaked whales, mid-frequency sound is typically implicated (when causation can be determined) (Hildebrand, 2004). Although seismic airguns create predominantly low-frequency energy, the signal does include a mid-frequency component. We have considered the potential for the proposed surveys to result in marine mammal stranding and have concluded that, based on the best available information, stranding is not expected to occur.

Effects to Prey—Marine mammal prey varies by species, season, and location and, for some, is not well documented. Fish react to sounds which are especially strong and/or intermittent low-frequency sounds. Short duration, sharp sounds can cause overt or subtle changes in fish behavior and local distribution. Hastings and Popper (2005) identified several studies that suggest fish may relocate to avoid certain areas of sound energy. Additional studies have documented effects of pulsed sound on fish, although several are based on studies in support of construction projects (*e.g.,* Scholik and Yan, 2001, 2002; Popper and Hastings, 2009). Sound pulses at received levels of 160 dB may cause subtle changes in fish behavior. SPLs of 180 dB may cause noticeable changes in behavior (Pearson *et al.,* 1992; Skalski *et al.,* 1992). SPLs of sufficient strength have been known to cause injury to fish and fish mortality. The most likely impact to fish from survey activities at the project area would be temporary avoidance of the area. The duration of fish avoidance of a given area after survey effort stops is unknown, but a rapid return to normal recruitment, distribution and behavior is anticipated.

Information on seismic airgun impacts to zooplankton, which represent an important prey type for mysticetes, is limited. McCauley *et al.* (2017) reported that experimental exposure to a pulse from a 150 $inch^3$ airgun decreased zooplankton abundance when compared with controls, as measured by sonar and net tows, and caused a two- to threefold increase in dead adult and larval zooplankton. Although no adult krill were present, the study found that all larval krill were killed after air gun passage. Impacts were observed out to the maximum 1.2 km range sampled.

A modeling exercise was conducted as a follow-up to the McCauley *et al.* (2017) study (as recommended by McCauley *et al.*), in order to assess the potential for impacts on ocean ecosystem dynamics and zooplankton population dynamics (Richardson *et al.,* 2017). Richardson *et al.* (2017) found that for copepods with a short life cycle in a high-energy environment, a full-scale airgun survey would impact copepod abundance up to three days following the end of the survey, suggesting that effects such as those found by McCauley *et al.* (2017) would not be expected to be detectable downstream of the survey areas, either spatially or temporally.

Notably, a recently described study produced results inconsistent with those of McCauley *et al.* (2017). Researchers conducted a field and laboratory study to assess if exposure to airgun noise affects mortality, predator escape response, or gene expression of the copepod *Calanus finmarchicus* (Fields *et al.,* 2019). Immediate mortality of copepods was significantly higher, relative to controls, at distances of 5 m or less from the airguns. Mortality one week after the airgun blast was significantly higher in the copepods placed 10 m from the airgun but was not significantly different from the controls at a distance of 20 m from the airgun. The increase in mortality, relative to controls, did not exceed 30 percent at any distance from the airgun. Moreover, the authors caution that even this higher mortality in the immediate vicinity of the airguns may be more pronounced than what would be observed in free-swimming animals due to increased flow speed of fluid inside bags containing the experimental animals. There were no sublethal effects on the escape performance or the sensory threshold needed to initiate an escape response at any of the distances from the airgun that were tested. Whereas McCauley *et al.* (2017) reported an SEL of 156 dB at a range of 509–658 m, with zooplankton mortality observed at that range, Fields *et al.* (2019) reported an SEL of 186 dB at a range of 25 m, with no reported mortality at that distance.

Regardless, if we assume a worst-case likelihood of severe impacts to zooplankton within approximately 1 km of the acoustic source, the typically wide dispersal of survey vessels and brief time to regeneration of the potentially affected zooplankton populations does not lead us to expect any meaningful follow-on effects to the prey base for odontocete predators. Given the inconsistency of the McCauley *et al.* (2017) results with prior research on impacts to zooplankton as a result of exposure to airgun noise and with the research of Fields *et al.* (2019), further validation of those findings would be necessary to assume that these impacts are likely to occur. Moreover, a single study is not sufficient to evaluate the potential impacts, and further study in additional locations must be conducted.

In general, impacts to marine mammal prey are expected to be limited due to the relatively small temporal and spatial overlap between the proposed survey and any areas used by marine mammal prey species. The proposed use of airguns as part of an active seismic array survey would occur over a relatively short time period (~28 days) and would occur over a very small area relative to the area available as marine mammal habitat in the Southwest Atlantic Ocean. We believe any impacts to marine mammals due to adverse effects to their prey would be insignificant due to the limited spatial and temporal impact of the proposed survey. However, adverse impacts may occur to a few species of fish and to zooplankton.

Acoustic Habitat—Acoustic habitat is the soundscape—which encompasses all of the sound present in a particular location and time, as a whole—when considered from the perspective of the animals experiencing it. Animals produce sound for, or listen for sounds produced by, conspecifics (communication during feeding, mating, and other social activities), other animals (finding prey or avoiding predators), and the physical environment (finding suitable habitats, navigating). Together, sounds made by animals and the geophysical environment (*e.g.,* produced by earthquakes, lightning, wind, rain, waves) make up the natural contributions to the total acoustics of a place. These acoustic conditions, termed acoustic habitat, are one attribute of an animal's total habitat.

Soundscapes are also defined by, and acoustic habitat influenced by, the total contribution of anthropogenic sound. This may include incidental emissions from sources such as vessel traffic, or may be intentionally introduced to the marine environment for data acquisition purposes (as in the use of airgun arrays). Anthropogenic noise varies widely in its frequency content, duration, and loudness and these characteristics greatly influence the potential habitat-mediated effects to marine mammals (please see also the previous discussion on masking in the *Acoustic Effects* section), which may range from local effects for brief periods of time to chronic effects over large areas and for long durations. Depending on the extent of effects to habitat, animals may alter their communications signals (thereby potentially expending additional energy) or miss acoustic cues (either conspecific or adventitious). For more detail on these concepts see, *e.g.,* Barber *et al.,* 2010; Pijanowski *et al.,* 2011; Francis and Barber, 2013; Lillis *et al.,* 2014.

Problems arising from a failure to detect cues are more likely to occur when noise stimuli are chronic and overlap with biologically relevant cues used for communication, orientation, and predator/prey detection (Francis and Barber, 2013). Although the signals emitted by seismic airgun arrays are generally low frequency, they would also likely be of short duration and transient in any given area due to the nature of these surveys. As described

previously, exploratory surveys such as this one cover a large area but would be transient rather than focused in a given location over time and therefore would not be considered chronic in any given location.

In summary, activities associated with the proposed action are not likely to have a permanent, adverse effect on any fish habitat or populations of fish species or on the quality of acoustic habitat. Thus, any impacts to marine mammal habitat are not expected to cause significant or long-term consequences for individual marine mammals or their populations.

Estimated Take

This section provides an estimate of the number of incidental takes proposed for authorization through this IHA, which will inform both NMFS' consideration of ''small numbers'' and the negligible impact determination.

Harassment is the only type of take expected to result from these activities. Except with respect to certain activities not pertinent here, section 3(18) of the MMPA defines ''harassment'' as any act of pursuit, torment, or annoyance, which (i) has the potential to injure a marine mammal or marine mammal stock in the wild (Level A harassment); or (ii) has the potential to disturb a marine mammal or marine mammal stock in the wild by causing disruption of behavioral patterns, including, but not limited to, migration, breathing, nursing, breeding, feeding, or sheltering (Level B harassment).

Authorized takes would be by Level B harassment only, as use of the acoustic sources (*i.e.,* seismic airgun) has the potential to result in disruption of behavioral patterns for individual marine mammals. Based on the nature of the activity and the anticipated effectiveness of the mitigation measures (*i.e.,* marine mammal exclusion zones) discussed in detail below in Proposed Mitigation section, Level A harassment is neither anticipated nor proposed to be authorized. As described previously, no mortality is anticipated or proposed to be authorized for this activity. Below we describe how the take is estimated.

Generally speaking, we estimate take by considering: (1) Acoustic thresholds above which NMFS believes the best available science indicates marine mammals will be behaviorally harassed or incur some degree of permanent hearing impairment; (2) the area or volume of water that will be ensonified above these levels in a day; (3) the density or occurrence of marine mammals within these ensonified areas; and, (4) and the number of days of activities. We note that while these basic factors can contribute to a basic calculation to provide an initial prediction of takes, additional information that can qualitatively inform take estimates is also sometimes available (*e.g.,* previous monitoring results or average group size). Below, we describe the factors considered here in more detail and present the proposed take estimate.

Acoustic Thresholds

Using the best available science, NMFS has developed acoustic thresholds that identify the received level of underwater sound above which exposed marine mammals would be reasonably expected to be behaviorally harassed (equated to Level B harassment) or to incur PTS of some degree (equated to Level A harassment).

Level B Harassment for non-explosive sources—Though significantly driven by received level, the onset of behavioral disturbance from anthropogenic noise exposure is also informed to varying degrees by other factors related to the source (*e.g.,* frequency, predictability, duty cycle), the environment (*e.g.,* bathymetry), and the receiving animals (hearing, motivation, experience, demography, behavioral context) and can be difficult to predict (Southall *et al.,* 2007, Ellison *et al.,* 2012). Based on what the available science indicates, and the practical need to use a threshold based on a factor that is both predictable and measurable for most activities, NMFS uses a generalized acoustic threshold based on received level to estimate the onset of behavioral harassment. NMFS predicts that marine mammals are likely to be behaviorally harassed in a manner we consider Level B harassment when exposed to underwater anthropogenic noise above received levels of 120 dB re 1 μPa (rms) for continuous (*e.g.,* vibratory pile-driving, drilling) and above 160 dB re 1 μPa (rms) for non-explosive impulsive (*e.g.,* seismic airguns) or intermittent (*e.g.,* scientific sonar) sources.

SIO's proposed activity includes the use of impulsive seismic sources, and therefore the 160 dB re 1 μPa (rms) is applicable.

Level A harassment for non-explosive sources—NMFS' *Technical Guidance for Assessing the Effects of Anthropogenic Sound on Marine Mammal Hearing* (Version 2.0) (NMFS, 2018) identifies dual criteria to assess auditory injury (Level A harassment) to five different marine mammal groups (based on hearing sensitivity) as a result of exposure to noise from two different types of sources (impulsive or non-impulsive). SIO's proposed activity includes the use of impulsive seismic sources.

These thresholds are provided in the table below. The references, analysis, and methodology used in the development of the thresholds are described in NMFS 2018 Technical Guidance, which may be accessed at *https://www.fisheries.noaa.gov/national/marine-mammal-protection/marine-mammal-acoustic-technical-guidance.*

BILLING CODE 3510–22–P

Table 4. Thresholds identifying the onset of Permanent Threshold Shift.

	PTS Onset Acoustic Thresholds* (Received Level)	
Hearing Group	**Impulsive**	**Non-impulsive**
Low-Frequency (LF) Cetaceans	*Cell 1* $L_{pk,flat}$: 219 dB $L_{E,LF,24h}$: 183 dB	*Cell 2* $L_{E,LF,24h}$: 199 dB
Mid-Frequency (MF) Cetaceans	*Cell 3* $L_{pk,flat}$: 230 dB $L_{E,MF,24h}$: 185 dB	*Cell 4* $L_{E,MF,24h}$: 198 dB
High-Frequency (HF) Cetaceans	*Cell 5* $L_{pk,flat}$: 202 dB $L_{E,HF,24h}$: 155 dB	*Cell 6* $L_{E,HF,24h}$: 173 dB
Phocid Pinnipeds (PW) (Underwater)	*Cell 7* $L_{pk,flat}$: 218 dB $L_{E,PW,24h}$: 185 dB	*Cell 8* $L_{E,PW,24h}$: 201 dB
Otariid Pinnipeds (OW) (Underwater)	*Cell 9* $L_{pk,flat}$: 232 dB $L_{E,OW,24h}$: 203 dB	*Cell 10* $L_{E,OW,24h}$: 219 dB

* Dual metric acoustic thresholds for impulsive sounds: Use whichever results in the largest isopleth for calculating PTS onset. If a non-impulsive sound has the potential of exceeding the peak sound pressure level thresholds associated with impulsive sounds, these thresholds should also be considered.

Note: Peak sound pressure (L_{pk}) has a reference value of 1 μPa, and cumulative sound exposure level (L_E) has a reference value of 1μPa^{2}s. In this Table, thresholds are abbreviated to reflect American National Standards Institute standards (ANSI 2013). However, peak sound pressure is defined by ANSI as incorporating frequency weighting, which is not the intent for this Technical Guidance. Hence, the subscript "flat" is being included to indicate peak sound pressure should be flat weighted or unweighted within the generalized hearing range. The subscript associated with cumulative sound exposure level thresholds indicates the designated marine mammal auditory weighting function (LF, MF, and HF cetaceans, and PW and OW pinnipeds) and that the recommended accumulation period is 24 hours. The cumulative sound exposure level thresholds could be exceeded in a multitude of ways (*i.e.*, varying exposure levels and durations, duty cycle). When possible, it is valuable for action proponents to indicate the conditions under which these acoustic thresholds will be exceeded.

BILLING CODE 3510–22–C

Ensonified Area

Here, we describe operational and environmental parameters of the activity that will feed into identifying the area ensonified above the acoustic thresholds, which include source levels and transmission loss coefficient.

The proposed survey would entail the use of a 2-airgun array with a total discharge of 90 in^3 at a two depth of 2–4 m. Lamont-Doherty Earth Observatory (L–DEO) model results are used to determine the 160 dB$_{rms}$ radius for the 2-airgun array in deep water (> 1,000 m) down to a maximum water depth of 2,000 m. Received sound levels were predicted by L-DEO's model (Diebold *et al.,* 2010) as a function of distance from the airguns, for the two 45 in^3 airguns. This modeling approach uses ray tracing for the direct wave traveling from the array to the receiver and its associated source ghost (reflection at the air-water interface in the vicinity of the array), in a constant-velocity half-space (infinite homogenous ocean layer, unbounded by a seafloor). In addition, propagation measurements of pulses from a 36-airgun array at a tow depth of 6 m have been reported in deep water (~1,600 m), intermediate water depth on the slope (~600–1,100 m), and shallow water (~50 m) in the Gulf of Mexico in 2007–2008 (Tolstoy *et al.,* 2009; Diebold *et al.,* 2010).

For deep and intermediate water cases, the field measurements cannot be used readily to derive the Level A and Level B harassment isopleths, as at those sites the calibration hydrophone was located at a roughly constant depth of 350–550 m, which may not intersect all the SPL isopleths at their widest point from the sea surface down to the maximum relevant water depth (~2,000 m) for marine mammals. At short ranges, where the direct arrivals dominate and the effects of seafloor interactions are minimal, the data at the deep sites are suitable for comparison with modeled levels at the depth of the calibration hydrophone. At longer ranges, the comparison with the model—constructed from the maximum SPL through the entire water column at varying distances from the airgun array—is the most relevant.

In deep and intermediate water depths, comparisons at short ranges between sound levels for direct arrivals recorded by the calibration hydrophone and model results for the same array tow depth are in good agreement (see Figures 12 and 14 in Appendix H of NSF–USGS 2011). Consequently, isopleths falling within this domain can be predicted reliably by the L–DEO model, although they may be imperfectly sampled by measurements recorded at a single depth. At greater distances, the calibration data show that seafloor-reflected and sub-seafloor-refracted arrivals dominate, whereas the direct arrivals become weak and/or incoherent. Aside from local topography effects, the region around the critical distance is where the observed levels rise closest to the model curve. However, the observed sound levels are found to fall almost entirely below the model curve. Thus, analysis of the Gulf of Mexico calibration measurements demonstrates that although simple, the L–DEO model is a robust tool for conservatively estimating isopleths.

The proposed surveys would acquire data with two 45-in^3 guns at a tow depth of 2–4 m. For deep water (>1,000 m), we use the deep-water radii obtained from L–DEO model results down to a maximum water depth of 2,000 m for the airgun array with 2-m and 8-m airgun separation. The radii for intermediate water depths (100–1,000 m) are derived from the deep-water ones by applying a correction factor (multiplication) of 1.5, such that observed levels at very near offsets fall below the corrected mitigation curve (see Figure 16 in Appendix H of NSF–USGS 2011).

L–DEO's modeling methodology is described in greater detail in SIO's IHA application. The estimated distances to the Level B harassment isopleths for the two proposed airgun configurations in each water depth category are shown in Table 5.

TABLE 5—PREDICTED RADIAL DISTANCES FROM R/V *Thompson* SEISMIC SOURCE TO ISOPLETHS CORRESPONDING TO LEVEL B HARASSMENT THRESHOLD

Airgun configuration	Water depth (m)	Predicted distances (m) to 160 dB received sound level
Two 45 in^3 guns, 2-m separation	>1,000 (deep)	[a] 539
	100–1,000 (intermediate)	[b] 809
Two 45 in^3 guns, 8-m separation	>1,000 (deep)	[a] 578
	100–1,000 (intermediate)	[b] 867

[a] Distance based on L–DEO model results.
[b] Distance based on L–DEO model results with a 1.5 x correction factor between deep and intermediate water depths.
[c] Distance based on empirically derived measurements in the Gulf of Mexico with scaling applied to account for differences in tow depth.

Predicted distances to Level A harassment isopleths, which vary based on marine mammal hearing groups, were calculated based on modeling performed by L–DEO using the NUCLEUS software program and the NMFS User Spreadsheet, described below. The updated acoustic thresholds for impulsive sounds (*e.g.,* airguns) contained in the Technical Guidance were presented as dual metric acoustic thresholds using both SEL_{cum} and peak sound pressure metrics (NMFS 2018). As dual metrics, NMFS considers onset of PTS (Level A harassment) to have occurred when either one of the two metrics is exceeded (*i.e.,* metric resulting in the largest isopleth). The SEL_{cum} metric considers both level and duration of exposure, as well as auditory weighting functions by marine mammal hearing group. In recognition of the fact that the requirement to calculate Level A harassment ensonified areas could be more technically challenging to predict due to the duration component and the use of weighting functions in the new SEL_{cum} thresholds, NMFS developed an optional User Spreadsheet that includes tools to help predict a simple isopleth that can be used in conjunction with marine mammal density or occurrence to facilitate the estimation of take numbers.

The SEL_{cum} for the 2–GI airgun array is derived from calculating the modified farfield signature. The farfield signature is often used as a theoretical representation of the source level. To compute the farfield signature, the source level is estimated at a large distance (right) below the array (*e.g.,* 9 km), and this level is back projected mathematically to a notional distance of 1 m from the array's geometrical center. However, it has been recognized that the source level from the theoretical farfield signature is never physically achieved at the source when the source is an array of multiple airguns separated in space (Tolstoy *et al.,* 2009). Near the source (at short ranges, distances <1 km), the pulses of sound pressure from each individual airgun in the source array do not stack constructively as they do for the theoretical farfield signature. The pulses from the different airguns spread out in time such that the source levels observed or modeled are the result of the summation of pulses from a few airguns, not the full array (Tolstoy *et al.,* 2009). At larger distances, away from the source array center, sound pressure of all the airguns in the array stack coherently, but not within one time sample, resulting in smaller source levels (a few dB) than the source level derived from the farfield signature. Because the farfield signature does not take into account the interactions of the two airguns that occur near the source center and is calculated as a point source (single airgun), the modified farfield signature is a more appropriate measure of the sound source level for large arrays. For this smaller array, the modified farfield changes will be correspondingly smaller as well, but we use this method for consistency across all array sizes.

SIO used the same acoustic modeling as Level B harassment with a small grid step in both the inline and depth directions to estimate the SEL_{cum} and peak SPL. The propagation modeling takes into account all airgun interactions at short distances from the source including interactions between subarrays using the NUCLEUS software to estimate the notional signature and the MATLAB software to calculate the pressure signal at each mesh point of a grid. For a more complete explanation of this modeling approach, please see *Appendix A: Determination of Mitigation Zones* in SIO's IHA application.

BILLING CODE 3510–22–P

Table 6. Modeled Source Levels (dB) for R/V *Thompson* 90 in^3 Airgun Arrays.

Functional Hearing Group	8-kn survey with 8-m airgun separation: Peak SPL_{flat}	8-kn survey with 8-m airgun separation: SEL_{cum}	5-kn survey with 2-m airgun separation: Peak SPL_{flat}	5-kn survey with 2-m airgun separation: SEL_{cum}
Low frequency cetaceans ($L_{pk,flat}$: 219 dB; $L_{E,LF,24h}$: 183 dB)	228.8	207	232.8	206.7
Mid frequency cetaceans ($L_{pk,flat}$: 230 dB; $L_{E,MF,24h}$: 185 dB)	N/A[1]	206.7	229.8	206.9
High frequency cetaceans ($L_{pk,flat}$: 202 dB; $L_{E,HF,24h}$: 155 dB)	233	207.6	232.9	207.2
Phocid Pinnipeds (Underwater) ($L_{pk,flat}$: 218 dB; $L_{E,HF,24h}$: 185 dB)	230	206.7	232.8	206.9
Otariid Pinnipeds (Underwater) ($L_{pk,flat}$: 232 dB; $L_{E,HF,24h}$: 203 dB)	N/A[1]	203	225.6	207.4

[1] N/A indicates source level not applicable or not available. There are no values for the 2 x 45 cu.in at 4m depth with an 8m separation for the MF cetaceans and Otariids (maximum peak value is 221dB so less than 230 or 232dB). Therefore, we cannot provide any radial distance or modified peak farfield values for these two hearing groups.

In order to more realistically incorporate the Technical Guidance's weighting functions over the seismic array's full acoustic band, unweighted spectrum data for the *Thompson's* airgun array (modeled in 1 Hz bands) was used to make adjustments (dB) to the unweighted spectrum levels, by frequency, according to the weighting functions for each relevant marine mammal hearing group. These adjusted/weighted spectrum levels were then converted to pressures (μPa) in order to integrate them over the entire broadband spectrum, resulting in broadband weighted source levels by hearing group that could be directly incorporated within the User Spreadsheet (*i.e.,* to override the Spreadsheet's more simple weighting factor adjustment). Using the User Spreadsheet's ''safe distance'' methodology for mobile sources (described by Sivle *et al.,* 2014) with the hearing group-specific weighted source levels, and inputs assuming spherical spreading propagation and source velocities and shot intervals provided in SIO's IHA application, potential radial distances to auditory injury zones were calculated for SEL_{cum} thresholds, for both array configurations.

Inputs to the User Spreadsheet in the form of estimated SLs are shown in Table 6. User Spreadsheets used by SIO to estimate distances to Level A harassment isopleths for the two potential airgun array configurations are shown in Tables A–4 and A–5 in *Appendix A* of SIO's IHA application. Outputs from the User Spreadsheet in the form of estimated distances to Level A harassment isopleths are shown in Table 7. As described above, NMFS considers onset of PTS (Level A harassment) to have occurred when either one of the dual metrics (SEL_{cum} or Peak SPL_{flat}) is exceeded (*i.e.,* metric resulting in the largest isopleth).

Table 7. Modeled Radial Distances to Isopleths Corresponding to Level A Harassment Thresholds.

Functional Hearing Group (Level A harassment thresholds)	8-kn survey with 8-m airgun separation: Peak SPL_{flat}	8-kn survey with 8-m airgun separation: SEL_{cum}	5-kn survey with 2-m airgun separation: Peak SPL_{flat}	5-kn survey with 2-m airgun separation: SEL_{cum}
Low frequency cetaceans ($L_{pk,flat}$: 219 dB; $L_{E,LF,24h}$: 183 dB)	3.08	2.4	4.89	6.5
Mid frequency cetaceans ($L_{pk,flat}$: 230 dB; $L_{E,MF,24h}$: 185 dB)	0	0	0.98	0
High frequency cetaceans ($L_{pk,flat}$: 202 dB; $L_{E,HF,24h}$: 155 dB)	34.84	0	34.62	0
Phocid Pinnipeds (Underwater) ($L_{pk,flat}$: 218 dB; $L_{E,HF,24h}$: 185 dB)	4.02	0	5.51	0.1
Otariid Pinnipeds (Underwater) ($L_{pk,flat}$: 232 dB; $L_{E,HF,24h}$: 203 dB)	0	0	0.48	0

BILLING CODE 3510–22–C

Note that because of some of the assumptions included in the methods used, isopleths produced may be overestimates to some degree, which will ultimately result in some degree of overestimate of take by Level A harassment. However, these tools offer the best way to predict appropriate isopleths when more sophisticated 3D modeling methods are not available, and NMFS continues to develop ways to quantitatively refine these tools and will qualitatively address the output where appropriate. For mobile sources, such as the proposed seismic survey, the User Spreadsheet predicts the closest distance at which a stationary animal would not incur PTS if the sound source traveled by the animal in a straight line at a constant speed.

Marine Mammal Occurrence

In this section we provide the information about the presence, density, or group dynamics of marine mammals that will inform the take calculations.

SIO determined that the preferred source of density data for marine mammal species that might be encountered in the proposed survey areas in the South Atlantic Ocean was Di Tullio *et al.* (2016). The rationale for using these data was that these surveys were conducted offshore along the continental slope at the same latitudes as the proposed seismic surveys and so come from a similar season, water depth category, and climatic region in the southern Atlantic Ocean. When data for species expected to occur in the proposed seismic survey areas were not available in Di Tullio *et al.* (2016), data from White *et al.* (2002) was used as calculated in LGL/NSF (2019) because they came from an area which was slightly south of the proposed project area but well north of the AECOM/NSF (2014) study area. An exception was made for the southern right whale, for which densities from AECOM/NSF (2014) were higher and thus more conservative. Next data came from AECOM/NSF (2014); although they come from an area south of the proposed project area, they were the next best data available for those species. For species not included in these sources stated above, data came from from de Boer (2010), Garaffo *et al.* (2011), NOAA–SWFSC LOA (2013 in AECOM/NSF 2014), Wedekin *et al.* (2014), Bradford *et al.* (2017), and Mannocci *et al.* (2017). When densities were not directly available from the above studies, they were estimated using sightings and effort reported in those sources. Densities calculated from de Boer (2010) come from LGL/NSF (2016); densities from White *et al.* (2002), Garaffo *et al.* (2011), and Wedekin *et al.* (2014) are from LGL/NSF (2019). Data sources and density calculations are described in detail in Appendix B of SIO's IHA application. For some species, the densities derived from past surveys may not be representative of the densities that would be encountered during the proposed seismic surveys. However, the approach used is based on the best

available data. Estimated densities used to inform take estimates are presented in Table 8.

TABLE 8—MARINE MAMMAL DENSITIES IN THE PROPOSED SURVEY AREA

Species	Estimated density (#/km²) [a]
LF Cetaceans	
Southern right whale	*0.007965*
Pygmy right whale	N.A.
Blue whale	*0.000051*
Fin whale	*0.000356*
Sei whale	*0.000086*
Bryde's whale	0.000439
Common (dwarf) minke whale	0.077896
Antarctic minke whale	0.077896
Humpback whale	0.000310
MF Cetaceans	
Sperm whale	*0.005975*
Arnoux's beaked whale	0.011379
Cuvier's beaked whale	0.000548
Southern bottlenose whale	0.007906
Shepherd's beaked whale	0.009269
Blainville's beaked whale	0.000053
Gray's beaked whale	0.001885
Hector's beaked whale	0.000212
Gervais' beaked whale	0.001323
True's beaked whale	0.000053
Strap-toothed beaked whale	0.000582
Andrew's beaked whale	0.000159
Spade-toothed beaked whale	0.000053
Risso's dolphin	0.010657
Rough-toothed dolphin	0.005954
Common bottlenose dolphin	0.040308
Pantropical spotted dolphin	0.003767
Atlantic spotted dolphin	0.213721
Spinner dolphin	0.040720
Clymene dolphin	0.006800
Striped dolphin	0.004089
Short-beaked common dolphin	0.717166
Fraser's dolphin	0.021040
Dusky dolphin	0.012867
Southern right whale dolphin	0.006827
Killer whale	0.000266
Short-finned pilot whale	0.002085
Long-finned pilot whale	0.021379
False killer whale	0.000882
Pygmy killer whale	0.000321
Melon-headed whale	0.003540
HF Cetaceans	
Pygmy sperm whale	0.003418
Dwarf sperm whale	0.002582
Hourglass dolphin	0.011122
Otariids	
Subantarctic fur seal	0.00274
Cape fur seal	N.A.
Phocids	
Crabeater seal	0.00649
Leopard seal	0.00162
Southern elephant seal	0.00155

N.A. indicates density estimate is not available.

Species in italics are listed under the ESA as endangered.

[a] See Appendix B in SIO's IHA application for density sources.

Take Calculation and Estimation

Here we describe how the information provided above is brought together to produce a quantitative take estimate. In order to estimate the number of marine mammals predicted to be exposed to sound levels that would result in Level A harassment or Level B harassment, radial distances from the airgun array to predicted isopleths corresponding to the Level A harassment and Level B harassment thresholds are calculated, as described above. Those radial distances are then used to calculate the area(s) around the airgun array predicted to be ensonified to sound levels that exceed the Level A harassment and Level B harassment thresholds. The area estimated to be ensonified in a single day of the survey is then calculated (Table 9), based on the areas predicted to be ensonified around the array and the estimated trackline distance traveled per day. This number is then multiplied by the number of survey days. The product is then multiplied by 1.25 to account for the additional 25 percent contingency. This results in an estimate of the total area (km²) expected to be ensonified to the Level A and Level B harassment thresholds for each survey type (Table 9).

TABLE 9—AREAS (KM²) TO BE ENSONIFIED TO LEVEL A AND LEVEL B HARASSMENT THRESHOLDS

Survey type	Criteria	Relevant isopleth (m)	Daily ensonified area (km²)	Total survey days	25 percent increase	Total ensonified area (km²)
5-kn survey	Level B Harassment (160 dB)					
	Intermediate water	809	14.67	10	1.25	183.34
	Deep water	539	231.31	10	1.25	2891.42
	Level A Harassment					
	LF cetacean	6.5	2.89	10	1.25	36.125
	MF cetacean	1	0.44	10	1.25	5.55
	HF cetacean	34.6	15.37	10	1.25	192.13
	Phocids	5.5	2.44	10	1.25	30.53
	Otariids	0.5	0.22	10	1.25	2.77
8-kn survey	Level B Harassment (160 dB)					
	Intermediate water	867	25.95	4	1.25	129.75
	Deep water	578	395.88	4	1.25	1979.38
	Level A Harassment					
	LF cetacean	3.1	2.21	4	1.25	11.04
	MF cetacean	0	0	4	1.25	0
	HF cetacean	34.8	24.78	4	1.25	124
	Phocids	4	2.85	4	1.25	14.24
	Otariids	0	0	4	1.25	0

The total ensonified areas (km²) for each criteria presented in Table 9 were summed to determine the total ensonified area for all survey activities (Table 10).

TABLE 10—TOTAL ENSONIFIED AREAS (km^2) FOR ALL SURVEYS

Criteria	Total ensonified area (km^2) for all surveys
160 dB Level B (all depths)	5183.89
160 dB Level B (intermediate water)	313.09
160 dB Level B (deep water)	4870.80
LF cetacean Level A	47.11
MF cetacean Level A	5.55
HF cetacean Level A	316.04
Phocids Level A	44.77
Otariids Level A	2.77

The marine mammals predicted to occur within these respective areas, based on estimated densities (Table 8), are assumed to be incidentally taken. While some takes by Level A harassment have been estimated, based on the nature of the activity and in consideration of the proposed mitigation measures (see Proposed Mitigation section below), Level A take is not expected to occur and has not been proposed to be authorized. Estimated exposures for the proposed survey are shown in Table 11.

BILLING CODE 3510–22–P

Table 11. Calculated and Proposed Level A and Level B Exposures, and Percentage of Population Exposed.

Species	Calculated Take[1]		Proposed Take[4]	Percent of Population[5]
	Level B Harassment[2]	Level A Harassment[3]	Level B Harassment only	
LF Cetaceans				
Southern right whale	*41*	*0*	*41*	*1.3*
Pygmy right whale	N.A.	N.A.	2[5]	N.A.
Blue whale	*0*	*0*	*3*[6]	*<0.1*
Fin whale	*2*	*0*	*4*[6]	*<0.1*
Sei whale	*0*	*0*	*3*[6]	*<0.1*
Bryde's whale	2	0	20[5]	<0.1
Common (dwarf) minke whale	400	4	400	0.1
Antarctic minke whale	400	4	400	0.1
Humpback whale	2	0	20[5]	0
MF Cetaceans				
Sperm whale	*31*	*0*	*31*	*0.3*
Arnoux's beaked whale	59	0	59	<0.1
Cuvier's beaked whale	3	0	3	<0.1
Southern bottlenose whale	41	0	41	<0.1
Shepherd's beaked whale	48	0	48	N.A.
Blainville's beaked whale	0	0	7[6]	N.A.
Gray's beaked whale	10	0	10	<0.1
Hector's beaked whale	1	0	2[6]	N.A.
Gervais' beaked whale	7	0	7	N.A.
True's beaked whale	0	0	2[6]	N.A.
Strap-toothed beaked whale	3	0	3	<0.1
Andrew's beaked whale	1	0	2[6]	N.A.
Spade-toothed beaked whale	0	0	2[6]	N.A.
Risso's dolphin	55	0	78[6]	0.3
Rough-toothed dolphin	31	0	55[6]	N.A.
Common bottlenose dolphin	209	0	209	0.3
Pantropical spotted dolphin	20	0	104[6]	0.6
Atlantic spotted dolphin	1108	0	1108	2.5
Spinner dolphin	211	0	315[6]	N.A.
Clymene dolphin	35	0	35	N.A.
Striped dolphin	21	0	110[5]	<0.1
Short-beaked common dolphin	3714	4	3714	5.3
Fraser's dolphin	109	0	283[6]	N.A.
Dusky dolphin	67	0	67	0.9
Southern right whale dolphin	35	0	35	N.A.
Killer whale	1	0	5[6]	<0.1
Short-finned pilot whale	11	0	41[6]	<0.1
Long-finned pilot whale	111	0	111	0.1
False killer whale	5	0	19[6]	N.A.
Pygmy killer whale	2	0	26[6]	N.A.
Melon-headed whale	18	0	170[6]	N.A.

HF Cetaceans				
Pygmy sperm whale	17	1	17	N.A.
Dwarf sperm whale	12	1	12	N.A.
Hourglass dolphin	54	4	54	<0.1
Otariids				
Subantarctic fur seal	14	0	14	<0.1
Cape fur seal	N.A.	N.A.	20[7]	N.A.
Phocids				
Crabeater seal	34	0	34	<0.1
Leopard seal	8	0	8	<0.1
Southern elephant seal	8	0	8	<0.1

Species in italics are listed under the ESA as endangered. N.A. (-) is not available

[1] Take using NMFS daily method for calculating ensonified area: estimated density multiplied by the daily ensonified area to levels ≥160 dB re 1 μPa_{rms} on one selected day multiplied by the number of survey days, times 1.25 (see Appendix C); daily ensonified area = full 160-dB area minus ensonified area for the appropriate PTS threshold.

[2] Level B harassment takes, based on the 160-dB criterion, excluding exposures to sound levels equivalent to PTS thresholds.

[3] Level A harassment takes if there were no mitigation measures.

[4] Proposed take authorization is Level B harassment calculated takes, unless otherwise indicated.

[5] Proposed take authorization (Level B harassment only) increased to maximum group size from Jefferson *et al.* (2015).

[6] Proposed take authorization (Level B harassment only) increased to mean group size from Weir (2001), Bradford *et al.* (2017), or Di Tullio *et al.* (2016), whichever is larger.

[7] Proposoed take authorization (Level B harassment only) increased to 20 individuals, as no densities available.

BILLING CODE 3510–22–C

It should be noted that the proposed take numbers shown in Table 11 are expected to be conservative for several reasons. First, in the calculations of estimated take, 25 percent has been added in the form of operational survey days to account for the possibility of additional seismic operations associated with airgun testing and repeat coverage of any areas where initial data quality is sub-standard, and in recognition of the uncertainties in the density estimates used to estimate take as described above. Additionally, marine mammals would be expected to move away from a loud sound source that represents an aversive stimulus, such as an airgun array, potentially reducing the likelihood of takes by Level A harassment. However, the extent to which marine mammals would move away from the sound source is difficult to quantify and is, therefore, not accounted for in the take estimates.

Proposed Mitigation

In order to issue an IHA under Section 101(a)(5)(D) of the MMPA, NMFS must set forth the permissible methods of taking pursuant to such activity, and other means of effecting the least practicable impact on such species or stock and its habitat, paying particular attention to rookeries, mating grounds, and areas of similar significance, and on the availability of such species or stock for taking for certain subsistence uses (latter not applicable for this action). NMFS regulations require applicants for incidental take authorizations to include information about the availability and feasibility (economic and technological) of equipment, methods, and manner of conducting such activity or other means of effecting the least practicable adverse impact upon the affected species or stocks and their habitat (50 CFR 216.104(a)(11)).

In evaluating how mitigation may or may not be appropriate to ensure the least practicable adverse impact on species or stocks and their habitat, as well as subsistence uses where applicable, we carefully consider two primary factors:

(1) The manner in which, and the degree to which, the successful implementation of the measure(s) is expected to reduce impacts to marine mammals, marine mammal species or stocks, and their habitat This considers the nature of the potential adverse impact being mitigated (likelihood, scope, range). It further considers the likelihood that the measure will be effective if implemented (probability of accomplishing the mitigating result if implemented as planned), the likelihood of effective implementation (probability implemented as planned); and

(2) The practicability of the measures for applicant implementation, which may consider such things as cost, impact on operations, and, in the case of a military readiness activity, personnel safety, practicality of implementation, and impact on the effectiveness of the military readiness activity.

SIO has reviewed mitigation measures employed during seismic research surveys authorized by NMFS under previous incidental harassment authorizations, as well as recommended best practices in Richardson *et al.* (1995), Pierson *et al.* (1998), Weir and Dolman (2007), Nowacek *et al.* (2013), Wright (2014), and Wright and Cosentino (2015), and has incorporated a suite of proposed mitigation measures into their project description based on the above sources.

To reduce the potential for disturbance from acoustic stimuli associated with the activities, SIO has proposed to implement mitigation measures for marine mammals. Mitigation measures that would be adopted during the proposed surveys include (1) Vessel-based visual mitigation monitoring; (2) Establishment of a marine mammal exclusion zone (EZ) and buffer zone; (3) shutdown procedures; (4) ramp-up procedures;

and (4) vessel strike avoidance measures.

Vessel-Based Visual Mitigation Monitoring

Visual monitoring requires the use of trained observers (herein referred to as visual PSOs) to scan the ocean surface visually for the presence of marine mammals. PSO observations would take place during all daytime airgun operations and nighttime start ups (if applicable) of the airguns. If airguns are operating throughout the night, observations would begin 30 minutes prior to sunrise. If airguns are operating after sunset, observations would continue until 30 minutes following sunset. Following a shutdown for any reason, observations would occur for at least 30 minutes prior to the planned start of airgun operations. Observations would also occur for 30 minutes after airgun operations cease for any reason. Observations would also be made during daytime periods when the *Thompson* is underway without seismic operations, such as during transits, to allow for comparison of sighting rates and behavior with and without airgun operations and between acquisition periods. Airgun operations would be suspended when marine mammals are observed within, or about to enter, the designated EZ (as described below).

During seismic operations, three visual PSOs would be based aboard the *Thompson.* PSOs would be appointed by SIO with NMFS approval. One dedicated PSO would monitor the EZ during all daytime seismic operations. PSO(s) would be on duty in shifts of duration no longer than 4 hours. Other vessel crew would also be instructed to assist in detecting marine mammals and in implementing mitigation requirements (if practical). Before the start of the seismic survey, the crew would be given additional instruction in detecting marine mammals and implementing mitigation requirements.

The *Thompson* is a suitable platform from which PSOs would watch for marine mammals. Standard equipment for marine mammal observers would be 7 x 50 reticule binoculars and optical range finders. At night, night-vision equipment would be available. The observers would be in communication with ship's officers on the bridge and scientists in the vessel's operations laboratory, so they can advise promptly of the need for avoidance maneuvers or seismic source shutdown.

The PSOs must have no tasks other than to conduct observational effort, record observational data, and communicate with and instruct relevant vessel crew with regard to the presence of marine mammals and mitigation requirements. PSO resumes shall be provided to NMFS for approval. At least one PSO must have a minimum of 90 days at-sea experience working as PSOs during a seismic survey. One ''experienced'' visual PSO will be designated as the lead for the entire protected species observation team. The lead will serve as primary point of contact for the vessel operator.

Exclusion Zone and Buffer Zone

An EZ is a defined area within which occurrence of a marine mammal triggers mitigation action intended to reduce the potential for certain outcomes, *e.g.,* auditory injury, disruption of critical behaviors. The PSOs would establish a minimum EZ with a 100 m radius for the airgun array. The 100-m EZ would be based on radial distance from any element of the airgun array (rather than being based on the center of the array or around the vessel itself). With certain exceptions (described below), if a marine mammal appears within, enters, or appears on a course to enter this zone, the acoustic source would be shut down (see Shutdown Procedures below).

The 100-m radial distance of the standard EZ is precautionary in the sense that it would be expected to contain sound exceeding injury criteria for all marine mammal hearing groups (Table 7) while also providing a consistent, reasonably observable zone within which PSOs would typically be able to conduct effective observational effort. In this case, the 100-m radial distance would also be expected to contain sound that would exceed the Level A harassment threshold based on sound exposure level (SEL_{cum}) criteria for all marine mammal hearing groups (Table 7). In the 2011 Programmatic Environmental Impact Statement for marine scientific research funded by the National Science Foundation or the U.S. Geological Survey (NSF–USGS 2011), Alternative B (the Preferred Alternative) conservatively applied a 100-m EZ for all low-energy acoustic sources in water depths >100 m, with low-energy acoustic sources defined as any towed acoustic source with a single or a pair of clustered airguns with individual volumes of ≤250 in^3. Thus the 100-m EZ proposed for this survey is consistent with the PEIS.

Our intent in prescribing a standard EZ distance is to (1) encompass zones within which auditory injury could occur on the basis of instantaneous exposure; (2) provide additional protection from the potential for more severe behavioral reactions (*e.g.,* panic, antipredator response) for marine mammals at relatively close range to the acoustic source; (3) provide consistency for PSOs, who need to monitor and implement the EZ; and (4) define a distance within which detection probabilities are reasonably high for most species under typical conditions.

PSOs will also establish and monitor a 200-m buffer zone. During use of the acoustic source, occurrence of marine mammals within the buffer zone (but outside the EZ) will be communicated to the operator to prepare for potential shutdown of the acoustic source. The buffer zone is discussed further under *Ramp Up Procedures* below.

An extended EZ of 500 m would be enforced for all beaked whales, *Kogia* species, and Southern right whales. SIO would also enforce a 500-m EZ for aggregations of six or more large whales (*i.e.,* sperm whale or any baleen whale) that does not appear to be traveling (*e.g.,* feeding, socializing, etc.) or a large whale with a calf (calf defined as an animal less than two-thirds the body size of an adult observed to be in close association with an adult).

Shutdown Procedures

If a marine mammal is detected outside the EZ but is likely to enter the EZ, the airguns would be shut down before the animal is within the EZ. Likewise, if a marine mammal is already within the EZ when first detected, the airguns would be shut down immediately.

Following a shutdown, airgun activity would not resume until the marine mammal has cleared the 100-m EZ. The animal would be considered to have cleared the 100-m EZ if the following conditions have been met:

- It is visually observed to have departed the 100-m EZ;
- it has not been seen within the 100-m EZ for 15 min in the case of small odontocetes and pinnipeds; or
- it has not been seen within the 100-m EZ for 30 min in the case of mysticetes and large odontocetes (including sperm whale beaked whales), and also pygmy sperm, dwarf sperm and beaked whales.

This shutdown requirement would be in place for all marine mammals, with the exception of small delphinoids under certain circumstances. As defined here, the small delphinoid group is intended to encompass those members of the Family Delphinidae most likely to voluntarily approach the source vessel for purposes of interacting with the vessel and/or airgun array (*e.g.,* bow riding). This exception to the shutdown requirement would apply solely to specific genera of small dolphins—*Delphinus, Lagenodelphis,*

Lagenorhynchus, Lissodelphis, Stenella, Steno, and *Tursiops*—and would only apply if the animals were traveling, including approaching the vessel. If, for example, an animal or group of animals is stationary for some reason (*e.g.,* feeding) and the source vessel approaches the animals, the shutdown requirement applies. An animal with sufficient incentive to remain in an area rather than avoid an otherwise aversive stimulus could either incur auditory injury or disruption of important behavior. If there is uncertainty regarding identification (*i.e.,* whether the observed animal(s) belongs to the group described above) or whether the animals are traveling, the shutdown would be implemented.

We include this small delphinoid exception because shutdown requirements for small delphinoids under all circumstances represent practicability concerns without likely commensurate benefits for the animals in question. Small delphinoids are generally the most commonly observed marine mammals in the specific geographic region and would typically be the only marine mammals likely to intentionally approach the vessel. As described above, auditory injury is extremely unlikely to occur for mid-frequency cetaceans (*e.g.,* delphinids), as this group is relatively insensitive to sound produced at the predominant frequencies in an airgun pulse while also having a relatively high threshold for the onset of auditory injury (*i.e.,* permanent threshold shift).

A large body of anecdotal evidence indicates that small delphinoids commonly approach vessels and/or towed arrays during active sound production for purposes of bow riding, with no apparent effect observed in those delphinoids (*e.g.,* Barkaszi *et al.,* 2012). The potential for increased shutdowns resulting from such a measure would require the *Thompson* to revisit the missed track line to reacquire data, resulting in an overall increase in the total sound energy input to the marine environment and an increase in the total duration over which the survey is active in a given area. Although other mid-frequency hearing specialists (*e.g.,* large delphinoids) are no more likely to incur auditory injury than are small delphinoids, they are much less likely to approach vessels. Therefore, retaining a power-down/shutdown requirement for large delphinoids would not have similar impacts in terms of either practicability for the applicant or corollary increase in sound energy output and time on the water. We do anticipate some benefit for a shutdown requirement for large delphinoids in that it simplifies somewhat the total range of decision-making for PSOs and may preclude any potential for physiological effects other than to the auditory system as well as some more severe behavioral reactions for any such animals in close proximity to the source vessel.

Shutdown of the acoustic source would also be required upon observation of a species for which authorization has not been granted, or a species for which authorization has been granted but the authorized number of takes are met, observed approaching or within the Level A or Level B harassment zones.

Ramp-Up Procedures

Ramp-up of an acoustic source is intended to provide a gradual increase in sound levels following a shutdown, enabling animals to move away from the source if the signal is sufficiently aversive prior to its reaching full intensity. Ramp-up would be required after the array is shut down for any reason for longer than 15 minutes. Ramp-up would begin with the activation of one 45 in^3 airgun, with the second 45 in^3 airgun activated after 5 minutes.

Two PSOs would be required to monitor during ramp-up. During ramp up, the PSOs would monitor the EZ, and if marine mammals were observed within the EZ or buffer zone, a shutdown would be implemented as though the full array were operational. If airguns have been shut down due to PSO detection of a marine mammal within or approaching the 100 m EZ, ramp-up would not be initiated until all marine mammals have cleared the EZ, during the day or night. Criteria for clearing the EZ would be as described above.

Thirty minutes of pre-clearance observation are required prior to ramp-up for any shutdown of longer than 30 minutes (*i.e.,* if the array were shut down during transit from one line to another). This 30-minute pre-clearance period may occur during any vessel activity (*i.e.,* transit). If a marine mammal were observed within or approaching the 100 m EZ during this pre-clearance period, ramp-up would not be initiated until all marine mammals cleared the EZ. Criteria for clearing the EZ would be as described above. If the airgun array has been shut down for reasons other than mitigation (*e.g.,* mechanical difficulty) for a period of less than 30 minutes, it may be activated again without ramp-up if PSOs have maintained constant visual observation and no detections of any marine mammal have occurred within the EZ or buffer zone. Ramp-up would be planned to occur during periods of good visibility when possible. However, ramp-up would be allowed at night and during poor visibility if the 100 m EZ and 200 m buffer zone have been monitored by visual PSOs for 30 minutes prior to ramp-up.

The operator would be required to notify a designated PSO of the planned start of ramp-up as agreed-upon with the lead PSO; the notification time should not be less than 60 minutes prior to the planned ramp-up. A designated PSO must be notified again immediately prior to initiating ramp-up procedures and the operator must receive confirmation from the PSO to proceed. The operator must provide information to PSOs documenting that appropriate procedures were followed. Following deactivation of the array for reasons other than mitigation, the operator would be required to communicate the near-term operational plan to the lead PSO with justification for any planned nighttime ramp-up.

Vessel Strike Avoidance Measures

Vessel strike avoidance measures are intended to minimize the potential for collisions with marine mammals. These requirements do not apply in any case where compliance would create an imminent and serious threat to a person or vessel or to the extent that a vessel is restricted in its ability to maneuver and, because of the restriction, cannot comply.

The proposed measures include the following: Vessel operator and crew would maintain a vigilant watch for all marine mammals and slow down or stop the vessel or alter course to avoid striking any marine mammal. A visual observer aboard the vessel would monitor a vessel strike avoidance zone around the vessel according to the parameters stated below. Visual observers monitoring the vessel strike avoidance zone would be either third-party observers or crew members, but crew members responsible for these duties would be provided sufficient training to distinguish marine mammals from other phenomena. Vessel strike avoidance measures would be followed during surveys and while in transit.

The vessel would maintain a minimum separation distance of 100 m from large whales (*i.e.,* baleen whales and sperm whales). If a large whale is within 100 m of the vessel, the vessel would reduce speed and shift the engine to neutral, and would not engage the engines until the whale has moved outside of the vessel's path and the minimum separation distance has been

established. If the vessel is stationary, the vessel would not engage engines until the whale(s) has moved out of the vessel's path and beyond 100 m. The vessel would maintain a minimum separation distance of 50 m from all other marine mammals (with the exception of delphinids of the genera *Delphinus, Lagenodelphis, Lagenorhynchus, Lissodelphis, Stenella, Steno,* and *Tursiops* that approach the vessel, as described above). If an animal is encountered during transit, the vessel would attempt to remain parallel to the animal's course, avoiding excessive speed or abrupt changes in course. Vessel speeds would be reduced to 10 kn or less when mother/calf pairs, pods, or large assemblages of cetaceans are observed near the vessel.

Based on our evaluation of the applicant's proposed measures, NMFS has preliminarily determined that the proposed mitigation measures provide the means effecting the least practicable impact on the affected species or stocks and their habitat, paying particular attention to rookeries, mating grounds, and areas of similar significance.

Proposed Monitoring and Reporting

In order to issue an IHA for an activity, Section 101(a)(5)(D) of the MMPA states that NMFS must set forth requirements pertaining to the monitoring and reporting of such taking. The MMPA implementing regulations at 50 CFR 216.104 (a)(13) indicate that requests for authorizations must include the suggested means of accomplishing the necessary monitoring and reporting that will result in increased knowledge of the species and of the level of taking or impacts on populations of marine mammals that are expected to be present in the proposed action area. Effective reporting is critical both to compliance as well as ensuring that the most value is obtained from the required monitoring.

Monitoring and reporting requirements prescribed by NMFS should contribute to improved understanding of one or more of the following:

- Occurrence of marine mammal species or stocks in the area in which take is anticipated (*e.g.,* presence, abundance, distribution, density);
- Nature, scope, or context of likely marine mammal exposure to potential stressors/impacts (individual or cumulative, acute or chronic), through better understanding of: (1) Action or environment (*e.g.,* source characterization, propagation, ambient noise); (2) affected species (*e.g.,* life history, dive patterns); (3) co-occurrence of marine mammal species with the action; or (4) biological or behavioral context of exposure (*e.g.,* age, calving or feeding areas);
- Individual marine mammal responses (behavioral or physiological) to acoustic stressors (acute, chronic, or cumulative), other stressors, or cumulative impacts from multiple stressors;
- How anticipated responses to stressors impact either: (1) Long-term fitness and survival of individual marine mammals; or (2) populations, species, or stocks;
- Effects on marine mammal habitat (*e.g.,* marine mammal prey species, acoustic habitat, or other important physical components of marine mammal habitat); and
- Mitigation and monitoring effectiveness.

SIO described marine mammal monitoring and reporting plan within their IHA application. Monitoring that is designed specifically to facilitate mitigation measures, such as monitoring of the EZ to inform potential shutdowns of the airgun array, are described above and are not repeated here. SIO's monitoring and reporting plan includes the following measures:

Vessel-Based Visual Monitoring

As described above, PSO observations would take place during daytime airgun operations and nighttime start-ups (if applicable) of the airguns. During seismic operations, three visual PSOs would be based aboard the *Thompson.* PSOs would be appointed by SIO with NMFS approval. The PSOs must have successfully completed relevant training, including completion of all required coursework and passing a written and/or oral examination developed for the training program, and must have successfully attained a bachelor's degree from an accredited college or university with a major in one of the natural sciences and a minimum of 30 semester hours or equivalent in the biological sciences and at least one undergraduate course in math or statistics. The educational requirements may be waived if the PSO has acquired the relevant skills through alternate training, including (1) secondary education and/or experience comparable to PSO duties; (2) previous work experience conducting academic, commercial, or government-sponsored marine mammal surveys; or (3) previous work experience as a PSO; the PSO should demonstrate good standing and consistently good performance of PSO duties.

During the majority of seismic operations, one PSO would monitor for marine mammals around the seismic vessel. PSOs would be on duty in shifts of duration no longer than 4 hours. Other crew would also be instructed to assist in detecting marine mammals and in implementing mitigation requirements (if practical). During daytime, PSOs would scan the area around the vessel systematically with reticle binoculars (*e.g.,* 7x50 Fujinon) and with the naked eye. At night, PSOs would be equipped with night-vision equipment.

PSOs would record data to estimate the numbers of marine mammals exposed to various received sound levels and to document apparent disturbance reactions or lack thereof. Data would be used to estimate numbers of animals potentially 'taken' by harassment (as defined in the MMPA). They would also provide information needed to order a shutdown of the airguns when a marine mammal is within or near the EZ. When a sighting is made, the following information about the sighting would be recorded:

(1) Species, group size, age/size/sex categories (if determinable), behavior when first sighted and after initial sighting, heading (if consistent), bearing and distance from seismic vessel, sighting cue, apparent reaction to the airguns or vessel (*e.g.,* none, avoidance, approach, paralleling, etc.), and behavioral pace; and

(2) Time, location, heading, speed, activity of the vessel, sea state, visibility, and sun glare.

All observations and shutdowns would be recorded in a standardized format. Data would be entered into an electronic database. The accuracy of the data entry would be verified by computerized data validity checks as the data are entered and by subsequent manual checking of the database. These procedures would allow initial summaries of data to be prepared during and shortly after the field program and would facilitate transfer of the data to statistical, graphical, and other programs for further processing and archiving. The time, location, heading, speed, activity of the vessel, sea state, visibility, and sun glare would also be recorded at the start and end of each observation watch, and during a watch whenever there is a change in one or more of the variables.

Results from the vessel-based observations would provide:

(1) The basis for real-time mitigation (*e.g.,* airgun shutdown);

(2) Information needed to estimate the number of marine mammals potentially taken by harassment, which must be reported to NMFS;

(3) Data on the occurrence, distribution, and activities of marine

mammals in the area where the seismic study is conducted;

(4) Information to compare the distance and distribution of marine mammals relative to the source vessel at times with and without seismic activity; and

(5) Data on the behavior and movement patterns of marine mammals seen at times with and without seismic activity.

Reporting

A draft report would be submitted to NMFS within 90 days after the end of the survey. The report would describe the operations that were conducted and sightings of marine mammals near the operations. The report would provide full documentation of methods, results, and interpretation pertaining to all monitoring and would summarize the dates and locations of seismic operations, and all marine mammal sightings (dates, times, locations, activities, associated seismic survey activities). The report would also include estimates of the number and nature of exposures that occurred above the harassment threshold based on PSO observations, including an estimate of those that were not detected in consideration of both the characteristics and behaviors of the species of marine mammals that affect detectability, as well as the environmental factors that affect detectability.

The draft report shall also include geo-referenced time-stamped vessel tracklines for all time periods during which airguns were operating. Tracklines should include points recording any change in airgun status (*e.g.,* when the airguns began operating, when they were turned off, or when they changed from full array to single gun or vice versa). GIS files shall be provided in ESRI shapefile format and include the UTC date and time, latitude in decimal degrees, and longitude in decimal degrees. All coordinates shall be referenced to the WGS84 geographic coordinate system. In addition to the report, all raw observational data shall be made available to NMFS. The draft report must be accompanied by a certification from the lead PSO as to the accuracy of the report, and the lead PSO may submit directly NMFS a statement concerning implementation and effectiveness of the required mitigation and monitoring. A final report must be submitted within 30 days following resolution of any comments on the draft report.

Negligible Impact Analysis and Determination

NMFS has defined negligible impact as an impact resulting from the specified activity that cannot be reasonably expected to, and is not reasonably likely to, adversely affect the species or stock through effects on annual rates of recruitment or survival (50 CFR 216.103). A negligible impact finding is based on the lack of likely adverse effects on annual rates of recruitment or survival (*i.e.,* population-level effects). An estimate of the number of takes alone is not enough information on which to base an impact determination. In addition to considering estimates of the number of marine mammals that might be ''taken'' through harassment, NMFS considers other factors, such as the likely nature of any responses (*e.g.,* intensity, duration), the context of any responses (*e.g.,* critical reproductive time or location, migration), as well as effects on habitat, and the likely effectiveness of the mitigation. We also assess the number, intensity, and context of estimated takes by evaluating this information relative to population status. Consistent with the 1989 preamble for NMFS's implementing regulations (54 FR 40338; September 29, 1989), the impacts from other past and ongoing anthropogenic activities are incorporated into this analysis via their impacts on the environmental baseline (*e.g.,* as reflected in the regulatory status of the species, population size and growth rate where known, ongoing sources of human-caused mortality, or ambient noise levels).

To avoid repetition, our analysis applies to all the species listed in Table 2, given that NMFS expects the anticipated effects of the proposed seismic survey to be similar in nature. Where there are meaningful differences between species or stocks, or groups of species, in anticipated individual responses to activities, impact of expected take on the population due to differences in population status, or impacts on habitat, NMFS has identified species-specific factors to inform the analysis.

NMFS does not anticipate that serious injury or mortality would occur as a result of SIO's proposed seismic survey, even in the absence of proposed mitigation. Thus the proposed authorization does not authorize any mortality. As discussed in the *Potential Effects* section, neither stranding nor vessel strike are expected to occur.

No takes by Level A harassment are proposed to be authorized. The 100-m exclusion zone encompasses the Level A harassment isopleths for all marine mammal hearing groups, and is expected to prevent animals from being exposed to sound levels that would cause PTS. Also, as described above, we expect that marine mammals would be likely to move away from a sound source that represents an aversive stimulus, especially at levels that would be expected to result in PTS, given sufficient notice of the *Thompson's* approach due to the vessel's relatively low speed when conducting seismic surveys. We expect that any instances of take would be in the form of short-term Level B behavioral harassment in the form of temporary avoidance of the area or short-term decreased foraging (if such activity were occurring), reactions that are considered to be of low severity and with no lasting biological consequences (*e.g.,* Southall *et al.,* 2007). Feeding behavior is not likely to be significantly impacted, as marine mammals appear to be less likely to exhibit behavioral reactions or avoidance responses while engaged in feeding activities (Richardson *et al.,* 1995).

Potential impacts to marine mammal habitat were discussed previously in this document (see *Potential Effects of the Specified Activity on Marine Mammals and their Habitat*). Marine mammal habitat may be impacted by elevated sound levels, but these impacts would be temporary. Prey species are mobile and are broadly distributed throughout the project area; therefore, marine mammals that may be temporarily displaced during survey activities are expected to be able to resume foraging once they have moved away from areas with disturbing levels of underwater noise.

Because of the temporary nature of the disturbance, the availability of similar habitat and resources in the surrounding area, and the lack of important or unique marine mammal habitat, the impacts to marine mammals and the food sources that they utilize are not expected to cause significant or long-term consequences for individual marine mammals or their populations. In addition, there are no feeding, mating or calving areas known to be biologically important to marine mammals within the proposed project area.

As described above, marine mammals in the survey area are not assigned to NMFS stocks. For purposes of the small numbers analysis we rely on the best available information on the abundance estimates for the species of marine mammals that could be taken. The activity is expected to impact a very small percentage of all marine mammal populations, most cases 0.1 percent or

less that would be affected by SIO's proposed survey (less than 5.3 percent each for all marine mammal populations where abundance estimates exist). Additionally, the acoustic ''footprint'' of the proposed survey would be very small relative to the ranges of all marine mammals that would potentially be affected. Sound levels would increase in the marine environment in a relatively small area surrounding the vessel compared to the range of the marine mammals within the proposed survey area. The seismic array would be active 24 hours per day throughout the duration of the proposed survey. However, the very brief overall duration of the proposed survey (14 days) would further limit potential impacts that may occur as a result of the proposed activity.

The proposed mitigation measures are expected to reduce the number and/or severity of takes by allowing for detection of marine mammals in the vicinity of the vessel by visual and acoustic observers, and by minimizing the severity of any potential exposures via shutdowns of the airgun array. Based on previous monitoring reports for substantially similar activities that have been previously authorized by NMFS, we expect that the proposed mitigation will be effective in preventing at least some extent of potential PTS in marine mammals that may otherwise occur in the absence of the proposed mitigation.

Of the marine mammal species under our jurisdiction that are likely to occur in the project area, the following species are listed as endangered under the ESA: Fin, sei, blue, sperm, and southern right whales. We are proposing to authorize very small numbers of takes for these species (Table 11), relative to their population sizes (again, for species where population abundance estimates exist), therefore we do not expect population-level impacts to any of these species. The other marine mammal species that may be taken by harassment during SIO's seismic survey are not listed as threatened or endangered under the ESA. There is no designated critical habitat for any ESA-listed marine mammals within the project area; of the non-listed marine mammals for which we propose to authorize take, none are considered ''depleted'' or ''strategic'' by NMFS under the MMPA.

NMFS concludes that exposures to marine mammal species due to SIO's proposed seismic survey would result in only short-term (temporary and short in duration) effects of Level B harassment to individuals exposed. Marine mammals may temporarily avoid the immediate area, but are not expected to permanently abandon the area. Major shifts in habitat use, distribution, or foraging success are not expected. NMFS does not anticipate the proposed take estimates to impact annual rates of recruitment or survival.

In summary and as described above, the following factors primarily support our preliminary determination that the impacts resulting from this activity are not expected to adversely affect the species or stock through effects on annual rates of recruitment or survival:

- No mortality is anticipated or authorized;
- No take by Level A harassment is anticipated or authorized;
- The anticipated impacts of the proposed activity on marine mammals would primarily be temporary behavioral changes due to avoidance of the area around the survey vessel. The relatively short duration of the proposed survey (14 days) would further limit the potential impacts of any temporary behavioral changes that would occur;
- The availability of alternate areas of similar habitat value for marine mammals to temporarily vacate the survey area during the proposed survey to avoid exposure to sounds from the activity;
- The proposed project area does not contain areas of significance for feeding, mating or calving;
- The potential adverse effects on fish or invertebrate species that serve as prey species for marine mammals from the proposed survey would be temporary and spatially limited; and
- The proposed mitigation measures, including visual and acoustic monitoring and shutdowns, are expected to minimize potential impacts to marine mammals.

Based on the analysis contained herein of the likely effects of the specified activity on marine mammals and their habitat, and taking into consideration the implementation of the proposed monitoring and mitigation measures, NMFS preliminarily finds that the total marine mammal take from the proposed activity will have a negligible impact on all affected marine mammal species or stocks.

Small Numbers

As noted above, only small numbers of incidental take may be authorized under Sections 101(a)(5)(A) and (D) of the MMPA for specified activities other than military readiness activities. The MMPA does not define small numbers and so, in practice, where estimated numbers are available, NMFS compares the number of individuals taken to the most appropriate estimation of abundance of the relevant species or stock in our determination of whether an authorization is limited to small numbers of marine mammals. Additionally, other qualitative factors may be considered in the analysis, such as the temporal or spatial scale of the activities.

The numbers of marine mammals that we authorize to be taken would be considered small relative to the relevant populations (less than 5.3 percent for all species) for the species for which abundance estimates are available. No known current worldwide or regional population estimates are available for 16 species under NMFS jurisdiction that could be incidentally taken as a result of the proposed survey: The pygmy right whale, pygmy sperm whale, dwarf sperm whale, Shepherd's beaked whale, Blainville's beaked whale, Hector's beaked whale, Gervais' beaked whale, True's beaked whale, Andrew's beaked whale, spade-toothed beaked whale, rough-toothed dolphin, spinner dolphin, Clymene dolphin, Fraser's dolphin, southern right whale dolphin, false killer whale, pygmy killer whale, and Melon-headed whale and Cape fur seal.

NMFS has reviewed the geographic distributions and habitat preferences of these species in determining whether the numbers of takes authorized herein are likely to represent small numbers. Pygmy right whales have a circumglobal distribution and occur throughout coastal and oceanic waters in the Southern Hemisphere (between 30 to 55° S) (Jefferson *et al.* 2015; Kemper 2018). Pygmy and dwarf sperm whales occur in deep waters on the outer continental shelf and slope in tropical to temperate waters of the Atlantic, Indian, and Pacific Oceans, but their precise distributions are unknown because much of what we know of the species comes from strandings (McAlpine 2018). Based on stranding records and the known habitat preferences of beaked whales in general, Shepherd's beaked whales are assumed to have a circumpolar distribution in deep, cold temperate waters of the Southern Ocean (Pitman *et al.,* 2006; Mead 2018). Blainville's beaked whale is the most widely distributed beaked *Mesoplodon* species with sightings and stranding records throughout the North and South Atlantic Ocean (MacLeod *et al.,* 2006; Pitman 2018). Hector's beaked whales are found in cold temperate waters throughout the southern hemisphere between 35° S and 55° S (Zerbini and Secchi 2001; Pitman 2018). True's beaked whale has a disjunct, antitropical distribution (Jefferson *et al.* 2015). In the Southern Hemisphere, it is known to occur in South Africa, South

America, and Australia (Findlay *et al.* 1992; Souza *et al.* 2005; MacLeod and Mitchell 2006; MacLeod *et al.* 2006; Best *et al.* 2009). Andrew's beaked whales have a circumpolar distribution north of the Antarctic Convergence to 32° S (MacLeod *et al.,* 2006; Pitman 2018). Andrew's beaked whale is known only from stranding records between 32° S and 55° S, with more than half of the strandings occurring in New Zealand (Jefferson *et al.* 2015). Gervais' beaked whale is generally considered to be a North Atlantic species, it likely occurs in deep waters of the temperate and tropical Atlantic Ocean in both the northern and southern hemispheres (Jefferson *et al.* 2015). The southernmost stranding record was reported for São Paulo, Brazil, possibly expanding the known distributional range of this species southward (Santos *et al.* 2003), but the distribution range of Gervais' beaked whale is not generally known to extend as far south as the proposed project area. The spade-toothed beaked whale is considered relatively rare and is known from only four records, three from New Zealand and one from Chile (Thompson *et al.* 2012). The rough-toothed dolphin is distributed worldwide in tropical and subtropical waters (Jefferson *et al.* 2015). Rough-toothed dolphins are generally seen in deep, oceanic water, although it is known to occur in coastal waters of Brazil (Jefferson *et al.,* 2015; Cardoso *et al.,* 2019). The Clymene dolphin only occurs in tropical and subtropical waters of the Atlantic Ocean (Jefferson *et al.,* 2015). Clymeme dolphins inhabits areas where water depths are 700–4500 m or deeper (Fertl *et al.,* 2003). Fraser's dolphins are distributed in tropical oceanic waters worldwide, between 30° N and 30° S and generally inhabits deeper, offshore water (Moreno *et al.,* 2003, Dolar 2018). The southern right whale dolphin is distributed between the Subtropical and Antarctic convergences in the Southern Hemisphere, generally between ~30° S and 65° S (Jefferson *et al.,* 2015; Lipsky and Brownell 2018). The false killer whale is found worldwide in tropical and temperate waters, generally between 50° N and 50° S (Odell and McClune 1999). It is widely distributed, but not abundant anywhere (Carwardine 1995). The false killer whale generally inhabits deep, offshore waters, but sometimes is found over the continental shelf and occasionally moves into very shallow water (Jefferson *et al.* 2015; Baird 2018b). The pygmy killer whale has a worldwide distribution in tropical and subtropical waters, generally not ranging south of 35° S (Jefferson *et al.* 2015). The melon-headed whale is an oceanic species found worldwide in tropical and subtropical waters from ~40° N to 35° S (Jefferson *et al.* 2015). The Cape fur seal currently breeds at 40 colonies along the coast of South Africa, Namibia, and Angola, including on the mainland and nearshore islands (Kirkman *et al.* 2013). There have been several new breeding colonies established in recent years, as the population has shifted northward (Kirkman *et al.* 2013). More than half of the seal population occurs in Namibia (Wickens *et al.* 1991). High densities have been observed between 30 and 60 nm from shore, with densities dropping farther offshore (Thomas and Schülein 1988).

Based on the broad spatial distributions and habitat preferences of these species relative to the areas where SIO's proposed survey will occur, NMFS preliminarily concludes that the proposed take of these species likely represent small numbers relative to the affected species' overall population sizes, though we are unable to quantify the take numbers as a percentage of population.

Based on the analysis contained herein of the proposed activity (including the proposed mitigation and monitoring measures) and the anticipated take of marine mammals, NMFS preliminarily finds that small numbers of marine mammals will be taken relative to the population size of the affected species or stocks.

Unmitigable Adverse Impact Analysis and Determination

There are no relevant subsistence uses of the affected marine mammal stocks or species implicated by this action. Therefore, NMFS has preliminarily determined that the total taking of affected species or stocks would not have an unmitigable adverse impact on the availability of such species or stocks for taking for subsistence purposes.

Endangered Species Act (ESA)

Section 7(a)(2) of the Endangered Species Act of 1973 (ESA: 16 U.S.C. 1531 *et seq.*) requires that each Federal agency insure that any action it authorizes, funds, or carries out is not likely to jeopardize the continued existence of any endangered or threatened species or result in the destruction or adverse modification of designated critical habitat. To ensure ESA compliance for the issuance of IHAs, NMFS consults internally, in this case with the ESA Interagency Cooperation Division, whenever we propose to authorize take for endangered or threatened species.

NMFS is proposing to authorize take of fin, sei, blue, sperm, and southern right whales which are listed under the ESA. The Permit and Conservation Division has requested initiation of Section 7 consultation with the Interagency Cooperation Division for the issuance of this IHA. NMFS will conclude the ESA consultation prior to reaching a determination regarding the proposed issuance of the authorization.

Proposed Authorization

As a result of these preliminary determinations, NMFS proposes to issue an IHA to SIO for conducting a marine geophysical survey in the southwest Atlantic Ocean in November and December 2019, provided the previously mentioned mitigation, monitoring, and reporting requirements are incorporated. A draft of the proposed IHA can be found at *https://www.fisheries.noaa.gov/permit/incidental-take-authorizations-under-marine-mammal-protection-act.*

Request for Public Comments

We request comment on our analyses, the proposed authorization, and any other aspect of this Notice of Proposed IHA for the proposed survey. We also request comment on the potential for renewal of this proposed IHA as described in the paragraph below. Please include with your comments any supporting data or literature citations to help inform our final decision on the request for MMPA authorization.

On a case-by-case basis, NMFS may issue a one-year IHA renewal with an additional 15 days for public comments when (1) another year of identical or nearly identical activities as described in the Specified Activities section of this notice is planned or (2) the activities as described in the Specified Activities section of this notice would not be completed by the time the IHA expires and a Renewal would allow for completion of the activities beyond that described in the Dates and Duration section of this notice, provided all of the following conditions are met:

- A request for renewal is received no later than 60 days prior to expiration of the current IHA;
- The request for renewal must include the following:

(1) An explanation that the activities to be conducted under the requested Renewal are identical to the activities analyzed under the initial IHA, are a subset of the activities, or include changes so minor (*e.g.,* reduction in pile size) that the changes do not affect the previous analyses, mitigation and monitoring requirements, or take estimates (with the exception of

reducing the type or amount of take because only a subset of the initially analyzed activities remain to be completed under the Renewal); and

(2) A preliminary monitoring report showing the results of the required monitoring to date and an explanation showing that the monitoring results do not indicate impacts of a scale or nature not previously analyzed or authorized;

Upon review of the request for Renewal, the status of the affected species or stocks, and any other pertinent information, NMFS determines that there are no more than minor changes in the activities, the mitigation and monitoring measures will remain the same and appropriate, and the findings in the initial IHA remain valid.

Dated: September 24, 2019.

Donna S. Wieting,

Director, Office of Protected Resources, National Marine Fisheries Service.

[FR Doc. 2019–21090 Filed 9–27–19; 8:45 am]

BILLING CODE 3510–22–P

FEDERAL REGISTER

Vol. 84 Monday,

No. 189 September 30, 2019

Part V

The President

Proclamation 9931—Suspension of Entry as Immigrants and Nonimmigrants of Persons Responsible for Policies or Actions That Threaten Venezuela's Democratic Institutions

Proclamation 9932—Suspension of Entry as Immigrants and Nonimmigrants of Senior Officials of the Government of Iran

Federal Register
Vol. 84, No. 189
Monday, September 30, 2019

Presidential Documents

Title 3—

The President

Proclamation 9931 of September 25, 2019

Suspension of Entry as Immigrants and Nonimmigrants of Persons Responsible for Policies or Actions That Threaten Venezuela's Democratic Institutions

By the President of the United States of America

A Proclamation

There remains a political and humanitarian crisis in Venezuela due to the continued failure of Nicolas Maduro, Maduro regime officials, and others to support the rule of law. Given the importance to the United States of fostering the functioning of constitutional government and democratic institutions in Venezuela, I have determined that it is in the interest of the United States to take action to restrict and suspend the entry into the United States, as immigrants or nonimmigrants, of senior members of the regime of Nicolas Maduro and others described in this proclamation who formulate, implement, or benefit from policies or actions that undermine or injure Venezuela's democratic institutions or impede the restoration of constitutional government to Venezuela. This suspension is not intended to apply to those who cease these actions and who take concrete steps to help return Venezuela to a functioning, democratic country.

NOW, THEREFORE, I, DONALD J. TRUMP, by the authority vested in me by the Constitution and the laws of the United States of America, including sections 212(f) and 215(a) of the Immigration and Nationality Act (INA) (8 U.S.C. 1182(f) and 1185(a)) and section 301 of title 3, United States Code, hereby find that the unrestricted immigrant and nonimmigrant entry into the United States of persons described in section 1 of this proclamation would, except as provided for in section 4 of this proclamation, be detrimental to the interests of the United States, and that their entry should be subject to certain restrictions, limitations, and exceptions. I therefore hereby proclaim the following:

Section 1. *Suspension and Limitation on Entry.* The entry into the United States, as immigrants or nonimmigrants, of the following persons is hereby suspended:

(a) Members of the regime of Nicolas Maduro at the level of Vice Minister, or equivalent, and above;

(b) All officers of the Venezuelan military, police, or National Guard at the rank of Colonel, or equivalent, and above;

(c) All members of the organization known as the National Constituent Assembly of Venezuela;

(d) All other aliens who act on behalf of or in support of the Maduro regime's efforts to undermine or injure Venezuela's democratic institutions or impede the restoration of constitutional government to Venezuela;

(e) Aliens who derive significant financial benefit from transactions or business dealings with persons described in subsections (a) through (d) of this section; and

(f) The immediate family members of persons described in subsections (a) through (e) of this section.

Sec. 2. *Delegation of Authority to the Secretary of State.* Persons covered by section 1 of this proclamation shall be identified by the Secretary of

State, or the Secretary's designee, in his or her sole discretion, pursuant to such procedures as the Secretary may establish under section 3 of this proclamation.

Sec. 3. *Implementation of Suspension and Limitation on Entry.* The Secretary of State shall implement this proclamation as it applies to visas pursuant to such procedures as the Secretary of State, in consultation with the Secretary of Homeland Security, may establish. The Secretary of Homeland Security shall implement this proclamation as it applies to the entry of aliens pursuant to such procedures as the Secretary of Homeland Security, in consultation with the Secretary of State, may establish.

Sec. 4. *Scope of Suspension and Limitation on Entry.* Section 1 of this proclamation shall not apply to:

(a) Any lawful permanent resident of the United States;

(b) Any individual who has been granted asylum by the United States, any refugee who has already been admitted to the United States, or any individual granted withholding of removal or protection under the Convention Against Torture and Other Cruel, Inhuman or Degrading Treatment or Punishment, and nothing in this proclamation shall be construed to affect any individual's eligibility for asylum, refugee status, withholding of removal, or protection under the Convention Against Torture, consistent with the laws and regulations of the United States; and

(c) Any person otherwise covered by section 1 of this proclamation, upon determination by the Secretary of State that the person's entry would not be contrary to the interests of the United States, including when the Secretary so determines, based on a recommendation of the Attorney General, that the person's entry would further important United States law enforcement objectives. In exercising this responsibility, the Secretary of State shall consult the Secretary of Homeland Security on matters related to admissibility or inadmissibility within the authority of the Secretary of Homeland Security.

Sec. 5. *Termination.* This proclamation shall remain in effect until such time as the Secretary of State determines that it is no longer necessary and should be terminated, either in whole or in part. Any such determination by the Secretary of State shall become effective upon publication in the *Federal Register.*

Sec. 6. *General Provisions.* (a) Nothing in this proclamation shall be construed to impair or otherwise affect:

(i) United States Government obligations under applicable international agreements;

(ii) the authority granted by law to an executive department or agency, or the head thereof; or

(iii) the functions of the Director of the Office of Management and Budget relating to budgetary, administrative, or legislative proposals.

(b) This proclamation shall be implemented consistent with applicable law and subject to the availability of appropriations.

(c) This proclamation is not intended to, and does not, create any right or benefit, substantive or procedural, enforceable at law or in equity by any party against the United States, its departments, agencies, or entities, its officers, employees, or agents, or any other person.

IN WITNESS WHEREOF, I have hereunto set my hand this twenty-fifth day of September, in the year of our Lord two thousand nineteen, and of the Independence of the United States of America the two hundred and forty-fourth.

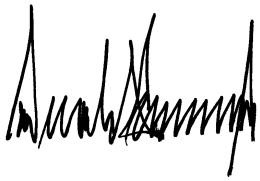

[FR Doc. 2019–21398
Filed 9–27–19; 11:15 am]
Billing code 3295–F9–P

Presidential Documents

Proclamation 9932 of September 25, 2019

Suspension of Entry as Immigrants and Nonimmigrants of Senior Officials of the Government of Iran

By the President of the United States of America

A Proclamation

The Government of Iran is a state sponsor of terrorism, and the Islamic Revolutionary Guard Corps, including its Qods Force, supports terrorists and directly engages in terrorism. Iran arbitrarily detains United States citizens. The Iranian regime contributes to humanitarian crises, threatens its neighbors, threatens international shipping, and conducts destructive cyberattacks. Given that this behavior threatens peace and stability in the Middle East and beyond, I have determined that it is in the interest of the United States to take action to restrict and suspend the entry into the United States, as immigrants or nonimmigrants, of senior government officials of Iran, and their immediate family members.

NOW, THEREFORE, I, DONALD J. TRUMP, by the authority vested in me by the Constitution and the laws of the United States of America, including sections 212(f) and 215(a) of the Immigration and Nationality Act (INA) (8 U.S.C. 1182(f) and 1185(a)) and section 301 of title 3, United States Code, hereby find that the unrestricted immigrant and nonimmigrant entry into the United States of persons described in section 1 of this proclamation would, except as provided for in section 4 of this proclamation, be detrimental to the interests of the United States, and that their entry should be subject to certain restrictions, limitations, and exceptions. I therefore hereby proclaim the following:

Section 1. *Suspension and Limitation on Entry.* The entry into the United States, as immigrants or nonimmigrants, of the following persons is hereby suspended:

(a) Senior officials of the Government of Iran; and

(b) The immediate family members of senior officials of the Government of Iran.

Sec. 2. *Delegation of Authority to the Secretary of State.* Persons covered by section 1 of this proclamation shall be identified by the Secretary of State, or the Secretary's designee, in his or her sole discretion, pursuant to such procedures as the Secretary may establish under section 3 of this proclamation.

Sec. 3. *Implementation of Suspension and Limitation on Entry.* The Secretary of State shall implement this proclamation as it applies to visas pursuant to such procedures as the Secretary of State, in consultation with the Secretary of Homeland Security, may establish. The Secretary of Homeland Security shall implement this proclamation as it applies to the entry of aliens pursuant to such procedures as the Secretary of Homeland Security, in consultation with the Secretary of State, may establish.

Sec. 4. *Scope of Suspension and Limitation on Entry.* Section 1 of this proclamation shall not apply to:

(a) Any lawful permanent resident of the United States;

(b) Any individual who has been granted asylum by the United States, any refugee who has already been admitted to the United States, or any

individual granted withholding of removal or protection under the Convention Against Torture and Other Cruel, Inhuman or Degrading Treatment or Punishment, and nothing in this proclamation shall be construed to affect any individual's eligibility for asylum, refugee status, withholding of removal, or protection under the Convention Against Torture, consistent with the laws and regulations of the United States; and

(c) Any person otherwise covered by section 1 of this proclamation, upon determination by the Secretary of State that the person's entry would not be contrary to the interests of the United States, including when the Secretary so determines, based on a recommendation of the Attorney General, that the person's entry would further important United States law enforcement objectives. In exercising this responsibility, the Secretary of State shall consult the Secretary of Homeland Security on matters related to admissibility or inadmissibility within the authority of the Secretary of Homeland Security.

Sec. 5. *Termination.* This proclamation shall remain in effect until such time as the Secretary of State determines that it is no longer necessary and should be terminated, either in whole or in part. Any such determination by the Secretary of State shall become effective upon publication in the *Federal Register.*

Sec. 6. *General Provisions.* (a) Nothing in this proclamation shall be construed to impair or otherwise affect:

(i) United States Government obligations under applicable international agreements;

(ii) the authority granted by law to an executive department or agency, or the head thereof; or

(iii) the functions of the Director of the Office of Management and Budget relating to budgetary, administrative, or legislative proposals.

(b) This proclamation shall be implemented consistent with applicable law and subject to the availability of appropriations.

(c) This proclamation is not intended to, and does not, create any right or benefit, substantive or procedural, enforceable at law or in equity by any party against the United States, its departments, agencies, or entities, its officers, employees, or agents, or any other person.

IN WITNESS WHEREOF, I have hereunto set my hand this twenty-fifth day of September, in the year of our Lord two thousand nineteen, and of the Independence of the United States of America the two hundred and forty-fourth.

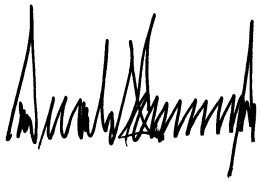

[FR Doc. 2019–21400
Filed 9–27–19; 11:15 am]
Billing code 3295–F9–P

Reader Aids

Federal Register

Vol. 84, No. 189

Monday, September 30, 2019

CUSTOMER SERVICE AND INFORMATION

Federal Register/Code of Federal Regulations	
General Information, indexes and other finding aids	**202–741–6000**
Laws	**741–6000**
Presidential Documents	
Executive orders and proclamations	**741–6000**
The United States Government Manual	**741–6000**
Other Services	
Electronic and on-line services (voice)	**741–6020**
Privacy Act Compilation	**741–6050**

ELECTRONIC RESEARCH

World Wide Web

Full text of the daily Federal Register, CFR and other publications is located at: **www.govinfo.gov.**

Federal Register information and research tools, including Public Inspection List and electronic text are located at: **www.federalregister.gov.**

E-mail

FEDREGTOC (Daily Federal Register Table of Contents Electronic Mailing List) is an open e-mail service that provides subscribers with a digital form of the Federal Register Table of Contents. The digital form of the Federal Register Table of Contents includes HTML and PDF links to the full text of each document.

To join or leave, go to **https://public.govdelivery.com/accounts/USGPOOFR/subscriber/new**, enter your email address, then follow the instructions to join, leave, or manage your subscription.

PENS (Public Law Electronic Notification Service) is an e-mail service that notifies subscribers of recently enacted laws.

To subscribe, go to **http://listserv.gsa.gov/archives/publaws-l.html and select** *Join or leave the list (or change settings);* then follow the instructions.

FEDREGTOC and **PENS** are mailing lists only. We cannot respond to specific inquiries.

Reference questions. Send questions and comments about the Federal Register system to: **fedreg.info@nara.gov**

The Federal Register staff cannot interpret specific documents or regulations.

FEDERAL REGISTER PAGES AND DATE, SEPTEMBER

45873–46418 3
46419–46652 4
46653–46874 5
46875–47114 6
47115–47404 9
47405–47874 10
47875–48040 11
48041–48228 12
48229–48546 13
48547–48782 16
48783–49004 17
49005–49190 18
49191–49434 19
49435–49634 20
49635–49934 23
49935–50286 24
50287–50710 25
50711–51004 26
51005–51364 27
51365–51936 30

CFR PARTS AFFECTED DURING SEPTEMBER

At the end of each month the Office of the Federal Register publishes separately a List of CFR Sections Affected (LSA), which lists parts and sections affected by documents published since the revision date of each title.

2 CFR

1800 49191

3 CFR

Proclamations:
9917 46865
9918 46867
9919 46869
9920 46871
9921 47873
9922 48223
9923 48225
9924 48541
9925 48547
9926 49003
9927 49185
9928 49187
9929 49629
9930 50709
9931 51931
9932 51935

Executive Orders:
13885 46873
13886 48041
13887 49935

Administrative Orders:
Memorandums:
Memorandum of January 13, 2017 (Revoked by Memorandum of September 6, 2019) 48227
Memorandum of September 6, 2019 ..... 48227, 48549
Notices:
Notice of September 10, 2019 48039
Notice of September 12, 2019 48545
Notice of September 19, 2019 49633
Presidential Determinations:
No. 2019–23 of September 13, 2019 49189

5 CFR

532 49941
843 49635
1650 46419
1651 46419

Proposed Rules:
315 48794
432 48794
532 49483
752 48794
2635 50791

6 CFR

37 ..... 46423, 48045

7 CFR

Subtitle A 47405
Subtitle B 47405
54 ..... 48551, 49637
56 49637
70 49637
210 50287
220 50287
226 50287
253 45873
319 49191
460 48518
718 45877
760 48518
810 50293
966 50711
981 50713
1146 46653
1208 49942
1217 50294
1412 45877
1416 48518
1970 49644

Proposed Rules:
Subtitle A 47443
Subtitle B 47443
301 49680
319 49680
923 49682
955 51068
993 49963
3565 45927

8 CFR

Proposed Rules:
103 46040
208 47148

9 CFR

Ch. I 47405
Ch. II 47405
Ch. III 47405

Proposed Rules:
Ch. I 47443
Ch. II 47443
Ch. III 47443

10 CFR

150 51365
430 46661

Proposed Rules:
Ch. I 50791
26 48750
30 47443
40 47443
50 47443
52 47443
60 47443
61 ..... 47443, 48309
63 47443
70 47443
71 47443

72 47443
Ch. II 50791
429 51440
430 ....46469, 46830, 49965, 51440
431 ....48006, 51467
Ch. X 50791
Ch. III 50791
Ch. XIII 50791
Ch. XVII 50791
Ch. XVIII 50791

12 CFR

Ch. X 48229, 48246, 48260
Proposed Rules:
Ch. III 51467
337 46470
611 49684
615 ....49069, 49684
620 49684
621 49684
628 49684
630 49684

13 CFR

Proposed Rules:
120 48807

14 CFR

23 49648
39 ....45895, 46426, 46429, 46432, 46434, 46875, 47406, 47407, 47410, 47875, 47877, 48045, 48047, 48050, 48563, 48783, 49005, 49944, 50301, 50716, 50719, 50721, 50725, 50727, 50730, 50734
71 ....46438, 46877, 47413, 47415, 48052, 49008, 49010, 49011, 49012, 50304
95 48054
97 ....47115, 47116, 47118, 47120
Proposed Rules:
39 ....46496, 46896, 46898, 46900, 46903, 47170, 47173, 47445, 47906, 48083, 48310, 48569, 49484, 49487, 50336, 50339, 51469
71 ....46905, 47909, 48085, 48086, 48572, 50341, 50344, 50346, 50347, 50800, 50804, 51005
121 50349

15 CFR

922 50736
Proposed Rules:
922 45929

16 CFR

1130 49947
1215 49435
1229 46878

17 CFR

41 51005
200 50737
201 50737
229 50737
230 50737
240 50737
241 47416
271 47420
276 47420
Proposed Rules:
3 49071
13 49490
39 ....49071, 49072
140 ....49071, 49072

18 CFR

385 46438
Proposed Rules:
806 48312

19 CFR

12 46676
24 ....46678, 49650
141 46676

20 CFR

401 45900
404 ....49950, 51367
416 51367
655 49439
Proposed Rules:
718 51073

21 CFR

1305 51368
Proposed Rules:
15 47911
101 48809
130 48809
216 46688
1100 50566
1107 50566
1114 50566
1308 48815
1310 48314

23 CFR

635 51023

24 CFR

Proposed Rules:
5 48820
92 48820
93 48820
232 ....48321, 50805
574 48820
960 48820
966 48820
982 48820

26 CFR

1 ....49651, 50108
301 ....46440, 46681
Proposed Rules:
1 ....47175, 47191, 47447, 47455, 50152, 51471
54 51471

28 CFR

Proposed Rules:
16 49073

29 CFR

541 51230
1910 50739
1915 51377
1926 51377
4022 48272
4044 48272
Proposed Rules:
103 49691
4022 ....51490, 51494
4044 51495
4062 51495

30 CFR

56 51400
57 51400
906 46184
Proposed Rules:
56 51075
57 51075
70 51075
71 51075
72 51075
90 51075
935 46703

31 CFR

515 47121
582 46440
Proposed Rules:
50 46907
800 50174
802 50214

32 CFR

88 48274
111 49457
117 47879
312 47880
318 46681
505 46681
806b 46882
881 51401
Proposed Rules:
199 50805

33 CFR

100 ....45901, 46682, 48059, 48274, 48276, 49015, 49193, 51028, 51402
165 ....45903, 45905, 46882, 46883, 46885, 47123, 47427, 47429, 47431, 47880, 48059, 48062, 48064, 48066, 48278, 48281, 48786, 48788, 49017, 49020, 49022, 49194, 49460, 50756, 51031, 51405, 51407, 51409, 51411
Proposed Rules:
165 46498
167 46501
334 48090

34 CFR

Ch. III 47433
668 49788
682 49788
685 49788

36 CFR

Proposed Rules:
251 ....50698, 50703

37 CFR

1 45907
Proposed Rules:
210 49966

39 CFR

Proposed Rules:
3050 50353

40 CFR

9 ....49025, 49040
51 47882
52 ....45910, 45918, 46877, 46889, 46892, 47437, 47884, 47885, 47887, 47889, 47893, 47895, 47897, 48068, 48789, 49057, 49062, 49462, 49465, 49467, 49659, 49661, 49663, 49667, 49670, 49671, 50305, 50758, 50760, 51033, 51055, 51056, 51413, 51416, 51418, 51420
60 ....47882, 49470
61 47882
62 47899
63 47882
70 ....50307, 51418
80 49470
81 ....47895, 47897, 48286, 49467, 51420
85 51310
86 51310
151 46100
180 ....47125, 47130, 47136, 48071, 49195, 49475, 50761, 50764, 51060
271 50766
300 ....46684, 48077, 48565, 49479, 49480, 49481, 49675, 49951, 49952, 49953, 50307
721 ....49025, 49040
Proposed Rules:
52 ....45930, 45931, 47211, 47213, 47216, 47914, 49202, 49492, 49699, 50354, 50363
60 ....49497, 50244
63 ....46138, 46610, 47074, 47346, 48708, 49382, 50660
80 46909
81 ....47216, 49492
191 50367
194 50367
228 49075
281 48573
282 78573
721 47923
751 50809
1042 46909

42 CFR

88 49954
403 51732
405 47494
416 51732
418 51732
424 47494
441 51732
447 50308
455 47494
457 47494
460 51732
482 ....51732, 51836
483 51732
484 ....51732, 51836
485 ....51732, 51836
486 51732
488 51732
491 51732
494 51732
498 47494

44 CFR

64 ....46685, 49676
Proposed Rules:
62 45933

46 CFR

10 47141
Proposed Rules:
11 48842
502 ....45934, 48578

515.....45934, 48578
545.....48850, 50369

47 CFR

1.....50767, 50890
25.....47146
52.....50767
73.....46920, 49677, 51066

Proposed Rules:

1.....50810, 51502
17.....51502
73.....49205
74.....49205

48 CFR

Ch. I.....47860, 47868
1.....47861
2.....47862
4.....47861
9.....47865
13.....47861, 47865
15.....47865
19.....47862
22.....47866
25.....47865, 47866
39.....47861
42.....47865
52.....47861, 47862, 47866
Ch. II.....48508, 48210
App. F.....48510
204.....48510
208.....50785
209.....48507
212.....48507, 48510, 50785
213.....48507, 50785
215.....50785
216.....48510, 50785
217.....48510, 50785
218.....48504
234.....50785
237.....48504, 48510, 50785
239.....48496, 48498
247.....48506
252.....48496, 48498, 48499, 48500, 48501, 48503, 48504, 48506, 48507, 48510
801.....46448
815.....46448
816.....46448
837.....46448
849.....46448
852.....46448
871.....46448

Proposed Rules:

1.....49498
9.....49974
12.....49498, 49502, 49974
13.....49974
25.....49498
29.....49498, 49502
43.....49974
52.....49498, 49502, 49974
206.....50811
210.....50812
212.....50812
215.....50812
227.....48513
229.....48512
234.....50812
252.....48512, 48513
1502.....48856
1512.....48856
1513.....48856
1516.....48856
1532.....48856
1539.....48856
1552.....48856

49 CFR

325.....51427
350.....51427
365.....51427
380.....51427
382.....51427
383.....51427
385.....51427
387.....51427
389.....51427
391.....51427
392.....51427
395.....48077, 51427
396.....51427
531.....51310
533.....51310

Proposed Rules:

382.....46923
383.....45938, 46923
384.....45938, 46923
395.....45940, 49212
571.....48866, 51076
580.....51090
585.....48866
1002.....48872
1011.....48882
1111.....48872, 48882
1114.....48872
1115.....48872

50 CFR

17.....48290
21.....45921
26.....47640
32.....47640
36.....47640
71.....47640
219.....46788
402.....50333
622.....45924, 47902, 50333, 50334, 51435
635.....47440, 48566, 48791
648.....48081, 51438
660.....49960
679.....45295, 46457, 46458, 46686, 47904, 49066, 49678, 50790

Proposed Rules:

17.....46927, 47231, 48090
218.....48388
226.....49214
622.....48890, 50814
635.....45941, 49236, 50814
648.....48899
660.....48094
679.....51092

LIST OF PUBLIC LAWS

This is a continuing list of public bills from the current session of Congress which have become Federal laws. This list is also available online at *http://www.archives.gov/federal-register/laws*.

The text of laws is not published in the **Federal Register** but may be ordered in ''slip law'' (individual pamphlet) form from the Superintendent of Documents, U.S. Government Publishing Office, Washington, DC 20402 (phone, 202–512–1808). The text will also be made available on the Internet from GPO's Federal Digital System (FDsys) at *http://www.gpo.gov/fdsys*. Some laws may not yet be available.

H.R. 831/P.L. 116–57
Reviving America's Scenic Byways Act of 2019 (Sept. 22, 2019; 133 Stat. 1090)

H.R. 1200/P.L. 116–58
Veterans' Compensation Cost-of-Living Adjustment Act of 2019 (Sept. 26, 2019; 133 Stat. 1091)

Last List August 28, 2019

Public Laws Electronic Notification Service (PENS)

PENS is a free electronic mail notification service of newly enacted public laws. To subscribe, go to *http://listserv.gsa.gov/archives/publaws-l.html*

Note: This service is strictly for E-mail notification of new laws. The text of laws is not available through this service. **PENS** cannot respond to specific inquiries sent to this address.