AUTHENTICATED
U.S. GOVERNMENT
INFORMATION
GPO

FEDERAL REGISTER

Vol. 84 Tuesday,
No. 117 June 18, 2019

Pages 28171–28428

OFFICE OF THE FEDERAL REGISTER

The **FEDERAL REGISTER** (ISSN 0097–6326) is published daily, Monday through Friday, except official holidays, by the Office of the Federal Register, National Archives and Records Administration, under the Federal Register Act (44 U.S.C. Ch. 15) and the regulations of the Administrative Committee of the Federal Register (1 CFR Ch. I). The Superintendent of Documents, U.S. Government Publishing Office, is the exclusive distributor of the official edition. Periodicals postage is paid at Washington, DC.

The **FEDERAL REGISTER** provides a uniform system for making available to the public regulations and legal notices issued by Federal agencies. These include Presidential proclamations and Executive Orders, Federal agency documents having general applicability and legal effect, documents required to be published by act of Congress, and other Federal agency documents of public interest.

Documents are on file for public inspection in the Office of the Federal Register the day before they are published, unless the issuing agency requests earlier filing. For a list of documents currently on file for public inspection, see *www.federalregister.gov.*

The seal of the National Archives and Records Administration authenticates the Federal Register as the official serial publication established under the Federal Register Act. Under 44 U.S.C. 1507, the contents of the **Federal Register** shall be judicially noticed.

The **Federal Register** is published in paper and on 24x microfiche. It is also available online at no charge at *www.govinfo.gov*, a service of the U.S. Government Publishing Office.

The online edition of the **Federal Register** is issued under the authority of the Administrative Committee of the Federal Register as the official legal equivalent of the paper and microfiche editions (44 U.S.C. 4101 and 1 CFR 5.10). It is updated by 6:00 a.m. each day the **Federal Register** is published and includes both text and graphics from Volume 1, 1 (March 14, 1936) forward. For more information, contact the GPO Customer Contact Center, U.S. Government Publishing Office. Phone 202-512-1800 or 866-512-1800 (toll free). E-mail, *gpocusthelp.com.*

The annual subscription price for the **Federal Register** paper edition is $860 plus postage, or $929, for a combined **Federal Register, Federal Register** Index and List of CFR Sections Affected (LSA) subscription; the microfiche edition of the **Federal Register** including the **Federal Register** Index and LSA is $330, plus postage. Six month subscriptions are available for one-half the annual rate. The prevailing postal rates will be applied to orders according to the delivery method requested. The price of a single copy of the daily **Federal Register,** including postage, is based on the number of pages: $11 for an issue containing less than 200 pages; $22 for an issue containing 200 to 400 pages; and $33 for an issue containing more than 400 pages. Single issues of the microfiche edition may be purchased for $3 per copy, including postage. Remit check or money order, made payable to the Superintendent of Documents, or charge to your GPO Deposit Account, VISA, MasterCard, American Express, or Discover. Mail to: U.S. Government Publishing Office—New Orders, P.O. Box 979050, St. Louis, MO 63197-9000; or call toll free 1-866-512-1800, DC area 202-512-1800; or go to the U.S. Government Online Bookstore site, see *bookstore.gpo.gov.*

There are no restrictions on the republication of material appearing in the **Federal Register.**

How To Cite This Publication: Use the volume number and the page number. Example: 84 FR 12345.

Postmaster: Send address changes to the Superintendent of Documents, Federal Register, U.S. Government Publishing Office, Washington, DC 20402, along with the entire mailing label from the last issue received.

SUBSCRIPTIONS AND COPIES

PUBLIC

Subscriptions:

Paper or fiche	**202–512–1800**
Assistance with public subscriptions	**202–512–1806**

General online information **202–512–1530; 1–888–293–6498**

Single copies/back copies:

Paper or fiche	**202–512–1800**
Assistance with public single copies	**1–866–512–1800 (Toll-Free)**

FEDERAL AGENCIES

Subscriptions:

Assistance with Federal agency subscriptions:

Email	*FRSubscriptions@nara.gov*
Phone	**202–741–6000**

The Federal Register Printing Savings Act of 2017 (Pub. L. 115-120) placed restrictions on distribution of official printed copies of the daily **Federal Register** to members of Congress and Federal offices. Under this Act, the Director of the Government Publishing Office may not provide printed copies of the daily **Federal Register** unless a Member or other Federal office requests a specific issue or a subscription to the print edition. For more information on how to subscribe use the following website link: *https://www.gpo.gov/frsubs.*

Printed on recycled paper.

Contents

Federal Register

Vol. 84, No. 117

Tuesday, June 18, 2019

Agriculture Department
See Animal and Plant Health Inspection Service
See Commodity Credit Corporation
See Farm Service Agency
See Food and Nutrition Service
See Rural Utilities Service

Animal and Plant Health Inspection Service
RULES
Scrapie in Sheep and Goats; Correction, 28202

Census Bureau
NOTICES
Agency Information Collection Activities; Proposals, Submissions, and Approvals, 28267

Centers for Medicare & Medicaid Services
PROPOSED RULES
Medicare Program:
Hospital Inpatient Prospective Payment Systems for Acute Care Hospitals and the Long Term Care Hospital Prospective Payment System and Proposed Policy Changes and Fiscal Year 2020 Rates; Proposed Quality Reporting Requirements for Specific Providers; Medicare and Medicaid Promoting Interoperability Programs Proposed Requirements for Eligible Hospitals and Critical Access Hospitals; Correction, 28263–28264

Children and Families Administration
NOTICES
Agency Information Collection Activities; Proposals, Submissions, and Approvals, 28304
Agency Information Collection Activities; Proposals, Submissions, and Approvals:
Assessing the Implementation and Cost of High Quality Early Care and Education: Field Test, 28305–28306
Child Care and Development Fund Tribal Annual Report, 28305
Formative Data Collections for ACF Program Support, 28307–28308
Individualizing and Connecting Families to Family Support Services, 28303–28304
Survey of Head Start Grantees on Training and Technical Assistance, 28306–28307

Coast Guard
RULES
Safety Zone:
Blazing Paddles, Cuyahoga River, Cleveland, OH, 28221–28223
Creative Day Technologies Mackinac Island Fireworks, Mackinac Island, MI, 28219–28221
Harbor Beach Fireworks, Lake Huron, MI, 28225–28227
Missouri River, Mile Markers 0 - 738.4, St. Louis, MO to Sioux City, IA, 28223–28225
Special Local Regulation:
Rock the River Toledo, Maumee River, Toledo, OH, 28216–28219

Commerce Department
See Census Bureau
See Foreign-Trade Zones Board
See International Trade Administration
See National Oceanic and Atmospheric Administration

Commodity Credit Corporation
RULES
Dairy Margin Coverage Program and Dairy Indemnity Payment Program, 28171–28185
Export Credit Guarantee Program and Facility Guarantee Program Certifications, 28185–28186

Consumer Product Safety Commission
RULES
Safety Standard for Stationary Activity Centers, 28205–28212

Corporation for National and Community Service
NOTICES
Agency Information Collection Activities; Proposals, Submissions, and Approvals:
Application Package for National Service Trust AmeriCorps Voucher and Payment Request Form/National Service Trust AmeriCorps—Manual Payment Request Form, 28284–28285

Defense Acquisition Regulations System
NOTICES
Agency Information Collection Activities; Proposals, Submissions, and Approvals:
Defense Federal Acquisition Regulation Supplement, 28285

Defense Department
See Defense Acquisition Regulations System
NOTICES
Agency Information Collection Activities; Proposals, Submissions, and Approvals:
Reporting of Nonconforming Items to the Government-Industry Data Exchange Program, 28302–28303
Arms Sales, 28285–28291

Drug Enforcement Administration
RULES
Schedules of Controlled Substances:
Placement of Thiafentanil in Schedule II, 28212–28214

Employment and Training Administration
NOTICES
Agency Information Collection Activities; Proposals, Submissions, and Approvals:
Collection for Contractor and Grantee Information Gathering, 28336–28337

Energy Department
See Federal Energy Regulatory Commission
PROPOSED RULES
Energy Conservation Program:
Energy Conservation Standards for Distribution Transformers, 28239–28259
NOTICES
Meetings:
International Energy Agency, 28291–28292

Environmental Protection Agency
RULES
Tolerance Exemption:
Bacillus amyloliquefaciens subspecies plantarum strain FZB42, 28235–28237
PROPOSED RULES
National Oil and Hazardous Substances Pollution Contingency Plan; National Priorities List:
Deletion of the MGM Brakes Superfund Site, 28259–28263

Farm Service Agency
RULES
Dairy Margin Coverage Program and Dairy Indemnity Payment Program, 28171–28185

Federal Aviation Administration
RULES
Airworthiness Directives:
CFM International S.A. Turbofan Engines, 28202–28205

Federal Communications Commission
PROPOSED RULES
IP CTS Order Hamilton Petition for Reconsideration, 28264–28265
NOTICES
Radio Broadcasting Services:
AM or FM Proposals To Change The Community of License, 28299

Federal Election Commission
NOTICES
Meetings; Sunshine Act, 28299–28300

Federal Emergency Management Agency
NOTICES
Emergency Declaration:
Florida; Amendment No. 2, 28325
Kansas; Amendment No. 1, 28322–28323
Kansas; Amendment No. 2, 28314
Flood Hazard Determinations; Changes, 28317–28321
Flood Hazard Determinations; Proposals, 28311–28312
Major Disaster and Related Determinations:
California, 28316, 28325–28326
Missouri, 28316–28317
Montana, 28322
Navajo Nation, 28314–28315
Oregon, 28313–28314
Major Disaster Declaration:
Alabama; Amendment No. 1, 28312–28313
Cahuilla Band of Indians; Amendment No. 1, 28325
Florida; Amendment No. 10, 28324
Florida; Amendment No. 17, 28313
Florida; Amendment No. 9, 28317
Iowa; Amendment No. 4, 28323
Iowa; Amendment No. 5, 28310–28311
Iowa; Amendment No. 6, 28315
Iowa; Amendment No. 7, 28322
Iowa; Amendment No. 8, 28317
Iowa; Amendment No. 9, 28313
Kentucky; Amendment No. 1, 28315–28316
Kentucky; Amendment No. 2, 28311
La Jolla Band of Luiseno Indians; Amendment No. 1, 28323–28324
Mississippi; Amendment No. 2, 28324–28325
Nebraska; Amendment No. 6, 28311
Soboba Band of Luiseno Indians; Amendment No. 1, 28323
Tennessee; Amendment No. 1, 28315
Washington; Amendment No. 1, 28324

Federal Energy Regulatory Commission
NOTICES
Application:
Florida Gas Transmission Co., LLC, 28298–28299
Combined Filings, 28296–28297
Complaint:
Gunvor USA, LLC vs. Colonial Pipeline Co., 28298
Kansas Corporation Commission vs. ITC Great Plains, LLC, 28292
Environmental Impact Statements; Availability, etc.:
Enable Gulf Run Transmission, LLC and Enable Gas Transmission, LLC; Gulf Run and Line CP Modifications Project, 28293–28296
Request under Blanket Authorization:
American Midstream (AlaTenn), LLC, 28297–28298
Stingray Pipeline Company, LLC, 28292–28293

Federal Housing Finance Agency
RULES
Uniform Mortgage-Backed Security; Correction, 28202

Federal Reserve System
NOTICES
Formations of, Acquisitions by, and Mergers of Bank Holding Companies, 28300
Privacy Act; System of Records, 28300–28302

Federal Transit Administration
NOTICES
Agency Information Collection Activities; Proposals, Submissions, and Approvals, 28382–28384

Fish and Wildlife Service
NOTICES
Permit Applications:
Foreign Endangered Species, 28332–28333

Food and Nutrition Service
NOTICES
Meetings:
2020 Dietary Guidelines Advisory Committee, 28266–28267

Foreign Assets Control Office
NOTICES
Blocking or Unblocking of Persons and Properties, 28395

Foreign-Trade Zones Board
NOTICES
Application for Subzone:
San Juan, Puerto Rico; HP International Trading B.V. (Puerto Rico Branch), LLC; Aguadilla, Puerto Rico, 28268
San Juan, Puerto Rico; Puerto Rico Wood Treating Industries, Inc. Carolina, Puerto Rico, 28268

General Services Administration
NOTICES
Agency Information Collection Activities; Proposals, Submissions, and Approvals:
Reporting of Nonconforming Items to the Government-Industry Data Exchange Program, 28302–28303

Health and Human Services Department
See Centers for Medicare & Medicaid Services

See Children and Families Administration
See Health Resources and Services Administration
See Substance Abuse and Mental Health Services Administration

Health Resources and Services Administration
NOTICES
Agency Information Collection Activities; Proposals, Submissions, and Approvals:
340B Drug Pricing Program Reporting Requirements, 28308–28309
Appointments:
Senior Executive Service Performance Review Board, 28310

Homeland Security Department
See Coast Guard
See Federal Emergency Management Agency
NOTICES
Privacy Act; System of Records, 28326–28332

Interior Department
See Fish and Wildlife Service
See Land Management Bureau

Internal Revenue Service
RULES
Electing Small Business Trusts with Nonresident Aliens as Potential Current Beneficiaries, 28214–28216
Limitation on Deduction for Dividends Received from Certain Foreign Corporations and Amounts Eligible for Section 954 Look-Through Exception, 28398–28424
PROPOSED RULES
Limitation on Deduction for Dividends Received from Certain Foreign Corporations and Amounts Eligible for Section 954 Look-Through Exception, 28426–28427

International Trade Administration
NOTICES
Antidumping or Countervailing Duty Investigations, Orders, or Reviews:
Certain Steel Nails from the Republic of Korea, 28278–28281
Freshwater Crawfish Tail Meat from the People's Republic of China: Final Results of Antidumping Duty New Shipper Review; 2017–2018, 28268–28269
Hydrofluorocarbon Blends from the People's Republic of China; Components, 28273–28276
Hydrofluorocarbon Blends from the People's Republic of China; Unfinished Blends, 28276–28278
Hydrofluorocarbon Blends from the People's Republic of China; Third-Country Blends Containing Chinese Components, 28269–28272
Hydrofluorocarbon Blends from the People's Republic of China; Unpatented R–421A, 28281–28284
Determination of Sales at Less Than Fair Value:
Strontium Chromate from Austria, 28272–28273

International Trade Commission
NOTICES
Investigations; Determinations, Modifications, and Rulings, etc.:
Carburetors and Products Containing Such Carburetors, 28334–28335
Certain Food Processing Equipment and Packaging Materials Thereof, 28335–28336

Justice Department
See Drug Enforcement Administration
NOTICES
Agency Information Collection Activities; Proposals, Submissions, and Approvals:
Law Enforcement Officers Killed and Assaulted, 28336

Labor Department
See Employment and Training Administration

Land Management Bureau
NOTICES
Plats of Survey:
Eastern States, 28334

National Aeronautics and Space Administration
NOTICES
Agency Information Collection Activities; Proposals, Submissions, and Approvals:
Reporting of Nonconforming Items to the Government-Industry Data Exchange Program, 28302–28303

National Credit Union Administration
NOTICES
Agency Information Collection Activities; Proposals, Submissions, and Approvals:
Personnel Security Processing Form, 28337–28338

National Highway Traffic Safety Administration
NOTICES
Petition for Inconsequentiality; Consolidation:
General Motors, LLC, 28384–28386

National Oceanic and Atmospheric Administration
RULES
Fisheries of the Exclusive Economic Zone off Alaska:
Reallocation of Pollock in the Bering Sea and Aleutian Islands, 28237–28238

National Science Foundation
NOTICES
Request for Information:
Update to Strategic Computing Objectives, 28338–28339

Nuclear Regulatory Commission
NOTICES
Applications and Amendments to Facility Operating Licenses and Combined Licenses Involving No Significant Hazards Considerations, 28339–28352
Environmental Assessments; Availability, etc.:
Holtec Decommissioning International, LLC; Oyster Creek Nuclear Generating Station, 28357–28360
Exemption; Issuance:
Exelon Generation Company LLC; Oyster Creek Nuclear Generating Station, 28352–28357
Meetings; Sunshine Act, 28360

Postal Service
NOTICES
Product Change:
Priority Mail and First-Class Package Service Negotiated Service Agreement, 28360
Priority Mail Negotiated Service Agreement, 28361

Rural Utilities Service
RULES
Standards and Specifications for Timber Products Acceptable for Use by Rural Utilities Service Electric and Telecommunications Borrowers, 28186–28201

Securities and Exchange Commission
NOTICES
Agency Information Collection Activities; Proposals, Submissions, and Approvals, 28361, 28363, 28366, 28372, 28381–28382
Application:
Axonic Alternative Income Fund and Axonic Capital LLC, 28375–28379
Pioneer ETF Series Trust I, et al., 28361–28363
Vertical Capital Income Fund and Oakline Advisors, LLC, 28374–28375
Wahed Invest LLC, et al., 28366–28368
Self-Regulatory Organizations; Proposed Rule Changes:
Cboe EDGX Exchange, Inc., 28363–28366
Financial Industry Regulatory Authority, Inc., 28371–28372
ICE Clear Europe Ltd., 28372–28374
The Nasdaq Stock Market, LLC, 28379–28381
The Options Clearing Corp., 28368–28371

Substance Abuse and Mental Health Services Administration

NOTICES
Meetings:
National Advisory Council, 28310

Transportation Department
See Federal Aviation Administration
See Federal Transit Administration
See National Highway Traffic Safety Administration
NOTICES
Funding Opportunity:
Port Infrastructure Development Program under the Consolidated Appropriations Act, 28386–28395

Treasury Department
See Foreign Assets Control Office
See Internal Revenue Service

Veterans Affairs Department
RULES
Schedule for Rating Disabilities:
Infectious Diseases, Immune Disorders, and Nutritional Deficiencies, 28227–28235
NOTICES
Agency Information Collection Activities; Proposals, Submissions, and Approvals:
VA Fiduciary's Account, Court Appointed Fiduciary's Account, and Certificate of Balance on Deposit and Authorization to Disclose Financial Records, 28395–28396

Separate Parts In This Issue

Part II
Treasury Department, Internal Revenue Service, 28398–28424

Part III
Treasury Department, Internal Revenue Service, 28426–28427

Reader Aids
Consult the Reader Aids section at the end of this issue for phone numbers, online resources, finding aids, and notice of recently enacted public laws.

To subscribe to the Federal Register Table of Contents electronic mailing list, go to https://public.govdelivery.com/accounts/USGPOOFR/subscriber/new, enter your e-mail address, then follow the instructions to join, leave, or manage your subscription.

CFR PARTS AFFECTED IN THIS ISSUE

A cumulative list of the parts affected this month can be found in the Reader Aids section at the end of this issue.

7 CFR
760 28171
1430 28171
1493 28185
1728 28186
1755 28186

9 CFR
79 28202

10 CFR
Proposed Rules:
431 28239

12 CFR
1248 28202

14 CFR
39 28202

16 CFR
1112 28205
1238 28205

21 CFR
1301 28212
1305 28212
1308 28212

26 CFR
1 (2 documents) 28214, 28398
Proposed Rules:
1 28426

33 CFR
100 28216
165 (4 documents) 28219, 28221, 28223, 28225

38 CFR
4 28227

40 CFR
180 28235
Proposed Rules:
300 28259

42 CFR
Proposed Rules:
412 28263
413 28263
495 28263

47 CFR
Proposed Rules:
64 28264

50 CFR
679 28237

Rules and Regulations

Federal Register
Vol. 84, No. 117
Tuesday, June 18, 2019

This section of the FEDERAL REGISTER contains regulatory documents having general applicability and legal effect, most of which are keyed to and codified in the Code of Federal Regulations, which is published under 50 titles pursuant to 44 U.S.C. 1510.

The Code of Federal Regulations is sold by the Superintendent of Documents.

DEPARTMENT OF AGRICULTURE

Farm Service Agency

7 CFR Part 760

Commodity Credit Corporation

7 CFR Part 1430

[Docket No. CCC–2019–0004]

RIN 0560–A137

Dairy Margin Coverage Program and Dairy Indemnity Payment Program

AGENCY: Commodity Credit Corporation and Farm Service Agency, USDA.

ACTION: Final rule.

SUMMARY: This final rule implements the requirements of the dairy programs administered by the Farm Service Agency (FSA) on behalf of the Commodity Credit Corporation (CCC). The Dairy Margin Coverage (DMC) Program, as authorized by the Agriculture Improvement Act of 2018 (2018 Farm Bill), replaces the Margin Protection Program (MPP-Dairy) for dairy producers and retains much of the structure of MPP-Dairy. DMC is a margin-based support program for dairy producers that provides risk management coverage that will pay producers when the difference between the national price of milk and the national estimated cost of feed (the margin) falls below a certain level. The rule also extends the Dairy Indemnity Payment Program (DIPP) through 2023 and amends the regulations to incorporate a specific period of time for which claims for the same loss will be eligible for indemnification under DIPP.

DATES: Effective June 18, 2019.

FOR FURTHER INFORMATION CONTACT: Danielle Cooke, telephone: (202) 720–1919; email: *Danielle.Cooke@wdc.usda.gov.* Persons with disabilities who require alternative means for communication should contact the USDA Target Center at (202) 720–2600 (voice).

SUPPLEMENTARY INFORMATION:

Background

The 2018 Farm Bill (Pub. L. 115–334) reauthorized DIPP and requires establishment of regulations for the DMC Program. The changes for each of the programs are explained below.

DIPP

Section 1402 of the 2018 Farm Bill amends 7 U.S.C. 4553 to reauthorize DIPP through 2023, and does not make any other changes to DIPP.

The purpose of DIPP is to indemnify dairy farmers and manufacturers of dairy products who, through no fault of their own, suffer income losses with respect to milk or milk products that were removed from commercial markets because such milk or milk products contained certain harmful pesticide residues, chemicals, or toxic substances, or were contaminated by nuclear radiation or fallout.

This rule is adding a specific timeframe that will limit the period of time that a dairy claimant under DIPP is eligible to receive indemnification. This is a discretionary change. Current DIPP rules indemnify losses until such time as the dairy is reinstated to the commercial market by a State regulatory agency. The large majority of claims for indemnification to affected farmers under DIPP typically range from 2 to 10 days for which their milk has been removed from the commercial market before such milk has been reinstated by a State regulatory agency. However, some claims submitted for indemnification could span the course of several months. In these circumstances, FSA will limit indemnification for the same loss to a period not to exceed 18 months. The current regulation does not have a limit on the time period for which an eligible dairy can receive DIPP payments for the same contaminating event. Accordingly, discretionary changes are being made to DIPP to limit indemnification to not extend past the time period that the impacted dairy cows in the dairy herd are no longer lactating or impacted dairy cows in gestation have delivered a calf and are no longer lactating from its most immediately preceding birth after the contaminating event, not to exceed 18 months. Claims for milk from the affected farmer not reinstated to the commercial markets after the impacted dairy cows in the herd are dry and no longer producing milk from its most immediately preceding birth after the contaminating event, or have exceeded the 18-month period will not be eligible for indemnification for their milk any further, in order to prevent continued indemnification to an affected farmer for the removal of milk based upon the same contaminating event, however long that contaminating event or activity lasts. The 18-month period is based on a 10-month lactation period after the calf is born, overlapping breeding period, and a remaining 6-month pregnancy term. The 18-month period also accounts for approximately 2 months of the 18-month period the cow may not be producing milk during the dry period between lactations. At any time when the impacted dairy cows are dry from lactating from its most immediately preceding birth after the contaminating event the occurrence will no longer be eligible for indemnification. Limiting indemnification of a contaminating event to the maximum 18-month period, during which such dairy cow could be affected, was determined a fair and reasonable time frame to limit claims. Otherwise, any indemnification payment beyond this specified time period would be for milk from cows that have already completed the gestation period prior to the contaminating event and lactation period following birth, or from cows that were conceived after the initial contaminating event that caused the milk to be removed from the market. Once the dairy is required to remove their milk from the commercial market, such dairy producer knows or has reason to know the presence of contamination and it is reasonable that such dairy should take such actions as to not allow their cows to be further exposed to such contamination. Claimants will be required to provide inventory of dairy cows bred and lactating as of the contamination event to determine eligible livestock producing milk during the contamination period for which DIPP assistance is provided. Further, once the contaminating event has occurred and the dairy has been directed to remove their milk from the commercial market, any subsequently purchased or bred animals are not eligible for assistance

under DIPP. The limitation will prevent a claimant from receiving indemnification in perpetuity for the same contaminating event. Therefore, this rule specifies a timeframe for which dairies are eligible to be indemnified for the same contaminating event or activity under DIPP. Dairy producers that have exceeded the specified timeframe established by FSA before June 18, 2019 will be allowed to submit one additional claim after June 18, 2019, since this new provision is being implemented as of June 18, 2019 and some producers may have already exceeded the specified timeframe.

DMC Program and MPP-Dairy

This rule establishes a new subpart in the regulations in 7 CFR part 1430 to establish the new DMC Program for dairy producers as authorized by Subtitle D of Title I of the 2018 Farm Bill. The DMC Program regulation is in effect from June 18, 2019, through December 31, 2023; however, the DMC Program is retroactive back to January 1, 2019, as specified in the 2018 Farm Bill.

DMC replaces MPP-Dairy (7 CFR part 1430 subpart A). The 2018 Farm Bill authorizes retroactive provisions that open eligibility for certain producers previously determined ineligible under MPP-Dairy and for MPP-Dairy participants when the total premiums paid exceeded the total payments received during each of the applicable years of MPP-Dairy. This rule amends the MPP-Dairy regulations to make these changes. MPP-Dairy will only remain in effect until retroactive provisions have been administered and concluded.

The DMC Program is based on a similar framework to MPP-Dairy, with some changes. The purpose of DMC is to provide eligible dairy producers risk protection against low margins resulting from a combination of low milk prices and high feed costs. DMC and MPP-Dairy both provide for payments to dairy operations that are calculated based on producer elected margins when the difference between the national ''all-milk'' price of milk and the national average cost of feed falls below that producer elected margin. However, revisions were made, including changes to premium rates, additional coverage levels, and a premium discount option for locking in coverage levels for a 5-year period. FSA will announce the date on which the DMC Program registration will begin. Under the 2018 Farm Bill, the DMC Program ends December 31, 2023.

The 2018 Farm Bill expands on the modifications made to MPP-Dairy by the Bipartisan Budget Act of 2018. DMC is a voluntary program for producers involving fees and coverage-based premiums at most levels that provides payments when the calculated national margin for a month falls below the producer's selected margin trigger. The ''margin'' is the difference between the average national price of one hundred pounds (cwt) of milk and the national average price of the feed components (corn, soymeal, and hay) needed to produce that milk. For example, if the average price of milk is $20.00 a cwt and the average cost of soybean meal, corn, and hay needed to produce that milk is $12.00 a cwt, the margin is $8.00 a cwt. A factored hay price determined by FSA by averaging the prices of ''premium and supreme'' alfalfa hay and conventional alfalfa hay will be used in the feed cost calculations for DMC. Section 1401(c) of the 2018 Farm Bill required the National Agricultural Statistics Service to revise monthly price survey reports to include prices for high-quality (premium and supreme) alfalfa hay in the top 5 milk producing states and to publish that data no later than 120 days after passage of the 2018 Farm Bill. There is no mandate for USDA to use that data in the DMC feed cost calculation. However, there are indications that this higher quality alfalfa hay price would better reflect the quality of hay purchased by dairy operations. Since not all dairy producers feed high quality hay, a factored price, which assumes that 50 percent of alfalfa hay that is fed to dairy cows is ''premium and supreme,'' will more closely reflect the prices paid by dairy producers.

As authorized by the 2018 Farm Bill, DMC is available for participating dairy operations. A dairy operation can have one or more producers and each of the producers on the operation must share in the risk of production, and must contribute capital, land, labor, equipment, or management to the operation commensurate with their share of the proceeds. However, all producers do not have to participate. Producer payments and premiums will be reduced according to the non-participating producer's percentage share in the dairy operation. However, all participating producers in the dairy operation must unanimously agree to the elected coverage levels and any non-participating producers from that same dairy operation cannot independently or separately apply for DMC.

The production history for each dairy operation will be established in the same manner as MPP-Dairy, using the highest of the operation's annual milk marketings in any one of 2011, 2012, or 2013 calendar years. Under DMC, dairy operations that were not in operation prior to January 1, 2014, and have more than 1 year of production history but have not previously established a production history under MPP-Dairy, will establish production history from annual milk marketings during any 1 calendar year, as specified in this rule. However, dairy operations with less than a full calendar year of production history will establish production history using the same options established in MPP-Dairy, based on either an extrapolation from actual production data for the first calendar year with at least 1 full month of production history, adjusted for a seasonality index, or by estimating annual production based on the herd size of the dairy operation relative to the national rolling herd average production data.

For DMC, the production history, once established for an operation, does not change, even for changes in the herd size of the dairy operation. MPP-Dairy previously allowed for an annual upward adjustment to established production history that was based on the national annual increase in milk production. However, under DMC, production history will be adjusted only for 2019 for certain dairies to reflect any increase in the national average milk production relative to calendar year 2017. FSA determined the national average milk production relative to calendar year 2017 based on the milk production history increase from April 2016 through March 2017 and applied that adjustment at a factor of 1.0186 to participating dairy operations under MPP-Dairy for coverage year 2018. Dairy operations participating in DMC that had production history previously established under MPP-Dairy but elected not to participate in MPP-Dairy are not eligible for the production history adjustment. Additionally, dairy operations that first participated in MPP-Dairy in 2018, are not eligible for a production history adjustment and will maintain that same production history. However, dairy operations that did not previously establish their production history for the purpose of MPP-Dairy and, consequently did not participate in MPP-Dairy, will have the same adjustment factor of 1.0186 applied to their established production history upon registration in the DMC Program. However, unlike in MPP-Dairy, no additional production history adjustments will be made to the established production history in subsequent years of participation in DMC, per changes made by the 2018 Farm Bill.

Provisions regarding production history remain largely unchanged from MPP-Dairy to DMC. The production

history is established for the participating dairy operation, and is assigned to that operation, not to an individual producer or to the facility location.

The 2018 Farm Bill does not permit a producer to adjust the proportion of their share of the dairy operation for the production history that is covered by the premium rate schedule in Tier I and Tier II, from what is covered for the dairy operation. For example, a participating dairy operation with two equal partners, each with a 50 percent ownership share in a 20 million pound production history that elects 60 percent coverage (20,000,000 × 60% = 12,000,000) under DMC, must cover the full 12,000,000 pounds, as applicable in the premium rate schedules. If one partner in that operation decides not to participate, the participating partner is not allowed to only cover their 50 percent share of the production history, 10 million pounds in this example, at the 60 percent election.

In some instances for MPP-Dairy, production history was tied to the facility location if the dairy operation was under a lease agreement. As such, transfers of production history to a different location and successions-in-interest of production history to another owner were not allowed. Similarly, when transfers were allowed for a relocation of the dairy operation from another facility location of a dairy operation that previously had MPP-Dairy established production history, the relocating dairy operation was allowed to merge the two histories together.

Under new DMC provisions, that in effect untie the production history from the facility location, the dairy operation, regardless of who established the production history, will be allowed to transfer the production history to another dairy operation, as specified by FSA, when there is no relative break in the continuity in the operation of the dairy being transferred. FSA has determined that based on its experience in administering MPP-Dairy that production history of a dairy operation should remain with the operation rather than with the facility because production is naturally tied to the animals that produce the dairy, not the facility; therefore, production should move with the dairy operation that established the production history. Although not a provision required by the 2018 Farm Bill, the provisions for transferring production histories will be implemented using FSA's discretionary authority to untie production history from the facility location in all cases as specified in this rule.

The DMC Program eligibility requirements remain the same as MPP-Dairy, except that producers that participate in the Livestock Gross Margin for Dairy (LGM-Dairy) insurance program administered by the USDA Risk Management Agency (RMA) on behalf of the Federal Crop Insurance Corporation, who under MPP-Dairy could only participate in either LGM-Dairy or MPP-Dairy, are now eligible to receive benefits from both LGM-Dairy and the DMC Program, as specified by the 2018 Farm Bill.

The 2018 Farm Bill also authorizes those producers with LGM-Dairy coverage in 2018, who were previously ineligible to enroll for MPP-Dairy coverage, the ability to retroactively enroll in MPP-Dairy for 2018. FSA has announced a period for eligible LGM-Dairy producers to make application and retroactive 2018 coverage elections to qualify for the payments that triggered in 2018 during the months of February through August and also December (no other months resulted in MPP-Dairy payments). The retroactive 2018 MPP-Dairy signup is only for dairy producers with 2018 LGM-Dairy coverage who produced and commercially marketed milk in 2018 but did not obtain full year MPP-Dairy coverage. FSA will notify eligible producers of the retroactive application signup period.

The 2018 Farm Bill makes significant changes from MPP-Dairy to DMC in the area of coverage levels. Both the previous MPP-Dairy and the new DMC Program require the dairy operation to select a margin trigger and a percentage of production history that will be covered. Coverage level thresholds under MPP-Dairy ranged from $4 per cwt for basic catastrophic (CAT) level coverage to an $8 per cwt maximum, in 50 cent increments. A dairy operation could elect coverage on anywhere from 25 percent to 90 percent of the operation's established production history. Under DMC, CAT level coverage remains at $4, however, higher levels of coverage at the $8.50, $9.00, and $9.50 threshold levels have been added under Tier I. Tier II coverage level thresholds under DMC remain the same as those under MPP-Dairy ranging from $4 to $8 and at the same $0.50 increments. However, the percentage of production history that can be covered also changed. Under MPP-Dairy, coverage was available from 25 percent to 90 percent, in 5 percent increments, whereas under DMC, coverage is available from 5 percent up to 95 percent, in 5 percent increments.

MPP-Dairy required producers to select one margin trigger level and one percentage of production history for both Tier I and Tier II, however, the new DMC Program allows for a second election of a coverage level threshold in Tier II that can be different than what the dairy operation elects under Tier I, but only if the DMC participating dairy operation elects a Tier I coverage level threshold of $8.50, $9.00, or $9.50. For example, a dairy operation with a 12 million pound production history elects to cover 50 percent of the operations' production history, which is 6 million pounds in this example. The dairy operation can cover 5 million pounds at $9.00, then can elect to cover 1 million pounds under Tier II at the $5 margin trigger, or any other level in Tier II, from $4 to $8. This option was not previously available under MPP-Dairy and only allows for a second election of a coverage level threshold, not a different coverage percentage, as specified in this rule.

As part of the annual coverage election process, the dairy operation is required to select the levels of coverage and pay an administrative fee, unless waived for a qualifying exemption, and if applicable, pay a premium based on the level of coverage (margin trigger) elected. Premium rates have changed from MPP-Dairy to DMC. The annual premium rates are specified in the 2018 Farm Bill. The premium for each participating dairy operation will be determined based on the dairy operation's election of each of the margin trigger and percentage of coverage. The method to calculate the premium due for participating dairy operations selecting coverage above CAT level, are the same in MPP-Dairy and the new DMC Program, and must be paid by a date determined by FSA, as specified in this rule.

For DMC, just as in MPP-Dairy, the coverage level threshold and coverage percentage must be elected by the dairy operation during the annual coverage election period announced by FSA for the applicable coverage year. MPP-Dairy required producers to make annual coverage elections and participate in the program for the duration of the 2014 Farm Bill. However, under DMC, annual participation is not mandatory. A dairy operation can decide annually during the coverage election period for the applicable year of coverage if they would like to participate.

To be eligible for DMC, a dairy operation must be in the business of producing and commercially marketing milk at the time of application during each annual coverage election period. Because section 1401(m) of the 2018 Farm Bill requires that the DMC Program take effect on January 1, 2019,

for the 2019 coverage year only, those dairy operations that have stopped producing and commercially marketing milk before the coverage election signup period for 2019 begins, may apply for 2019 coverage and applicable payments for only the months the operation was still producing and commercially marketing milk in 2019. These dairy operations are not eligible for the premium rate discount, however, premiums will be prorated based on the months such dairy was in operation for 2019, as such the last marketing statement for the dairy operation, or other documentation deemed appropriate by FSA will be required at the time of application.

Payment of a $100 administrative fee is still required under DMC for each year of participation, unless the dairy operation qualifies for a waiver exemption based on the dairy operations qualifying status for socially disadvantaged, limited resource, beginning farmer or rancher, and veteran farmer or rancher.

DMC also provides an option during the 2019 coverage election period to make a 1-time election of coverage level and percentage of coverage, ''locking-in'' those elections for a 5-year period beginning January 2019 and ending December 2023. After the 2019 coverage election period, the lock-in option is not available to dairy operations participating in DMC, except as specified for dairy operations that have not established a production history. All dairy operations that elect the lock-in option are required to participate in the DMC Program at the same elected premium coverage levels for a 5-year period beginning in January 2019. DMC participating dairy operations locking in elections for the 5-year period will receive a premium discount of 25 percent off the premium rate per cwt in each applicable Tier table. For example, a dairy operation elects to lock-in coverage levels at $7 and 70 percent (5.6 million pounds) of the operation's 8 million pound production history. The applicable premium rate for a $7 margin trigger is $0.08 per cwt, discounted by 25 percent of the applicable premium rate will be $0.06, for the first 5 million pounds covered under Tier I (50,000 cwt × $0.06 = $3,000 premium). Likewise, in Tier II, the applicable premium rate for a $7 margin trigger is $1.107, discounted by 25 percent, the applicable premium rate of $0.83025 per cwt will be applied to the remainder of the covered pounds (5,600,000 − 5,000,000 = 600,000) above 5 million pounds that fall under Tier II (6,000 cwt × $0.83025 = $4,981.50). Therefore, in this example, the dairy operation will pay the same premium for each coverage year 2019 through 2023, in the amount of $7,981.50 (Tier I $3,000 + Tier II $4,981.50).

New dairy operations will be eligible for the premium rate discount for locking in coverage for the period beginning with the first available calendar year and ending in December 2023. Operations that are determined to be ''new dairy operations'' under this rule are dairy operations that have never established a production history under MPP-Dairy, and have begun producing and commercially marketing milk within 60 calendar days prior to registering to participate in DMC.

If there are producers in an operation that want to be considered new and are also part of another dairy operation participating in DMC, FSA must determine that the dairy operation is separate and distinct from the other DMC participating dairy operation. Under MPP-Dairy, separate participation by a new dairy operation that was purchased or acquired was subject to an affiliation test, however, under DMC, the affiliation test will no longer apply. The 2018 Farm Bill specifies that the Secretary may not make DMC payments to a dairy operation that is determined by FSA to have reorganized the structure of such operation for the sole purpose of qualifying as a new dairy operation.

Section 1407(f) of the 2014 Farm Bill, as amended by Section 1401(i) of the 2018 Farm Bill, specifies that dairy operations that participated in MPP-Dairy during any of calendar years 2014 through 2017 that submit an application on an approved form may receive a repayment in an amount equal to the difference between the total amount of premiums paid by the dairy operation for each applicable calendar year of coverage and the total amount of payments made to the MPP-Dairy participating dairy operation for that applicable calendar year. Coverage years that result in payments that exceeded premiums paid for that coverage year will yield a $0 calculation for that calendar year. The 2018 Farm Bill further specifies that a dairy operation that is eligible to receive the calculated repayment must elect to receive the repayment in either an amount that is equal to:

(1) 75 percent of the calculated repayment as a credit that may be used by the dairy operation towards DMC premiums; or

(2) 50 percent of the calculated repayment as a direct cash repayment.

FSA will determine the calculated repayment amounts for each year for each dairy operation that participated in MPP-Dairy. Adequate proof must be provided by the dairy operation, to the satisfaction of FSA, for any repayment amounts calculated by FSA under dispute. FSA will specify the time and manner to make a MPP-Dairy repayment request.

Once the choice of cash or credit is made by the dairy operation and approved by FSA, that choice cannot be changed. Dairy operations that elect the credit option can only use that credit in the DMC Program. If the entire credit is not used, for any reason, it cannot be applied as credit to any other USDA program and will have zero cash value and cannot be redeemed for any purpose.

Both cash and credit elections may be transferred to a dairy operation that succeeded to the dairy operation through a succession-in-interest transfer under MPP-Dairy and the successor is currently participating in DMC. Otherwise, the repayment election is not transferrable.

Dairy operations that give up their right to elect a premium repayment option or do not timely make application on a form specified by FSA are not eligible to receive a cash or credit benefit for premiums paid under MPP-Dairy.

Dairy operations eligible for the MPP-Dairy premium that elect the cash repayment option will have cash repayments issued in the same name as the entity that participated in the MPP-Dairy.

This rule includes provisions for MPP-Dairy in 7 CFR part 1430, subpart D, specifically to allow eligibility for LGM-Dairy producers for 2018 and allow for the MPP-Dairy premium repayments. These two provisions are the final actions for MPP-Dairy.

Effective Date, Notice and Comment, and Paperwork Reduction Act

As specified in 7 U.S.C. 9091, the regulations to implement the provisions of Title I and the administration of Title I of the 2018 Farm Bill are exempt from:

- The Paperwork Reduction Act (44 U.S.C. chapter 35), and
- The notice and comment provisions of 5 U.S.C. 553.

In addition, 7 U.S.C. 9091(c)(3) directs the Secretary to use the authority provided in 5 U.S.C. 808, which provides that when an agency finds for good cause that notice and public procedure are impracticable, unnecessary, or contrary to the public interest, that the rule may take effect at such time as the agency determines. Due to the nature of the rule, the mandatory requirements of the 2018 Farm Bill, and the need to implement the dairy

regulations expeditiously to provide assistance to dairy producers, FSA and CCC find that notice and public procedure are contrary to the public interest. Therefore, even though this rule is a major rule for purposes of the Congressional Review Act of 1996, FSA and CCC are not required to delay the effective date for 60 days from the date of publication to allow for Congressional review. Therefore, this rule is effective on the date of publication in the **Federal Register.**

Executive Orders 12866, 13563, 13771 and 13777

Executive Order 12866, ''Regulatory Planning and Review,'' and Executive Order 13563, ''Improving Regulation and Regulatory Review,'' direct agencies to assess all costs and benefits of available regulatory alternatives and, if regulation is necessary, to select regulatory approaches that maximize net benefits (including potential economic, environmental, public health and safety effects, distributive impacts, and equity). Executive Order 13563 emphasized the importance of quantifying both costs and benefits, of reducing costs, of harmonizing rules, and of promoting flexibility. Executive Order 13777, ''Enforcing the Regulatory Reform Agenda,'' established a federal policy to alleviate unnecessary regulatory burdens on the American people.

The Office of Management and Budget (OMB) designated this rule as economically significant under Executive Order 12866, ''Regulatory Planning and Review,'' and therefore, OMB has reviewed this rule. The costs and benefits of this rule are summarized below. The full cost benefit analysis is available on *regulations.gov.*

As a transfer rule, per OMB guidance, this rule is not covered by Executive Order 13371, ''Reducing Regulation and Controlling Regulatory Costs.''

Summary of Economic Impacts

DMC provides a greater subsidized margin protection to producers compared to the expired MPP-Dairy, which is expected to lead to greater participation. DMC expands options for dairy operations to buy higher coverage for margins up to $9.50 per cwt, at incremental premium increases of $0.50 per cwt. The coverage limit under MPP-Dairy was $8.00 per cwt. In addition, the premium structure of the DMC Program favors high coverage levels for Tier I production history. Further, dairy operations are now able to cover as little as 5 percent of their production history compared to 25 percent minimum for MPP-Dairy. Dairy operations are allowed to participate concurrently in DMC and Livestock Gross Margin Insurance for Dairy (LGM-Dairy), which also has the potential to increase DMC participation. Finally, operations that were excluded from participating in MPP-Dairy during 2018 because they were participating in LGM-Dairy can sign up for 2018 MPP-Dairy coverage retroactively.

As a result of these changes, payments to producers from DMC are expected to be greater than for MPP-Dairy. USDA projections as of early 2019 indicate that, over the 10-year baseline period, DMC payments will be triggered frequently. With national feed costs expected to average about $9.14 over the life of the DMC Program, margins are expected to average $8.50 per cwt through 2023, even as milk prices recover from 2018 lows. DMC payments are less likely to trigger in the second half of the baseline period, 2024–2029, assuming lower feed prices and higher milk prices bring annual average margins near $10.29 per cwt.

Stochastic modelling results indicate that DMC would trigger significant outlays under current baseline projections. Allowing variation around the means for milk prices and feed ingredient costs in a stochastic model generates annual gross estimates averaging to $1.3 billion per year and collection of $89 million per year in fees and premiums paid by dairy program participants. For the 5-year life of the DMC Program, net expenditures through 2023 are projected to average $1.2 billion annually.

Regulatory Flexibility Act

The Regulatory Flexibility Act (5 U.S.C. 601–612), as amended by Small Business Regulatory Enforcement Fairness Act, generally requires an agency to prepare a regulatory flexibility analysis of any rule whenever an agency is required by the Administrative Procedure Act or any other law to publish a proposed rule, unless the agency certifies that the rule will not have a significant economic impact on a substantial number of small entities. This rule is not subject to the Regulatory Flexibility Act because FSA and CCC are not required by any law to publish a proposed rule for this rulemaking initiative.

Environmental Review

The environmental impacts of this final rule have been considered in a manner consistent with the provisions of the National Environmental Policy Act (NEPA, 42 U.S.C. 4321–4347), the regulations of the Council on Environmental Quality (40 CFR parts 1500–1508), and the FSA regulations for compliance with NEPA (7 CFR part 799). FSA has determined that the provisions identified in this final rule are administrative in nature, intended to clarify the mandatory requirements of the programs, as defined in the 2018 Farm Bill, and do not constitute a major Federal action that would significantly affect the quality of the human environment, individually or cumulatively. The few discretionary features of the rules include establishing deadlines, determinations of eligibility and prices, and have been selected largely based on pre-existing USDA programs and continuation with clarification of duration of existing indemnifiation payments. Accordingly, these discretionary aspects are covered by the Categorical Exclusion, in § 799.31(b)(6)(iii), that applies to price support programs, and no Extraordinary Circumstances (§ 799.33) exist. Therefore, as this rule presents only administrative clarifications of mandatory requirements, FSA will not prepare an environmental assessment or environmental impact statement for this regulatory action; this rule serves as documentation of the programmatic environmental compliance decision for this federal action.

Executive Order 12372

Executive Order 12372, ''Intergovernmental Review of Federal Programs,'' requires consultation with State and local officials that would be directly affected by proposed Federal financial assistance. The objectives of the Executive Order are to foster an intergovernmental partnership and a strengthened Federalism, by relying on State and local processes for State and local government coordination and review of proposed federal financial assistance and direct federal development. For reasons specified in the final rule related notice regarding 7 CFR part 3015, subpart V (48 FR 29115, June 24, 1983), the programs and activities in this rule are excluded from the scope of Executive Order 12372.

Executive Order 12988

This rule has been reviewed under Executive Order 12988, ''Civil Justice Reform.'' This rule will not preempt State or local laws, regulations, or policies unless they represent an irreconcilable conflict with this rule. This rule has retroactive effect for MPP-Dairy for calendar year 2018. Also, coverage for dairy operations that register during the 2019 re-enrollment period will be retroactive to January 1, 2019. Before any judicial actions may be brought regarding the provisions of this

rule, the administrative appeal provisions of 7 CFR parts 11 and 780 are to be exhausted.

Executive Order 13132

This rule has been reviewed under Executive Order 13132, ''Federalism.'' The policies contained in this rule do not have any substantial direct effect on States, on the relationship between the Federal Government and the States, or on the distribution of power and responsibilities among the various levels of government, except as required by law. Nor does this rule impose substantial direct compliance costs on State and local governments. Therefore, consultation with the States is not required.

Executive Order 13175

This rule has been reviewed in accordance with the requirements of Executive Order 13175, ''Consultation and Coordination with Indian Tribal Governments.'' Executive Order 13175 requires federal agencies to consult and coordinate with Tribes on a government-to-government basis on policies that have Tribal implications, including regulations, legislative comments or proposed legislation, and other policy statements or actions that have substantial direct effects on one or more Indian Tribes, on the relationship between the Federal Government and Indian Tribes or on the distribution of power and responsibilities between the Federal Government and Indian Tribes.

The USDA's Office of Tribal Relations (OTR) has assessed the impact of this rule on Indian Tribes and determined that this rule has Tribal implications that required Tribal consultation under Executive Order 13175. Tribal consultation for this rule was included in the 2018 Farm Bill Tribal consultation held on May 1, 2019, at the National Museum of the American Indian, in Washington, DC. The portion of the Tribal consultation relative to this rule was conducted by Bill Northey, USDA Under Secretary for the Farm Production and Conservation mission area, as part of the Title I session. There were no specific comments from Tribes on the dairy rule during the Tribal consultation. If a Tribe requests additional consultation, FSA will work with OTR to ensure meaningful consultation is provided where changes, additions, and modifications identified in this rule are not expressly mandated by legislation.

Unfunded Mandates

Title II of the Unfunded Mandates Reform Act of 1995 (UMRA, Pub. L. 104–4) requires federal agencies to assess the effects of their regulatory actions of State, local, or Tribal governments or the private sector. Agencies generally must prepare a written statement, including cost benefits analysis, for proposed and final rules with federal mandates that may result in expenditures of $100 million or more in any 1 year for State, local or Tribal governments, in the aggregate, or to the private sector. UMRA generally requires agencies to consider alternatives and adopt the more cost effective or least burdensome alternative that achieves the objectives of the rule. This rule contains no federal mandates as defined by Title II of UMRA for State, local, or Tribal governments, or the private sector. In addition, CCC is not required to publish a notice of proposed rulemaking for this rule. Therefore, this rule is not subject to the requirements of sections 202 and 205 of UMRA.

Federal Assistance Programs

The titles and numbers of the Federal assistance programs in the Catalog of Federal Domestic Assistance to which this rule applies are:

10.053—Dairy Indemnity Program
10.116—Margin Protection Program-Dairy
10.127—Dairy Margin Coverage Program

E-Government Act Compliance

CCC and FSA are committed to complying with the E-Government Act, to promote the use of the internet and other information technologies to provide increased opportunities for citizen access to Government information and services, and for other purposes.

List of Subjects

7 CFR Part 760

Dairy products, Indemnity payments, Reporting and recordkeeping requirements.

7 CFR Part 1430

Dairy products, Fraud, Penalties, Reporting and recordkeeping requirements.

For the reasons discussed above, FSA and CCC amend the regulations in 7 CFR parts 760 and 1430 as follows:

PART 760—INDEMNITY PAYMENT PROGRAMS

Subpart A—Dairy Indemnity Payment Program

■ 1. Revise the authority citation for part 760 to read as follows:

Authority: 7 U.S.C. 4551—4553.

■ 2. Amend § 760.2 as follows:

■ a. Remove the alphabetical paragraph designations, and arrange the definitions in alphabetical order; and

■ b. Add a definition for ''Same loss'' in alphabetical order;

The addition reads as follows:

§ 760.2 Definitions.

* * * * *

Same loss means the event or trigger that caused the milk to be removed from the commercial market. For example, if milk is contaminated, the original cause of the contamination was the trigger and any loss related to that contamination would be considered the same loss.

* * * * *

■ 3. In § 760.9, add paragraph (c) to read as follows:

§ 760.9 Other legal recourse.

* * * * *

(c) The period eligible for DIPP benefits for the same loss may not extend past the time period that the impacted dairy cows in the dairy herd are no longer lactating or impacted dairy cows in gestation have delivered a calf and are no longer lactating from its most immediately preceding birth after the contaminating event, not to exceed 18 months. Claims for milk from the affected farmer not reinstated to the commercial markets after the impacted dairy cows in the herd are dry and no longer producing milk from its most immediately preceding birth after the contaminating event, or have exceeded the 18-month period will not be compensated any further. Dairy producers that have exceeded the specified period established by FSA before June 18, 2018 will be allowed to submit one additional claim. Dairy cows purchased or bred after the occurrence of the contaminating event may not be included in the claim for benefits.

PART 1430—DAIRY PRODUCTS

■ 4. The authority citation for part 1430 is revised to read as follows:

Authority: 7 U.S.C. 9051–9060, and 15 U.S.C. 714B and 714c.

■ 5. Add subpart D, consisting of §§ 1430.400 through 1430.425, to read as follows:

Subpart D—Dairy Margin Coverage Program

Sec.

1430.400 Purpose.
1430.401 Administration.
1430.402 Definitions.
1430.403 Eligible dairy operations.
1430.404 Time and method of registration and annual election.
1430.405 Establishment and transfer of production history for a participating dairy operation.

1430.406 Administrative fees.
1430.407 Buy-up coverage.
1430.408 MPP-Dairy premium repayments.
1430.409 Dairy margin coverage payments.
1430.410 Effect of failure to pay administrative fees or premiums.
1430.411 Calculation of average feed cost and actual dairy production margin.
1430.412 Relation to RMA's LGM-Dairy Program.
1430.413 Multi-year contract for lock-in option.
1430.414 Contract modifications.
1430.415 Reconstitutions.
1430.416 Offsets and withholdings.
1430.417 Assignments.
1430.418 Appeals.
1430.419 Misrepresentation and scheme or device.
1430.420 Estates, trusts, and minors.
1430.421 Death, incompetency, or disappearance.
1430.422 Maintenance and inspection of records.
1430.423 Refunds; joint and several liability.
1430.424 Violations of highly erodible and wetland conservation provisions.
1430.425 Violations regarding controlled substances.

§ 1430.400 Purpose.

The regulations in this subpart apply to the Dairy Margin Coverage (DMC) Program that replaces the Margin Protection Program for Dairy (MPP-Dairy) in subpart A. The purpose of DMC is to provide eligible dairy producers risk protection against low margins resulting from a combination of low milk prices and high feed costs.

§ 1430.401 Administration.

(a) The DMC Program is administered by the Farm Service Agency (FSA) under the general supervision of the Executive Vice President, CCC, or a designee, and will be carried out by FSA State and county committees and employees.

(b) FSA State and county committees, and their employees may not waive or modify any requirement of this subpart, except as provided in paragraph (e) of this section.

(c) The State committee will take any action required when not taken by the county committee, require correction of actions not in compliance, or require the withholding of any action that is not in compliance with this subpart.

(d) The Executive Vice President, CCC, or a designee, may determine any question arising under the program or reverse or modify any decision of the State or county committee.

(e) The Deputy Administrator, Farm Programs, FSA, may waive or modify non-statutory program deadlines when failure to meet such deadline does not adversely affect the operation of the DMC Program.

(f) A representative of CCC may execute a contract for participation in the DMC Program and related documents under the terms and conditions determined and announced by the Deputy Administrator on behalf of CCC. Any document not under such terms and conditions, including any purported execution before the date authorized by CCC, will be null and void.

§ 1430.402 Definitions.

The definitions in this section apply for all purposes of administering the DMC Program.

Actual dairy production margin means the difference between the all-milk price and the average feed cost, as calculated under § 1430.411. If the calculation would produce a negative number, the margin is considered to be zero.

Administrative county office means the county FSA office designated to make determinations, handle official records, and issue payments for the producer in accordance with 7 CFR part 718.

All-milk price means the national average price received, per hundredweight of milk, by dairy operations for all milk sold to dairy plants and milk dealers in the United States, as determined by the Secretary.

AMS means the Agricultural Marketing Service of USDA.

Annual election period for DMC means the period, each calendar year, established by the Deputy Administrator, for a dairy operation to register to participate in DMC for the following coverage year, pay associated administrative fees, and make coverage elections for an applicable calendar year.

Average feed cost means the national average cost of feed used by a dairy operation to produce a hundredweight of milk, as determined under the provisions of this subpart.

Beginning farmer or rancher means an individual or entity who has both not operated a farm or ranch, or who has operated a farm or ranch for not more than 10 consecutive years; and materially and substantially participates in the operation of the farm or ranch. For legal entities to be considered a beginning farmer or rancher, all members must be related by blood or marriage; and all the members must be beginning farmers or ranchers.

Buy up coverage means dairy margin coverage for a margin protection level above $4 per hundredweight of milk.

Calendar year means the year beginning with January 1 and ending the following December 31.

Catastrophic level coverage means $4 per cwt margin protection coverage and a coverage percentage of 95 percent, with no premium assessed.

CCC means the Commodity Credit Corporation of USDA.

Commercially marketed means selling whole milk to either the market to which the dairy operation normally delivers or other similar markets and receives monetary compensation.

Contract means the terms and conditions to participate in the DMC Program as executed on a form prescribed by CCC and required to be completed by the producers in the dairy operation and accepted by CCC, including any contract modifications made in an annual election period before coverage for the applicable calendar year commences.

Covered production history is equal to the production history of the operation multiplied by the coverage percentage selected by the participating dairy operation.

County committee means the FSA county committee.

County office means the FSA office responsible for administering FSA programs for farms located in a specific area in a state.

Dairy margin coverage (or DMC) means the dairy margin coverage program for dairy producers established under this subpart.

Dairy margin coverage payment (DMC payment) means a payment made to a participating dairy operation under the DMC Program under the terms of this subpart.

Dairy operation means, as determined by the Deputy Administrator, and subject to conditions that the Deputy Administrator may impose to advance the achievement of the purposes of the DMC Program, any one or more dairy producers that produce and market milk commercially produced from cows as a single unit in which each dairy producer:

(1) Shares in the pooling of resources under a common ownership structure;

(2) Is at risk in the production of milk in the dairy operation;

(3) Contributes land, labor, management, equipment, or capital to the dairy operation that are at least commensurate to the producer's share in the operation; and

(4) Has production facilities located in the United States.

Deputy Administrator means the Deputy Administrator for Farm Programs, Farm Service Agency, or designee.

Farm Service Agency or FSA means the Farm Service Agency of USDA.

Handler or producer handler means the initial individual or entity making

payment to a dairy operation for milk produced in the United States and marketed for commercial use.

Hundredweight or *cwt* means 100 pounds.

Limited resource farmer or rancher means a farmer or rancher that is a person with both:

(1) Direct or indirect gross farm sales not more than an amount determined by FSA in each of the previous 2 years; and

(2) A total household income at or below the national poverty level for a family of four or less than 50 percent of county median household income in each of the previous 2 years.

Milk Income Loss Contract Program or *MILC* means the program established under section 1506 of the Food, Conservation, and Energy Act of 2008 (7 U.S.C. 8773) and the regulations in part 1430, subpart B of this part.

Milk marketing means a sale of milk for which there is a verifiable production record for milk commercially marketed.

NASS means the National Agricultural Statistics Service of USDA.

New operation means a dairy operation that:

(1) Did not establish a production history under the MPP-Dairy;

(2) Has less than 12 full months in a calendar year of commercial milk marketings produced by the dairy operation; and

(3) Started commercially marketing milk within 60 days of submitting a contract application under DMC.

Open enrollment period for DMC means the period, each calendar year, established by the Deputy Administrator, for a participating dairy operation to either register to participate in the DMC Program, pay associated administrative fees, if applicable, and applicable premiums, or to make annual coverage elections for an applicable calendar year of participation.

Participating dairy operation means a dairy operation that signs up to participate in the DMC Program under this part.

Producer means any individual, group of individuals, partnership, corporation, estate, trust, association, cooperative, or other business enterprise or other legal entity who is, or whose members are, a citizen of, or legal resident alien in the United States, and who directly, or indirectly:

(1) Shares in the risk of producing milk, and

(2) Makes contributions including land, labor, management, equipment, or capital:

(i) To the dairy operation at least commensurate to the producer's share of the operation, or

(ii) To the dairy operation of the individual or entity, as determined by the Deputy Administrator.

Production history means the production history determined for a participating dairy operation under this subpart when the participating dairy operation first registers to participate in DMC or previously established under MPP-Dairy, as determined under the provisions of this subpart.

RMA means the Risk Management Agency of USDA.

Secretary means the Secretary of USDA.

Socially disadvantaged farmer or rancher means a farmer or rancher who is a member of a group whose members have been subject to racial, ethnic, or gender prejudice because of their identity as members of a group without regard to their individual qualities. Groups include: American Indians or Alaskan Natives, Asians or Asian Americans, Blacks or African Americans, Native Hawaiians or other Pacific Islanders, Hispanics, and women. For legal entities requesting to be considered Socially Disadvantaged, the majority interest must be held by socially disadvantaged individuals.

United States means, unless the context suggests otherwise, the 50 States of the United States of America, the District of Columbia, American Samoa, Guam, the Commonwealth of the Northern Mariana Islands, the Commonwealth of Puerto Rico, the Virgin Islands of the United States, and any other territory or possession of the United States.

USDA means the U.S. Department of Agriculture.

Verifiable production records means evidence that is used to substantiate the amount of production marketed and that can be verified by CCC through an independent source.

Veteran farmer or rancher means a person who has served in the United States Army, Navy, Marine Corps, Air Force, and Coast Guard, including the reserve components, and who has not operated a farm or ranch; has operated a farm or ranch but not for more than 10 years total, since becoming a veteran; or has obtained status as a veteran during the most recent 10-year period. A legal entity or joint operation will be considered a veteran farmer or rancher entity, if all members meet this definition.

§ 1430.403 Eligible dairy operations.

(a) In order for a dairy operation to be eligible to register for DMC and receive payments, such dairy operation must:

(1) Produce milk from cows in the United States that is marketed commercially at the time of each annual election for an applicable coverage year in DMC, except that dairy operations that have stopped producing and marketing milk in any month before or during the annual coverage election period for 2019 are eligible for only those applicable months;

(2) Submit accurate and complete information as required by this subpart;

(3) Provide proof of milk production marketed commercially by all persons in the dairy operation to establish production history;

(4) Pay required administrative fees for participation in DMC as specified in this subpart and any premiums, if applicable, as specified in this subpart.

(b) A person or entity covered by § 1400.401 of this chapter (hereafter ''foreign person'') must meet the eligibility requirements in that section to receive payments under this subpart. A dairy operation with ineligible foreign persons as members will have any payment reduced by the proportional share of such members.

(c) Federal agencies and States, including all agencies and political subdivisions of a State, are not eligible for payments under this subpart.

(d) A single dairy operation operated by more than one dairy producer will be treated as a single dairy operation for purposes of participating in DMC and can only submit one application. If a producer owns more than one eligible dairy operation in which each operation is separate and distinct from each other, such dairy producer may be eligible to participate separately for each dairy operation, however, each eligible dairy operation must be separately registered, as specified in § 1430.404.

(e) The Deputy Administrator or designee will determine additional dairy operations that operate in a manner that are separate and distinct from each other according to paragraph (d) of this section and which may, as determined by the Deputy Administrator, be considered an operation even though they may not meet the conditions otherwise imposed in this definition. Also, the Deputy Administrator may require operations to be combined and considered one operation when there is close interest by family or otherwise between two operations, to avoid schemes or devices, or otherwise. Likewise, the Deputy Administrator may consider other factors as are deemed appropriate to adjust what is considered a dairy operation to conform with the DMC Program requirements in an equitable manner, including taking into account a dairy's status under MPP-Dairy and the

Milk Income Loss Contract Program formerly operated under this part.

§ 1430.404 Time and method of registration and annual election.

(a) A dairy operation may register to participate in DMC by establishing a production history according to § 1430.405 on a form prescribed by CCC and also submitting a contract prescribed by CCC. Dairy operations may obtain a contract in person, by mail, or by facsimile from any county office. In addition, dairy operations may download a copy of the forms at *http://www.sc.egov.usda.gov.*

(b) A dairy operation must submit completed contracts and any other supporting documentation, during the annual election period established by the Deputy Administrator, to the administrative county FSA office serving the dairy operation. However, the production history must be established only once and approved by CCC before the contract is submitted and considered complete.

(1) A new dairy operation that has been established after the most recent election period is required to submit a contract within the first 60 calendar days from the date of which the dairy operation first commercially markets milk and may elect coverage that begins the month and day the dairy operation has commercial marketings.

(2) A new dairy operation that does not meet the 60-day requirement of paragraph (b)(1) of this section cannot enroll until the next annual election period for coverage for the following calendar year.

(c) Annual contracts with coverage elections are to be submitted in time to be received at FSA by the close of business on the last day of the annual election period, established by the Deputy Administrator.

(1) The applicable year of coverage for contracts received during an annual election period will be the following calendar year, except for 2019, where the election and coverage year will be the same, or unless otherwise specified by the Deputy Administrator for Farm Programs. Coverage for dairy operations that register during the 2019 election period will be retroactive to January 1, 2019.

(2) Annual contracts with coverage elections submitted after the applicable allowed time for submission will not be considered.

(d) If the dairy producer operates more than one separate and distinct operation, the producer must register each operation for each operation to be eligible for coverage. If the producer moves the same herd of cattle between two facilities, then the two facilities will not be regarded as separate and distinct but as one operation unless the Deputy Administrator determines otherwise. A separate operation must distinctly, as a single unit, have their own cattle, facilities, milk marketings, tanks, feed, records, State level licenses, and permits. All new dairy operations that did not participate in MPP-Dairy must meet all the requirements of this paragraph. A participating dairy operation in business prior to January 1, 2019, that participated in MPP-Dairy will automatically be determined as a ''dairy operation'' for DMC Program purposes in the same manner as under MPP-Dairy. In disputes regarding separate dairy operations the Deputy Administrator will determine what is a separate and distinct operation and that decision will be final. A dairy operation operated by more than one dairy producer will be treated as a single dairy operation for purposes of participating in DMC and may only, submit one contract. Only participating dairy operations enrolling using contract forms approved by CCC will be covered by the DMC Program.

(e) A participating dairy operation must elect, during the applicable annual election period and by using the form prescribed by CCC, the coverage level threshold and coverage percentage for that participating dairy operation for the applicable calendar year:

(1) Once the registration for a calendar year of coverage is submitted and approved by CCC, coverage for subsequent years does not automatically carry forward. For each calendar year, a dairy operation that decides to participate in DMC must register for a calendar year of coverage according to this paragraph (e) during the applicable coverage election period, except as described in paragraph (e)(2) of this section;

(2) During the 2019 annual coverage election period only, participating dairy operations that make a one-time election of coverage level and percentage of coverage, according to § 1430.407(j), will be locked in at the same coverage level and percentage of coverage for a 5-year period beginning January 1, 2019, and ending December 31, 2023. Dairy operations that elect the lock-in option are required to pay the annual administrative fee and submit an annual contract during the annual contract election period for each coverage year to certify that the dairy operation is still in the business of producing and commercially marketing milk. If the operation fails to pay the applicable administrative fees or certify the status of the dairy operation, the dairy operation will remain obligated for all applicable unpaid administrative and premium fees calculated for that 5-year period.

(3) All participating producers in the participating dairy operation must agree to the coverage level threshold and coverage percentage elected by the operation on the contract. Producers in the participating dairy operation that elect not to participate may not submit a separate contract for coverage. All producers that share in risk of the dairy operations production must be indicated on the contract with their corresponding share in the dairy operation, however, a signature from the non-participating member will not be required for CCC approval.

(f) By registering to participate or receive payment under DMC, all participating producers in the dairy operation must certify to the accuracy and truthfulness of the information in their applications and supporting documentation.

(1) All participating producers who share in the risk of a dairy operation's production must sign and certify all submissions made under DMC that relate to the level of coverage and marketed production for the dairy operation.

(2) All information provided is subject to verification by FSA. FSA may require a dairy operation to provide documentation that supports all verifiable records. Furnishing the information is voluntary; however, without such information DMC Program benefits will not be approved. Providing a false certification to the Federal Government may be punishable by imprisonment, fines, and other penalties or sanctions.

(g) At the time the completed contract is submitted to FSA for the first program year in which the operation is to participate in DMC, the dairy operation must also submit a separate form, as prescribed by CCC, to establish the production history for the dairy operation. An established production history and a completed contract are both required to have a complete submission that is subject to approval by FSA. Production histories established for dairy operations under MPP-Dairy will be used in the DMC Program. A new production history will only be established for new dairy operations that did not participate in MPP-Dairy.

§ 1430.405 Establishment and transfer of production history for a participating dairy operation.

(a) Except as provided in paragraphs (b) and (c) of this section, FSA will

establish the production history for a dairy operation for DMC as the highest annual milk marketings of the participating dairy operation during any one of the 2011, 2012, or 2013 calendar years.

(1) Producers in the participating dairy operation are required to provide adequate proof of the dairy operation's quantity of milk commercially marketed, to establish the production history for the dairy operation.

(2) All information provided is subject to verification, spot check, and audit by FSA. If the dairy operation does not provide, to the satisfaction of FSA, documentation requested to substantiate the production history of the highest annual milk marketings for the participating dairy operation, then the registration will not be approved.

(b) A participating dairy operation that was not in operation prior to January 1, 2014, that has not established a production history will elect the highest annual milk marketings during any one calendar year while in operation to determine the production history of the participating dairy operation.

(c) A participating dairy operation with less than one year of production history will be considered a new dairy operation. To establish the production history for such a new dairy operation the new dairy operation is required to elect one of the following methods:

(1) The volume of the actual milk marketings for the months the dairy operation has been in operation, extrapolated to a yearly amount based on a national seasonally adjusted index, as determined by the Deputy Administrator, to account for differences in milk production during the year; or

(2) An estimate of the actual milk marketings of the dairy operation based on the herd size of the dairy operation relative to the national rolling herd average data published by the Secretary.

(d) If FSA determines that the new enterprise was formed for the purpose of circumventing DMC provisions, including, but not limited to, reconstituting a dairy operation to receive additional benefits, or establishing new production history, that enterprise will not be considered a new dairy operation for the purpose of establishing production history.

(e) Once the production history of a participating dairy operation is established under paragraph (a), (b), or (c) of this section, the production history will be adjusted by a one-time upward adjustment by FSA to reflect any increase in the national average milk production relative to calendar year 2017, as determined by the Deputy Administrator. Dairy operations participating in DMC, that had production history previously established under MPP-Dairy but elected not to participate in MPP-Dairy are not eligible for the production history adjustment. Dairy operations with approved contracts for 2018 coverage under MPP-Dairy will maintain that same production history, as in the DMC Program and are not eligible for the production history adjustment. New dairy operations that participate in DMC, that did not previously have their production history established nor participate in MPP-Dairy, will have the same adjustment factor of 1.0186 applied to their established production history for registration in the DMC Program as 2018 MPP-Dairy participants. There will be no further adjustments in subsequent years of participation made to the established production history under the DMC Program.

(f) The production history must be transferred from one dairy facility to another as follows:

(1) Producers of a dairy operation relocate the dairy operation to another location and the production history of the original operation must be transferred to the new location and subject to the same elected coverage levels for that year; or

(2) Producers of a dairy operation transfer ownership of a dairy operation with its associated production history through a succession-in-interest transfer when there is a spouse, child, heir, or common member that the dairy operation is being transferred to and there is no break in the continuity of the dairy operation. However, the successor operation must submit a separate registration according to § 1430.404, to participate in DMC, but will be subject to the same elected coverage levels made by the predecessor for that coverage year or lock-in period, as applicable.

(g) If CCC waives the obligation, under DMC of a participating dairy operation due to death or retirement of the producer or of the permanent dissolution of the dairy operation or under other circumstances as determined by the Deputy Administrator, FSA may reestablish the production history.

(h) The established production history of a participating dairy operation may be adjusted upward once during the term of the contract for an intergenerational transfer based on the purchase of additional cows by the new family member(s). The increase in the established production history of the participating dairy operation will be determined on the basis of the national rolling herd average data for the current year in effect at the time of the intergenerational transfer and the quantity of the production history increase will be limited to an amount not more than 5 million pounds. The additional quantity of production history will receive coverage at the same elected coverage threshold and coverage percentage in effect for the participating dairy operation at the time the production history increase takes effect. Intergenerational transfers will not be allowed if the participating dairy operation's current annual production and the increase in herd size by the new member(s) is less than the operation's established production history.

(1) The dairy operation must notify FSA, using the appropriate CCC form(s), of the intergenerational transfer within 60 days of the purchase of the cows, except that for purchases made for intergenerational transfers occurring in 2019 before the 2019 annual coverage election period, the dairy operation must notify FSA during the registration and annual coverage election period for coverage year 2019, established by the Deputy Administrator. The operation has the option of the additional production history taking effect beginning with the month the producer first began to commercially produce and market milk as part of the dairy operation, or the following January 1. If the additional production history takes effect between January 1 and August 31, the premium is due September 1, as specified in § 1430.407(h)(2). If the additional production history takes effect between September 1 and December 31, the premium is due immediately.

(2) All of the items specified in this paragraph must be documented in the notification to FSA and self-certified by the current and new member(s) for the intergenerational transfer to be considered eligible for additional production history. All of the following information is subject to verification by CCC. Refusal to allow CCC or any other agency of USDA to verify any information provided will result in disapproval of the intergenerational transfer.

(i) Documentation that the new member(s) joining the operation has purchased the dairy cows being added to the dairy operation;

(ii) Certification that each new member will have a share of the profits or losses from the dairy operation commensurate with such person's contributions to the dairy operation;

(iii) Certification that each new member has a significant equity ownership in the participating dairy operation at levels determined by the Deputy Administrator and announced on the FSA website, *www.fsa.usda.gov;*

(iv) Certification that each new member is a lineal descendant or spouse of a current member of the participating dairy operation;

(v) Agreement that each new member will contribute labor in the dairy operation at a minimum of 35 hours per week or have a plan for transition to full-time, subject to FSA county committee review and approval, if only working seasonally or part-time;

(vi) Certification that the dairy operation will be the principal source of non-investment earned income for each new member; and

(vii) Documentation of the participating dairy operation's current annual marketings as of the date of the intergenerational transfer.

§ 1430.406 Administrative fees.

(a) Except as provided in paragraph (e) of this section, dairy operations must pay an administrative fee to CCC in the amount of $100 at the time of enrollment during the annual election period for each applicable coverage year the dairy operation decides to participate in DMC. Annual administrative fees are due and payable to CCC through the administrative county FSA office no later than the close of business on the last day of the annual election period established by the Deputy Administrator for each applicable calendar year of dairy margin coverage under DMC. The administrative fee paid is non-refundable.

(b) The required annual administrative fee is per dairy operation. Therefore, multiple dairy producers in a single participating dairy operation are required to pay only one annual administrative fee for the participating dairy operation. Conversely, in the case of a dairy producer that operates more than one dairy operation, each participating dairy operation is required to pay a separate administrative fee annually.

(c) Dairy operations that lock-in coverage according to § 1430.407(j), are required to pay the administrative fee each year through 2023, except as provided in paragraph (e) in this section.

(d) Failure to pay the administrative fee timely will result in loss of dairy margin coverage for the applicable calendar year.

(e) A limited resource, beginning, veteran, or socially disadvantaged farmer or rancher, as defined in § 1430.402, will be exempt from paying the administrative fee in this section. The administrative fee waiver for the DMC Program for socially disadvantaged, beginning, and limited resource farmers and ranchers must be requested on a form specified by FSA and must accompany the contract application for coverage under this part in the administrative county FSA office.

§ 1430.407 Buy-up coverage.

(a) For purposes of receiving buy-up dairy margin coverage, a participating dairy operation may annually elect, except as provided by paragraph (i) of this section, during an annual election period the following for the succeeding calendar year:

(1) A coverage level threshold for margins that, per cwt, is equal to one of the following: $4.50, $5, $5.50, $6, $6.50, $7, $7.50, $8, $8.50. $9, or $9.50; and

(2) A percentage of coverage for the production history from 5 percent to 95 percent, in 5 percent increments.

(b) In the absence of any such election, the applicable coverage level provided, with no premium due, is catastrophic level coverage.

(c) A participating dairy operation that elects margin protection coverage above $4 is required to pay an annual premium based on coverage level and covered production history in addition to the administrative fee. Tier 1 applies to covered production history up to and including 5 million pounds; Tier 2 applies to covered production history above 5 million pounds.

(d) A participating dairy operation may only select one coverage level threshold and only one percentage of coverage applicable to both Tier 1 and Tier 2. However, a participating dairy operation that elects a coverage level threshold of $8.50, $9, or $9.50, according to paragraph (a)(1) of this section, on the dairy operation's first 5 million pounds of production history under Tier 1, must choose a different coverage level threshold that is equal to $4, $4.50, $5, $5.50, $6, $6.50, $7, $7.50, $8 to apply to production history in excess of 5 million pounds included in the covered production under Tier 2 elected by the participating dairy operation.

(e) The premium per cwt of milk, based on the elected percentage of coverage of production history is specified in the following table:

TABLE 1 TO § 1430.407(e)

Coverage level (margin)	Tier 1 premium per cwt (for the covered production history that is 5 million pounds or less)	Tier 2 premium per cwt (for the part of covered production history over 5 million pounds)
$4.00	None	None
4.50	$0.0025	$0.0025
$5.00	0.005	0.005
$5.50	0.030	0.100
6.00	0.050	0.310
6.50	0.070	0.650
7.00	0.080	1.107
7.50	0.090	1.413
8.00	0.100	1.813
8.50	0.105	N/A
9.00	0.110	N/A
9.50	0.150	N/A

(f) The annual premium due for a participating dairy operation is calculated by multiplying:

(1) The covered production history; and

(2) The premium per cwt of milk specified in paragraph (e) of this section for the coverage level elected in paragraph (d) of this section by the dairy operation.

(g) In the case of a new dairy operation that first registers to participate in DMC for a calendar year after the start of the calendar year, the participating dairy operation is required to pay a pro-rated premium for that calendar year based on the portion of the calendar year for which the participating dairy operation is eligible, and for which it purchases the coverage.

(h) A participating dairy operation is required to pay the annual premium in total as specified in paragraphs (d) and (e) of this section for the applicable calendar year, at time of submission of coverage election to FSA; but no later than September 1 of the applicable calendar year of coverage, unless otherwise specified by the Deputy Administrator.

(i) If the total premium is not paid for an applicable calendar year of coverage as specified in paragraph (g) of this section, the participating dairy operation will lose coverage until such time as the premium has been fully paid.

(j) For each calendar year 2019 through 2023, a participating dairy operation that makes a one time election of a coverage level threshold and a percentage of coverage according to this section, for a 5-year period, will have their elected coverage level, as applicable to each tier, reduced by 25 percent. The option to lock in for the premium rate discount must be elected

during the 2019 annual coverage election period announced by FSA. Except that, new dairy operations, not in existence during the 2019 annual election period, that elect to participate in DMC according to § 1430.404(b), are eligible to receive the premium rate discount for locking coverage for the period beginning with the first available calendar year and ending in 2023, except that new dairy operations registering for DMC for the first time for coverage year 2023 and dairy operations that stop producing and marketing milk in 2019 that are registering for eligible months in 2019 are not eligible for the multi-year premium discount. All dairy operations that elect the lock-in option are subject to full participation in the DMC Program at the same elected premium coverage levels and calculated premium for the duration of DMC according to § 1430.413.

(k) Annual premium balances due to CCC from a participating dairy operation for a calendar year of coverage must be paid in full no later than September 1 of the applicable calendar year or within a grace period determined by the Deputy Administrator, if applicable.

(l) The Deputy Administrator may waive the obligation to pay the premium, or refund the premium paid, of a participating dairy operation for a calendar year, for death, retirement, permanent dissolution of a participating dairy operation, or other circumstances determined by the Deputy Administrator. In these instances, the contract will be terminated immediately, except with respect to payments accrued to the benefit of the participating dairy operation under this subpart before such termination.

(m) DMC administrative fees and premiums are required to be paid by a negotiable instrument satisfactory to FSA and made payable to CCC and either mailed to or provided in person to the administrative county office or other location designated by FSA.

§ 1430.408 MPP-Dairy premium repayments.

(a) A dairy operation that participated in MPP-Dairy during any of calendar years 2014 through 2017 may receive a repayment in an amount equal to the difference between the total amount of premiums paid by the dairy operation for each applicable calendar year of coverage and the total amount of payments made to the MPP-Dairy participating dairy operation for that applicable calendar year.

(b) FSA will determine the calculated repayment amounts for each year for each dairy operation that participated in MPP-Dairy during the years of 2014 through 2017.

(1) Coverage years in which the payments exceeded premiums paid for that coverage year will yield a $0 calculation for that calendar year.

(2) Dairy operations must provide adequate proof, to the satisfaction of FSA, for calculated repayment amounts in dispute.

(c) Qualifying dairy operations according to paragraph (a) of this section, must elect on a form prescribed by CCC, to receive the repayment in either an amount that is equal to the following:

(1) 75 percent of the calculated repayment as a credit that may be used by the dairy operation towards DMC premiums; or

(2) 50 percent of the calculated repayment as a direct cash repayment.

(d) Dairy operations may transfer their premium repayment election choice in paragraph (c) of this section to a dairy operation that succeeded to the dairy operation through a succession-in-interest transfer under MPP-Dairy. However, the dairy operation to which the election choice is being transferred to must be participating in the DMC Program if the credit option is elected according to paragraph (c)(1) of this section. Otherwise, their credit repayment election is not transferrable. Dairy operations that give up their right to elect a premium repayment option by designation of such on a form prescribed by CCC are not eligible to receive a cash or credit benefit, in full or partially, for premiums paid under MPP-Dairy.

(e) A dairy operation that elects the credit option can only use the credit in the DMC Program. If the entire credit is not used, for any reason, it cannot be applied as a credit to any other USDA program and will have zero cash value that cannot be redeemed for any purpose.

(f) A dairy operation that elects the cash repayment option will have the repayment issued only in the name of the dairy operation entity as it existed in MPP-Dairy.

(g) A dairy operation must choose their MPP-Dairy premium repayment option on a form prescribed by CCC during a period specified by FSA. Once the premium repayment choice of credit or cash is made by the dairy operation and approved by FSA, that choice cannot be changed.

§ 1430.409 Dairy margin coverage payments.

(a) A DMC payment will be made to a participating dairy operation for any month when the average actual dairy production margin for that month falls below the coverage level threshold in effect for the participating dairy operation.

(b) Payments trigger at the catastrophic level or at the buy-up level; the payments will be calculated according to this paragraph. If the dairy operation only has catastrophic coverage or buy-up coverage at 95 percent, there will be a single calculation. If the dairy operation purchased buy-up coverage at less than 95 percent and the catastrophic level also triggers a payment, then there will be two calculations to determine the payment—first the calculation for the buy-up coverage percentage and then the calculation for the catastrophic level percentage, which is the balance of the established production history up to 95 percent; the result of these two calculations will be added together to determine the payment amount. Each calculation multiplies the payment rate times the coverage percentage times the production history divided by 12 as follows:

(1) *Payment rate.* The amount by which the coverage level exceeds the average actual dairy production margin for a month;

(2) *Coverage percentage.* The coverage percentage; and

(3) *Production history.* The production history of the dairy operation, divided by 12.

(c) If the dairy operation purchased buy-up level coverage at less than 95 percent of production history, then the dairy operation will receive a payment calculated at the buy-up level, plus the payment at the catastrophic level, if triggered, for the balance of 95 percent of its established production history. For example, if a producer purchased buy-up coverage at the 50 percent level, then that producer will also receive catastrophic level coverage for the next 45 percent for total coverage of 95 percent.

§ 1430.410 Effect of failure to pay administrative fees or premiums.

(a) A participating dairy operation that fails to pay a required administrative fee or premium payment due upon application to DMC or for a calendar year of coverage:

(1) Remains legally obligated to pay such administrative fee or premium, as applicable; and

(2) Upon such failure to pay when due, loses coverage under DMC until such administrative fee or premium is paid in full, and once paid, coverage will be reinstated beginning with the month coverage was lost.

(b) CCC may take such actions as necessary to collect unpaid administrative fees and premium payments.

§ 1430.411 Calculation of average feed cost and actual dairy production margins.

(a) Payments are made to a participating dairy operation as specified in this subpart only when the calculated average actual dairy production margin for a month is below the coverage level in effect for the participating dairy operation. That margin will be calculated on a national basis and is the amount by which for the relevant month, the all milk price exceeds the average feed cost for dairy producers. The average actual dairy production margin calculation applies to all participating dairy operations. The calculations are not made on an operation by operation basis or on their marketings.

(b) For calculating the national average feed cost that dairy operations use to produce a cwt of milk, the following three items will be added together:

(1) The product determined by multiplying 1.0728 by the price of corn per bushel;

(2) The product determined by multiplying 0.00735 by the price of soybean meal per ton; and

(3) The product determined by multiplying 0.0137 by the price of alfalfa hay per ton.

(c) To make those feed calculations, the Deputy Administrator on behalf of CCC will use the following full month data:

(1) For corn, the full month price received by farmers during the month in the United States as reported in the monthly Agricultural Prices report by USDA NASS;

(2) For soybean meal, the Central Illinois soybean meal price delivered by rail as reported in the USDA AMS Market News-Monthly; and

(3) For alfalfa hay, the average of the full month price received during the month by farmers in the United States for high-quality (premium and supreme) alfalfa hay and the alfalfa hay price (which was used to calculate the MPP hay price) for the same month as reported in the monthly Agricultural Prices report by USDA NASS will be used to calculate the hay price.

(d) The national average feed cost data for corn, soybean meal, and alfalfa hay used in the calculation of the national average feed cost to determine the actual dairy production margin for the relevant period, will be the data reported in the publication the following month. (For example, full month May prices will be available in the June publication, and those will be the prices used).

(e) The actual dairy production margin for each month, will be calculated by subtracting:

(1) The average feed cost for that month, determined under paragraph (b) of this section; from

(2) The all-milk price for that same month.

§ 1430.412 Relation to RMA's LGM-Dairy Program.

(a) Dairy producers that produced and commercially marketed milk in 2018 and participated in the LGM-Dairy Program operated by RMA in 2018 are eligible to receive retroactive 2018 coverage under MPP-Dairy for those months in operation. Approved participation for retroactive MPP-Dairy coverage is subject to verification of LGM-Dairy coverage in 2018 by RMA.

(b) Eligible dairy producers must apply for the retroactive 2018 MPP-Dairy coverage on a CCC-prescribed application form during a signup period announced by the Deputy Administrator.

(c) Eligible producers that received partial year benefits under MPP-Dairy are eligible for the full year, less any payments issued for a month that triggered a payment under MPP-Dairy in 2018.

§ 1430.413 Multi-year contract for lock-in option.

(a) Participating dairy operations enrolled in DMC according to § 1430.407(j) are registered through December 31, 2023. As such, a participating dairy operation is obligated to pay applicable administrative fees and applicable premiums each succeeding calendar year following the date the contract is first entered into through December 31, 2023. Likewise, any successor to the dairy operation with lock-in coverage will be bound to the same coverage elections made by the predecessor and applicable premiums for the duration of the lock-in period.

(b) A participating dairy operation under a lock-in option that fails to pay applicable administrative fees and premiums for each year of the lock-in will remain obligated to pay such applicable administrative fees and premiums as specified in § 1430.410.

(c) If a participating dairy operation goes out of business as described in § 1430.407(l) before December 31, 2023, the contract will be terminated immediately, except with respect to payments accrued to the benefit of the participating dairy operation under this subpart before such termination.

§ 1430.414 Contract modifications.

(a) Producers in a participating dairy operation must notify FSA immediately of any changes that may affect their participation in DMC. Changes include, but are not limited to, death of a producer who is on the contract, producer joining the operation, producer exiting the operation, relocation of the dairy operation, transfer of shares by sale or other transfer action, or dairy operation reconstitutions as provided in § 1430.415.

(b) Payment of any outstanding premium or administrative fee for a participating dairy operation must be paid in full before a transfer of shares by sale or any other change in producers on the contract originally submitted to FSA may take effect. Otherwise, producer changes will not be recognized until the following annual election period, and only if at that time all associated premiums and administrative fees from any previous calendar year of coverage have been paid in full.

§ 1430.415 Reconstitutions.

(a) Any participating dairy operation that reorganizes or restructures after enrollment is subject to a review by FSA to determine if the operation was reorganized or restructured for the sole purpose of establishing an alternative production history for a participating dairy operation or was reorganized or restructured to otherwise circumvent any DMC Program provision under this subpart (including the tier system for premiums) or otherwise to prevent the accomplishment of the purpose of the DMC Program.

(b) A participating dairy operation that FSA determines has reorganized solely to establish a new production history or to circumvent the determination of applicable fees or premiums based on an established production history determined under this subpart will be considered to have failed to meet the DMC Program requirements and, in addition to other sanctions or penalties that may apply, will not be eligible for DMC payments.

(c) Under no circumstance, except as approved by the Deputy Administrator or provided for in these regulations, will the reconstitution or restructure of a participating dairy operation change the determined production history for the operation. The Deputy Administrator may, however, adjust the production history of a participating dairy operation if there is a calculation error or if erroneous information has been supplied by or on behalf of the participating dairy operation.

§ 1430.416 Offsets and withholdings.

FSA may offset or withhold any amount due to FSA or CCC under this subpart under the provisions of part 1403 of this chapter or any successor regulations, or any other authorities that may allow for collection action of that sort.

§ 1430.417 Assignments.

Any producer may assign a payment to be made under this subpart in accordance with part 1404 of this chapter or successor regulations as designated by the Secretary or as allowed by the Deputy Administrator in writing.

§ 1430.418 Appeals.

Any producer who is dissatisfied with a determination made pursuant to this subpart may request reconsideration or appeal of such determination under part 11 or 780 of this title.

§ 1430.419 Misrepresentation and scheme or device.

(a) In addition to other penalties, sanctions or remedies as may apply, all or any part of a payment otherwise due a person or legal entity on all participating dairy operations in which the person or legal entity has an interest may be withheld or be required to be refunded if the person or legal entity fails to comply with the provisions of this subpart or adopts or participates in adopting a scheme or device designed to evade this subpart, or that has the effect of evading this part. Such acts may include, but are not limited to:

(1) Concealing information that affects a registration or coverage election;

(2) Submitting false or erroneous information; or

(3) Creating a business arrangement using rental agreements or other arrangements to conceal the interest of a person or legal entity in a dairy operation for the purpose of obtaining DMC payments the individual or legal entity would otherwise not be eligible to receive. Indicators of such business arrangement include, but are not limited to the following:

(i) No milk is produced and commercially marketed by a participating dairy operation;

(ii) The participating dairy operation has no appreciable assets;

(iii) The only source of capital for the dairy operation is the DMC payments; or

(iv) The represented dairy operation exists mainly for the receipt of DMC payments.

(b) If the Deputy Administrator determines that a person or legal entity has adopted a scheme or device to evade, or that has the purpose of evading, the provisions of this subpart, such person or legal entity will be ineligible to receive DMC payments in the year such scheme or device was adopted and the succeeding year.

(c) A person or legal entity that perpetuates a fraud, commits fraud, or participates in equally serious actions for the benefit of the person or legal entity, or the benefit of any other person or legal entity, in violation of the requirements of this subpart will be subject to a 5-year denial of all DMC Program benefits. Such other equally serious actions may include, but are not limited to:

(1) Knowingly engaging in, or aiding in the creation of a fraudulent document or statement;

(2) Failing to disclose material information relevant to the administration of the provisions of this subpart, or

(3) Engaging in any other actions of a person or legal entity determined by the Deputy Administrator to be designed, or intended to, circumvent the provisions of this subpart.

(d) Program payments and benefits will be denied on pro-rata basis:

(1) In accordance with the interest held by the person or legal entity in any other legal entity or joint operations; and

(2) To any person or legal entity that is a cash rent tenant on land owned or under control of a person or legal entity for which a determination of this section has been made.

§ 1430.420 Estates, trusts, and minors.

(a) DMC Program documents executed by producers legally authorized to represent estates or trusts will be accepted only if such producers furnish evidence of the authority to execute such documents.

(b) A minor who is otherwise eligible for benefits under this subpart is also required to:

(1) Establish that the right of majority has been conferred on the minor by court proceedings or by law;

(2) Show that a guardian has been appointed to manage the minor's property and the applicable DMC Program documents are executed by the guardian; or

(3) Furnish a bond under which the surety guarantees any loss incurred for which the minor would be liable had the minor been an adult.

§ 1430.421 Death, incompetency, or disappearance.

In the case of death, incompetency, disappearance, or dissolution of a producer that is eligible to receive benefits under this subpart, such persons as are specified in part 707 of this title may receive such benefits, as determined appropriate by FSA.

§ 1430.422 Maintenance and inspection of records.

(a) Participating dairy operations are required to maintain accurate records and accounts that will document that they meet all eligibility requirements specified in this subpart, as may be requested by CCC or FSA. Such records and accounts are required to be retained for 3 years after the date of DMC payments to the participating dairy operation. Destruction of the records 3 years after the date of payment will be at the risk of the party undertaking the destruction.

(b) A participating dairy operation is required to allow authorized representatives of CCC, the Secretary, or the Comptroller General of the United States to have access to the premises of the dairy operation in order to inspect the herd of cattle, examine, and make copies of the books, records, and accounts, and other written data as specified in paragraph (a) of this section.

(c) Any producer or dairy operation that does not comply with the provisions of paragraph (a) or (b) of this section, or that otherwise receives a payment for which it is not eligible, is liable for that payment and is required to repay it to FSA, with interest to run from the date of disbursement.

§ 1430.423 Refunds; joint and several liability.

(a) Any legal entity, including joint operations, joint ventures and partnerships, and any member of a legal entity determined to have knowingly participated in a scheme or device, or other such equally serious actions to evade, or that has the purpose of evading the provisions of this part, will be jointly and severally liable for any amounts determined to be payable as the result of the scheme or device, or other such equally serious actions, including amounts necessary to recover the payments.

(b) Any person or legal entity that cooperates in the enforcement of the provisions of this part may be partially or fully released from liability, as determined by the Executive Vice President, CCC.

(c) The provisions of this section will be applicable in addition to any liability that arises under a criminal or civil law, regulation, or other provision of law.

§ 1430.424 Violations of highly erodible and wetland conservation provisions.

The provisions of 7 CFR part 12 apply to this part.

§ 1430.425 Violations regarding controlled substances.

The provisions of 7 CFR 718.6 apply to this part.

Richard Fordyce,

Administrator, Farm Service Agency.

Robert Stephenson,

Executive Vice President, Commodity Credit Corporation.

[FR Doc. 2019–12998 Filed 6–14–19; 4:15 pm]

BILLING CODE 3410–05–P

DEPARTMENT OF AGRICULTURE

Commodity Credit Corporation

7 CFR Part 1493

RIN 0551–AA99

Export Credit Guarantee (GSM–102) Program and Facility Guarantee Program (FGP) Certifications

AGENCY: Foreign Agricultural Service and Commodity Credit Corporation (CCC), USDA.

ACTION: Final rule.

SUMMARY: This final rule modifies the certifications required to qualify to participate in the Export Credit Guarantee (GSM–102) Program and the Facility Guarantee Program (FGP) to make them consistent with Government-wide debarment and suspension guidelines and U.S. Department of Agriculture requirements. Specifically, CCC is eliminating the requirement for participants to make certain certifications with respect to affiliates.

DATES: This rule is effective June 18, 2019.

ADDRESSES: U.S. Department of Agriculture, Foreign Agricultural Service, Credit Programs Division, 1400 Independence Ave. SW, Stop 1025, Room 5509, Washington, DC 20250–1025.

FOR FURTHER INFORMATION CONTACT: Amy Slusher, Deputy Director, Credit Programs Division, 202–720–6211, *Amy.Slusher@fas.usda.gov.*

SUPPLEMENTARY INFORMATION:

Background

On November 18, 2014, CCC published a Final Rule in the **Federal Register** (79 FR 68589) revising and amending the regulations that administer the Export Credit Guarantee (GSM–102) Program. On September 22, 2016, CCC published a Final Rule in the **Federal Register** (81 FR 65510) revising and amending the regulations that administer the Facility Guarantee Program (FGP). Both of these final rules incorporated certifications required of U.S. exporters, U.S. sellers, U.S. financial institutions and foreign financial institutions applying to participate in these programs. The certifications for the GSM–102 program are found at 7 CFR 1493.60, and those for the FGP at 7 CFR 1493.250. The certifications are, in part, based on Government-wide requirements related to suspension and debarment found at 2 CFR part 180 and prohibitions barring delinquent debtors from obtaining Federal loans, insurance and guarantees (31 CFR part 285). Certain certifications (at 7 CFR 1493.60(a)(1) through (4) and 7 CFR 1493.250(a)(1) through (4)) require the applicant to certify with respect to the applicant itself, as well as its ''principals'' and ''affiliates'' (as defined in 2 CFR part 180).

FAS is eliminating the requirement for applicants to make these certifications with respect to ''affiliates,'' for several reasons. First, there is no Government-wide or Department of Agriculture requirement to make these certifications with respect to ''affiliates.'' Neither the government-wide suspension and debarment regulations at 2 CFR part 180 nor the Department of Agriculture's form AD–1047 (''Certification Regarding Debarment, Suspension, and Other Responsibility Matters'') include affiliates. Second, FAS has determined that the affiliates of program participants generally do not have a relationship to the applicant's participation in CCC export credit guarantee programs. Third, the ''affiliate'' certification is burdensome on U.S. exporters, sellers, and U.S. and foreign financial institution participants that are large, and often diverse, organizations with many affiliates. This change will therefore reduce the burden on program applicants and participants.

Notice and Comment

In general, the Administrative Procedure Act (5 U.S.C. 553) requires that a notice of proposed rulemaking be published in the **Federal Register** and interested persons be given an opportunity to participate in the rulemaking through submission of written data, views, or arguments, except when the rule involves a matter relating to public property, loan, grants, benefits or contracts. The Administrative Procedure Act also states notice of proposed rulemaking is not required ''when the agency for good cause finds . . . that notice and public procedure thereon are impracticable, unnecessary, or contrary to the public interest.'' Because this rule involves two loan guarantee programs, the regulations for this program are exempt from the notice and comment provisions of 5 U.S.C. 553. Additionally, the agency has determined that because this amendment will make the existing rules at 7 CFR part 1493 consistent with U.S. Government and Departmental certification requirements and will reduce burden on participants, notice of proposed rulemaking is unnecessary. It is in the public interest to implement these changes as soon as possible; therefore, this final rule is effective when published in the **Federal Register**.

Executive Order 12866 and 13563

Executive Orders 12866 and 13563 direct agencies to assess all costs and benefits of available regulatory alternatives and, if regulation is necessary, to select regulatory approaches that maximize net benefits (including potential economic, environmental, public health and safety effects, distributive impacts, and equity). Executive Order 13563 emphasizes the importance of quantifying both costs and benefits, of reducing costs, of harmonizing rules, and of promoting flexibility. This proposed rule has been determined to be not significant and was not reviewed by the Office of Management and Budget (OMB) in conformance with Executive Order 12866.

Executive Order 13175

This rule has been reviewed for compliance with Executive Order 13175, ''Consultation and Coordination with Indian Tribal Governments.'' Executive Order 13175 requires Federal agencies to consult and coordinate with tribes on a government-to-government basis on policies that have tribal implications, including regulations, legislative comments, proposed legislation, and other policy statements or actions that have substantial direct effects on one or more Indian tribes, on the relationship between the Federal Government and Indian tribes or on the distribution of power and responsibilities between the Federal government and Indian tribes. FAS has assessed the impact of this rule on Indian tribes and determined that this rule does not, to the knowledge of FAS, have tribal implications that required tribal consultation under Executive Order 13175. If a tribe requests consultation, FAS will work with USDA Office of Tribal Relations to ensure meaningful consultation is provided where changes, additions, and modifications identified herein are not expressly mandated by Congress.

Executive Order 13771

Executive Order 13771 directs agencies to reduce regulation and control regulatory costs and provides that for every new regulation issued, at least two prior regulations be identified for elimination, and that the cost of planned regulations be prudently managed and controlled through a budgeting process. This rule is not an Executive Order 13771 regulatory action because this rule is not significant under Executive Order 12866.

List of Subjects in 7 CFR Part 1493

Agricultural commodities, Exports.

Accordingly, for the reasons stated in the preamble, 7 CFR part 1493 is amended as follows:

PART 1493—CCC EXPORT CREDIT GUARANTEE PROGRAMS

■ 1. The authority citation for part 1493 continues to read as follows:

Authority: 7 U.S.C. 5602, 5622, 5661, 5662, 5663, 5664, 5676; 15 U.S.C. 714b(d), 714c(f).

■ 2. In § 1493.60, paragraphs (a)(1) through (4) are revised to read as follows:

§ 1493.60 Certifications required for program participation.

(a) * * *

(1) The applicant and any of its principals (as defined in 2 CFR 180.995) are not presently debarred, suspended, proposed for debarment, declared ineligible, or excluded from covered transactions by any U.S. Federal department or agency;

(2) The applicant and any of its principals (as defined in 2 CFR 180.995) have not within a three-year period preceding this application been convicted of or had a civil judgment rendered against them for commission of fraud or a criminal offense in connection with obtaining, attempting to obtain, or performing a public (Federal, State, or local) transaction or contract under a public transaction; violation of Federal or State antitrust statues or commission of embezzlement, theft, forgery, bribery, falsification or destruction of records, making false statements, or receiving stolen property;

(3) The applicant and any of its principals (as defined in 2 CFR 180.995) are not presently indicted for or otherwise criminally or civilly charged by a governmental entity (Federal, State or local) with commission of any of the offenses enumerated in paragraph (a)(2) of this section;

(4) The applicant and any of its principals (as defined in 2 CFR 180.995) have not within a three-year period preceding this application had one or more public transactions (Federal, State or local) terminated for cause or default;

* * * * *

■ 3. In § 1493.250, paragraphs (a)(1) through (4) are revised to read as follows:

§ 1493.60 Certifications required for program participation.

(a) * * *

(1) The applicant and any of its principals (as defined in 2 CFR 180.995) are not presently debarred, suspended, proposed for debarment, declared ineligible, or excluded from covered transactions by any U.S. Federal department or agency;

(2) The applicant and any of its principals (as defined in 2 CFR 180.995) have not within a three-year period preceding this application been convicted of or had a civil judgment rendered against them for commission of fraud or a criminal offense in connection with obtaining, attempting to obtain, or performing a public (Federal, State, or local) transaction or contract under a public transaction; violation of Federal or State antitrust statues or commission of embezzlement, theft, forgery, bribery, falsification or destruction of records, making false statements, or receiving stolen property;

(3) The applicant and any of its principals (as defined in 2 CFR 180.995) are not presently indicted for or otherwise criminally or civilly charged by a governmental entity (Federal, State or local) with commission of any of the offenses enumerated in paragraph (a)(2) of this section;

(4) The applicant and any of its principals (as defined in 2 CFR 180.995) have not within a three-year period preceding this application had one or more public transactions (Federal, State or local) terminated for cause or default;

* * * * *

Dated: June 10, 2019.

Robert Stephenson,

Executive Vice President, Commodity Credit Corporation.

In concurrence with:

Dated: June 7, 2019.

Ken Isley,

Administrator, Foreign Agricultural Service.

[FR Doc. 2019–12581 Filed 6–17–19; 8:45 am]

BILLING CODE 3410–10–P

DEPARTMENT OF AGRICULTURE

Rural Utilities Service

7 CFR Parts 1728 and 1755

Standards and Specifications for Timber Products Acceptable for Use by Rural Utilities Service Electric and Telecommunications Borrowers

AGENCY: Rural Utilities Service, USDA.

ACTION: Final rule; request for comments.

SUMMARY: The Rural Utilities Service (RUS), an agency of U.S. Department of Agriculture, is amending its regulations on Electric and Telecommunications Standards and Specifications for Materials, Equipment and Construction, to make changes to Bulletin 1728F–700, RUS Specification for Wood Poles, Stubs and Anchor Logs; Bulletin 1728H–701, Specification for Wood Crossarms, Transmission Timbers, and Pole Keys; and Bulletin 1728H–702, Specification for Quality Control and Inspection of Timber Products (Wood Bulletins) to keep RUS standards current with the technology advances and consistent with the industry practice. The bulletins are provided as regulated specifications to RUS Electric Program borrowers for procurement of electric transmission and distribution line wood materials.

DATES:

Effective Date: This final rule is effective June 18, 2019.

Comments Due Date: Comments are due no later than August 2, 2019.

Incorporation by Reference: The incorporation by reference of certain publications listed in this rule is approved by the Director of the Federal Register as of June 18, 2019.

ADDRESSES: Submit comments identified as 7 CFR 1728.97(a)(21) Bulletin 1728F–700, 7 CFR 1728.201 Bulletin 1728H–701, and/or 7 CFR 1728.202 Bulletin 1728H–702 by the following method:

• *Federal eRulemaking Portal:* Go to *http://www.regulations.gov* and, in the lower ''Search Regulations and Federal Actions'' box, select ''Rural Utilities Service'' from the agency drop-down menu, then click on ''Submit.'' In the Docket ID column, select RUS–18–ELECTRIC–0008 to submit or view public comments and to view supporting and related materials available electronically. Information on using *Regulations.gov,* including instructions for accessing documents, submitting comments, and viewing the docket after the close of the comment

period, is available through the site's ''User Tips'' link.

Other Information: Additional information about Rural Development and its programs is available on the internet at: *https://www.usda.gov/topics/rural.*

FOR FURTHER INFORMATION CONTACT:

Chendi Zhang, Mechanical Engineer, Engineering Standards Branch, Electric Programs, Rural Utilities Service, Rural Development U.S. Department of Agriculture, 1400 Independence Ave. SW, Washington, DC 20250–1567; Phone: 202–690–9032; email: *Chendi.Zhang@usda.gov.*

SUPPLEMENTARY INFORMATION:

Executive Order 12866

This final rule is exempt from the Office of Management and Budget (OMB) review for purposes of Executive Order 12866 and, therefore, has not been reviewed by OMB.

Executive Order 12372

This final rule is excluded from the scope of Executive Order 12372, Intergovernmental Consultation, which may require consultation with State and local officials. A notice of final rule entitled ''Department Programs and Activities Excluded from Executive Order 12372,'' (50 FR 47034) exempted the Rural Utilities Service loans and loan guarantees from coverage under this order.

Executive Order 12988

This final rule has been reviewed under Executive Order 12988, Civil Justice Reform. The Rural Utilities Service has determined that this rule meets the applicable standards provided in section 3 of the Executive Order. In addition, all state and local laws and regulations that are in conflict with this final rule will be preempted. No retroactive effect will be given to this final rule and in accordance with section 212(e) of the Department of Agriculture Reorganization Act of 1994 (7 U.S.C. 6912(e)) administrative appeal procedures, if any, must be exhausted before an action against the Department or its agencies may be initiated.

Executive Order 13132

This final rule will not have substantial direct effects on the States, on the relationship between the national government and the States, or on distribution of power and responsibilities among the various levels of government. Under Executive Order 13132, this final rule does not have sufficient federalism implications to require preparation of a Federalism Assessment.

Regulatory Flexibility Act Certification

The Rural Utilities Service has been determined that the Regulatory Flexibility Act is not applicable to this rule since USDA Rural Utilities Service is not required by 5 U.S.C. 551 *et seq.* or any other provision of the law to publish a notice of proposed rulemaking with request to the subject matter of this rule.

Information Collection and Recordkeeping Requirements

This final rule contains no new reporting or recordkeeping burdens under OMB control number 0572–0076 that would require approval under the Paperwork Reduction Act of 1995 (44 U.S.C. chapter 35, as amended).

Catalog of Federal Domestic Assistance

The program described by this final rule is listed in the Catalog of Federal Domestic Assistance Programs under No. 10.850, Rural Electrification Loans and Loan Guarantees. This catalog is available on a subscription basis from the Superintendent of Documents, U.S. Government Printing Office, Washington, DC 20402–9325, telephone number (202) 512–1800.

Unfunded Mandates

This final rule contains no Federal Mandates (under the regulatory provision of title II of the Unfunded Mandates Reform Act of 1995 [2 U.S.C. chapter 25]) for State, local, and tribal governments or the private sector. Thus, this final rule is not subject to the requirements of sections 202 and 205 of the Unfunded Mandates Reform Act of 1995.

National Environmental Policy Act Certification

The Rural Utilities Service has determined that this final rule will not significantly affect the quality of the human environment as defined by the National Environmental Policy Act of 1969 (42 U.S.C. 4321 *et seq.*). Therefore, this action does not require an environmental impact statement or assessment.

USDA Non-Discrimination Statement

In accordance with Federal civil rights law and U.S. Department of Agriculture (USDA) civil rights regulations and policies, the USDA, its Agencies, offices, and employees, and institutions participating in or administering USDA programs are prohibited from discriminating based on race, color, national origin, religion, sex, gender identity (including gender expression), sexual orientation, disability, age, marital status, family/parental status, income derived from a public assistance program, political beliefs, or reprisal or retaliation for prior civil rights in any program or activity conducted or funded by the Department. (Not all prohibited basis will apply to all programs and/or employment activities.) Remedies and complaint filing deadlines vary by program or incident. Persons with disabilities who require alternative means of communication for program information (*e.g.,* Braille, large print, audiotape, American Sign Language, etc.) should contact the responsible Agency or USDA's TARGET center at (202) 720–2600 (voice and TTY) or contact USDA through the Federal Relay Service at (800) 877–8339. Additionally, program information may be made available in languages other than English.

To file a program discrimination complaint, complete the USDA Program Discrimination Complaint Form (PDF), found online at *http://www.ascr.usda.gov/complaint_filing_cust.html,* or at any USDA office, or write a letter addressed to USDA and provide in the letter all of the information requested in the form. To request a copy of the complaint form, call (866) 632–9992 to request the form. Submit your completed complaint form or letter to USDA by: (1) Mail at U.S. Department of Agriculture, Office of Assistant Secretary for Civil Rights, 1400 Independence Avenue SW, Washington, DC 20250–9410, by Fax (202) 690–7442 or Email at *program.intake@usda.gov.*

USDA is an equal opportunity provider, employer, and lender.

Background

General Discussion

The Rural Utilities Service maintains bulletins that contain construction standards and specifications for materials and equipment. These standards and specifications apply to systems constructed by electric and telecommunications borrowers in accordance with the loan contract, and contain standard construction units, materials, and equipment units used on electric and telecommunications borrowers' systems. The following bulletins establish standards for the manufacture and inspection of wood utility poles, crossarms and pole keys: Bulletin 1728F–700, ''RUS Specification for Wood Poles, Stubs and Anchor Logs'' (incorporated by reference at § 1728.97); 7 CFR 1728.201 ''Bulletin 1728H–701, Specification for Wood Crossarms (Solid and laminate), Transmission Timbers, and Pole Keys;'' and 7 CFR 1728.202 ''Bulletin 1728H–

702, Specification for Quality Control and Inspection of Timber Products.''

Changes to the Regulations

The Agency is affording the public an opportunity to comment on the following changes to standards and specifications as applied to systems constructed by electric and telecommunications borrowers:

1. Changes relevant to Bulletin 1728F–700 (incorporated by reference at § 1728.97), 7 CFR 1728.201, Bulletin 1728H–701, and 7 CFR 1728.202, Bulletin 1728H–702:

(a) Significantly limit the number of individual AWPA standards contained in the reference section of the current RUS specifications.

RUS references several other national standards/specifications in the wood products specifications. For the RUS standards to keep current with each of these referenced documents, RUS would basically have to change their wood product specifications to some degree every year. The AWPA standards referenced in RUS specifications could best be kept current by simply referencing two broad AWPA standards, AWPA Standard U1, User Specification for Treated Wood and AWPA Standard T1, Processing and Treatment Standard, rather than listing each individual AWPA standard that is currently referenced in the RUS wood product specifications. All the information contained in the long list of individual AWPA standards now found in the RUS wood product specifications is found somewhere in either of these two AWPA standards.

(b) Add language to the specifications requiring that all third-party agencies involved in the inspection of RUS products must, on an annual basis, provide RUS Technical Standards Committee ''A'' with proof that the agency does have: (1) The required insurance coverage, and (2) the required, fully equipped laboratory capable of running each of the referee methods of analysis.

While these two requirements themselves are not new, providing proof of such to RUS on an annual basis is new. The reason for making this change is that in recent years, there apparently have been several instances where third-party agencies involved in RUS inspection did not have the required insurance or the required lab facilities. Given that RUS currently does not have the ability to provide an active overview of these third-party agencies, this change simply provides RUS with a method for checking the basic legitimacy of any company involved in the inspection of RUS treated wood products. It also provides both RUS and the cooperative borrower with some possible source of fiscal recovery if problems with product service in line can be traced back to performance issues involving the third-party agency being utilized.

(c) Addition of language that clearly defines the different function of plant quality control versus the function of third-party inspection.

This is a small but important change, in that over the past 30–40 years there has been a deliberate ongoing attempt by many former and some current inspection agencies to blur the distinction between the two functions to promote their inspection services. It is extremely important that the cooperative utilities using these RUS specifications understand exactly what the different function of plant quality control and of third-party inspectors are, that these two are separate and distinct functions, and that each has very specific requirements. Clarifying the two will make it clear that the responsibility for product quality does and always has rested with the producer, eliminating the widespread fallacy that the responsibility for product quality lies with the third-party inspector.

(2) Changes relevant only to Bulletin 1728F–700, (7 CFR 1728.97, Incorporation by reference of electric standards and specifications, (incorporation approved for 7 CFR 1728.98) and 7 CFR 1728.202, Bulletin 1728H–702:

Addition of language listing the referee methods of analysis for each of the major types of preservatives used to treat RUS poles and crossarms.

Over the last couple of decades, much of the wet chemistry that was previously used to run retention analyses on treated wood poles and crossarms has shifted to more modern and efficient methods, such as X-ray fluorescence. This addition simply notes the current referee methods for plant quality control labs and for the laboratories that must be maintained by any third-party inspection agency involved in the inspection of RUS treated wood products.

(3) Changes relevant only to Bulletin 1728F–700, ''Specification for Wood Poles, Stubs and Anchor Logs (incorporated by reference at § 1728.97):''

(a) Eliminate northern white cedar as an acceptable pole species, and eliminate any reference to it.

No manufacturer has produced a northern white cedar pole in over four decades. Given the availability of many other far superior species of trees for use as poles and crossarms, northern white cedar will not be used for poles again. Removing it from the specification does not affect a single producer.

(b) Change the restriction on the defect known as shelling to match the shelling restrictions recently adopted by ANSI in their O5.1 pole specification.

RUS currently restricts shelling to no more than one inch deep at any point on a pole's surface. That used to match the ANSI restriction for the same defect. Knowing this is a very dangerous defect that can cause utilities a lot of problems, several years ago ANSI decided to add an additional restriction to their shelling allowance. The current ANSI O5.1 language on shelling restrictions reads ''Shelling on the surface of the pole shall be limited to no more than one inch in depth nor exceed ⅓ of the pole's circumference at the point of shelling.'' Manufacturers are already operating under the current ANSI shelling restriction, so RUS adopting it in their specification will have no impact on the industry while providing a better overall product for cooperatives.

(c) Modify the language in the RUS specification dealing with rate of growth requirements for poles.

RUS has always had a rate of growth requirement (ring count requirement) to ensure that the trees used for poles have adequate strength characteristics. Given that ring count is a critical component in determining the strength of an individual pole, the proposed language modification to denote a ''referee'' method for determining ring count is a very important improvement to the current RUS specifications. This change will have no impact on the way ring count is currently determined, just provides clarification about how any difference of opinion over ring count in an individual pole is to be determined if there is a difference of opinion on the issue between two parties.

(d) Modify the language that ''no pole treated with an oil-borne preservative (penta and copper naphthenate) or with creosote can be shipped to a RUS borrower more than two years after its original treatment date'' to also include poles treated with water-borne preservatives such as CCA or ACZA.

The language modification is to make this two-year restriction applicable to all RUS poles, regardless of type of treatment. This change will bring all of the major preservatives under the same restriction. Given that both oil-borne preservatives and creosote do migrate over time to the low side of stored poles, it prevented potential problems with pole service life due to possibly significantly lower preservative content on the top side of poles held in a

producer's treated stock for an extended period. This two year ''drop-dead'' requirement also encouraged manufacturers to rotate their stock on a reasonably short basis, meaning they could provide their cooperative customers with the ''new'' fresher poles that utilities expected when they made pole purchases.

(e) Addition of a specific listing in Table 10 in Appendix A of Bulletin 1728F–700, the pole specification, that allows for the treatment Alaska Yellow Cedar with copper naphthenate.

Normally when cedar poles are produced, the vast bulk of the cedar itself is one species, western red cedar. However, a small amount of that volume might also be Alaska yellow cedar. The two species are quite similar in the way they look and treat. Apparently at least one large producer in the western region has developed a significant supply of Alaska yellow cedar that they wanted to produce and treat with copper naphthenate on a full charge basis. The species is a very good pole species, but there was no allowance for treating full charges composed of only Alaska yellow cedar in RUS Table 10. This change will add that allowance to Table 10. Overall, it will have a negligible impact on the industry because of the relatively scarcity of pure stands of Alaska yellow cedar.

(4) The following changes in the rule making are relevant only to 7 CFR 1728.201, RUS Bulletin 1728H–701, ''Specification for Wood Crossarms (Solid and Laminated), Transmission Timbers and Pole Keys.''

(a) Eliminate the allowance for producing thermal non-pressure treated crossarms.

The last thermal dip treating facility for crossarms was closed over 35 years ago. All of the crossarms produced today, whether Douglas-fir or southern pine, are pressure treated. Pressure treatment provides a much more uniform treatment and a far better product.

(b) Slight modification of the language contained in the one-year warranty for RUS crossarms to address the fact that no crossarms are sold directly from a crossarm producer to a cooperative, but rather are sold only through distributorships.

The current language in the crossarm warranty states ''If any crossarm is determined to be defective within 1 year after delivery to the borrower, it shall be replaced as promptly as possible by the producer.'' The modification simply replaces the word ''producer'' with the word ''supplier''. The term ''supplier'' is already properly defined elsewhere in the specification.

(5) The following changes in the rule making are relevant only to 7 CFR 1728.202, Bulletin 1728H–702, ''Specification for Quality Control and Inspection of Timber Products.''

(a) *Remove the Insured Warranty Program (IW) as a purchase plan for poles.*

The IW program was started back in the late 60's as another option for cooperative borrowers to use for inspection of RUS treated poles they were purchasing. The IW program ended in the mid 70's. Given that insurance premiums on a natural product like a wood pole or crossarm are very expensive (if an agency will even provide the coverage at all), and that there are other effective purchase plans available to cooperatives, and that IW hasn't been used in over 40 years, it needs to be removed from the specifications.

(b) Relocation of appendix A (formerly located in § 1728.202).

Appendix A, Inspector's Qualifications, was formerly located in § 1728.202. It is relocated to new § 1728.203, Inspector's qualifications, to comply with the codification requirements in 1 CFR chapter I.

Incorporation by Reference

Bulletin 1728F–700, RUS Specification for Wood Poles, Stubs and Anchor Logs. This specification describes the minimum acceptable quality of wood poles, stubs, telephone pedestal stubs, and anchor logs (hereinafter called poles, except where specifically referred to as stubs or anchor logs) purchased by or for RUS borrowers. The requirements of this specification implement contractual provisions between RUS and borrowers receiving financial assistance from RUS.

RUS provides free online public access to view and download copies of Bulletin 1728–F 700. The RUS website to view and download this bulletin is: *https://www.rd.usda.gov/publications/regulations-guidelines/bulletins/electric.*

AITC 200–2009, Manufacturing Quality Control Systems Manual for Structural Glued Laminated Timber, details requirements for quality control in accordance with the ANSI/AITC A190.1–1992. Laminators quality control system and inspection of plant quality control system by AITC Inspection Bureau are detailed. Topics addressed are personnel, equipment and facilities, quality control of production operations, testing and inspection requirements, test procedures, AITC tests, definitions and annexes. Recommended for manufacturers of glued laminated timber, third party testing and inspection agencies, and quality assurance agencies.

AITC Publications may be available for a fee by calling 503–639–0651, or as a free download online at their web address: *https://www.aitc-glulam.org/index.asp.* The AITC 200–2009 standard is reasonably available for a fee.

ANSI O5.2–2012, Structural Glued Laminated Timber for Utility Structures, covers requirements for manufacturing and quality control of structural glued laminated timber of Southern Pine, Coastal Region Douglas Fir, Hem Fir and other species of similar treatability for electric power and communication structures.

ANSI 05.3–2015, Solid Sawn Wood Crossarms & Braces: Specifications & Dimensions, consists of specifications covering solid sawn-wood crossarms and braces manufactured from coastal Douglas-fir and from dense Southern pine. The specifications are intended to cover communications crossarms, power crossarms, heavy-duty crossarms, and heavy-duty braces.

ANSI standards are reasonably available to obtain by calling 212–642–4980 or by online access at their web address: *https://webstore.ansi.org/* for a fee. ANSI O5.2–2012 and ANSI O5.3–2015 are also available for a fee in ANSI O5.—Wood Poles Package.

AWPA A6–15, Method for the Determination of Oil-Type Preservatives and Water in Wood. This method is suitable for the determination of creosote, petroleum, and their solutions in treated wood when the sample contains at least 5.0 grams of wood and one gram of oil.

Additives, such as copper naphthenate or pentachlorophenol, may not be quantitatively extracted by this method. The method can also be used for the determination of water in treated or untreated wood, but when it is so used, the directions on handling the sample in Standard M2 must be followed carefully.

AWPA A9–18, Standard Method for Analysis of Treated Wood and Treating Solutions By X-Ray Spectroscopy. This method provides for the non-destructive analysis of treated wood and treating solutions by X-ray fluorescence spectroscopy and is applicable to the determination of elements of atomic number 5 or higher that are present in significant quantity in the wood (usually above 0.05%). The elements covered in this method are specified for use in preservative and fire-retardant treatment of wood.

AWPA A15–18, Referee Methods. Referee methods are given to assist in the resolution of disputes over the

acceptability of the active(s) in treated wood products.

AWPA A83–18, Standard Method for Determination of Chloride for Calculating Pentachlorophenol in solution or Wood. The Methods, commonly called the ''lime ignition'' method, describes the chemical analysis of treating solutions which contain pentachlorophenol, of pentachlorophenol concentrates, and of wood treated with pentachlorophenol.

AWPA M2–16, Standard for the Inspection of Preservative Treated Products for Industrial Use. This Standard provides procedures for inspection at wood preserving plants of industrial products including but not limited to poles, crossarms, piling, ties, timbers, round posts and composite wood products. This Standard also contains detailed procedures and test methods for determining the conformance of treated wood products with specified standards or other written product quality specifications.

AWPA M3–16, Standard for the Quality Control of Preservative Treated Products for Industrial Use. This Standard provides procedures for quality control at wood preserving plants of industrial products, including but not limited to poles, crossarms, piling, ties, timbers, round posts and composite wood products. This standard contains minimum requirements for the treating plant quality control to monitor the treating plant and process, sample treated products and determine conformance to the applicable portions of Standards U1 and T1 or other written product quality specifications.

AWPA T1–18, Use Category System: Processing and Treatment Standard This Processing and Treatment Standard contains the minimum requirements and process limitations for treating wood products under the AWPA Standards. This includes conditioning of material for treatment, treatment processes and limitations, end-results of treatment, post treatment handling, and quality control applicable to all commodities treated under the AWPA Use Category System.

AWPA U1–18, Use Category System: User Specification for Treated Wood. The Use Category System (UCS) of the American Wood Protection Association (AWPA) designates what preservative systems and retentions have been determined to be effective in protecting wood products under specified exposure conditions.

AWPA standards are reasonably available to obtain for a fee by calling 1–855–999–9870 or by online access at the web address: *https://www.techstreet.com/standards/awpa-a9-18?product_id=2017417* for a fee. AWPA standards are also available for a fee in 2018 AWPA Book of Standards at *http://www.awpa.com/standards/index.asp.*

Standard Grading Rules for Southern Pine Lumber, 2014 Edition. Standard definitions and classifications of the most common characteristics and causes for grade limitation for Southern Pine lumber are provided. Also provided are descriptions of the characteristics allowed in southern pine lumber and other information such as general grade characteristics, definitions of lumber for different uses, moisture content, claim procedures and significant classes of lumber. The Inspection and Shipping Provisions of the Standard Grading Rules for Southern Pine Lumber represents customary usage and fair-trade practice.

This standard is reasonably available to obtain by online access at the web address for a fee by an order form: *https://www.spib.org/docs/litorderform.pdf* for a fee. Order forms can be emailed to *spib@spib.org* or faxed to 850–434–1290.

Standard No. 17, Grading Rules for West Coast Lumber. These rules apply to lumber species manufactured from timber grown in the West Coast region which includes the summit area of the Cascade Mountains and west to the Pacific Ocean in the states of Washington and Oregon, and in the entire state of California, and to those species of foreign origin specifically listed in these rules.

This standard is reasonably available by online access at the web address: *https://www.wclib.org/publications/rules-17/* for a free download or purchase for a fee.

List of Subjects

7 CFR Part 1728

Electric power, Incorporation by reference, Loan programs-energy, Reporting and recordkeeping requirements, Rural areas.

7 CFR Part 1755

Incorporation by reference, Loan programs-communications, Reporting and recordkeeping requirements, Rural areas, Telephone.

For reasons set forth in the preamble, chapter XVII of title 7 of the Code of Federal Regulations is amended as follows:

PART 1728—ELECTRIC STANDARDS AND SPECIFICATIONS FOR MATERIALS AND CONSTRUCTION

■ 1. The authority citation for part 1728 continues to read as follows:

Authority: 7 U.S.C. 901 *et seq.,* 1921 *et seq.,* 6941 *et seq.*

■ 2. Amend § 1728.97 by:

■ a. Revising the introductory text and paragraphs (a) introductory text, (a)(21), (b), and (c);

■ b. Redesignating paragraph (g)(1) as paragraph (g)(3) and paragraphs (d)(1) and (2) as paragraphs (g)(1) and (2);

■ c. Removing paragraph (d) and redesignating paragraphs (e) through (i) as paragraphs (d) through (h);

■ d. Revising newly redesignated paragraph (d) introductory text, newly redesignated paragraph (e), newly redesignated paragraph (f) introductory text, and newly redesignated paragraphs (g) and (h).

The revisions and additions read as follows:

§ 1728.97 Incorporation by reference of electric standards and specifications.

Certain material is incorporated by reference into this part with the approval of the Director of the Federal Register under 5 U.S.C. 552(a) and 1 CFR part 51. All approved material is available for inspection at the Rural Utilities Service, U.S. Department of Agriculture, Room 5170–S, Washington, DC 20250–1522, call (202) 720–8674 and is available from the sources listed in this section. It is also available for inspection at the National Archives and Records Administration (NARA). For information on the availability of this material at NARA, call (202) 741–6030 or go to *www.archives.gov/federal-register/cfr/ibr-locations.html.*

(a) Rural Utilities Service, U.S. Department of Agriculture, Room 5170–S–S, U.S. Department of Agriculture, Washington, DC 20250. For information on the availability of this material, call (202) 720–8674 or go to: *https://www.rd.usda.gov/publications/regulations-guidelines/bulletins.*

* * * * *

(21) Bulletin 1728F–700, RUS Specification for Wood Poles, Stubs and Anchor Logs (April 15, 2019), incorporation approved for §§ 1728.98 and 1728.202.

* * * * *

(b) American Institute of Timber Construction (AITC), 7012 S Revere Park Way, Englewood, Colorado 80112, telephone (303) 792–9559, web address: *https://www.aitc-glulam.org/index.asp.*

(1) AITC 200–2009, Manufacturing Quality Control Systems Manual For

Structural Glued Laminated Timber, copyright 2009, incorporation by reference approved for §§ 1728.201 and 1728.202.

(2) [Reserved]

(c) American National Standards Institute (ANSI), 25 West 43rd Street, New York, New York 10036, telephone (212) 642–4900, Web address: *http://www.ansi.org.*

(1) ANSI O5.2–2012, Structural Glued Laminated Timber for Utility Structures, approved May 9, 2012, incorporation by reference approved for §§ 1728.201 and 1728.202.

(2) ANSI O5.3–2015, Solid Sawn Wood Crossarms & Braces: Specifications & Dimensions, approved January 9, 2015, incorporation by reference approved for § 1728.201.

(d) ASTM International, 100 Barr Harbor Drive, West Conshohocken, PA 19428–2959, Telephone: (610) 832–9585, website: *www.astm.org.*

* * * * *

(e) American Wood Protection Association (AWPA), P.O. Box 361784, Birmingham, AL 35236–1784, telephone 205–733–4077, *http://www.awpa.com/.*

(1) AWPA A6–15, Method for the Determination of Retention of Oil-Type Preservatives from Small Samples, Reaffirmed 2015, incorporation by reference approved for § 1728.202.

(2) AWPA A9–18, Standard Method for Analysis of Treated Wood and Treating Solutions By X-Ray Spectroscopy, Revised 2018, incorporation by reference approved for § 1728.202.

(3) AWPA A15–18, Referee Methods, Revised 2018, incorporation by reference approved for § 1728.202.

(4) AWPA A83–18, Standard Method for Determination of Chloride for Calculating Pentachlorophenol in Solution or Wood, Reaffirmed 2018, incorporation by reference approved for § 1728.202.

(5) AWPA M2–16, Standard for the Inspection of Preservative Treated Products for Industrial Use, Revised 2016, incorporation by reference approved for § 1728.202.

(6) AWPA M3–16, Standard for the Quality Control of Preservative Treated Products for Industrial Use, Revised 2016, incorporation by reference approved for §§ 1728.201 and 1728.202.

(7) AWPA T1–18, Use Category System: Processing and Treatment Standard, Revised 2018, incorporation by reference approved for § 1728.201.

(8) AWPA U1–18, Use Category System: User Specification for Treated Wood, Revised 2018, incorporation by reference approved for §§ 1728.201 and 1728.202.

(f) Insulated Cable Engineers Association (ICEA). The following material may be purchased from: IHS Global Engineering Documents, 15 Inverness Way East, Englewood, CO 80112, Phone: (303) 397–7956; (800) 854–7179, Fax: (303) 397–2740, email: *global@ihs.com,* website: *http://global.ihs.com.*

* * * * *

(g) Southern Pine Inspection Bureau Standards, 4709 Scenic Highway, Pensacola, Florida 32504–9094, telephone (850) 434–2611. The web address for the Southern Pine Inspection Bureau is *http://www.spib.org/.*

(1) Standard Grading Rules for Southern Pine Lumber, 2014 Edition, effective January 25, 2014, incorporation by reference approved for § 1728.201.

(2) [Reserved]

(h) West Coast Lumber Inspection Bureau, P.O. Box 23145, Portland, Oregon 97281, telephone (503) 639–0651, fax (503) 684–8928. The web address for is *http://www.wclib.org/.*

(1) Standard No. 17, Grading Rules for West Coast Lumber, Revised September 1, 2018, incorporation by reference approved for § 1728.201.

(2) [Reserved]

■ 3. Revise § 1728.98(a)(21) to read as follows:

§ 1728.98 Electric standards and specifications.

(a) * * *

(21) Bulletin 1728F–700, RUS Specification for Wood Poles, Stubs and Anchor Logs (April 15, 2019).

* * * * *

■ 4. Revise § 1728.201 to read as follows:

§ 1728.201 Bulletin 1728H–701, Specification for Wood Crossarms (Solid and Laminated), Transmission Timbers and Pole Keys.

(a) *Scope.* (1) The specification in this section describes the minimum acceptable quality of wood transmission and distribution crossarms (hereinafter called arms) purchased by or for RUS borrowers. Where there is conflict between the specification in this section and any other specification referred to in this section, the specification in this section shall govern.

(2) The requirements of the specification in this section implement contractual provisions between RUS and borrowers receiving financial assistance from RUS. The contractual agreement between RUS and a RUS borrower requires the borrower to construct its system in accordance with RUS accepted plans and specifications. Each RUS electric and telecommunications borrower shall purchase only arms produced in accordance with the specification in this section. Each RUS electric and telecommunications borrower shall require a written confirmation from their selected contractor that all material utilized shall be produced in accordance with the specifications in this section.

(b) *General stipulations.* (1) Conformance of arms to RUS specifications is the responsibility of the producer. A member of the producer's staff shall be designated as quality control supervisor and charged with the responsibility for the exercise of proper quality control procedures throughout the production process. The primary responsibility of third-party inspection agencies is to verify that producers involved in the manufacture of RUS treated wood products have functional in-house quality control systems in place that result in the shipment of materials meeting applicable RUS specification requirements to borrowers.

(2) Treated wood products intended for RUS borrowers shall not be inspected when in the opinion of the inspector, unsafe conditions are present.

(3) Various requirements relating to quality control and inspection that are contained in § 1728.202 and ANSI O5.2 and ANSI O5.3 (both incorporated by reference in § 1728.97) shall be followed exactly and shall not be interpreted or subject to judgment by the producer's quality control personnel or by the third party inspector.

(4) The requirements of AWPA M3 (incorporated by reference in § 1728.97) pertaining to record keeping, pre-treatment storage, analytical laboratories, plant gauges and other plant facilities, shall be followed.

(5) The producer shall maintain its own properly staffed and equipped analytical laboratory or contract with an independent testing laboratory at or near the treating plant to provide the required analytical service. On a case-by-case basis, with written permission from RUS, a producer with more than one treatment facility may be allowed to use a central laboratory.

(6) Arms can be purchased under either of two purchase plans; a RUS approved Quality Assurance Plan or an Independent Inspection Plan. The method of inspection described in this section shall be used no matter which plan timber products are purchased under.

(7) All third-party inspectors involved in the inspection of RUS products shall maintain their impartiality when providing their inspection service. This requires that these individuals and their

employers, as well as producers and suppliers involved in providing RUS borrowers with treated wood products, maintain a professional separation during the performance of their respective functions to eliminate any possible conflict of interest.

(8) With the exception of financial agreements for inspection services, inspection agencies shall neither accept nor provide gratuities or free services to suppliers.

(9) Inspection agencies shall not offer product warranties on inspected material.

(10) Arms shall be warranted to conform to this specification. Arms shall meet or exceed their minimum allowable dimensions for at least one year from time of delivery to the borrower. If any arm is determined to be defective or does not conform to this specification within 1 year from the date of delivery to the borrower, it shall be replaced as promptly as possible by the supplier. In the event of failure to do so, the purchaser may make such replacement and the cost of the arm, at destination, shall be recovered from the supplier.

(c) *Definitions.* The following definitions apply to this section:

Agency refers to Rural Utilities Service (RUS), United States Department of Agriculture.

Certificate of compliance is a written certification by an authorized employee of the producer that the material shipped meets the requirements of this specification and any supplemental requirements specified in a purchase order from a borrower or the borrower's contractor.

Crossarm refers to the structural wood member used to support electrical conductors and equipment. The word arm is used interchangeably with crossarm.

Independent inspection refers to examination of material by a trained inspector employed by a commercial inspection agency.

Inspection means an examination of material in sufficient detail to ensure conformity to all requirements of the specification under which it was purchased.

Lot is a certain number of pieces of a given item submitted for inspection at one time.

Producer is the party who manufactures arms. In some cases the producer may also be the treating plant.

Purchaser refers to either the RUS borrower or contractors acting as the borrower's agent, except where a part of the specification in this section specifically refers to only the borrower or the contractor.

Quality control supervisor refers to an employee of the producer designated to be responsible for quality control procedures carried out by said producer.

Reserve treated stock consists of treated material held in storage by a producer for purchase and immediate shipment to a borrower.

Supplier may refer to the producer, the treater, or to a third-party broker or distributorship involved in supplying RUS products to the borrowers.

Treating plant is the facility that applies the preservative treatment to the arms.

(d) *Material requirements*—(1) *Material and grade.* All arms furnished under the specification in this section shall be free of brashy wood, decay, and shall meet additional requirements as shown on specific drawings in this section. Arms shall be made of one of the following:

(i) Douglas-fir which conforms to the applicable provisions of paragraphs 170 and 170a, or the applicable transmission arm provisions of paragraphs 169 and 169a of the West Coast Lumber Standard No. 17 (incorporated by reference in § 1728.97). Only coastal origin Douglas-fir shall be used for Douglas-fir arms manufactured under the specification in this section;

(ii) Southern Yellow Pine which conforms to the provisions of Dense Industrial Crossarm 65, as described in Southern Pine Inspection Bureau's Standard Grading Rules for Southern Pine Lumber (incorporated by reference at § 1728.97); or

(iii) Laminated wood arms shall conform to ANSI O5.2 and have at least the same load carrying capacity as the solid sawn arms being replaced. The load carrying capacity of the laminated arms shall be determined by one of the procedures outlined in ANSI O5.2. The testing and inspection of laminated arms shall be in accordance with AITC 200 (incorporated by reference at § 1728.97).

(2) *Alternative arms.* Borrowers may use alternative arms that are listed in Informational Publication 202–1, *List of Materials Acceptable for Use on Systems of USDA Rural Utilities Service Borrowers.* For information on the availability of such material, contact the Chairman, Technical Standards Committee ''A'' (Electric), 1400 Independence Ave. SW, Stop 1569, Washington, DC 20250–1569, or go to: *https://www.rd.usda.gov/files/UEP_LoM.pdf.*

(3) *Knots.* Well-spaced round, firm, and tight knots are permitted.

(i) Slightly decayed knots are permitted, except on the top face, provided the decay extends no more than ¾ of an inch into the knot and provided the cavities will drain water when the arm is installed. For knots to be considered well-spaced, the sum of the sizes of all knots in any 6 inches of length of a piece shall not exceed twice the size of the largest knot permitted. More than one knot of maximum permissible size shall not be in the same 6 inches of length. Slightly decayed, firm, or round ''pin knots'' (⅜ of an inch or less) are not considered in size, spacing, or zone considerations.

(ii) Knots are subject to limits on size and location as detailed in Tables 1 and 2 to this paragraph (d)(3)(ii).

TABLE 1 TO PARAGRAPH (d)(3)(ii)—KNOT LIMITS FOR DISTRIBUTION ARMS (SEE FIGURE 1 TO THIS SECTION)

[All dimensions in inches]

Class of knot and location	Maximum knot diameter	
	Close grain	Dense grain
Round Knots:		
Single Knot: Maximum Diameter Center Section [1]		
Upper Half	¾	1
Lower Half	1	1¼
Elsewhere	1¼	1½
Sum of Diameters in 6-Inch Length: Maximum Center Section:		
Upper Half	1½	2
Lower Half	2	2½
Elsewhere	2½	3

[1] No knot shall be closer than its diameter to the pole mounting hole.

TABLE 2 TO PARAGRAPH (d)(3)(ii)—KNOT LIMITS FOR TRANSMISSION ARMS (SEE FIGURE 2 TO THIS SECTION)

[All dimensions in inches]

Pole mounting hole zone [1]	Maximum diameter for single knot
Upper Half (inner zone)	¾.
Upper Half (outer zone)	1 for close grain. 1¼ dense grain.

Other locations transmission arm size [2]	Narrow face	Wide face (two sides)	
		Edge	Along centerline
4⅝ × 5⅝ or less	1	1¼	1¼
5⅝ × 7⅜	1¼	1⅜	1⅞
3⅝ × 9⅜	¾	1¾	2¼

[1] No knot shall be closer than its diameter to the pole mounting hole.
[2] For cross sections not shown, refer to grading rules.

(iii) Knot clusters shall be prohibited unless the entire cluster, measured on the worst face, is equal to or less than the round knot allowed at the specific location.

(iv) Spike knots shall be prohibited in deadend arms. Any spike knot across the top face shall be limited to the equivalent displacement of a knot ⅜ of an inch deep on one face and the maximum round knot for its particular location on the worst face, with a maximum width of 1 inch measured at the midpoint of the spiked section. Elsewhere across the bottom or side faces, spike knots shall not exceed ½ the equivalent displacement of a round knot permitted at that location, provided that the depth of the knot on the worst face shall not exceed the maximum round knot allowed at that location.

(v) Loose knots shall be prohibited in deadend arms. Loose knots and knot holes shall be permitted only if they allow water to drain when the arm is installed in its normal position. In the center section, upper half, loose knots shall not be greater than ½ the dimensions of round knots. Elsewhere, loose knots shall not be greater than the round knot dimension.

(vi) All knots except those ''spike'' knots intersecting a corner shall be measured on the least diameter of the knot.

(vii) A knot shall be considered to occupy a specific zone or section if the center of the knot (*i.e.,* pith of knot) is within the zone or on the zone's boundary.

(viii) If a round or oval knot appears on two faces and is in two zones, each face shall be judged independently. When this does not occur, average the least dimension showing on both faces. Knots which occur on only one face of a free of heart center (FOHC) arm shall be permitted to be 25 percent larger than the stated size.

(ix) Two or more knots opposite each other on any face shall be limited by a sum not to exceed the size of a maximum single knot permitted for the location. On all four faces, all knots shall be well spaced.

(x) No knot over ⅝ inch in diameter may intersect pin holes in the center section. One-inch diameter knots may intersect insulator pin holes elsewhere.

(e) *Miscellaneous characteristics, features and requirements.* (1) The top face of distribution arms shall not have more than four medium pitch and bark pockets in 8-foot arms, and not more than five pitch and bark pockets in 10-foot arms. Elsewhere a maximum of six medium pitch and bark pockets in 8-foot arms and eight in 10-foot arms shall be permitted. Equivalent smaller pockets shall be permissible. An occasional large pocket is permissible.

(2) Shakes shall be prohibited.

(3) Prior to treatment on properly seasoned arms, single face checks shall not exceed an average penetration of ¼ the depth from any face and shall be limited to 10 inches long on the top face, and ⅓ the arm length on the other faces. Checks shall not be repeated in the same line of grain in adjacent pin holes. The sum of the average depths of checks occurring in the same plane on opposite faces shall be limited to ¼ the face depth.

(4) Compression wood shall be prohibited on any face. Compression wood is permitted if wholly enclosed in the arm, more than six annual rings from the surface, and not over ⅜ of an inch in width.

(5) Insect holes 3/32 of an inch and larger shall be prohibited. Insect pin holes (*i.e.,* holes not over 1/16 of an inch diameter) shall be allowed if scattered and not exceeding 10 percent of the arm girth.

(6) Wane shall be allowed on one edge, limited to approximately 1 inch measured across the corner. Outside of the top center section, an aggregate length not to exceed 2 feet may have wane up to 1½ inches on an occasional piece on one or both edges. Bark shall be removed.

(7) Prior to and after preservative treatment, crook, bow, or twist shall not exceed ½ of an inch in 8-foot arms and ⅝ of an inch in 10-foot arms.

(f) *Manufacturing*—(1) *Quality of work.* All arms shall be of the highest quality production. Arms shall be dressed on all four sides, although ''hit and miss skips'' may occur on two adjacent faces on occasional pieces.

(2) *Dimensions and tolerances.* All dimensions and tolerances shall conform to those shown on the drawings in this section or drawings supplied with the purchase order. Arms supplied shall meet or exceed minimum dimensions shown on the drawings in this section. Cross-sectional dimensions shall be measured and judged at about ¼ the arm length, except when the defects of ''skip dressing'' or ''machine bite or offset'' are involved.

(3) *Shape.* The shape of the arms at any cross section, except for permissible wane, shall be as shown on the respective drawings in this section or supplied with the order. The two top edges may be either chamfered or rounded ⅜ of an inch radius. The two bottom edges shall be slightly eased ⅛ of an inch radius for the entire length.

(4) *Lamination techniques.* Lamination techniques shall comply with ANSI O5.2.

(5) *Pin and bolt holes.* Pin and bolt holes shall be smoothly bored without undue splintering where drill bits break through the surface. The center of any hole shall be within ⅛ of an inch of the center-line locations on the face in

which it appears. Holes shall be perpendicular to the starting and finishing faces.

(6) *Incising.* The lengthwise surfaces of Douglas-fir arms shall be incised a minimum of ¼ of an inch deep. The incision shall be reasonably clean cut with a spacing pattern that ensures uniform penetration of preservative.

(g) *Conditioning prior to treatment.* AWPA T1 (incorporated by reference at § 1728.97) shall be followed.

(1) All solid sawn arms shall be made of lumber which has been kiln-dried. Douglas-fir arms shall have an average moisture content of 19 percent or less, with a maximum not to exceed 22 percent in a single arm. Southern Yellow Pine arms shall have an average moisture content of 22 percent or less, with a maximum not to exceed 30 percent in a single arm.

(2) Moisture content levels shall be measured at about ¼ the length and at a depth of about ⅕ the arm's thickness. Additionally, the moisture content gradient between the shell (*i.e.,* ¼ of an inch deep) and the core (*i.e.,* about 1 inch deep) shall not exceed 5 percentage points.

(3) A minimum of at least 20 solid sawn arms per treating charge shall be measured and the individual results recorded by the producer to verify moisture content.

(4) The moisture content of lumber used in laminating shall, at the time of gluing, be within the range of 8 to 12 percent, inclusive.

(h) *Preservatives.* (1) Creosote, waterborne preservatives, pentachlorophenol and copper naphthenate shall conform to the requirements of AWPA U1 (incorporated by reference at § 1728.97). Oxide formulations of waterborne preservatives shall be supplied. If CCA is the selected preservative, CCA–C shall be the type required.

(2) Douglas-fir arms shall not be treated with CCA.

(i) *Preservative treatment.* (1) All timber products manufactured under the specification in this section shall be pressure treated. AWPA T1 shall be followed.

(2) These materials may be further conditioned by steaming, or by heating in hot oil (Douglas-fir), within the following time and temperature limits:

	Max. time (hours)	Temperature
(i) Steam	3	220 °F
(ii) Heating in Preservation	3	210 °F

(3) A final steam or hot oil bath may be used only to meet cleanliness requirements. Total duration of the final steam bath shall not exceed 2 hours and the temperature shall not exceed 240 °F.

(j) *Results of treatment*—(1) *Penetration and retention.* The quality control supervisor shall test or supervise the testing of each treated charge for penetration and retention.

(2) *Method of sampling.* When testing penetration and retention, a borer core shall be taken from a minimum of 20 arms in each treating charge. The borings shall be taken from any face except the top face at a point as close to the end as possible, being at least 3 inches from the end of the arm and no closer than 3 inches from the edge of the holes. The bored holes shall be plugged with treated plugs. Borings from laminated arms shall not be taken from the same laminate unless there is an end joint separation.

(3) *Preservative penetration.* All of the sapwood present in Douglas-fir and southern yellow pine arms shall be completely penetrated with preservative. Preservative penetration in the heartwood of Douglas-fir arms shall be not less than 3 inches longitudinally from the edge of holes and ends, and at least 3/16 inch from the surface of any face.

(4) *Preservative retention.* Preservative retention in the outer 0.6 inch for Douglas-fir arms and in the outer one inch of southern yellow pine arms shall be not less than the following:

Preservative	Retention (pcf)
(i) Creosote	8.0
(ii) Pentachlorophenol	[1] 0.4
(iii) ACA, ACZA, or CCA–C	0.4
(iv) Copper Naphthenate	0.04

[1] This penta retention is for the lime ignition method. If the copper pyridine method is used when timbers may have been in contact with salt water, a penta retention of 0.36 pcf is required for all species native to the Pacific Coast region.

(5) *Arms surfaces.* The surfaces of all arms shall be free from oil exudation (bleeding) and pentachlorophenol crystallization (blooming), and other surface deposits.

(6) *Retreatment of arms.* Arms may be retreated no more than twice. Initial treatment steaming time plus retreatment steaming time, combined, shall not exceed total steaming time allowed.

(k) *Marking/branding.* (1) Before treatment, arms shall be legibly branded to a depth of approximately 1/16 of an inch, with the top of the brand oriented to the top of the arm. The brand shall be placed on either of the wide surfaces of the arm, approximately one foot from the midpoint of the piece.

(2) The letters and figures shall be not less than ½ of an inch in height.

(3) The brand shall include:

(i) The manufacturer's identification symbol;

(ii) Month and year of manufacture;

(iii) Species (DF for Douglas-fir and SP for southern yellow pine);

(iv) Preservative (C for creosote, P for penta, S for waterbornes, N for Copper Naphthenate); and

(v) Required retention. An example of required retention is: M–6–16 Manufacturer—Month—Year and DF–P–.4 Douglas—fir—penta treated—.40 pcf retention

(4) Brands and quality assurance/inspection marks shall be removed from arms that do not meet these specifications.

(l) *Storage.* (1) Producers may manufacture/treat RUS arms for reserve treated stock under either of the allowable purchase plans. (See paragraph (b)(6) of this section).

(2) Arms treated with creosote or oil-borne preservatives, and which have been held in storage for more than 1 year before purchase and shipment to the borrower shall be re-assayed before shipment. Any such arms found to be nonconforming for retention shall be retreated and reassayed per the requirements of this section of the specification.

(m) *Drawings.* (1) The drawings of Figure 3 to this section, Crossarm Drilling Guide, have a type number and show in detail the hole size, shape, and pattern desired for arms ordered under the specification in this section.

(2) Purchase orders shall indicate the type arm required.

(3) Arms shall be furnished in accordance with the details of the drawings in this section or in accordance with drawings attached to the purchase order.

(4) Appropriate drawings for transmission arms are to be specified and included with purchase orders. Technical drawings for transmission arms are published in Bulletin 1728F–811 (incorporated by reference at § 1728.97) and Bulletin 1728F–810 (incorporated by reference at § 1728.97).

(n) *Destination inspection.* The RUS borrower shall have the prerogative to inspect materials at destination. All provisions of the specification in this section shall apply to material inspected at destination. If a disagreement arises over conformance of materials received at destination, it shall be the responsibility of the supplier to resolve the matter with the purchaser.

(o) *Purchase of related specifications and standards.* (1) All ANSI and AWPA standards may be purchased from:

American Wood Protection' Association (AWPA), P.O. Box 361784, Birmingham, AL 35236–1784, Telephone (205)733–4077, Web address: *http://www.awpa.com.*

(2) Standard Grading Rules for Southern Pine Lumber and Special Products Rules for Structural, Industrial, and Railroad Freight Car Lumber may be purchased from: Southern Pine Inspection Bureau, 4709 Scenic Highway, Pensacola, Florida 32504–9094, Telephone (850) 434–2611, Web address: *http://www.spib.org.*

(3) Standard Grading Rules for West Coast Lumber may be purchased from: West Coast Lumber Inspection Bureau, P.O. Box 23145, Portland, Oregon 97281, Telephone (503) 639–0651, Web address: *http://www.wclib.org.*

(4) AITC 200 may be purchased from: American Institute of Timber Construction, 7012 S Revere Park Way, Englewood, Colorado 80112, Telephone (303) 792–9559, Web address: *http://aitc-glulam.org.*

(p) *Information to be completed by the borrower.* When using the specification in this section, the borrower or borrower's representative should enter into a written agreement with a material supplier by way of a contract or purchase order. This agreement should state that all arms shall be manufactured in strict accordance with the specifications in this section.

BILLING CODE 6355–01–P

Figures 1 and 2 to § 1728.201
Distribution and Transmission Arms

DISTRIBUTION ARMS
Figure 1

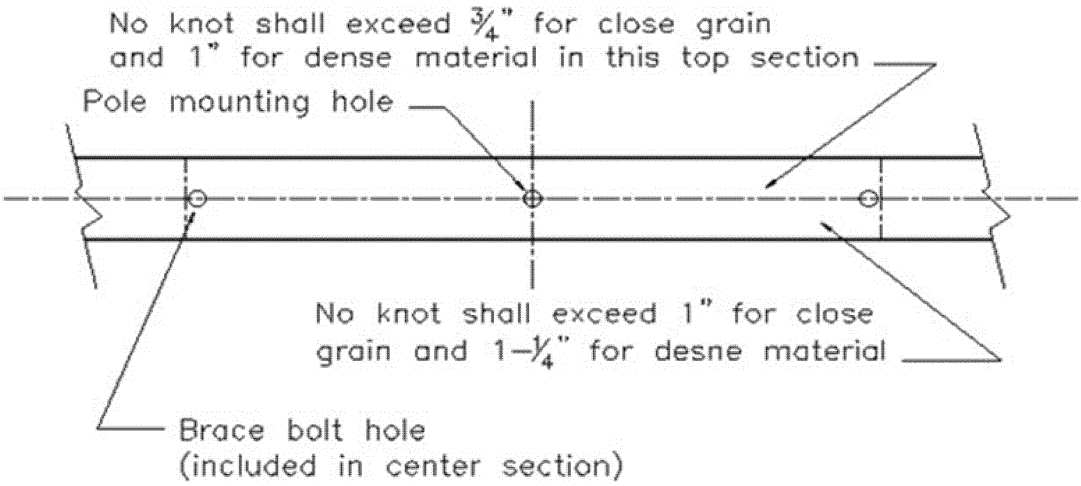

TRANSMISSION ARMS
POLE MOUNTING HOLE ZONE
Figure 2

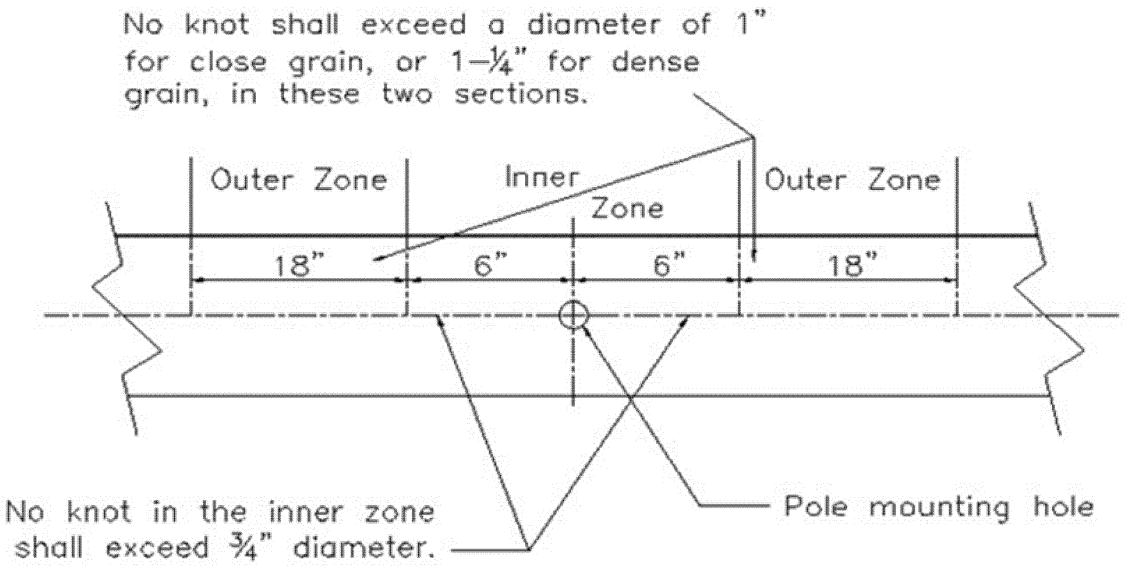

Figure 3 to §1728.201 – Crossarm Drilling Guide

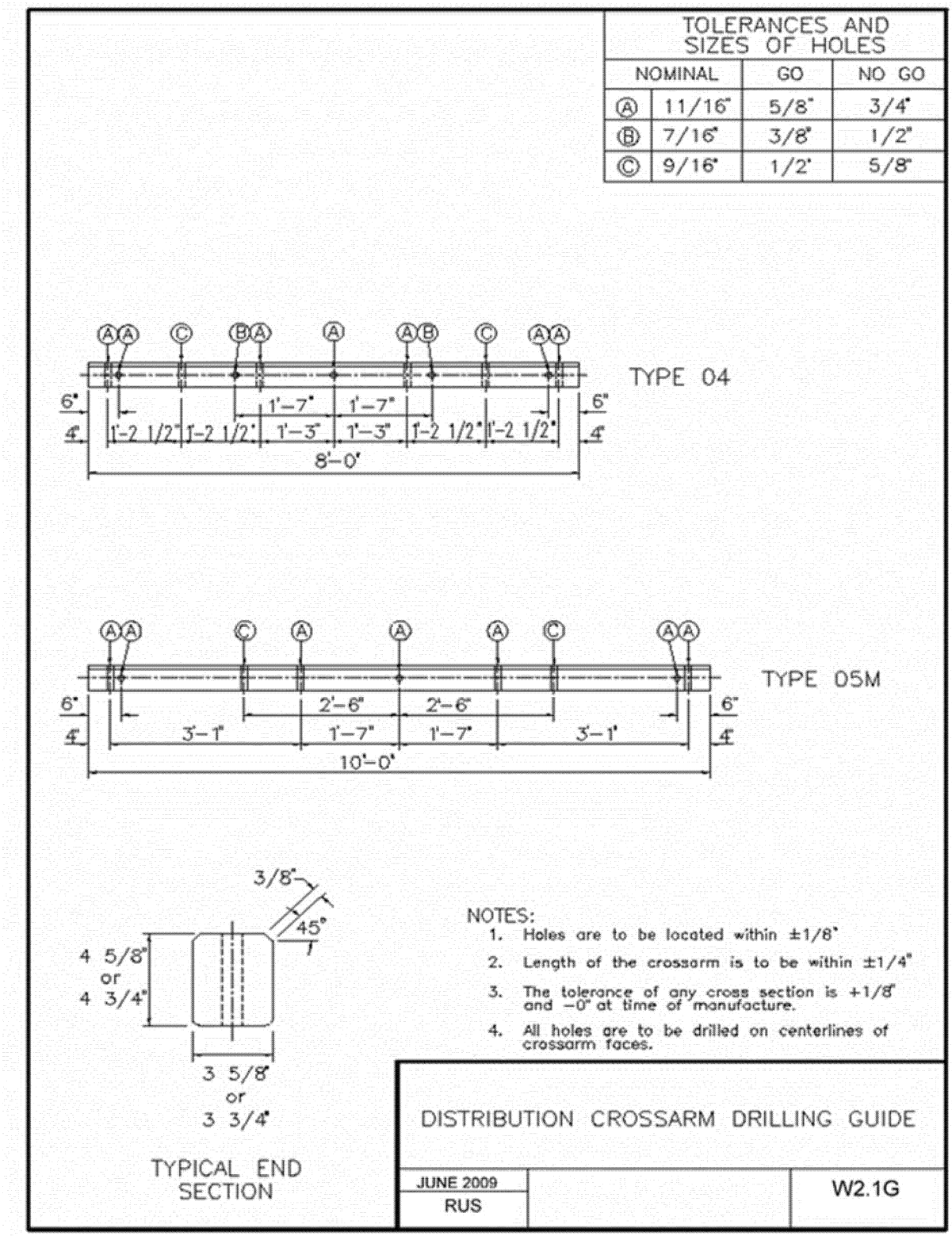

BILLING CODE 6355–01–C

■ 5. Revise § 1728.202 to read as follows:

§ 1728.202 Bulletin 1728H–702, Specification for Quality Control and Inspection of Timber Products.

(a) *Scope.* (1) The specification in this section describes the responsibilities and procedures pertaining to the quality control by producers and pertaining to inspection of timber products produced in accordance with the following RUS specifications in § 1728.201, and poles, covered in Bulletin 1728F–700 (incorporated by reference in § 1728.97) and in § 1755.97 of this chapter.

(2) Where there is conflict between the specification in this section and any other specification referred in this section, the specification in this section shall govern.

(3) The specification in this section also describes and designates responsibilities of RUS borrowers in regard to their purchases under the specifications referenced in paragraph (a)(1) of this section.

(b) *General stipulations.* (1) Conformance of poles and crossarms to RUS specifications is the responsibility of the producer. A member of the producer's staff shall be designated as quality control supervisor and charged with the responsibility for the exercise of proper quality control procedures throughout the production process. The primary responsibility of third party inspection agencies is to verify that producers involved in the manufacture of RUS treated wood products have functional in-house quality control systems in place that result in the shipment of materials meeting applicable RUS specification requirements to borrowers.

(2) The requirements of AWPA M3 (incorporated by reference at § 1728.97), pertaining to recordkeeping, pretreatment storage, analytical laboratories, plant gauges, and other plant facilities, shall be followed.

(3) Treated wood products intended for RUS borrowers shall not be inspected when in the opinion of the inspector, unsafe conditions are present.

(4) Poles and crossarms can be purchased under either of two purchase plans; a RUS approved Quality Assurance Plan or an Independent Inspection Plan. The method of inspection described in this section shall be used no matter which plan timber products are purchased under.

(5) Under the Independent Inspection Plan, the borrower should designate in the purchase order which inspection agency it has selected. Unless the borrower contracts for inspection as a separate transaction, the treating company shall obtain the services of the borrower's designated inspection agency. For reserve treated stock held in inventory by the producer, the producer shall obtain the services of the appropriate inspection program.

(6) All third-party inspectors involved in the inspection of RUS products shall maintain their impartiality when providing their inspection service. This requires that these individuals and their employers, as well as producers and suppliers involved in providing RUS borrowers with treated wood products, maintain the greatest degree of professional separation during the performance of their respective functions to eliminate any possible conflict of interest.

(7) With the exception of financial agreements for inspection services, inspection agencies shall not accept nor provide gratuities or free services to suppliers.

(8) Inspection agencies shall not offer product warranties on inspected material.

(9) Inspection agencies shall have and maintain liability insurance in the amount of $500,000 and a surety bond or miscellaneous Errors and Omission insurance for consequential damages for not less than $250,000. Evidence of compliance to the requirement in this paragraph (b)(9) shall be forwarded to the RUS annually. The evidence shall be in the form of a certificate of insurance or a Bond signed by a representative of the insurance or Surety Bonding company and include a provision that no change in, or cancellation of, will be made without the prior written notice to Chairman, Technical Standards Committee ''A'' (Electric).

(10) Inspection agencies shall maintain their own properly equipped laboratory that, at a minimum, is able to run the referee methods listed in table 1 to this paragraph (b)(10) for retention analysis for all preservatives being inspected. This laboratory shall be independent from any treating plant laboratory. Inspection Agencies may use one central laboratory. All XRF units maintained by third party inspection agencies as part of their RUS required laboratories shall be calibrated at least quarterly by said agency utilizing the referee method for each preservative treatment being analyzed or via comparison with a set of graduated treated wood standards. Each agency shall keep an up-to-date written record of these quarterly calibration results. AWPA A83 (incorporated by reference at § 1728.97) shall be followed for Pentachlorophenol testing, AWPA A6 (incorporated by reference at § 1728.97) shall be followed for Creosote testing and AWPA A9 (incorporated by reference at § 1728.97) shall be followed for XRF be followed, as illustrated in the following table:

TABLE 1 TO PARAGRAPH (b)(10)

Preservative	Referee method
Pentachlorophenol	Lime Ignition, Copper Pyridine.
Creosote	Toluene Extraction.
Waterborne	X-ray fluorescence (XRF).
Copper Naphthenate.	X-ray fluorescence (XRF).

(11) If used for analysis, plant XRF units shall be accurate and generate reproducible results per AWPA A9. At least once monthly, their accuracy and precision shall be checked by the third-party inspector. This verification shall consist of the inspector taking a retention sample previously analyzed by the plant quality control supervisor on-site and rerunning it in the inspection agency's own laboratory using said agency's XRF unit or the referee method for a specific preservative. If the inspection agency's analytical result is within +5% of the plant's retention result on that sample, the plant XRF unit needs no further calibration.

(12) Individual inspectors in the employ of inspection agencies shall be properly trained and experienced. See § 1728.203, for details of an inspector's minimum qualifications. Upon request, inspection agencies must provide RUS with detailed written documentation verifying that each of their employees inspecting RUS materials has the minimum experience and training described in § 1728.203. Failure of an individual inspector to follow proper procedures or failure of an inspection agency to properly train and supervise their inspectors or follow applicable RUS specifications constitutes grounds for RUS debarment of said inspector and said inspection agency from future inspection of RUS financed material.

(c) *Quality control and inspection procedures.* It is the responsibility of the plant quality control supervisor to perform the following procedures to ensure that a particular lot of material conforms to the requirements of the applicable Agency specification prior to treatment. After the plant quality control supervisor has performed these procedures, a particular lot of material shall be released to the inspector for verification of conformance.

(1) For poles, inspection prior to treatment shall include:

(i) Ample space and assistance shall be provided by the treating plant for handling and turning poles. Regardless of the purchase plan poles are being purchased under, all poles in a lot shall

be inspected by the plant quality control supervisor prior to offering the lot for verification by a third party.

(ii) When limited by the purchaser in a written purchase order, moisture content shall be measured with a calibrated electronic moisture meter. Calibration of the moisture meter shall include not only the zero settings for the X and Y readings, but also two resistance standards for 12 and 22 percent moisture content. Material failing to conform for moisture content may be retested upon request after recalibration of the moisture meter.

(iii) Dimensions, length, and circumference shall be measured by a standard steel tape to determine that they meet specification requirements and that they agree with the details for class and length found in the face brand/tag and butt of each pole. If it is obvious by visual comparison with a measured pole that the brand information regarding class and length is correct, individual poles need not be measured. Pole circumference dimensions measured prior to treatment shall govern acceptance. Reduction in dimension due to treatment and shipping shall be no more than 2 percent below the minimum for the pole class.

(iv) Poles in a lot shall be of the same seasoning condition and all shall be inspected for decay. If the plant quality control supervisor suspects that decay is present in a pole, a slice from both ends shall be cut for closer examination. If 3 percent or more of the poles in the lot inspected by the plant quality control supervisor show evidence of decay, the entire lot shall be unconditionally withdrawn without further sorting.

(v) Under the Independent Inspection Plan, all poles shall be examined by the third-party Inspector for verification of conformance. Under a RUS approved Quality Assurance Plan, the number of poles inspected for verification of conformance may vary according to the terms of the approved plan.

(vi) Whenever it becomes evident during third party inspection of any lot of poles offered by the producer that non-conforming pieces exceed 3 percent for any one defect or 5 percent for all defects, the inspector shall withhold further inspection and reject the balance of the lot. After the producer has acted to eliminate all defective pieces, the rejected balance may be inspected as a new lot. Sorting, however, shall not be permitted when a lot has been rejected for decay.

(vii) Re-examination for mechanical damage or deterioration and for original acceptance shall be conducted on timber products not treated within 10 days after the original third-party inspection.

(2) For crossarms, inspection prior to treatment shall include:

(i) Regardless of the purchase plan arms are being purchased under, all arms in a lot shall be inspected by the plant quality control supervisor prior to offering the lot for verification by a third party. *After* the plant quality control supervisor has performed the procedures in paragraphs (c)(2)(ii) through (vii) of this section, a particular lot of arms shall be released to the inspector for verification of conformance.

(ii) Moisture content of the arms in the lot shall be checked with a calibrated moisture meter.

(iii) Surface inspection of both ends and the side surfaces of each arms. Particular attention shall be paid to visible defects such as compression wood, red heart, honeycomb and other forms of decay, shakes, splits, through checks, low density, wane, undersize, and pitch pockets.

(iv) Inspection of bolt and insulator pin holes for proper location, dimension and excessive splintering.

(v) Inspection of brands for proper location, required content and legibility.

(vi) Under the Independent Inspection, both ends of all crossarms and a random representative sample of the lengthwise side faces of all crossarms shall be inspected. The sample size shall equal 20 percent of the lot size or 200 arms, whichever is smaller. Under a RUS approved Quality Assurance Plan, the number of crossarms inspected for verification of conformance may vary according to the terms of the approved plan.

(vii) Whenever it becomes evident during third party inspection of any lot of arms offered by the producer that non-conforming pieces exceed 2 percent of the sample size, the entire lot shall be rejected. After the producer has acted to eliminate all defective pieces, the rejected balance may be inspected as a new lot.

(d) *Preservatives.* Creosote, waterborne preservatives, pentachlorophenol and copper naphthenate shall conform to current AWPA U1 (incorporated by reference in § 1728.97).

(e) *Results of treatment—Poles.* (1) Following treatment, poles shall be sampled for preservative retention and penetration utilizing a calibrated increment borer 0.2 inches +0.02 inches in diameter in accordance with procedures listed in AWPA M2 (incorporated by reference in § 1728.97).

(2) Inspectors may take their own retention samples and analyze them concurrently with those taken by the quality control supervisor, but each shall work independently. The results of the plant's analysis shall be presented before verification and acceptance of the charge by the third-party inspector.

(3) Unless otherwise specified, borings shall be taken from the section of the pole extending from 1 foot below the face brand/tag to 1 foot above the face brand/tag. For pressure treated Western Red Cedar, Alaska Yellow Cedar and all butt treated poles, borings shall be taken from the section of the pole approximately 1 foot below groundline.

(4) For all species, core samples shall be taken from 20 poles in charges of 20 or more poles. If a charge consists of less than 20 poles, each pole shall be bored and then individual poles shall be bored a second time to obtain a minimum of 20 core samples. Any additional borings required to obtain the required 20 core samples shall be taken in a manner that represents the lot of material with respect to variations in size, seasoning condition, or other features that may affect the results of treatment.

(5) Retention and penetration samples shall consist of borings representative of pole volumes for each class and length in the charge, as illustrated in the following table:

TABLE 2 TO PARAGRAPH (e)(5)

Number of poles	Class/length	Vol. in ft³	% of total vol.	Number of borings [1]
20	5/40	550	22	4
30	4/40	840	34	7
20	4/45	510	20	4
20	3/45	600	24	5

TABLE 2 TO PARAGRAPH (e)(5)—Continued

Number of poles	Class/length	Vol. in ft^3	% of total vol.	Number of borings [1]
Total		2,500		

[1] Retention and penetration requirements for each different species and preservative are listed in Table 10 of Appendix A, RUS Bulletin 1728F–700, Specification for Wood Poles, Stubs and Anchor Logs (incorporated by reference at § 1728.97).

(6) Preservative retention analyses shall be performed per the standard AWPA U1, (incorporated by reference at § 1728.97).

(7) Penetration compliance of both poles and crossarms shall be determined in accordance with the standard AWPA A15 (incorporated by reference at § 1728.97). Chrome Azurol S and Penta-Check shall be used to determine the penetration of copper containing preservatives and penta, respectively.

(8) All bored holes created by penetration and retention sampling shall be promptly filled with tight fitting treated plugs.

(9) Penetration sampling of poles shall be carried out as follows:

(i) Group A poles (Those poles with a circumference of 37.5 inches or less at 6 feet from butt.):

(A) Bore 20 poles or 20 percent of the poles in the charge, whichever is greater. Accept all poles in the charge for penetration if every boring in the sample conforms. If any sample fails penetration, bore all poles in the charge.

(B) If more than 15% of the poles in the charge are found to be nonconforming, the entire charge shall be retreated. If 15% or less are found to be nonconforming, remove and retreat only those that are nonconforming.

(ii) Group B poles (Those poles with a circumference greater than 37.5 inches at 6 feet from the butt.):

(A) For Group B poles 45 feet and under, bore each pole in the charge. If more than 15% of these poles are found to be nonconforming, the entire charge shall be retreated. If 15% or less are found to be nonconforming, remove and retreat only those that are nonconforming.

(B) For Group B poles 50 feet and over, bore each pole twice at 90 degrees apart and accept only those poles conforming to penetration in both borings.

(iii) Nonconforming poles may be treated only twice. The letter ''R'' shall be added to the original charge number in the butts of all poles that are retreated. Poles failing to meet treatment requirements after two retreatments shall be permanently rejected and all brand and butt information removed.

(f) *Results of treatment—Crossarms.* Retention and penetration samples shall be taken from not less than 20 crossarms in each charge. The sampling method and retention and penetration requirements for both Douglas-fir and Southern Yellow Pine crossarms are listed in § 1728.201.

(g) *Product acceptance.* (1) Third party inspectors shall verify their acceptance of untreated poles that have been offered by the producer as conforming by marking each accepted piece in the tip with a clear, legible hammer stamp. Following treatment, inspectors shall verify their acceptance of treated poles that have been offered by the producer as conforming by marking each accepted piece in the butt with a clear, legible hammer stamp. Inspection marks are not to be placed in the butt surfaces of any poles prior to treatment and proper retention analysis and penetration testing being completed. The inspector shall personally mark each piece for acceptance and shall not delegate this responsibility to any other individual.

(2) Each inspector or inspection agency shall retain for a period of at least one year a copy or transcript of each pre-treatment inspection report and a copy of analytical worksheets covering retention and penetration test results for each treated charge of material inspected. On request, a copy or transcript of these reports shall be furnished to the Chairman, Technical Standards Committee ''A'', Rural Utilities Service, Washington, DC 20250–1569.

(i) On each inspection report the third-party inspector and the plant quality control supervisor shall certify in writing that the material listed on the report has been properly inspected both before and after treatment and that the preservative used met the requirements of this section. Inspection reports shall also include the following information:

(A) Conditioning details of the material prior to treatment.

(B) Total number of pieces offered by the producer.

(C) Number of pieces rejected by the inspector, cause for rejection.

(D) Copy of preservative analysis (usually supplied by the preservative supplier).

(E) Treating sheet containing details of treatment for each charge.

(F) Separate worksheets for retention analyses done by the plant quality control supervisor and by the inspector.

(G) Penetration result on each individual core boring taken from poles in the charge.

(ii) [Reserved]

(h) *Laminated materials.* (1) All lumber used to fabricate laminated materials shall be inspected and its grade verified by a qualified lumber grader, then marked appropriately.

(2) Laminated materials shall comply with manufacturing requirements specified in ANSI O5.2 (incorporated by reference at § 1728.97). Melamine urea adhesives shall not be used. Plant quality control procedures and any third-party inspection shall be conducted in accordance with AITC 200 (incorporated by reference at § 1728.97), and § 1728.201 (Bulletin 1728H–701).

(3) Following treatment, laminated material shall be checked for proper preservative retention and penetration, and for any evidence of delamination. All conforming laminated materials shall be clearly marked with either an American Institute of Timber Construction (AITC) or American Plywood Association (APA) quality stamp.

(i) *Safety provisions.* Poles intended for agency borrowers shall not be inspected when, in the opinion of the inspector, unsafe conditions are present.

■ 6. Add § 1728.203 to read as follows:

§ 1728.203 Inspector's qualifications.

Inspection agencies must assure borrowers that employees assigned to the inspection of timber products and preservative treatments are competent and experienced. In general, any of the following examples are considered as minimum qualifying experience before an individual may be permitted to inspect timber products for borrowers:

(a) Three years of direct experience inspecting untreated and treated utility products; or

(b) Three years of direct experience conducting in-plant quality control work at a treating plant producing treated utility products; or

(c) Under the direct supervision of an experienced, qualified inspector, the individual shall have performed the following:

(1) For poles, inspected at least 10,000 individual untreated poles, and checked preservative penetration on at least 3,000 individual poles;

(2) For crossarms, inspected at least 5,000 individual untreated arms and checked penetration on at least 500 individual arms;

(3) Conducted at least 100 retention assays, including at least 25 analyses for each different preservative treatment being inspected.

(d) In both paragraphs (a) and (b) of this section, the experience should be not less than that required in paragraph (c) of this section.

(e) Individuals involved in the inspection of more than one commodity must have the minimum experience required in paragraph (c) of this section for each respective product.

PART 1755—TELECOMMUNICATIONS POLICIES ON SPECIFICATIONS, ACCEPTABLE MATERIALS, AND STANDARD CONTRACT FORMS

■ 7. The authority citation for part 1755 continues to read as follows:

Authority: 7 U.S.C. 901 *et seq.,* 1921 *et seq.,* 6941 *et seq.*

■ 8. Revise § 1755.97 to read as follows:

§ 1755.97 Telephone standards and specifications.

(a)(1) Certain material is incorporated by reference into this part with the approval of the Director of the Federal Register under 5 U.S.C. 552(a) and 1 CFR part 51. All approved material is available for inspection at the Rural Utilities Service, U.S. Department of Agriculture, Room 5170–S, Washington, DC 20250–1522, call (202) 720–8674 and is available as listed in this section. It is also available for inspection at the National Archives and Records Administration (NARA). For information on the availability of these materials at NARA, call (202) 741–6030 or go to: *www.archives.gov/federal-register/cfr/ibr-locations.html.*

(2) To comply with the provisions of this part, you must follow the requirements set out in the RUS telecommunications bulletins incorporated by reference. These materials are incorporated as they exist on the date of the approval and notification of any change in these materials will be published in the **Federal Register**. The terms ''RUS form'', ''RUS standard form'', ''RUS specification'', and ''RUS bulletin'' have the same meaning as the terms ''REA form'', ''REA standards form'', ''REA specification'', and ''REA bulletin'', respectively, unless otherwise indicated. For information on other standards incorporated by reference into this part see § 1755.901.

(b) Rural Utilities Service, U.S. Department of Agriculture, Room 5170–S, U.S. Department of Agriculture, Washington, DC 20250, *https://www.rd.usda.gov/publications/regulations-guidelines/bulletins.*

(1) Bulletin 345–39, RUS specification for telephone station protectors, August 19, 1985.

(2) Bulletin 345–50 PE–60, RUS specification for trunk carrier systems, September 1979.

(3) Bulletin 345–54 PE–52, RUS specification for telephone cable splicing connectors, December 1971.

(4) Bulletin 345–55 PE–61, RUS specification for central office loop extenders and loop extender voice frequency repeater combinations, December 1973.

(5) Bulletin 345–65, PE–65, Specification for shield bonding connectors, March 22, 1985.

(6) Bulletin 345–66 PE–64, RUS specification for subscriber carrier systems, September 1979.

(7) Bulletin 345–69 PE–29, RUS specification for two-wire voice frequency repeater equipment, January 1978.

(8) Bulletin 345–72 PE–74, RUS specification for filled splice closures, October 1985.

(9) Bulletin 345–78 PE–78, RUS specification for carbon arrester assemblies for use in protectors, February 1980.

(10) Bulletin 345–180 Form 397a, RUS specifications for voice frequency repeaters and voice frequency repeatered trunks, January 1963.

(11) Bulletin 345–183 Form 397d, RUS design specifications for point-to-point microwave radio systems June 1970.

(12) Bulletin 345–184 Form 397e, RUS design specifications for mobile and fixed dial radio telephone equipment May 1971.

(13) Bulletin 1728F–700, RUS Specification for Wood Poles, Stubs and Anchor Logs, April 15, 2019.

(14) Bulletin 1753F–150 Form 515a, Specifications and Drawings for Construction of Direct Buried Plant, September 30, 2010.

(15) Bulletin 1753F–151 Form 515b, Specifications and Drawings for Construction of Underground Plan, September 12, 2001.

(16) Bulletin 1753F–152 Form 515c, Specifications and Drawings for Construction of Aerial Plant, September 17, 2001.

(17) Bulletin 1753F–153 Form 515d, Specifications and Drawings for Service Installation at Customer Access Locations, September 17, 2001.

■ 9. Amend § 1755.98 by revising the table to read as follows:

§ 1755.98 List of telecommunications specifications included in other 7 CFR parts.

* * * * *

Section	Issue date	Title
(a) 1728.202	April 15, 2019	RUS Specification for Quality Control and Inspection of Timber Products.
(b) [Reserved].		

Chad Rupe,

Administrator, Rural Utilities Service.

[FR Doc. 2019–12238 Filed 6–17–19; 8:45 am]

BILLING CODE P

DEPARTMENT OF AGRICULTURE

Animal and Plant Health Inspection Service

9 CFR Part 79

[Docket No. APHIS–2007–0127]

RIN 0579–AC92

Scrapie in Sheep and Goats; Correction

AGENCY: Animal and Plant Health Inspection Service, USDA.

ACTION: Correcting amendment.

SUMMARY: In a final rule that was published in the **Federal Register** on March 25, 2019, and effective on April 24, 2019, we amended the regulations by changing the requirements for records needed to trace animals and by adding provisions to link official individual animal identification applied by persons other than the flock owner to the flock of origin in the National Scrapie Database rather than just the person who applied the official identification. This document corrects an error in that final rule.

DATES: Effective June 18, 2019.

FOR FURTHER INFORMATION CONTACT: Dr. Diane Sutton, National Scrapie Program Coordinator, Sheep, Goat, Cervid & Equine Health Center, Strategy and Policy, VS, APHIS, 4700 River Road, Unit 43, Riverdale, MD 20737–1235; (301) 851–3509.

SUPPLEMENTARY INFORMATION: On March 25, 2019, we published in the **Federal Register** (84 FR 11170–11196, Docket No. APHIS–2007–0127) a final rule that amended the regulations in parts 54 and 79 by changing the requirements for records needed to trace animals, and by adding provisions to link official individual animal identification applied by persons other than the flock owner to the flock of origin in the National Scrapie Database rather than just the person who applied the official identification. As part of this change, we added some paragraphs to § 79.6(a) and redesignated others. Specifically, § 79.6(a)(10)(i) was redesignated as § 79.6(a)(12). However, in § 79.2(a)(1), footnote 4 refers to the identification requirements in § 79.6(a)(10)(i), and we did not update the reference in the footnote to reflect that change. This document corrects that error.

List of Subjects in 9 CFR Part 79

Animal disease, Goats, Quarantine, Reporting and recordkeeping requirements, Sheep, Transportation.

Accordingly, we are amending 9 CFR part 79 as follows:

PART 79—SCRAPIE IN SHEEP AND GOATS

■ 1. The authority citation in part 79 continues to read as follows:

Authority: 7 U.S.C. 8301–8317; 7 CFR 2.22, 2.80, and 371.4.

§ 79.2 [Amended]

■ 2. In § 79.2, footnote 4 is amended by removing the citation ''§ 79.6(a)(10)(i)'' adding the citation ''§ 79.6(a)(12)'' in its place.

Done in Washington, DC, this 13th day of June 2019.

Kevin Shea,

Administrator, Animal and Plant Health Inspection Service.

[FR Doc. 2019–12820 Filed 6–17–19; 8:45 am]

BILLING CODE 3410–34–P

FEDERAL HOUSING FINANCE AGENCY

12 CFR Part 1248

RIN 2590–AA94

Uniform Mortgage-Backed Security; Correction

AGENCY: Federal Housing Finance Agency.

ACTION: Final rule; correction.

SUMMARY: The Federal Housing Finance Agency (FHFA) is issuing this document to correct the preamble of the final rule that was published in the **Federal Register** on March 5, 2019, entitled ''Uniform Mortgage-Backed Security.'' In that preamble, FHFA incorrectly stated that data on servicer performance is included in quarterly Prepayment Monitoring Reports (PMRs).

DATES: Effective June 18, 2019.

FOR FURTHER INFORMATION CONTACT: Robert Fishman, Deputy Director, Division of Conservatorship, (202) 649–3527, *Robert.Fishman@fhfa.gov,* or James P. Jordan, Associate General Counsel, Office of General Counsel, (202) 649–3075, *James.Jordan@fhfa.gov.* These are not toll-free numbers.

SUPPLEMENTARY INFORMATION:

Correction

In the preamble to the final rule published on March 5, 2019 (84 FR 7793) FHFA stated that data on servicer performance is included in quarterly PMRs. Actually, data on servicer performance is not included in quarterly PRMs.

In FR Doc. 2019–03934 appearing on page 7793 in the **Federal Register** of Tuesday, March 5, 2019, make the following correction in the **SUPPLEMENTARY INFORMATION** section. On page 7798, in the left column, on lines 7 through 11, correct the sentence ''FHFA currently receives and monitors data that include information on servicer performance, and publishes that information in quarterly PMRs'' to read ''FHFA currently receives and monitors data that include information on servicer performance.''

Dated: June 11, 2019.

Mark A. Calabria,

Director, Federal Housing Finance Agency.

[FR Doc. 2019–12880 Filed 6–17–19; 8:45 am]

BILLING CODE 8070–01–P

DEPARTMENT OF TRANSPORTATION

Federal Aviation Administration

14 CFR Part 39

[Docket No. FAA–2019–0414; Product Identifier 2019–NE–15–AD; Amendment 39–19656; AD 2019–12–01]

RIN 2120–AA64

Airworthiness Directives; CFM International S.A. Turbofan Engines

AGENCY: Federal Aviation Administration (FAA), DOT.

ACTION: Final rule; request for comments.

SUMMARY: The FAA is adopting a new airworthiness directive (AD) for certain CFM International S.A. (CFM) LEAP–1B21, –1B23, –1B25, –1B27, –1B28, –1B28B1, –1B28B2, –1B28B3, –1B28B2C, –1B28BBJ1, and –1B28BBJ2 model turbofan engines. This AD requires initial and repetitive inspections of the transfer gearbox (TGB) scavenge screens and, depending on the results of the inspection, possible removal of the engine from service. This AD was prompted by multiple reports of in-flight shutdowns (IFSDs) due to radial drive shaft (RDS) bearing failure. The FAA is issuing this AD to address the unsafe condition on these products.

DATES: This AD is effective July 3, 2019.

The Director of the Federal Register approved the incorporation by reference of a certain publication listed in this AD as of July 3, 2019.

The FAA must receive comments on this AD by August 2, 2019.

ADDRESSES: You may send comments, using the procedures found in 14 CFR 11.43 and 11.45, by any of the following methods:

- *Federal eRulemaking Portal:* Go to *http://www.regulations.gov.* Follow the instructions for submitting comments.
- *Fax:* 202–493–2251.
- *Mail:* U.S. Department of Transportation, Docket Operations, M–30, West Building Ground Floor, Room W12–140, 1200 New Jersey Avenue SE, Washington, DC 20590.
- *Hand Delivery:* U.S. Department of Transportation, Docket Operations, M–30, West Building Ground Floor, Room W12–140, 1200 New Jersey Avenue SE, Washington, DC 20590, between 9 a.m. and 5 p.m., Monday through Friday, except Federal holidays.

For service information identified in this final rule, contact CFM International Inc., Aviation Operations Center, 1 Neumann Way, M/D Room 285, Cincinnati, OH 45125; phone: 877–432–3272; fax: 877–432–3329; email: *aviation.fleetsupport@ge.com.* You may view this service information at the FAA, Engine and Propeller Standards Branch, 1200 District Avenue, Burlington, MA 01803. For information on the availability of this material at the FAA, call 781–238–7759. It is also available on the internet at *http://www.regulations.gov* by searching for and locating Docket No. FAA–2019–0414.

Examining the AD Docket

You may examine the AD docket on the internet at *http://www.regulations.gov* by searching for and locating Docket No. FAA–2019–0414; or in person at Docket Operations between 9 a.m. and 5 p.m., Monday through Friday, except Federal holidays. The AD docket contains this final rule, the regulatory evaluation, any comments received, and other information. The street address for the Docket Operations is listed above. Comments will be available in the AD docket shortly after receipt.

FOR FURTHER INFORMATION CONTACT: Christopher McGuire, Aerospace Engineer, ECO Branch, FAA, 1200 District Avenue, Burlington, MA 01803; phone: 781–238–7120; fax: 781–238–7199; email: *chris.mcguire@faa.gov.*

SUPPLEMENTARY INFORMATION:

Discussion

The FAA learned of five commanded IFSD events that occurred on certain CFM LEAP–1B model turbofan engines beginning in August 2018. CFM's investigations identified debris on the TGB scavenge screen, A-sump screen, and other screens. Subsequently, CFM determined that these IFSD events were the result of inadequate oil flow to the RDS bearing, which caused the RDS bearing cage to fail. This condition, if not addressed, could result in failure of one or more engines, loss of thrust control, and loss of the airplane. The FAA is issuing this AD to address the unsafe condition on these products.

Related Service Information Under 1 CFR part 51

The FAA reviewed CFM Service Bulletin (SB) LEAP–1B–72–00–0222–01A–930A–D, Issue 007, dated May 17, 2019. The SB describes procedures for inspections of TGB scavenge screens and borescope inspection (BSI) of the RDS bearing. This service information is reasonably available because the interested parties have access to it through their normal course of business or by the means identified in the **ADDRESSES** section.

Other Related Service Information

The FAA reviewed CFM SB LEAP–1B–72–00–0256–01A–930A–D, Issue 003, dated May 17, 2019. The SB describes procedures for an optional BSI of the RDS bearing. CFM has cancelled this SB and transferred its content to CFM SB LEAP–1B–72–00–0222–01A–930A–D, Issue 007, dated May 17, 2019.

FAA's Determination

The FAA is issuing this AD because it evaluated all the relevant information and determined the unsafe condition described previously is likely to exist or develop in other products of the same type design.

AD Requirements

This AD requires initial and repetitive inspections of the TGB scavenge screens and, depending on the results of the inspection, possible removal of the engine from service.

Interim Action

The FAA considers this AD interim action. The manufacturer is currently developing a modification that will address the unsafe condition identified in this AD. Once this modification is developed, approved, and available, the FAA might consider additional rulemaking.

FAA's Justification and Determination of the Effective Date

An unsafe condition exists that requires the immediate adoption of this AD without providing an opportunity for public comments prior to adoption. The FAA has found that the risk to the flying public justifies waiving notice and comment prior to adoption of this rule. The affected CFM LEAP–1B model turbofan engines experienced multiple RDS bearing cage failures in the last five months resulting in five IFSDs. The TGB scavenge screens must be inspected before accumulating between 100–250 flight hours since new on the RDS bearing or within 50 FHs after the effective date of this AD to prevent the failure of the RDS bearing, which could lead to in-flight shutdown of both engines, loss of thrust control, and loss of the airplane. Therefore, the FAA finds good cause that notice and opportunity for prior public comment are impracticable. In addition, for the reason stated above, the FAA finds that good cause exists for making this amendment effective in less than 30 days.

Comments Invited

This AD is a final rule that involves requirements affecting flight safety and was not preceded by notice and an opportunity for public comment. However, the FAA invites you to send any written data, views, or arguments about this final rule. Send your comments to an address listed under the **ADDRESSES** section. Include the docket number FAA–2019–0414 and Product Identifier 2019–NE–15–AD at the beginning of your comments. The FAA specifically invites comments on the overall regulatory, economic, environmental, and energy aspects of this final rule. The FAA will consider all comments received by the closing date and may amend this final rule because of those comments.

The FAA will post all comments received, without change, to *http://www.regulations.gov,* including any personal information you provide. The FAA will also post a report summarizing each substantive verbal contact received about this final rule.

Regulatory Flexibility Act

The requirements of the Regulatory Flexibility Act (RFA) do not apply when an agency finds good cause pursuant to 5 U.S.C. 553 to adopt a rule without prior notice and comment. Because the FAA has determined that it has good cause to adopt this rule without notice and comment, RFA analysis is not required.

Costs of Compliance

The FAA estimates that this AD affects 136 engines installed on airplanes of U.S. registry.

The FAA estimates the following costs to comply with this AD:

ESTIMATED COSTS

Action	Labor cost	Parts cost	Cost per product	Cost on U.S. operators
Inspect TGB scavenge screens	1 work-hour × $85 per hour = $85	$0	$85	$11,560

Authority for This Rulemaking

Title 49 of the United States Code specifies the FAA's authority to issue rules on aviation safety. Subtitle I, section 106, describes the authority of the FAA Administrator. ''Subtitle VII: Aviation Programs'' describes in more detail the scope of the Agency's authority.

The FAA is issuing this rulemaking under the authority described in Subtitle VII, Part A, Subpart III, Section 44701: ''General requirements.'' Under that section, Congress charges the FAA with promoting safe flight of civil aircraft in air commerce by prescribing regulations for practices, methods, and procedures the Administrator finds necessary for safety in air commerce. This regulation is within the scope of that authority because it addresses an unsafe condition that is likely to exist or develop on products identified in this rulemaking action.

This AD is issued in accordance with authority delegated by the Executive Director, Aircraft Certification Service, as authorized by FAA Order 8000.51C. In accordance with that order, issuance of ADs is normally a function of the Compliance and Airworthiness Division, but during this transition period, the Executive Director has delegated the authority to issue ADs applicable to engines, propellers, and associated appliances to the Manager, Engine and Propeller Standards Branch, Policy and Innovation Division.

Regulatory Findings

This AD will not have federalism implications under Executive Order 13132. This AD will not have a substantial direct effect on the States, on the relationship between the national government and the States, or on the distribution of power and responsibilities among the various levels of government.

For the reasons discussed above, I certify that this AD:

(1) Is not a ''significant regulatory action'' under Executive Order 12866, and

(2) Will not affect intrastate aviation in Alaska.

List of Subjects in 14 CFR Part 39

Air transportation, Aircraft, Aviation safety, Incorporation by reference, Safety.

Adoption of the Amendment

Accordingly, under the authority delegated to me by the Administrator, the FAA amends 14 CFR part 39 as follows:

PART 39—AIRWORTHINESS DIRECTIVES

■ 1. The authority citation for part 39 continues to read as follows:

Authority: 49 U.S.C. 106(g), 40113, 44701.

§ 39.13 [Amended]

■ 2. The FAA amends § 39.13 by adding the following new airworthiness directive (AD):

2019–12–01 CFM International S.A.: Amendment 39–19656; Docket No. FAA–2019–0414; Product Identifier 2019–NE–15–AD.

(a) Effective Date

This AD is effective July 3, 2019.

(b) Affected ADs

None.

(c) Applicability

This AD applies to all CFM International S.A. (CFM) LEAP–1B21, –1B23, –1B25, –1B27, –1B28, –1B28B1, –1B28B2, –1B28B3, –1B28B2C, –1B28BBJ1, and –1B28BBJ2 model turbofan engines with radial drive shaft (RDS) bearing, part number (P/N) 92D08200 or P/N 92D08201, installed.

(d) Subject

Joint Aircraft System Component (JASC) Code 7260, Turbine Engine Accessory Drive.

(e) Unsafe Condition

This AD was prompted by multiple reports of in-flight shutdowns (IFSDs) due to RDS bearing cage failure. The FAA is issuing this AD to prevent failure of the RDS bearing. The unsafe condition, if not addressed, could result in failure of one or more engines, loss of thrust control, and loss of the airplane.

(f) Compliance

Comply with this AD within the compliance times specified, unless already done.

(g) Required Actions

(1) Inspect the transfer gearbox (TGB) 1 and TGB2 scavenge screens in accordance with the Accomplishment Instructions, paragraph 5.A.(1), of CFM Service Bulletin (SB) LEAP–1B–72–00–0222–01A–930A–D, Issue 007, dated May 17, 2019, as follows:

(i) For affected engines with engine serial number (ESN) 602499 and lower:

(A) After the RDS bearing accumulates 50 flight hours (FHs) since new but before accumulating 250 FHs since new, or within 50 FHs after the effective date of this AD, whichever occurs later, perform an initial inspection of the TGB1 and TGB2 scavenge screens.

(B) Thereafter, perform repetitive inspections of the TGB1 and TGB2 scavenge screens at intervals not exceeding 250 FHs since the last inspection.

(ii) For affected engines with ESN 602500 and higher:

(A) After the RDS accumulates 50 FHs since new but before accumulating 100 FHs since new, or within 50 FHs after the effective date of this AD, whichever occurs later, perform an initial inspection of the TGB1 and TGB2 scavenge screens.

(B) Thereafter, perform repetitive inspections of the TGB1 and TGB2 scavenge screens at intervals not exceeding 100 FHs since the last inspection.

(iii) Based on the results of these inspections, remove the engine from service or return the engine to service using the criteria in the Accomplishment Instructions, Paragraphs 5.A.(2) through 5.A.(5), of CFM SB LEAP–1B–72–00–0222–01A–930A–D, Issue 007, dated May 17, 2019.

(2) [Reserved]

(h) Optional Borescope Inspection (BSI)

(1) Once the RDS bearing has accumulated 1,000 FHs since new, you may perform a BSI of the RDS bearing in accordance with the Accomplishment Instructions, paragraphs 5.B.(1) through 5.B.(8), of CFM SB LEAP–1B–72–00–0222–01A–930A–D dated May 17, 2019. If the results of this BSI are ''satisfactory'' according to the criteria in the Accomplishment Instructions, paragraphs 5.B.(6)(g), of CFM SB LEAP–1B–72–00–0222–01A–930A–D, Issue 007, dated May 17, 2019, then you are not required to perform the repetitive inspections in paragraphs (g)(1)(i)(B) or (g)(1)(ii)(B) of this AD until the RDS bearing accumulates 4,250 FHs since new.

(2) [Reserved]

(i) Optional Terminating Action

(1) As an optional terminating action to the repetitive inspections required by paragraphs (g)(1)(i)(B) and (g)(1)(ii)(B) of this AD, you may perform a BSI of the RDS bearing in accordance with the Accomplishment Instructions, Paragraphs 5.B.(1) through 5.B.(8), of CFM SB LEAP–1B–72–00–0222–01A–930A–D, Issue 007, dated May 17, 2019 after the RDS bearing accumulates 3,750 FHs since new.

(i) If the results of the BSI are ''satisfactory'' using the criteria in Accomplishment Instructions, paragraph 5.B.(6)(g), of CFM SB LEAP–1B–72–00–0222–01A–930A–D, Issue 007, dated May 17, 2019, then you have met the repetitive inspection requirements of this AD and no further action is required.

(ii) If the results of the BSI are ''unsatisfactory'' using the criteria in Accomplishment Instructions, paragraph 5.B.(6)(g), of CFM SB LEAP–1B–72–00–0222–01A–930A–D, Issue 007, dated May 17, 2019, then you must continue the repetitive inspections required by paragraphs (g)(1)(i)(B) or (g)(1)(ii)(B) of this AD.

(2) [Reserved]

(j) Definition

For the purpose of this AD, ''flight hours (FHs) since new'' are the FHs accumulated on the RDS bearings on new engines delivered from production and on engines that have had the RDS bearing replaced during an engine shop visit.

(k) No Reporting Requirement

The reporting requirement in paragraph 5.A.(6) in CFM SB LEAP–1B–72–00–0222–01A–930A–D, Issue 007, dated May 17, 2019, is not required by this AD.

(l) Credit for Previous Actions

You may take credit for the inspections that are required by paragraph (g)(1) of this AD, if you performed those actions before the effective date of this AD using CFM SB LEAP–1B–72–00–0222–01A–930A–D, Issue 006, dated March 22, 2019, or an earlier revision. You may also take credit for the optional BSI in paragraphs (h)(1) or the optional terminating inspection in paragraph (i)(1) of this AD, if you performed that action before the effective date of this AD using CFM SB LEAP–1B–72–00–0256–01A–930A–D, Issue 002, dated May 6, 2019, or an earlier revision.

(m) Alternative Methods of Compliance (AMOCs)

(1) The Manager, ECO Branch, FAA, has the authority to approve AMOCs for this AD, if requested using the procedures found in 14 CFR 39.19. In accordance with 14 CFR 39.19, send your request to your principal inspector or local Flight Standards District Office, as appropriate. If sending information directly to the manager of the certification office, send it to the attention of the person identified in paragraph (n) of this AD. You may email your request to: *ANE-AD-AMOC@faa.gov.*

(2) Before using any approved AMOC, notify your appropriate principal inspector, or lacking a principal inspector, the manager of the local flight standards district office/certificate holding district office.

(n) Related Information

For more information about this AD, contact Christopher McGuire, Aerospace Engineer, ECO Branch, FAA, 1200 District Avenue, Burlington, MA, 01803; phone: 781–238–7120; fax: 781–238–7199; email: *chris.mcguire@faa.gov.*

(o) Material Incorporated by Reference

(1) The Director of the Federal Register approved the incorporation by reference (IBR) of the service information listed in this paragraph under 5 U.S.C. 552(a) and 1 CFR part 51.

(2) You must use this service information as applicable to do the actions required by this AD, unless the AD specifies otherwise.

(i) CFM Service Bulletin LEAP–1B–72–00–0222–01A–930A–D, Issue 007, dated May 17, 2019.

(ii) [Reserved]

(3) For CFM service information identified in this AD, contact CFM International Inc., Aviation Operations Center, 1 Neumann Way, M/D Room 285, Cincinnati, OH, 45125; phone: 877–432–3272; fax: 877–432–3329; email: *aviation.fleetsupport@ge.com.*

(4) You may view this service information at FAA, Engine & Propeller Standards Branch, 1200 District Avenue, Burlington, MA, 01803. For information on the availability of this material at the FAA, call 781–238–7759.

(5) You may view this service information that is incorporated by reference at the National Archives and Records Administration (NARA). For information on the availability of this material at NARA, call 202–741–6030, or go to: *http://www.archives.gov/federal-register/cfr/ibr-locations.html.*

Issued in Burlington, Massachusetts, on June 14, 2019.

Karen M. Grant,

Acting Manager, Engine & Propeller Standards Branch, Aircraft Certification Service.

[FR Doc. 2019–13022 Filed 6–17–19; 8:45 am]

BILLING CODE 4910–13–P

CONSUMER PRODUCT SAFETY COMMISSION

16 CFR Parts 1112 and 1238

[Docket No. CPSC–2018–0015]

Safety Standard for Stationary Activity Centers

AGENCY: Consumer Product Safety Commission.

ACTION: Final rule.

SUMMARY: The Consumer Product Safety Improvement Act of 2008 (CPSIA) requires the United States Consumer Product Safety Commission (CPSC) to adopt safety standards for durable infant or toddler products. To comply with the CPSIA, the Commission is issuing a safety standard for stationary activity centers (SACs). This rule incorporates by reference ASTM F2012–18$^{\varepsilon 1}$, *Standard Consumer Safety Performance Specification for Stationary Activity Centers* (ASTM F2012–18$^{\varepsilon 1}$). This rule also amends the regulations for third party conformity assessment bodies to include the safety standard for SACs in the list of notices of requirements (NORs).

DATES: The rule will become effective on December 18, 2019. The incorporation by reference of the publication listed in this rule is approved by the Director of the Federal Register as of December 18, 2019.

FOR FURTHER INFORMATION CONTACT: Keysha Walker, Office of Compliance and Field Operations, U.S. Consumer Product Safety Commission; 4330 East-West Highway, Bethesda, MD 20814; telephone: (301) 504–6820; email: *KWalker@cpsc.gov.*

SUPPLEMENTARY INFORMATION:

I. Background and Statutory Authority

Congress enacted the CPSIA (Pub. L. 110–314, 122 Stat. 3016), including the Danny Keysar Child Product Safety Notification Act, on August 14, 2008. Section 104(b) of the CPSIA requires the Commission to: (1) Examine and assess the effectiveness of voluntary consumer product safety standards for durable infant or toddler products, in consultation with representatives of consumer groups, juvenile product manufacturers, and independent child product engineers and experts; and (2) issue consumer product safety standards for durable infant or toddler products. 15 U.S.C. 2056a(b)(1). Any standard the Commission adopts under this mandate must be ''substantially the same as'' the voluntary standard, or more stringent than the voluntary standard if the Commission determines that more stringent requirements would further reduce the risk of injury associated with the product. *Id.* Section 104(f)(1) of the CPSIA defines the term ''durable infant or toddler product'' as ''a durable product intended for use, or that may be reasonably expected to be used, by children under the age of 5 years,'' and lists SACs as a durable infant or toddler product. *Id.* 2056a(f).

On June 19, 2018, the Commission issued a notice of proposed rulemaking (NPR), proposing to incorporate by reference the voluntary standard for SACs, ASTM F2012–18$^{\varepsilon 1}$, without modifications. 83 FR 28390. ASTM F2012–18$^{\varepsilon 1}$ is still the current version of the standard.

In this final rule, the Commission incorporates by reference ASTM F2012–18$^{\varepsilon 1}$, with no modifications, as the mandatory safety standard for SACs. CPSC staff consulted with manufacturers, retailers, trade organizations, laboratories, consumer advocacy groups, consultants, and the public to develop this standard, largely through the ASTM standard-development process. In addition, this final rule amends the list of NORs in 16 CFR part 1112 to include the standard for SACs. This rule is based on information in CPSC staff's briefing package, ''Staff's Draft Final Rule for Stationary Activity Centers Under the Danny Keysar Child Product Safety Notification Act,'' which is available on CPSC's website.

II. Product Description

ASTM F2012–18ε1 defines a SAC as ''a freestanding product intended to remain stationary that enables a sitting or standing occupant whose torso is completely surrounded by the product to walk, rock, play, spin or bounce, or all of these, within a limited range of motion.'' ASTM F2012–18ε1, section 3.1.12. This definition does not include doorway jumpers.

SACs are intended for children who are not yet able to walk, but who are able to hold up their heads unassisted. SACs vary in style and design complexity, but typically consist of a seat that is suspended from a frame by springs or supported from the bottom by a fixed base. ASTM F2012–18ε1 defines three types of SACs: Closed-base SACs, open-base SACs, and spring-supported SACs. The standard defines each of these terms, as follows:

- A closed-base SAC is ''a stationary activity center that does not allow the occupant's feet to contact the floor when the product is in any manufacturer's recommended use position'' (section 3.1.1.);
- an open-base SAC is ''a stationary activity center that allows the occupant's feet to contact the floor'' (section 3.1.7); and
- a spring-supported SAC is ''a stationary activity center in which the sitting or standing platform is supported from below or suspended from above by springs (or equivalent resilient members)'' (section 3.1.10).

III. Market Description

SACs typically range in price from $40 to $150, with spring-supported SACs typically ranging from $70 to $150. Some manufacturers produce multiple models, and several produce models that are similar in design, but with different accessories. SACs typically accommodate children who weigh less than 25 pounds and have a maximum height of 32 inches.

There were approximately 7.5 million [1] SACs in U.S. households with children under 5 years old in 2013, according to CPSC's 2013 Durable Nursery Product Exposure Survey. However, only about 4.1 million of these SACs were actually in use.[2]

CPSC staff identified 11 domestic firms that currently supply SACs to the U.S. market. These firms primarily specialize in manufacturing children's products. According to the U.S. Small Business Administration's (SBA) standards,[3] 7 of the 11 firms are small businesses. All seven firms manufacture SACs; staff did not identify any small domestic importers of SACs. Of the seven small manufacturers, three produce spring-supported SACs. The Juvenile Products Manufacturers Association (JPMA) certifies the SACs of all seven firms, which indicates that these SACs comply with the ASTM standard and undergo third party testing.

IV. Incident Data and Recalls

CPSC receives data about product-related injuries from several sources. One source is the National Electronic Injury Surveillance System (NEISS), from which CPSC may obtain estimates based on a probability sample, determined by sampling weights from NEISS hospitals projected to national estimates. Other sources include reports from consumers and others through the Consumer Product Safety Risk Management System (which also includes some NEISS data) and reports from retailers and manufacturers through CPSC's Retailer Reporting System—CPSC refers to these sources collectively as Consumer Product Safety Risk Management System data (CPSRMS).

CPSC staff reviewed the NEISS and CPSRMS databases for incidents involving SACs. For the NPR, staff reviewed incident data reported to have occurred between January 1, 2013 and September 30, 2017. For the final rule, staff updated this review to include incident data received from October 1, 2017 through February 20, 2019. This updated review includes additional incident data reported to have occurred between January 1, 2013 and September 30, 2017, as well as new incidents that occurred between October 1, 2017 and February 20, 2019. Because reporting is ongoing, the number of reported incidents may change. For both the NPR and updated data periods, the number of injuries associated with SACs treated in U.S. EDs was insufficient for staff to derive reportable national estimates.[4] For this reason, staff has not provided injury estimates. However, injuries associated with SACs treated in U.S. EDs are included in the total count of reported incidents presented below.

A. Fatalities

CPSC is not aware of any fatalities associated with SACs that occurred between January 1, 2013 and February 20, 2019.

B. Nonfatal Injuries

CPSC is aware of 4,035 nonfatal incidents related to SACs that reportedly occurred between January 1, 2013 and February 20, 2019. CPSC had received reports of 3,488 of these incidents at the time of the NPR; since the NPR, CPSC received 547 additional reports of SAC incidents that reportedly occurred between January 1, 2013 and February 20, 2019. Of the 4,035 total incidents, 359 reportedly resulted in injuries (CPSC had received reports of 304 of these injury incidents at the time of the NPR, and received 55 additional injury reports since the NPR). The remaining 3,676 incidents either did not result in injuries, or did not include sufficient information to determine whether an injury occurred (CPSC had received reports of 3,184 of these incidents at the time of the NPR, and received 492 additional reports since the NPR). Although these reports did not indicate that an injury occurred, many of the incident descriptions indicated the potential for a serious injury.

Of the 304 incidents that had reportedly resulted in injuries at the time of the NPR, 24 of the injured children were treated and released from a U.S. ED. A majority of the injured children suffered a fall, resulting in head injuries, limb fractures, and contusions. A few children treated in U.S. EDs suffered foot, leg, or pelvic bruising, or fractures or swelling while jumping in the product. One child had an allergic reaction to the product's finish or materials, and the limbs of two children became entrapped in the product. Among the remaining 280 injury reports, some identified the type of injury sustained, while others only mentioned an injury, but provided no specifics about the injury. Some of the commonly reported injuries were fractures, head injuries, concussions, teeth injury, abrasions, contusions, and lacerations.

Of the 55 injury incidents reported since the NPR, there were reports of head contusions; arm and leg contusions, abrasions, and lacerations; hand contusions, abrasions, lacerations, and blisters; finger entrapments; mouth lacerations; torso abrasions; a nose contusion; a torso abrasion; a leg fracture; and a skull fracture. Three children suffered allergic reactions to the product finish or material, and one

[1] 95% confidence interval between 6.2 million and 8.8 million.

[2] 95% confidence interval between 3.1 million and 5.2 million.

[3] Under SBA size standards, a SAC manufacturer is ''small'' if it has 500 or fewer employees, and an importer is ''small'' if it has 100 or fewer employees.

[4] According to NEISS publication criteria, an estimate must be 1,200 or greater, the sample size must be 20 or greater, and the coefficient of variation must be 33% or smaller.

child experienced a choking episode. Three children suffered multiple injuries.

The majority of reported incidents and injuries involved children between 6 months old and 11 months old. Of the 4,035 total incidents, 13 percent involved children under 6 months old; 60 percent involved children between 6 and 11 months old; 7 percent involved children between 12 and 17 months old; 1 percent involved children between 18 and 23 months old; and 18 percent did not report the age of the victim.[5] Of the 359 incidents that reportedly resulted in injuries, 20 percent involved children under 6 months old; 60 percent involved children between 6 and 11 months old; 6 percent involved children between 12 and 17 months old; 1 percent involved children between 18 and 23 months old; and 12 percent did not report the age of the victim.[6]

C. Hazard Patterns

The hazards reported in the new incidents are consistent with the hazard patterns staff identified in the incidents presented in the NPR. Table 1 lists the number and percentage of the 4,035 total reported incidents within each hazard pattern.

TABLE 1—REPORTED INCIDENTS BY HAZARD PATTERN

[January 1, 2013 to February 20, 2019]

Hazard	Number of incidents	Percentage of total incidents
Spring Issues	1,756	44
Problems with Toy Accessories	1,166	29
Strap Issues	513	13
Structural Integrity Problems	166	4
Problems with Seats/Seat Pads	136	3
Stability Issues	112	3
Design Issues	59	1
Electrical Problems	38	1
Miscellaneous/Other Problems	31	1
Multiple Problems	32	1
Unspecified/Unknown Problems	26	1
Total	4,035	[7] 101

Spring issues. These incidents involved problems with the springs that attach the seat of the SAC to the frame. A total of 1,756 incident reports CPSC received between January 1, 2013 and February 20, 2019 involved spring issues (CPSC received 1,617 of these reports before the NPR and 139 after the NPR). Thirty of these incidents reportedly resulted in injuries, including 1 injury treated in a U.S. ED (CPSC received 27 of these reports before the NPR and 3 after the NPR).

Problems with toy accessories. These incidents involved problems with the toy accessories attached to SACs, including detached small parts posing a choking hazard, toys striking children in the face, toys pinching or entrapping children's fingers, and laceration hazards caused by sharp edges or surfaces. A total of 1,166 incident reports CPSC received between January 1, 2013 and February 20, 2019 involved toy accessory issues (CPSC received 1,075 of these before the NPR and 91 after the NPR). Of these 1,166 incidents, 169 reportedly resulted in injuries, including 15 injuries treated in U.S. EDs (CPSC received 156 of these reports before the NPR and 91 after the NPR).

Strap issues. These incidents involved torn, fraying, twisted, or detached straps. Typically, the strap system on a SAC is attached to a support spring and serves as the primary means of support for most spring-supported SACs. If the strap fails, the SAC may be unsupported on one side and often results in a child falling. A total of 513 incident reports CPSC received between January 1, 2013 and February 20, 2019, involved strap issues (CPSC received 306 of these before the NPR and 207 after the NPR). Of these 513 incidents, 42 reportedly resulted in injuries, including one injury treated in a U.S. ED (CPSC received 30 of these reports before the NPR and 12 after the NPR).

Structural integrity problems. These incidents involved a problem with structural components, such as frame tube damage, broken battery cover tabs, loose screws or small parts, broken activity bars, and problems with locks, which led to product collapse, detachment of the top and bottom parts of the SAC, or failure of the height adjustment mechanism. A total of 166 incident reports CPSC received between January 1, 2013 and February 20, 2019, involved structural integrity issues (CPSC received 158 of these before the NPR and 8 after the NPR). Twelve of these incidents reportedly resulted in injuries (CPSC received all 12 of these reports before the NPR).

Problems with seats or seat pads. These incidents included stitching on the seat pad fraying or tearing; tabs used to attach the pad to the seat frame breaking, tearing, or separating; attachments disassembling and causing the seat pad to fall; inadequately constrictive leg openings; seat fabric detaching from pegs; ripped seat pads; and rough seat pad material. A total of 136 incident reports CPSC received between January 1, 2013 and February 20, 2019, involved seat or seat pad issues (CPSC received 122 of these before the NPR and 214 after the NPR). Thirteen of these incidents reportedly resulted in injuries (CPSC received 12 of these reports before the NPR and 1 after the NPR).

Stability issues. These incidents involved SACs leaning to one side, lifting off the floor, or tipping over during use. A total of 112 incident reports CPSC received between January 1, 2013 and February 20, 2019, involved stability issues (CPSC received 76 of these before the NPR and 36 after the NPR). Thirteen of these incidents reportedly resulted in injuries, including two injuries treated in U.S.

[5] Total does not sum to 100 percent due to rounding.

[6] Total does not sum to 100 percent due to rounding.

[7] Total does not sum to 100 percent due to rounding.

EDs (CPSC received four of these reports before the NPR and nine after the NPR).

Design issues. These incidents involved problems with the design of the SAC, such as entrapment of limbs or extremities, failure of the seat to contain a child, placement of structural components that made it easier for a child to get hurt during routine use, mold buildup in a wire compartment, the base of the product disassembling while a child jumped in it, and straps that loosen when a baby kicks them. A total of 59 incident reports CPSC received between January 1, 2013 and February 20, 2019, involved design issues (CPSC received 32 of these before the NPR and 27 after the NPR). Of these 59 incidents, 26 reportedly resulted in injuries, including two injuries treated in U.S. EDs (CPSC received 20 of these reports before the NPR and six after the NPR).

Electrical problems. These incidents involved melting, leaking, or corroded batteries, or failure of the circuit board on the product. A total of 38 incident reports CPSC received between January 1, 2013 and February 20, 2019, involved electrical issues (CPSC received 36 of these before the NPR and 2 after the NPR). Two of these incidents reportedly resulted in injuries (CPSC received both of these reports before the NPR).

Miscellaneous or other problems. These incidents involved the product falling from an elevated surface; a rough surface, sharp edges, or protrusions; problems with the paint or finish; problems with the product packaging; allergic reactions to the product; and a loose unraveling string. A total of 31 incident reports CPSC received between January 1, 2013 and February 20, 2019, involved miscellaneous or other issues (CPSC received 22 of these before the NPR and 9 after the NPR). Eighteen of these incidents reportedly resulted in injuries, including five injuries treated in U.S. EDs (CPSC received 13 of these reports before the NPR and 5 after the NPR).

Multiple problems. These incidents involved more than one of the hazard patterns listed above. CPSC staff could not determine the priority of the hazard patterns involved. A total of 32 incident reports CPSC received between January 1, 2013 and February 20, 2019, involved multiple issues (CPSC received 20 of these before the NPR and 12 after the NPR). Nine of these incidents reportedly resulted in injuries (CPSC received five of these reports before the NPR and four after the NPR).

Unspecified or unknown problems. These reports provided incomplete or unclear descriptions of the incident. A total of 26 incident reports CPSC received between January 1, 2013 and February 20, 2019, involved unspecified or unknown issues (CPSC received 24 of these before the NPR and 2 after the NPR). Twenty-five of these incidents reportedly resulted in injuries, mostly resulting from falls, and included 17 injuries treated in U.S. EDs (CPSC received 23 of these reports before the NPR and 2 after the NPR).

D. Recalls

In the preamble to the NPR, the Commission reported that one consumer-level recall between January 2013 and March 2018, involved a SAC.[8] The hazard that prompted the recall was a toy attachment on the SAC, which posed an impact hazard when it rebounded. The firm received 100 reports of incidents, including 61 reported injuries. The injuries included bruises and lacerations to the face, a 7-month-old child who sustained a lineal skull fracture, and an adult who sustained a chipped tooth. The recall involved 400,000 units in the United States. There have not been any additional consumer-level recalls of SACs since the NPR.

V. ASTM F2012–18$^{\varepsilon 1}$

A. History of ASTM F2012

ASTM F2012 addresses the hazard patterns associated with SACs. ASTM first approved and published the standard in 2000, as ASTM F2012–00, *Standard Consumer Safety Specification for Stationary Activity Centers.* ASTM has revised the standard several times since then. In the NPR, the Commission proposed to incorporate by reference the then-current version of the standard, ASTM F2012–118$^{\varepsilon 1}$, with no modifications. ASTM approved ASTM F2012–18$^{\varepsilon 1}$ on March 1, 2018, and published it in March 2018. ASTM F2012–18$^{\varepsilon 1}$ is still the current version of the standard.

B. Assessment of ASTM F2012–18$^{\varepsilon 1}$

ASTM F2012–18$^{\varepsilon 1}$adequately addresses the risk of injuries and deaths associated with SACs. The standard addresses multiple hazards, including the hazard patterns that make up the majority of incidents and injuries in the SAC incident data. ASTM F2012–18$^{\varepsilon 1}$ includes requirements to address the following hazards:

- Sharp edges and points;
- small parts;
- latching or locking mechanisms to prevent unintentional folding;
- openings;
- scissoring, shearing, and pinching;
- exposed coil springs;
- toy accessories sold with SACs;
- protective components;
- spring failures on spring-supported SACs;
- structural integrity;
- leg openings;
- stability (including tip overs and seat tilt); and
- motion resistance.

The standard also includes requirements for warning labels and instructional literature. On-product warning labels inform caretakers of the risks of strangulation and occupants falling from SACs; the potential severity of resulting injuries; and how to avoid these hazards. The instructions that accompany SACs also include these warnings, as well as developmental criteria to explain when to begin using the product and when to discontinue use.

ASTM F2012–18$^{\varepsilon 1}$ addresses the four primary hazard patterns associated with SACs in the incident data. These are: (1) Spring issues (44 percent of incidents); (2) problems with toy accessories (29 percent of incidents); (3) strap issues (13 percent of incidents); and (4) structural integrity problems (4 percent of incidents). This section discusses how ASTM F2012–18$^{\varepsilon 1}$ addresses each of these hazard patterns.

Spring issues. Spring issues typically involve SACs in which the activity tray and child hang from springs at multiple points. These incidents often involve one or more parts of the spring system failing, which can result in the child falling out of the SAC when it tilts, tips, topples, or leans from the manufacturer's recommended-use position. ASTM F2012–18$^{\varepsilon 1}$ addresses this hazard with a performance requirement that support springs withstand 100 drops from a 33-pound weight from a height of at least 1 inch. In addition, based on input from CPSC staff, ASTM F2012–18$^{\varepsilon 1}$ requires a secondary support for load-bearing springs, so that there is a redundant system to prevent the seat from falling if a spring fails. CPSC concludes that these requirements adequately address the spring issues indicated in the incident data.

Problems with toy accessories. The majority of reported problems with toy accessories involve detached small parts causing choking or gagging, toys striking children in the face, pinch or entrapment points created by small gaps, and lacerations from sharp edges. ASTM F2012–18$^{\varepsilon 1}$ addresses these hazards by requiring toy accessories for SACs, and their means of attachment, to meet relevant requirements in ASTM

[8] CPSC website link to the recalled product: *https://www.cpsc.gov/Recalls/2013/Kids-II-Recalls-Baby-Einstein-Activity-Jumpers/.*

F963–17, *Standard Consumer Safety Specification for Toy Safety* (ASTM F963). ASTM F963 includes requirements that address the hazards evident in the injury data, including choking, ingestion, and inhalation hazards from small objects; sharp edges, hazardous points, and hazardous projections; folding mechanisms and hinges; and entanglement and strangulation hazards from cords, straps, and elastics. CPSC concludes that ASTM F963 adequately addresses the majority of hazards related to toy accessories on SACs.

Strap issues. The strap system on a SAC supports the occupant's weight and allows the occupant to bounce. The strap system is the primary means of support for most spring-supported SACs. A typical spring-supported SAC includes a strap system that connects at the top to the frame structure, and at the bottom to the side or underside of the carrier, to support the occupant. The length of the strap system typically consists of an upper segment that serves as the frame support strap, a lower segment that serves as the occupant support strap, and a middle section that consists of a spring to allow the occupant to bounce. Because the strap system serves as the primary means of support for most spring-supported SACs, if the strap fails, the SAC may be unsupported on one side, resulting in a child falling. Incidents involving strap issues include torn, fraying, twisted, or detached straps.

To address this hazard, ASTM F2012–18$^{\varepsilon 1}$ requires dynamic and static loading at the seat of the product to evaluate the durability of the support structures for the seat. This testing also stresses the structural integrity components of the product, such as straps. The standard requires that the product show no failure of seams, material breakage, or changes of adjustments that could cause the product to not fully support the child. CPSC staff concludes that these provisions adequately address the strap issues indicated in the incident data.

As the NPR discussed, while preparing the NPR, CPSC staff learned of one product in which the occupant support strap frayed and broke because the strap rubbed against a metal buckle during normal use. The support structure durability requirements in ASTM F2012–18$^{\varepsilon 1}$ do not address this scenario. On April 27, 2018, CPSC staff requested that ASTM address this hazard scenario, and ASTM created a task group to review the issue. The NPR requested comments about this issue, but CPSC received none. CPSC staff is participating in the ASTM task group, and the task group is making progress toward developing a requirement to address fraying straps. In this final rule, the Commission is not adopting an additional requirement to address this hazard because: (1) The ASTM task group has made progress toward developing a requirement to address fraying straps; (2) CPSC is aware of only one product that involved this issue; and (3) the one product has been redesigned with parts that will not cause the strap to fray.

Structural integrity problems. Incidents involving structural integrity problems include frame tube damage; loose screws; broken activity bars; and problems with locks that lead to the product collapsing, the top and bottom parts of the product detaching, or the height adjustment mechanism failing. To address these issues, ASTM F2012–18$^{\varepsilon 1}$ requires dynamic and static loading at the seat of the SAC to evaluate the durability of the support structures for the seat. This testing also stresses the structural integrity components of the SAC. The standard requires that the product show no failure of seams, material breakage, or changes of adjustments that could cause the product to not fully support the occupant. CPSC concludes that these requirements are adequate to address the structural integrity issues indicated in the incident data.

VI. Comments Filed in Response to the NPR

CPSC received two comments in response to the NPR. The comments are available in the docket for this rulemaking, CPSC–2018–0015, at: *www.regulations.gov.*

The first comment, from JPMA (a national non-profit trade association that represents producers, importers, and distributors of childcare articles), expressed support for the proposed rule and CPSC staff's collaboration with ASTM. The second comment also expressed general support for the proposed rule, but stated that there should be oversight of small manufacturers and importers. It appears that the commenter misunderstood the Regulatory Flexibility Act (RFA) analysis to mean that the rule would not apply to small entities; this is incorrect. The rule applies to all manufacturers and importers of SACs sold in the United States.

VII. Incorporation by Reference

The Office of the Federal Register (OFR) has regulations regarding incorporation by reference. 1 CFR part 51. These regulations require the preamble to a final rule to summarize the material the agency is incorporating by reference, discuss how the material is reasonably available to interested parties, and explain how to obtain the material. 1 CFR 51.5(b). This section summarizes ASTM F2012–18$^{\varepsilon 1}$, and describes how to obtain a copy of the standard.

ASTM F2012–18$^{\varepsilon 1}$ contains test methods and requirements regarding:

- Sharp edges or points;
- small parts;
- latching or locking mechanisms to prevent unintentional folding;
- openings;
- scissoring, shearing, or pinching;
- exposed coil springs;
- toy accessories sold with SACs;
- protective components;
- spring failures on spring-supported SACs;
- structural integrity;
- leg openings;
- stability (including tip overs and seat tilt);
- motion resistance;
- warnings and labels; and
- instructional literature.

Interested parties may obtain a copy of ASTM F2012–18$^{\varepsilon 1}$ from ASTM, through its website (*http://www.astm.org*), or by mail from ASTM International, 100 Bar Harbor Drive, P.O. Box 0700, West Conshohocken, PA 19428. Alternatively, interested parties may inspect a copy of the standard at CPSC's Division of the Secretariat.

VIII. Final Rule

Section 1238.2 of the final rule requires SACs to comply with ASTM F2012–18$^{\varepsilon 1}$ and incorporates the standard by reference. Section VII of this preamble describes the OFR requirements for incorporating material by reference. To comply with those requirements, section VII summarizes ASTM F2012–18$^{\varepsilon 1}$, explains how the standard is reasonably available to interested parties, and indicates how to obtain a copy of the standard.

The final rule also amends 16 CFR part 1112 to add a new § 1112.15(b)(48) that lists 16 CFR part 1238, *Safety Standard for Stationary Activity Centers,* as a children's product safety rule for which the Commission has issued an NOR. Section XV of this preamble provides additional information about certifications and NORs.

IX. Effective Date

The Administrative Procedure Act (5 U.S.C. 551–559) generally requires that agencies set an effective date for a final rule that is at least 30 days after the **Federal Register** publishes the final rule. *Id.* 553(d). The NPR proposed that the final rule for SACs, and the

amendment to part 1112, would take effect 6 months after publication. CPSC did not receive any comments about this timeline. Six months is generally enough time for firms to modify their products to meet a new standard, it is consistent with other CPSIA section 104 rules, and JPMA typically allows six months for products in its certification program to shift to a new standard. For these reasons, this rule will take effect 6 months after publication in the **Federal Register**, and will apply to products manufactured or imported on or after that date.

X. Paperwork Reduction Act

This rule contains information collection requirements that are subject to public comment and Office of Management and Budget (OMB) review under the Paperwork Reduction Act of 1995 (PRA; 44 U.S.C. 3501–3521). Under the PRA, CPSC must estimate the ''burden'' associated with each ''collection of information.'' 44 U.S.C. 3506(c).

In this rule, section 8 of ASTM F2012–18$^{\varepsilon 1}$ contains labeling requirements that meet the definition of ''collection of information'' in the PRA. *Id.* 3502(3). In addition, section 9 of ASTM F2012–18$^{\varepsilon 1}$ requires instructions be provided with SACs; however, CPSC staff believes this requirement can be excluded from the PRA burden estimate. OMB allows agencies to exclude from the PRA burden estimate any ''time, effort, and financial resources necessary to comply with a collection of information that would be incurred by persons in the normal course of their activities,'' if the disclosure activities required to comply are ''usual and customary.'' 5 CFR 1320.3(b)(2). CPSC staff is not aware of SACs that require use or assembly instructions but lack such instructions, so staff believes that providing instructions with SACs is ''usual and customary.'' For this reason, the burden estimate includes only the labeling requirements.

The preamble to the NPR discussed the information collection burden of the proposed rule and requested comments on the accuracy of CPSC's estimates. 83 FR 28395. CPSC did not receive any comments about the information collection burden of the proposed rule. The information collection burden has not changed since the NPR. The estimated burden of this collection of information is as follows:

TABLE 2—ESTIMATED ANNUAL REPORTING BURDEN

16 CFR section	Number of respondents	Frequency of responses	Total annual responses	Hours per response	Total burden hours
1238.2	11	4	44	1	44

CPSC staff is aware of 11 suppliers of SACs to the U.S. market. This estimated reporting burden assumes that all 11 suppliers may need to modify their labels to comply with the final rule. CPSC staff estimates that it will take about one hour per model to make these modifications and, based on staff's evaluation of product lines, that each firm supplies an average of four models of SACs. Therefore, CPSC staff estimates that the burden associated with the labeling requirements is: 11 entities × 1 hour per model × 4 models per entity = 44 hours. CPSC staff estimates that the hourly compensation for the time required to create and update labels is $34.50 (U.S. Bureau of Labor Statistics, ''Employer Costs for Employee Compensation,'' Dec. 2018, total compensation for all sales and office workers in goods-producing private industries: *http://www.bls.gov/ncs/*). Therefore, the estimated annual cost associated with the labeling requirements is: $34.50 per hour × 44 hours = $1,518. CPSC staff does not expect there to be operating, maintenance, or capital costs associated with this information collection.

As the PRA requires, CPSC has submitted the information collection requirements of this final rule to OMB. 44 U.S.C. 3507(d). OMB has assigned control number 3041–0179 to this information collection.

XI. Regulatory Flexibility Act

A. Introduction

The RFA (5 U.S.C. 601–612) requires agencies to consider the potential economic impact of a proposed and final rule on small entities, including small businesses. An agency must prepare and publish a final regulatory flexibility analysis (FRFA) when it issues a final rule, unless the head of the agency certifies that the rule will not have a significant economic impact on a substantial number of small entities. 5 U.S.C. 604(a), 605(b). If, rather than publishing a FRFA, the head of the agency makes the above certification, the agency must publish the certification and a statement of the factual basis for it in the **Federal Register** with the final rule. *Id.* 605(b).

The Commission made the above certification in the NPR because staff found that the cost of modifying products to meet the standard would not be significant, and the SACs of all seven small manufacturers were JPMA certified. JPMA certification indicates that the products comply with the ASTM standard and undergo third party testing. The Commission does not have any new information that would change that conclusion. Therefore, the Commission certifies that this rule, incorporating by reference ASTM F2012–18$^{\varepsilon 1}$ as a CPSC standard, will not have a significant economic impact on a substantial number of small entities involved in manufacturing or importing SACs.

B. Comments Relevant to the RFA Analysis

CPSC did not receive any comments addressing the RFA analysis or from the Chief Counsel for Advocacy of the SBA, but did receive one comment regarding small entities. The commenter stated that there should be oversight of small manufacturers or importers if the rule does not apply to them. It appears that the commenter misunderstood the RFA analysis to mean that the rule would not apply to small entities; this is not correct. The rule applies to all manufacturers and importers of SACs sold in the United States.

XII. Congressional Review Act

The Congressional Review Act (CRA; 5 U.S.C. 801–808) states that, before a rule may take effect, the agency issuing the rule must submit the rule, and certain related information, to each House of Congress and the Comptroller General. 5 U.S.C. 801(a)(1). The submission must indicate whether the rule is a ''major rule.'' The CRA states that the Office of Information and Regulatory Affairs (OIRA) determines whether a rule qualifies as a ''major rule.''

Pursuant to the CRA, OIRA designated this rule as not a ''major rule,'' as defined in 5 U.S.C. 804(2). In addition, to comply with the CRA, the Office of the General Counsel will

submit the required information to each House of Congress and the Comptroller General.

XIII. Environmental Considerations

CPSC's regulations list categories of agency actions that ''normally have little or no potential for affecting the human environment.'' 16 CFR 1021.5(c). Such actions qualify as ''categorical exclusions'' under the National Environmental Policy Act (42 U.S.C. 4321–4370m–12), which do not require an environmental assessment or environmental impact statement. One categorical exclusion listed in CPSC's regulations is for rules or safety standards that ''provide design or performance requirements for products.'' 16 CFR 1021.5(c)(1). Because the final rule for SACs creates design or performance requirements, the rule falls within the categorical exclusion.

XIV. Preemption

Under section 26(a) of the CPSA, no state or political subdivision of a state may establish or continue in effect a requirement dealing with the same risk of injury as a Federal consumer product safety standard under the CPSA unless the state requirement is identical to the Federal standard. 15 U.S.C. 2075(a). However, states or political subdivisions of states may apply to CPSC for an exemption, allowing them to establish or continue such a requirement if the state requirement ''provides a significantly higher degree of protection from [the] risk of injury'' and ''does not unduly burden interstate commerce.'' *Id.* 2075(c).

Section 104 of the CPSIA requires the Commission to issue consumer product safety standards for durable infant or toddler products. As such, consumer product safety standards that the Commission creates under CPSIA section 104 are covered by the preemption provision in the CPSA. Therefore, the preemption provision in section 26 of the CPSA applies to the mandatory safety standard for SACs.

XV. Testing, Certification, and Notification of Requirements

Section 14(a) of the CPSA requires the manufacturer or private labeler of a children's product that is subject to a children's product safety rule to certify that, based on a third party conformity assessment body's (*i.e.,* third party laboratory's) testing, the product complies with the relevant children's product safety rule. 15 U.S.C. 2063(a)(2)(A), 2063(a)(2)(B). The Commission must publish an NOR for a third party laboratory to obtain accreditation to assess conformity with a children's product safety rule. 15 U.S.C. 2063(a)(3)(A).

Effective June 10, 2013, the Commission adopted 16 CFR part 1112, which sets out the general requirements and criteria concerning third party laboratories. 78 FR 15836 (Mar. 12, 2013). Part 1112 includes procedures for CPSC to accept a third party laboratory's accreditation and lists the children's product safety rules for which the Commission has published NORs. When the Commission issues a new NOR, it must amend part 1112 to include that NOR.

Because this final rule is a children's product safety rule, the Commission is amending part 1112 to include an NOR for the SACs standard. Third party laboratories that apply for CPSC acceptance to test SACs for compliance with the new SAC rule will have to meet the requirements in part 1112. When a laboratory meets the requirements of a CPSC-accepted third party conformity assessment body, the laboratory can apply to CPSC to include 16 CFR part 1238, *Safety Standard for Stationary Activity Centers,* in the laboratory's scope of accreditation of CPSC safety rules listed on the CPSC website at: *www.cpsc.gov/labse*arch.

As the RFA requires, CPSC staff prepared a FRFA for the Commission's part 1112 rulemaking. 78 FR 15836, 15855 (Mar. 12, 2013). The FRFA concluded that the accreditation requirements would not have a significant economic impact on a substantial number of small laboratories because no requirements applied to laboratories that did not intend to provide third party testing services. The only laboratories CPSC expected to provide such services were those that anticipated receiving sufficient revenue from the mandated testing to justify accepting the requirements as a business decision.

For the same reasons, adding an NOR for the SACs standard to part 1112 will not have a significant economic impact on small test laboratories. Because only a small number of laboratories in the United States have applied for accreditation to test for conformance to existing juvenile product standards, CPSC expects that only a few laboratories will seek accreditation to test for compliance with the SACs standard. Of those that seek accreditation, CPSC expects that most already will have accreditation to test for conformance to other juvenile product standards. The only costs to those laboratories will be the cost of adding the SACs standard to their scopes of accreditation. For these reasons, CPSC certifies that amending 16 CFR part 1112 to include an NOR for the SACs standard will not have a significant economic impact on a substantial number of small entities.

List of Subjects

16 CFR Part 1112

Administrative practice and procedure, Audit, Consumer protection, Reporting and recordkeeping requirements, Third-party conformity assessment body.

16 CFR Part 1238

Consumer protection, Imports, Incorporation by reference, Infants and children, Labeling, Law enforcement, Toys.

For the reasons discussed in the preamble, the Commission amends 16 CFR chapter II as follows:

PART 1112—REQUIREMENTS PERTAINING TO THIRD PARTY CONFORMITY ASSESSMENT BODIES

■ 1. The authority citation for part 1112 continues to read as follows:

Authority: 15 U.S.C. 2063; Pub. L. 110–314, section 3, 122 Stat. 3016, 3017 (2008).

■ 2. Amend § 1112.15 by adding paragraph (b)(48) to read as follows:

§ 1112.15 When can a third party conformity assessment body apply for CPSC acceptance for a particular CPSC rule or test method?

* * * * *

(b) * * *

(48) 16 CFR part 1238, Safety Standard for Stationary Activity Centers.

* * * * *

■ 3. Add part 1238 to read as follows:

PART 1238—SAFETY STANDARD FOR STATIONARY ACTIVITY CENTERS

Sec.
1238.1 Scope.
1238.2 Requirements for Stationary Activity Centers.

Authority: 15 U.S.C. 2056a.

§ 1238.1 Scope.

This part establishes a consumer product safety standard for stationary activity centers.

§ 1238.2 Requirements for stationary activity centers.

Each stationary activity center shall comply with all applicable provisions of ASTM F2012–18$^{\varepsilon 1}$ *Standard Consumer Safety Performance Specification for Stationary Activity Centers*, approved on March 1, 2018. The Director of the Federal Register approves this incorporation by reference in

accordance with 5 U.S.C. 552(a) and 1 CFR part 51. You may obtain a copy from ASTM International, 100 Bar Harbor Drive, P.O. Box 0700, West Conshohocken, PA 19428; *http://www.astm.org*. You may inspect a copy at the Division of the Secretariat, U.S. Consumer Product Safety Commission, Room 820, 4330 East-West Highway, Bethesda, MD 20814, telephone 301–504–7923, or at the National Archives and Records Administration (NARA). For information on the availability of this material at NARA, call 202–741–6030, or go to: *https://www.archives.gov/federal-register/cfr/ibr-locations.html.*

Alberta E. Mills,

Secretary, Consumer Product Safety Commission.

[FR Doc. 2019–12804 Filed 6–17–19; 8:45 am]

BILLING CODE 6355–01–P

DEPARTMENT OF JUSTICE

Drug Enforcement Administration

21 CFR Parts 1301, 1305, and 1308

[Docket No. DEA–375]

Schedules of Controlled Substances: Placement of Thiafentanil in Schedule II

AGENCY: Drug Enforcement Administration, Department of Justice.

ACTION: Final rule.

SUMMARY: On August 26, 2016, the Drug Enforcement Administration (DEA) published in the **Federal Register** an interim final rule with request for comments placing the substance thiafentanil, including its isomers, esters, ethers, salts and salts of isomers, esters and ethers, in schedule II of the Controlled Substances Act. This final rule adopts that interim final rule without change.

DATES: The effective date of this rule is June 18, 2019.

FOR FURTHER INFORMATION CONTACT: Lynnette M. Wingert, Regulatory Drafting and Policy Support Section, Diversion Control Division, Drug Enforcement Administration; Mailing Address: 8701 Morrissette Drive, Springfield, Virginia 22152; Telephone: (202) 598–6812.

SUPPLEMENTARY INFORMATION:

Legal Authority

Under the Controlled Substances Act (CSA), as amended in 2015 by the Improving Regulatory Transparency for New Medical Therapies Act (Pub. L. 114–89), where the Drug Enforcement Administration (DEA) receives notification from the Department of Health and Human Services (HHS) that the Secretary has indexed a drug under section 572 of the Federal Food, Drug, and Cosmetic Act (FDCA), the DEA is required to issue an interim final rule, with opportunity for public comment and to request a hearing, controlling the drug not later than 90 days after receiving such notification from HHS and subsequently to issue a final rule. 21 U.S.C. 811(j). When controlling a drug pursuant to section 811(j), the DEA must apply the scheduling criteria of subsections 811(b), (c), and (d) and section 812(b). 21 U.S.C. 811(j)(3).

Background

On August 26, 2016, the DEA published an interim final rule with request for comments [81 FR 58834] to make thiafentanil (including its salts) a schedule II controlled substance(s). See 21 CFR 1308.12(c)(29) (DEA Controlled Substance Code 9729).

Over time, alternative chemical names have been used to describe this same specific substance. In the preamble to the interim final rule, the DEA provided ''4-(methoxycarbonyl)-4-(N-phenmethoxyacetamido)-1-[2-(thienyl)ethyl]piperidine'' [1] as the chemical name for thiafentanil. However, the DEA believes it is more accurate to use ''methyl 4-(2-methoxy-*N*-phenylacetamido)-1-(2-(thiophen-2-yl)ethyl)piperidine-4-carboxylate)'' [2] in the preamble of this final rule. It bears emphasis that the chemical that is the subject of this final rule is the same substance that was the subject of the interim final rule. The DEA simply is using an alternative chemical description to refer to that same substance in this preamble.

Thiafentanil, a potent opioid, is an analogue of fentanyl. In June 2016, the Food and Drug Administration (FDA) reviewed and determined that the product Thianil (thiafentanil oxalate, a salt form of thiafentanil) met the requirements for addition to the Index of Legally Marketed Unapproved New Animal Drugs for Minor Species (the Index) (21 U.S.C. 360ccc–1) as set forth by the Minor Use and Minor Species Animal Health Act of 2004 (MUMS Act).[3] As discussed in the preamble to the interim final rule, the HHS provided the requisite notification to DEA that HHS/FDA added Thianil (thiafentanil oxalate) to the Index (Minor Species Index File (MIF) 900000) under section 572 of the FDCA.

The DEA based its scheduling decision, and issuance of the interim final rule, on 21 U.S.C. 811(j), the HHS's November 2011 scientific and medical evaluation and scheduling recommendation, the HHS's March 2016 supplemental analysis, the MUMS Act indication by the HHS/FDA, and the DEA's determination. The interim final rule provided an opportunity for interested persons to file written comments, as well as a request for hearing or waiver of hearing, on or before September 26, 2016.

Comments Received

The DEA received one comment from the American Veterinary Medical Association supporting the interim final rule to control thiafentanil as a schedule II substance of the CSA.

DEA Response. The DEA appreciates the support for this rulemaking.

The DEA did not receive any requests for hearing or waiver of hearing. Based on the rationale set forth in the interim final rule, the DEA adopts the interim final rule, without change.

Requirements for Handling Thiafentanil

As indicated above, thiafentanil has been a schedule II controlled substance for more than two years by virtue of the interim final rule issued by the DEA in 2016. Thus, this final rule does not alter the regulatory requirements applicable to handlers of thiafentanil that have been in place since that time. Nonetheless, for informational purposes, we restate here those requirements. Thiafentanil is subject to the CSA's schedule II regulatory controls and administrative, civil, and criminal sanctions applicable to the manufacture, distribution, reverse distribution, dispensing, importing, exporting, research, and conduct of instructional activities and chemical analysis with, and possession involving schedule II substances, including the following:

1. *Registration.* Any person who desires to handle thiafentanil

[1] The interim final rule also mentioned the other chemical name, 4-(methoxycarbonyl)-4-(*N*-phenylmethoxyacetamido)-1-[2-(2-thienyl)ethyl]piperidine in the section entitled ''Background, Legal Authority, and Basis for This Scheduling Action''.

[2] Other chemical names have been used for thiafentanil. The HHS referred to the substance as ''4-(methoxycarbonyl)-4-(N-phenymethoxyacetamido)-1-[2-(thienyl)ethyl]piperidine'' and ''4-methoxycarbonyl-4(*N*-phenyl-methoxyacetamido)-1-(2′-(2″-thienyl)ethyl]-piperidine'' in its November 2011 scientific and medical evaluation and scheduling recommendation, and as ''4-(methoxycarbonyl)-4-(N-phenmethoxyacetamido)-1-[2-(thienyl)ethyl]piperidium'' in its March 2016 supplemental analysis.

[3] The MUMS Act amended the FDCA to allow for the legal marketing of unapproved new animal drugs intended for use in minor species.

(manufacture, distribute, reverse distribute, dispense, import, export, engage in research, or conduct instructional activities or chemical analysis with, or possess), must be registered with the DEA to conduct such activities pursuant to 21 U.S.C. 822, 823, 957, and 958 and in accordance with 21 CFR parts 1301 and 1312.

2. *Quota.* Only registered manufacturers are permitted to manufacture thiafentanil in accordance with a quota assigned pursuant to 21 U.S.C. 826 and in accordance with 21 CFR part 1303.

3. *Disposal of stocks.* Upon obtaining a schedule II registration to handle thiafentanil, and if subsequently, any person who does not desire or is not able to maintain a schedule II registration must surrender all quantities of currently held thiafentanil, or may transfer all quantities of currently held thiafentanil to a person registered with the DEA in accordance with 21 CFR part 1317, in addition to all other applicable federal, state, local, and tribal laws.

4. *Security.* Thiafentanil is subject to schedule II security requirements and must be handled and stored pursuant to 21 U.S.C. 821 and 823, and in accordance with 21 CFR 1301.71–1301.93.

5. *Labeling and Packaging.* All labels, labeling, and packaging for commercial containers of thiafentanil must comply with 21 U.S.C. 825 and 958(e), and be in accordance with 21 CFR part 1302. In addition, thiafentanil is subject to additional labeling requirements provided by the FDA. Thiafentanil must be labeled, distributed, and promoted in accordance with the Index entry of the new animal drug and the FDA may remove a new animal drug from the Index if the conditions and limitations of use have not been followed. 21 U.S.C. 360ccc–l(d)(l)(G); (f)(l)(F). The labeling of an indexed new animal drug must prominently state that the extra-label use of the product is prohibited. 21 U.S.C. 360ccc–l(h).

6. *Inventory.* Every DEA registrant who desires to possess any quantity of thiafentanil must take an inventory of thiafentanil on hand, pursuant to 21 U.S.C. 827 and 958, and in accordance with 21 CFR 1304.03, 1304.04, and 1304.11.

Any person who becomes registered with the DEA to handle thiafentanil must take an initial inventory of all stocks of controlled substances (including thiafentanil) on hand on the date the registrant first engages in the handling of controlled substances, pursuant to 21 U.S.C. 827 and 958, and in accordance with 21 CFR 1304.03, 1304.04, and 1304.11.

After the initial inventory, every DEA registrant must take a new inventory of all stocks of controlled substances (including thiafentanil) on hand every two years, pursuant to 21 U.S.C. 827 and 958, and in accordance with 21 CFR 1304.03, 1304.04, and 1304.11.

7. *Records and Reports.* Every DEA registrant must maintain records and submit reports for thiafentanil, or products containing thiafentanil, pursuant to 21 U.S.C. 827 and 958(e), and in accordance with 21 CFR parts 1304, 1312 and 1317.

8. *Orders for thiafentanil.* Every DEA registrant who distributes thiafentanil is required to comply with order form requirements, pursuant to 21 U.S.C. 828, and in accordance with 21 CFR part 1305.

9. *Prescriptions and other dispensing.* All prescriptions for thiafentanil or products containing thiafentanil must comply with 21 U.S.C. 829, and be issued in accordance with 21 CFR parts 1306 and 1311, subpart C. Moreover, given that thiafentanil is not the subject of an approved new drug application under the FDCA, and that it is only allowed under the MUMS Act amendments to the FDCA to be marketed for extremely limited use in minor species, DEA would not consider any dispensing of thiafentanil for human use to be for a legitimate medical purpose within the meaning of the CSA. Likewise, DEA would not consider any dispensing of thiafentanil for animal use beyond the scope of the drug's labeling authorized under the MUMS Act amendments to the FDCA to be for a legitimate medical purpose within the meaning of the CSA.

10. *Manufacturing and Distributing.* In addition to the general requirements of the CSA and DEA regulations that are applicable to manufacturers and distributors of schedule II controlled substances, such registrants should be advised that (consistent with the foregoing considerations) any manufacturing or distribution of thiafentanil may only be for the legitimate purposes consistent with the drug's labeling authorized under the MUMS Act, or for research activities authorized by the FDCA and CSA.

11. *Importation and Exportation.* All importation and exportation of thiafentanil must be in compliance with 21 U.S.C. 952, 953, 957, and 958, and in accordance with 21 CFR part 1312.

12. *Liability.* Any activity involving thiafentanil not authorized by, or in violation of, the CSA or its implementing regulations, is unlawful, and may subject the person to administrative, civil, and/or criminal sanctions.

Regulatory Analyses

Administrative Procedure Act

This final rule adopts, without change, the amendments made by the interim final rule that are already in effect. Section 553 of the Administrative Procedure Act (APA) (5 U.S.C. 553) generally requires notice and comment for rulemakings. However, Public Law 114–89, which was signed into law in 2015, amended 21 U.S.C. 811 to provide that in cases where a new drug is (1) approved or indexed by the Department of Health and Human Services (HHS) and (2) HHS recommends control in CSA schedule II–V, the DEA shall issue an interim final rule scheduling the drug within 90 days. This action was taken August 26, 2016. Additionally, the law specifies that the rulemaking shall become immediately effective as an interim final rule without requiring the DEA to demonstrate good cause.

Executive Order 12866, 13563, and 13771, Regulatory Planning and Review, Improving Regulation and Regulatory Review, and Reducing Regulation and Controlling Regulatory Costs

In accordance with Public Law 114–89, this scheduling action is subject to formal rulemaking procedures performed ''on the record after opportunity for a hearing,'' which are conducted pursuant to the provisions of 5 U.S.C. 556 and 557. The CSA sets forth the procedures and criteria for scheduling a drug or other substance. Such actions are exempt from review by the Office of Management and Budget (OMB) pursuant to section 3(d)(1) of Executive Order 12866 and the principles reaffirmed in Executive Order 13563.

This final rule is not an Executive Order 13771 regulatory action pursuant to Executive Order 12866 and OMB guidance.[4]

Executive Order 12988, Civil Justice Reform

This regulation meets the applicable standards set forth in sections 3(a) and 3(b)(2) of Executive Order 12988 to eliminate drafting errors and ambiguity, minimize litigation, provide a clear legal standard for affected conduct, and promote simplification and burden reduction.

[4] Office of Management & Budget, Executive Office of The President, Interim Guidance Implementing Section 2 of the Executive Order of January 30, 2017 Titled ''Reducing Regulation and Controlling Regulatory Costs'' (Feb. 2, 2017).

Executive Order 13132, Federalism

This rulemaking does not have federalism implications warranting the application of Executive Order 13132. The rule does not have substantial direct effects on the States, on the relationship between the national government and the States, or on the distribution of power and responsibilities among the various levels of government.

Executive Order 13175, Consultation and Coordination With Indian Tribal Governments

This final rule does not have tribal implications warranting the application of Executive Order 13175. It does not have substantial direct effects on one or more Indian tribes, on the relationship between the Federal government and Indian tribes, or on the distribution of power and responsibilities between the Federal government and Indian tribes.

Regulatory Flexibility Act

The Regulatory Flexibility Act (RFA) (5 U.S.C. 601–612) applies to rules that are subject to notice and comment under section 553(b) of the APA. As noted in the above discussion regarding applicability of the Administrative Procedure Act, the DEA was not required to publish a general notice of proposed rulemaking prior to this final rule. Consequently, the RFA does not apply.

Unfunded Mandates Reform Act of 1995

In accordance with the Unfunded Mandates Reform Act (UMRA) of 1995, 2 U.S.C. 1501 *et seq.,* the DEA has determined and certifies that this action would not result in any Federal mandate that may result ''in the expenditure by state, local, and tribal governments, in the aggregate, or by the private sector, of $100,000,000 or more (adjusted for inflation) in any one year.'' Therefore, neither a Small Government Agency Plan nor any other action is required under UMRA of 1995.

Paperwork Reduction Act of 1995

This action does not impose a new collection of information requirement under the Paperwork Reduction Act of 1995. 44 U.S.C. 3501–3521. This action would not impose recordkeeping or reporting requirements on State or local governments, individuals, businesses, or organizations. An agency may not conduct or sponsor, and a person is not required to respond to, a collection of information unless it displays a currently valid OMB control number.

Congressional Review Act

This final rule is not a major rule as defined by the Congressional Review Act (CRA), 5 U.S.C. 804. However, pursuant to the CRA, the DEA is submitting a copy of this final rule to both Houses of Congress and to the Comptroller General.

List of Subjects

21 CFR Part 1301

Administrative practice and procedure, Drug traffic control, Security measures.

21 CFR Part 1305

Drug traffic control, Reporting and recordkeeping requirements.

21 CFR Part 1308

Administrative practice and procedure, Drug traffic control, Reporting and recordkeeping requirements.

PART 1301—REGISTRATION OF MANUFACTURERS, DISTRIBUTORS, AND DISPENSERS OF CONTROLLED SUBSTANCES

PART 1305—ORDERS FOR SCHEDULE I AND II CONTROLLED SUBSTANCES

PART 1308—SCHEDULES OF CONTROLLED SUBSTANCES

■ Accordingly, the interim final rule amending 21 CFR parts 1301, 1305, and 1308, which was published on August 26, 2016 (81 FR 58834), is adopted as a final rule without change.

Dated: June 10, 2019.

Uttam Dhillon,

Acting Administrator.

[FR Doc. 2019–12735 Filed 6–17–19; 8:45 am]

BILLING CODE 4410–09–P

DEPARTMENT OF THE TREASURY

Internal Revenue Service

26 CFR Part 1

[TD 9868]

RIN 1545–BO93

Electing Small Business Trusts With Nonresident Aliens as Potential Current Beneficiaries

AGENCY: Internal Revenue Service (IRS), Treasury.

ACTION: Final regulations.

SUMMARY: This document contains final regulations regarding the statutory expansion of the class of permissible potential current beneficiaries (PCBs) of an electing small business trust (ESBT) to include nonresident aliens (NRAs). In particular, the final regulations ensure that the income of an S corporation will continue to be subject to U.S. Federal income tax when an NRA is a deemed owner of a grantor trust that elects to be an ESBT.

DATES: *Effective Date:* The final regulations are effective on June 18, 2019.

Applicability Date: The final regulations are applicable to all ESBTs after December 31, 2017.

FOR FURTHER INFORMATION CONTACT: Cynthia Morton, (202) 317–5279.

SUPPLEMENTARY INFORMATION:

Background

This document contains final amendments to the Income Tax Regulations (26 CFR part 1) under sections 641 and 1361 of the Internal Revenue Code (Code).

Section 13541(a) of the Tax Cuts and Jobs Act, Public Law 115–97, 131 Stat. 2054, 2154 (TCJA) amended section 1361(c)(2)(B)(v) of the Code to allow NRAs to be PCBs of ESBTs. As amended, section 1361(c)(2)(B)(v) provides that NRA PCBs will not be taken into account for purposes of the S corporation shareholder-eligibility requirement that otherwise prohibits NRA shareholders. See section 1361(b)(1)(C).

On April 19, 2019, the Department of the Treasury (Treasury Department) and the IRS published a notice of proposed rulemaking (REG–117062–18) in the **Federal Register** (84 FR 16415) proposing regulations under sections 641 and 1361 (proposed regulations). No comments addressing the proposed regulations were received in response to the notice of proposed rulemaking. As no request for a public hearing was received, no hearing was held.

Explanation of Provisions

This document adopts the proposed regulations with no change as final regulations. Where an NRA is a deemed owner of a grantor trust that has elected to be an ESBT, the final regulations ensure that such ESBT's S corporation income will continue to be subject to U.S. Federal income tax. Specifically, the final regulations modify the allocation rules under § 1.641(c)–1 to require that the S corporation income of the ESBT be included in the S portion of the ESBT if that income otherwise would have been allocated to an NRA deemed owner under the grantor trust rules. Accordingly, such income will be taxed to the domestic ESBT by providing that, if the deemed owner is an NRA, the grantor portion of net

income must be reallocated from the grantor portion of the ESBT to the ESBT's S portion.

The final regulations also implement Congress' amendment to section 1361(c)(2)(B)(v) by making conforming revisions to § 1.1361–1(m). For example, the final regulations update the description of PCBs in § 1.1361–1(m)(4)(i) to reflect the ability of NRAs to be PCBs of ESBTs. The final regulations similarly update other provisions in § 1.1361–1(m) to reflect that ability.

Effective/Applicability Date

Section 7805(b)(1)(A) and (B) of the Code generally provide that no temporary, proposed, or final regulation relating to the internal revenue laws may apply to any taxable period ending before the earliest of (A) the date on which such regulation is filed with the **Federal Register**, or (B) in the case of a final regulation, the date on which a proposed or temporary regulation to which the final regulation relates was filed with the **Federal Register**. However, section 7805(b)(2) provides that regulations filed or issued within 18 months of the date of the enactment of the statutory provision to which they relate are not prohibited from applying to taxable periods prior to those described in section 7805(b)(1). Furthermore, section 7805(b)(3) provides that the Secretary may provide that any regulation may take effect or apply retroactively to prevent abuse.

Accordingly, to prevent abuse of sections 641 and 1361, and the final regulations thereunder, the final regulations apply to all ESBTs after December 31, 2017.

Special Analyses

The final regulations are not subject to review under section 6(b) of Executive Order 12866 pursuant to the Memorandum of Agreement (April 11, 2018) between the Treasury Department and the Office of Management and Budget regarding review of tax regulations.

The final regulations do not impose a collection of information on any entities, including small entities. Pursuant to the Regulatory Flexibility Act (5 U.S.C. chapter 6), it is hereby certified that the final regulations would not have a significant economic impact on a substantial number of small entities. This certification is based on the fact that the final regulations would primarily affect sophisticated ownership structures involving ESBTs that have NRAs as PCBs.

Pursuant to section 7805(f), the proposed regulations preceding these final regulations were submitted to the Chief Counsel for Advocacy of the Small Business Administration for comment on its impact on small business, and no comments were received.

Drafting Information

The principal author of the final regulations is Cynthia Morton of the Office of Associate Chief Counsel (Passthroughs and Special Industries). However, other personnel from the IRS and the Treasury Department participated in their development.

List of Subjects in 26 CFR Part 1

Income taxes, Reporting and recordkeeping requirements.

Amendments to the Regulations

Accordingly, 26 CFR part 1 is amended as follows:

PART 1—INCOME TAXES

■ **Paragraph 1.** The authority citation for part 1 continues to read in part as follows:

Authority: 26 U.S.C. 7805 * * *

■ **Par. 2.** Section 1.641(c)–1 is amended by:

■ 1. Revising paragraphs (b)(1) and (2).

■ 2. In paragraph (k):

■ i. Revising the paragraph heading.

■ ii. Removing the language ''(l) *Example 1*'' and adding ''(l)(1) (*Example 1*)'' in its place.

■ iii. Adding a sentence to the end of paragraph (k).

■ 3. In paragraph (l), designating *Examples 1* through *5* as paragraphs (l)(1) through (5), respectively.

■ 4. In newly designated paragraph (l)(1)(ii), adding a heading to the table.

■ 5. In newly designated paragraph (l)(1)(iii):

■ i. Designating the undesignated paragraph before the first table as paragraph (l)(1)(iii)(A) and adding a heading for the table in newly designated paragraph (l)(1)(iii)(A).

■ ii. Designating the undesignated paragraph before the second table as paragraph (l)(1)(iii)(B) and adding a heading for the table in newly designated paragraph (l)(1)(iii)(B).

■ iii. Designating the undesignated paragraph before the third table as paragraph (l)(1)(iii)(C) and adding a heading for the table in newly designated paragraph (l)(1)(iii)(C).

■ 6. Adding headings for the tables in newly designated paragraphs (l)(1)(v), (vi), and (vii).

■ 7. In newly designated paragraph (l)(3)(i), removing the language ''*Example 2*'' and adding ''*Example 2* in paragraph (l)(2) of this section'' in its place.

■ 8. Adding paragraph (l)(6).

The revision and additions read as follows:

§ 1.641(c)–1 Electing small business trust.

* * * * *

(b) * * *

(1) *Grantor portion*—(i) *In general.* Subject to paragraph (b)(1)(ii) of this section, the grantor portion of an ESBT is the portion of the trust that is treated as owned by the grantor or another person under subpart E of the Code.

(ii) *Nonresident alien deemed owner.* If, pursuant to section 672(f)(2)(A)(ii), the deemed owner of a grantor portion of the ESBT is a nonresident alien, as defined in section 7701(b)(1)(B) (NRA), the items of income, deduction, and credit from that grantor portion must be reallocated from the grantor portion to the S portion, as defined in paragraph (b)(2) of this section, of the ESBT.

(2) *S portion*—(i) *In general.* Subject to paragraph (b)(2)(ii) of this section, the S portion of an ESBT is the portion of the trust that consists of S corporation stock and that is not treated as owned by the grantor or another person under subpart E of the Code.

(ii) *N*onresident alien *(NRA) deemed owner of grantor portion.* The S portion of an ESBT also includes the grantor portion of the items of income, deduction, and credit reallocated under paragraph (b)(1)(ii) of this section from the grantor portion of the ESBT to the S portion of the ESBT.

* * * * *

(k) *Applicability date.* * * * Paragraphs (b)(1) and (2) of this section, and *Example 6* in paragraph (l)(6) of this section, apply to all ESBTs after December 31, 2017.

(l) * * *

(1) * * *

(ii) * * *

Table 1 to paragraph (l)(1)(ii)

* * * * *

(iii) * * *

(A) * * *

Table 2 to paragraph (l)(1)(iii)(A)

* * * * *

(B) * * *

Table 3 to paragraph (l)(1)(iii)(B)

* * * * *

(C) * * *

Table 4 to paragraph (l)(1)(iii)(C)

* * * * *

(v) * * *

Table 5 to paragraph (l)(1)(v)

* * * * *

(vi) * * *

Table 6 to paragraph (l)(1)(vi)

* * * * *

(vii) * * *

Table 7 to paragraph (l)(1)(vii)

* * * * *

(6) *Example 6: NRA as potential current beneficiary.* Domestic Trust (DT) has a valid ESBT election in effect. DT owns S corporation stock. The S corporation owns U.S. and foreign assets. The foreign assets produce foreign source income. B, an NRA, is the grantor and the only trust beneficiary and potential current beneficiary of DT. B is not a resident of a country with which the United States has an income tax treaty. Under section 677(a), B is treated as the owner of DT because, under the trust documents, income and corpus may be distributed only to B during B's lifetime. Paragraph (b)(2)(ii) of this section requires that the S corporation income of the ESBT that otherwise would have been allocated to B under the grantor trust rules must be reallocated from B's grantor portion to the S portion of DT. In the example in this paragraph (l)(6), the S portion of DT is treated as including the grantor portion of the ESBT, and thus all of DT's income from the S corporation is taxable to DT.

■ **Par. 3.** Section 1.1361–1 is amended by:

■ 1. Revising paragraph (m)(1)(ii)(D).
■ 2. Revising paragraph (m)(2)(ii)(E)(*2*).
■ 3. Adding two sentences to the end of paragraph (m)(4)(i).
■ 4. Revising the second sentence of paragraph (m)(5)(iii).
■ 5. In paragraph (m)(8), designating *Examples 1* through *9* as paragraphs (m)(8)(i) through (ix), respectively.
■ 6. Redesignating paragraphs (m)(8)(i)(i) through (iii) as paragraphs (m)(8)(i)(A) through (C), respectively.
■ 7. Redesignating paragraphs (m)(8)(ii)(i) and (ii) as paragraphs (m)(8)(ii)(A) and (B), respectively, and revising the second sentence of newly redesignated paragraph (m)(8)(ii)(A).
■ 8. In the first sentence of newly redesignated paragraph (m)(8)(ii)(B), removing the language ''*Example 2*(i)'' and adding ''*Example 2* in paragraph (m)(8)(ii)(A) of this section'' in its place.
■ 9. Redesignating paragraphs (m)(8)(vi)(i) through (iii) as paragraphs (m)(8)(vi)(A) through (C), respectively, and revising the first sentence of newly redesignated paragraph (m)(8)(vi)(B).
■ 10. In the first sentence of newly redesignated paragraph (m)(8)(vi)(C), removing the language ''paragraph (i) of this *Example 6*'' and adding ''*Example 6* in paragraph (m)(8)(vi)(A) of this section'' in its place.
■ 11. In paragraph (m)(9):
■ i. Removing the language ''Paragraphs (m)(2)(ii)(A), (m)(4)(iii) and (vi), and (m)(8), *Example 2, Example 5, Example 7, Example 8,* and *Example 9*'' from the second sentence and adding ''Paragraphs (m)(2)(ii)(A) and (m)(4)(iii) and (vi) of this section and *Examples 2, 5,* and *7* through *9* in paragraphs (m)(8)(ii), (v), and (vii) through (ix), respectively,'' in its place.
■ ii. Adding a sentence at the end of the paragraph.

The revisions and additions read as follows:

§ 1.1361–1 S corporation defined.

* * * * *

(m) * * *

(1) * * *

(ii) * * *

(D) *Nonresident aliens.* A nonresident alien (NRA), as defined in section 7701(b)(1)(B), is an eligible beneficiary of an ESBT and an eligible potential current beneficiary.

* * * * *

(2) * * *

(ii) * * *

(E) * * *

(*2*) All potential current beneficiaries of the trust meet the shareholder requirements of section 1361(b)(1); for the purpose of this paragraph (m)(2)(ii)(E)(*2*), an NRA potential current beneficiary does not violate the requirement under section 1361(b)(1)(C) that an S corporation cannot have an NRA as a shareholder.

* * * * *

(4) * * *

(i) * * * An NRA potential current beneficiary of an ESBT is treated as a shareholder for purposes of the 100-shareholder limit under section 1361(b)(1)(A). However, an NRA potential current beneficiary of an ESBT is not treated as a shareholder in determining whether a corporation is a small business corporation for purposes of the NRA-shareholder prohibition under section 1361(b)(1)(C).

* * * * *

(5) * * *

(iii) * * * For example, the S corporation election will terminate if a charitable remainder trust becomes a potential current beneficiary of an ESBT. * * *

* * * * *

(8) * * *

(ii) * * *

(A) * * * On January 1, 2006, A, a partnership, becomes a potential current beneficiary of Trust. * * *

* * * * *

(vi) * * *

(B) * * * Assume the same facts as *Example 6* in paragraph (m)(8)(vi)(A) of this section except that D is a charitable remainder trust. * * *

* * * * *

(9) * * * Paragraphs (m)(1)(ii)(D), (m)(2)(ii)(E)(*2*), (m)(4)(i), (m)(5)(iii), and (m)(8) of this section apply to all ESBTs after December 31, 2017.

Kirsten Wielobob,

Deputy Commissioner for Services and Enforcement.

Approved: June 10, 2019.

David J Kautter,

Assistant Secretary of the Treasury (Tax Policy).

[FR Doc. 2019–12639 Filed 6–13–19; 4:15 pm]

BILLING CODE 4830–01–P

DEPARTMENT OF HOMELAND SECURITY

Coast Guard

33 CFR Part 100

[Docket No USCG–2019–0340]

RIN 1625–AA08

Special Local Regulation; Rock the River Toledo, Maumee River, Toledo, OH

AGENCY: Coast Guard, DHS.

ACTION: Temporary final rule.

SUMMARY: The Coast Guard is establishing a temporary special local regulation for a portion of the navigable waters of the Maumee River, Toledo, OH. This regulated area is necessary to protect spectators and vessels from potential hazards associated with high speed regatta races during Rock the River Toledo. Entry of vessels or persons into this regulated area is prohibited unless specifically authorized by the Captain of the Port Detroit, or a designated representative.

DATES: This temporary final rule is effective from 8 a.m. on June 28, 2019 through 7 p.m. on June 29, 2019.

ADDRESSES: To view documents mentioned in this preamble as being available in the docket, go to *http://www.regulations.gov,* type USCG–2019–0340 in the ''SEARCH'' box and click ''SEARCH.'' Click on Open Docket Folder on the line associated with this rule.

FOR FURTHER INFORMATION CONTACT: If you have questions on this temporary rule, call or email Ryan Erpelding, Waterways Department, Marine Safety Unit Toledo, Coast Guard; telephone (419) 418–6037, or email *Ryan.G.Erpelding@uscg.mil.*

SUPPLEMENTARY INFORMATION:

I. Table of Abbreviations

CFR Code of Federal Regulations
DHS Department of Homeland Security
FR Federal Register
NPRM Notice of Proposed Rulemaking

§ Section
U.S.C. United States Code

II. Background Information and Regulatory History

The Coast Guard is issuing this temporary final rule without prior notice and opportunity to comment pursuant to authority under section 4(a) of the Administrative Procedure Act (APA) (5 U.S.C. 553(b)). This provision authorizes an agency to issue a rule without prior notice and opportunity to comment when the agency for good cause finds that those procedures are ''impracticable, unnecessary, or contrary to the public interest.'' Under 5 U.S.C. 553(b)(B), the Coast Guard finds that good cause exists for not publishing a notice of proposed rulemaking (NPRM) with respect to this rule because doing so would be impracticable. The Coast Guard did not receive the final details of this regatta in time to publish an NPRM. As such, it is impracticable to publish an NPRM because we lack sufficient time to provide a reasonable comment period and then consider those comments before issuing the rule.

Under 5 U.S.C. 553(d)(3), the Coast Guard finds that good cause exists for making this rule effective less than 30 days after publication in the **Federal Register**. Waiting for a 30-day effective period to run is impracticable and contrary to the public interest for the reasons discussed in the preceding paragraph.

III. Legal Authority and Need for Rule

The Coast Guard is issuing this rule under authority in 46 U.S.C. 70041. The Captain of the Port Detroit (COTP) has determined that potential hazard associated with the regatta from 8 a.m. on June 28, 2019 through 7 p.m. on June 29, 2019 will be a safety concern to anyone within waters of the Maumee River, Toledo, OH where the regatta is being held. This rule is needed to protect personnel, vessels, and the marine environment in the navigable waters within the safety zone while the regatta occurs.

IV. Discussion of the Rule

This rule establishes a safety zone from 8 a.m. on June 28, 2019 through 7 p.m. on June 29, 2019. The safety zone will encompass all U.S. navigable waters of the Maumee River, Toledo, OH from the Martin Luther King Jr. Memorial Bridge at river mile 4.30 to a line drawn from a point at 41°38′44.6″ N 83°31′51.8″ W east to a point at 41°38′45.1″ N 83°32′02.2″ W. No vessel or person will be permitted to enter the safety zone without obtaining permission from the COTP or a designated representative.

The Coast Guard will patrol the regatta area under the direction of the Captain of the Port Detroit (COTP), or a designated representative. A designated representative may be a Coast Guard Patrol Commander. Vessels desiring to transit the regulated area may do so only with prior approval of the COTP or a designated representative and when so directed by that officer. Vessels will be operated at a no wake speed to reduce the wake to a minimum, in a manner which will not endanger participants in the event or any other craft and remain vigilant for event participants and safety craft. Additionally, vessels must yield right-of-way for event participants and event safety craft and must follow directions given by the COTP or a designated representative. The rules contained in the above two sentences do not apply to participants in the event or vessels of the patrol operating in the performance of their assigned duties. Commercial vessels will have right-of-way over event participants and event safety craft. The races will stop for oncoming freighter or commercial traffic and will resume after the vessel has completed its passage through the regulated area. The COTP or a designated representative may direct the anchoring, mooring, or movement of any boat or vessel within the regatta area. A succession of sharp, short signals by whistle or horn from vessels patrolling the area under the direction of the COTP or a designated representative shall serve as a signal to stop. Vessels so signaled must stop and comply with the orders of the COTP or a designated representative. Failure to do so may result in expulsion from the area, citation for failure to comply, or both. The COTP or a designated representative may establish vessel size and speed limitations and operating conditions and may restrict vessel operation within the regatta area to vessels having particular operating characteristics. The COTP or a designated representative may terminate the marine event or the operation of any vessel at any time it is deemed necessary for the protection of life and property.

Patrol Commander means a Coast Guard commissioned, warrant, or petty officer who has been designated by the COTP to monitor a regatta area, permit entry into the regatta area, give legally enforceable orders to persons or vessels within the regatta area, and take other actions authorized by the COTP. The Patrol Commander will be aboard either a Coast Guard or Coast Guard Auxiliary vessel. The Patrol Commander may be contacted on VHF–FM Marine Channel 16 by the call sign ''Coast Guard Patrol Commander.''

V. Regulatory Analyses

We developed this rule after considering numerous statutes and executive orders related to rulemaking. Below we summarize our analyses based on these statutes and executive orders.

A. Regulatory Planning and Review

Executive Orders 12866 and 13563 direct agencies to assess the costs and benefits of available regulatory alternatives and, if regulation is necessary, to select regulatory approaches that maximize net benefits. Executive Order 13771 directs agencies to control regulatory costs through a budgeting process. This rule has not been designated a ''significant regulatory action,'' under Executive Order 12866. Accordingly, this rule has not been reviewed by the Office of Management and Budget (OMB), and pursuant to OMB guidance it is exempt from the requirements of Executive Order 13771.

This regulatory action determination is based on the size, location, duration, and time-of-year of the regulated area. Vessel traffic will be able to safely transit around this regulated area, which will impact a small designated area of the Maumee River in Toledo, OH for a period of 35 hours. Moreover, the Coast Guard will issue Broadcast Notice to Mariners via VHF–FM Marine Channel 16 about the regulated area and the rule allows vessels to seek permission to enter the regulated area.

B. Impact on Small Entities

The Regulatory Flexibility Act of 1980 (RFA), 5 U.S.C. 601–612, as amended, requires federal agencies to consider the potential impact of regulations on small entities during rulemaking. The Coast Guard certifies under 5 U.S.C. 605(b) that this rule will not have a significant economic impact on a substantial number of small entities. Under the Regulatory Flexibility Act (5 U.S.C. 601–612), we have considered the impact of this temporary rule on small entities. While some owners or operators of vessels intending to transit the safety zone may be small entities, for the reasons stated in section V.A above, this rule will not have a significant economic impact on any vessel owner or operator.

Under section 213(a) of the Small Business Regulatory Enforcement Fairness Act of 1996 (Pub. L. 104–121), we want to assist small entities in understanding this rule. If the rule

would affect your small business, organization, or governmental jurisdiction and you have questions concerning its provisions or options for compliance, please contact the person listed in the **FOR FURTHER INFORMATION CONTACT** section.

Small businesses may send comments on the actions of Federal employees who enforce, or otherwise determine compliance with, Federal regulations to the Small Business and Agriculture Regulatory Enforcement Ombudsman and the Regional Small Business Regulatory Fairness Boards. The Ombudsman evaluates these actions annually and rates each agency's responsiveness to small business. If you wish to comment on actions by employees of the Coast Guard, call 1–888–REG–FAIR (1–888–734–3247). The Coast Guard will not retaliate against small entities that question or complain about this rule or any policy or action of the Coast Guard.

C. Collection of Information

This rule will not call for a new collection of information under the Paperwork Reduction Act of 1995 (44 U.S.C. 3501–3520).

D. Federalism

A rule has implications for federalism under Executive Order 13132, Federalism, if it has a substantial direct effect on the States, on the relationship between the national government and the States, or on the distribution of power and responsibilities among the various levels of government. We have analyzed this rule under that Order and have determined that it is consistent with the fundamental federalism principles and preemption requirements described in Executive Order 13132.

Also, this rule does not have tribal implications under Executive Order 13175, Consultation and Coordination with Indian Tribal Governments, because it does not have a substantial direct effect on one or more Indian tribes, on the relationship between the Federal Government and Indian tribes, or on the distribution of power and responsibilities between the Federal Government and Indian tribes. If you believe this rule has implications for federalism or Indian tribes, please contact the person listed in the **FOR FURTHER INFORMATION CONTACT** section above.

E. Unfunded Mandates Reform Act

The Unfunded Mandates Reform Act of 1995 (2 U.S.C. 1531–1538) requires Federal agencies to assess the effects of their discretionary regulatory actions. In particular, the Act addresses actions that may result in the expenditure by a State, local, or tribal government, in the aggregate, or by the private sector of $100,000,000 (adjusted for inflation) or more in any one year. Though this rule will not result in such an expenditure, we do discuss the effects of this rule elsewhere in this preamble.

F. Environment

We have analyzed this rule under Department of Homeland Security Management Directive 023–01 and Environmental Planning COMDTINST 5090.1 (series), which guide the Coast Guard in complying with the National Environmental Policy Act of 1969 (42 U.S.C. 4321–4370f), and have determined that this action is one of a category of actions that do not individually or cumulatively have a significant effect on the human environment. This rule involves a special local regulation interval lasting for a period of 35 hours that will prohibit entry within specified waters of the Maumee River, Toledo, OH. It is categorically excluded from further review under paragraph L60(a) in Table 3–1 of U.S. Coast Guard Environmental Planning Implementing Procedures 5090.1. A Record of Environmental Consideration supporting this determination is available in the docket where indicated under **ADDRESSES**.

G. Protest Activities

The Coast Guard respects the First Amendment rights of protesters. Protesters are asked to contact the person listed in the **FOR FURTHER INFORMATION CONTACT** section to coordinate protest activities so that your message can be received without jeopardizing the safety or security of people, places or vessels.

List of Subjects in 33 CFR Part 100

Marine safety, Navigation (water), Reporting and recordkeeping requirements, Waterways.

For the reasons discussed in the preamble, the Coast Guard amends 33 CFR part 100 as follows:

PART 100—SAFETY OF LIFE ON NAVIGABLE WATERS

■ 1. The authority citation for part 100 continues to read as follows:

Authority: 46 U.S.C. 70041; 33 CFR 1.05–1.

■ 2. Add § 100.T999–0340 to read as follows:

§ 100.T999–0340 Special Local Regulation; Rock the River Toledo, Maumee River, Toledo, OH.

(a) *Regulated area.* The regulated area includes all U.S. navigable waters of the Maumee River, Toledo, OH from the Martin Luther King Jr. Memorial Bridge at river mile 4.30 to a line drawn from a point at 41°38′44.6″ N 83°31′51.8″ W east to a point at 41°38′45.1″ N 83°32′02.2″ W (NAD 83).

(b) *Enforcement period.* The regulated area described in paragraph (a) of this section will be enforced from 8 a.m. through 7 p.m. on June 28, 2019 and June 29, 2019.

(c) *Special local regulations.* (1) The Coast Guard will patrol the regatta area under the direction of the Captain of the Port Detroit (COTP), or a designated representative. A designated representative may be a Coast Guard Patrol Commander.

(2) Vessels desiring to transit the regulated area may do so only with prior approval of the COTP or a designated representative and when so directed by that officer. Vessels will be operated at a no wake speed to reduce the wake to a minimum, in a manner which will not endanger participants in the event or any other craft and remain vigilant for event participants and safety craft. Additionally, vessels must yield right-of-way for event participants and event safety craft and must follow directions given by the COTP or a designated representative. The rules contained in the preceding two sentences do not apply to participants in the event or vessels of the patrol operating in the performance of their assigned duties. Commercial vessels will have right-of-way over event participants and event safety craft. The races will stop for oncoming freighter or commercial traffic and will resume after the vessel has completed its passage through the regulated area. COTP or a designated representative may direct the anchoring, mooring, or movement of any boat or vessel within the regatta area. A succession of sharp, short signals by whistle or horn from vessels patrolling the area under the direction of the COTP or a designated representative shall serve as a signal to stop. Vessels so signaled must stop and comply with the orders of the COTP or a designated representative. Failure to do so may result in expulsion from the area, citation for failure to comply, or both. The COTP or a designated representative may establish vessel size and speed limitations and operating conditions and may restrict vessel operation within the regatta area to vessels having particular operating characteristics. The COTP or a

designated representative may terminate the marine event or the operation of any vessel at any time it is deemed necessary for the protection of life and property.

(3) *Patrol Commander* means a Coast Guard commissioned, warrant, or petty officer who has been designated by the COTP to monitor a regatta area, permit entry into the regatta area, give legally enforceable orders to persons or vessels within the regatta area, and take other actions authorized by the COTP. The Patrol Commander will be aboard either a Coast Guard or Coast Guard Auxiliary vessel. The Patrol Commander may be contacted on VHF–FM Marine Channel 16 by the call sign ''Coast Guard Patrol Commander.''

Dated: June 4, 2019.

Jeffrey W. Novak,

Captain, U.S. Coast Guard, Captain of the Port Detroit.

[FR Doc. 2019–12845 Filed 6–17–19; 8:45 am]

BILLING CODE 9110–04–P

DEPARTMENT OF HOMELAND SECURITY

Coast Guard

33 CFR Part 165

[Docket Number USCG–2019–0290]

RIN 1625–AA00

Safety Zone; Creative Day Technologies Mackinac Island Fireworks, Mackinac Island, MI

AGENCY: Coast Guard, DHS.

ACTION: Temporary final rule.

SUMMARY: The Coast Guard is establishing a temporary safety zone in the Straits of Mackinac near Mackinac Island, MI. The temporary safety zone is needed to protect vessels and spectators from the hazards associated with a fireworks show during the Creative Day Technologies Mackinac Island Fireworks. Entry of vessels or persons into this zone is prohibited unless specifically authorized by the Captain of the Port Sector Sault Sainte Marie or a designated representative.

DATES: This rule is effective from 9:30 p.m. to 10:30 p.m., June 26, 2019.

ADDRESSES: To view documents mentioned in this preamble as being available in the docket, go to *http://www.regulations.gov,* type USCG–2019–0290 in the ''SEARCH'' box and click ''SEARCH.'' Click on Open Docket Folder on the line associated with this rule.

FOR FURTHER INFORMATION CONTACT: If you have questions on this rule, call or email MST2 Onnalee A. Blackledge, Waterways Management, Coast Guard Sector Sault Sainte Marie, U.S. Coast Guard; telephone 906–253–2443, email *sssmprevention@uscg.mil.*

SUPPLEMENTARY INFORMATION:

I. Table of Abbreviations

CFR Code of Federal Regulations
COTP Captain of the Port
DHS Department of Homeland Security
FR Federal Register
NPRM Notice of proposed rulemaking
§ Section
U.S.C. United States Code

II. Background, Purpose, and Legal Basis

The Coast Guard is issuing this temporary rule without prior notice and opportunity to comment pursuant to authority under section 4(a) of the Administrative Procedure Act (APA) (5 U.S.C. 553(b)). This provision authorizes an agency to issue a rule without prior notice and opportunity to comment when the agency, for good cause, finds that those procedures are ''impracticable, unnecessary, or contrary to the public interest.'' Under 5 U.S.C. 553(b)(B), the Coast Guard finds that good cause exists for not publishing a notice of proposed rulemaking (NPRM) with respect to this rule because doing so would be impracticable. The Coast Guard did not receive the final details of the requested safety zone with sufficient time for a comment period to run before the start of the fireworks display. Thus, delaying this rule to wait for a notice and comment period to run would be impracticable because it would inhibit the Coast Guard's ability to protect the public from the potential hazards associated with the fireworks display.

Under 5 U.S.C. 553(d)(3), the Coast Guard finds that good cause exists for making this rule effective less than 30 days after publication in the **Federal Register**. For the same reasons discussed in the preceding paragraph, a 30 day notice period would be impracticable.

III. Legal Authority and Need for Rule

The legal basis for this final rulemaking is found at 46 U.S.C 70034; 33 CFR 1.05–1, 6.04–1, 6.04–6, and 160.5; Department of Homeland Security Delegation No. 0170.1.

On June 26th 2019 from 9:30 p.m. through 10:30 p.m., Mackinac Island will have a fireworks display at position 45°50′48.44″ N, 084°37′40.06″ W. The maximum sized shell to be used is six inches and requires a temporary safety zone of at least 420 feet. The State of Michigan regulates fireworks displays. This action is only for the temporary safety zone.

The Captain of the Port Sault Sainte Marie has determined that potential hazard associated with fireworks from 9:30 p.m. to 10:30 p.m. on June 26, 2019 will be a safety concern to anyone within a 420-foot radius of the launch site. Such hazards include premature and accidental detonations, falling and burning debris, and collisions among spectator vessels. This rule is needed to protect personnel, vessels, and the marine environment in the navigable waters within the temporary safety zone while the fireworks are being displayed.

IV. Discussion of the Rule

This rule establishes a temporary safety zone from 9:30 p.m. through 10:30 p.m. on June 26, 2019. This rule is necessary to protect the safety of spectators and vessels during the aforementioned display. The temporary safety zone will encompass all U.S. waters of Lake Huron within a 420 feet radius from 45°50′48.44″ N, 084°37′40.06″ W. The rule will be enforced to mitigate risks associated with the display.

The duration of the zone is intended to protect the safety of life and property in these navigable waters during the scheduled fireworks display. No vessel or person will be permitted to enter the temporary safety zone without obtaining permission from the Captain of the Port or a designated representative. The Captain of the Port or a designated representative may be contacted via VHF Channel 16 or at 906–635–3237.

V. Regulatory Analyses

We developed this rule after considering numerous statutes and Executive Orders related to rulemaking. Below we summarize our analyses based on a number of these statutes and Executive orders, and we discuss First Amendment rights of protestors.

A. Regulatory Planning and Review

Executive Orders 12866 and 13563 direct agencies to assess the costs and benefits of available regulatory alternatives and, if regulation is necessary, to select regulatory approaches that maximize net benefits. Executive Order 13771 directs agencies to control regulatory costs through a budgeting process. This rule has not been designated a ''significant regulatory action,'' under Executive Order 12866. Accordingly, this rule has not been reviewed by the Office of Management and Budget (OMB), and pursuant to OMB guidance it is exempt from the requirements of Executive Order 13771.

This regulatory action determination is based on the size, location, duration, and time-of-day for this temporary safety zone. Vessel traffic will be able to safely transit around this safety zone which will impact small designated area of Lake Huron near Mackinac Island for 1 hour. Moreover, the Coast Guard will issue Broadcast Notice to Mariners via VHF–FM marine channel 16 about the zone and the rule allows vessels to seek permission to enter the zone.

B. Impact on Small Entities

The Regulatory Flexibility Act of 1980, 5 U.S.C. 601–612, as amended, requires Federal agencies to consider the potential impact of regulations on small entities during rulemaking. The term ''small entities'' comprises small businesses, not-for-profit organizations that are independently owned and operated and are not dominant in their fields, and governmental jurisdictions with populations of less than 50,000. The Coast Guard certifies under 5 U.S.C. 605(b) that this rule will not have a significant economic impact on a substantial number of small entities.

While some owners or operators of vessels intending to transit the temporary safety zone may be small entities, for the reasons stated in section V.A above, this rule will not have a significant economic impact on any vessel owner or operator.

Under section 213(a) of the Small Business Regulatory Enforcement Fairness Act of 1996 (Pub. L. 104–121), we want to assist small entities in understanding this rule. If the rule would affect your small business, organization, or governmental jurisdiction and you have questions concerning its provisions or options for compliance, please contact the person listed in the **FOR FURTHER INFORMATION CONTACT** section.

Small businesses may send comments on the actions of Federal employees who enforce, or otherwise determine compliance with, Federal regulations to the Small Business and Agriculture Regulatory Enforcement Ombudsman and the Regional Small Business Regulatory Fairness Boards. The Ombudsman evaluates these actions annually and rates each agency's responsiveness to small business. If you wish to comment on actions by employees of the Coast Guard, call 1–888–REG–FAIR (1–888–734–3247). The Coast Guard will not retaliate against small entities that question or complain about this rule or any policy or action of the Coast Guard.

C. Collection of Information

This rule will not call for a new collection of information under the Paperwork Reduction Act of 1995 (44 U.S.C. 3501–3520).

D. Federalism and Indian Tribal Governments

A rule has implications for federalism under Executive Order 13132, Federalism, if it has a substantial direct effect on the States, on the relationship between the national government and the States, or on the distribution of power and responsibilities among the various levels of government. We have analyzed this rule under that Order and have determined that it is consistent with the fundamental federalism principles and preemption requirements described in Executive Order 13132.

Also, this rule does not have tribal implications under Executive Order 13175, Consultation and Coordination with Indian Tribal Governments, because it would not have a substantial direct effect on one or more Indian tribes, on the relationship between the Federal Government and Indian tribes, or on the distribution of power and responsibilities between the Federal Government and Indian tribes. If you believe this rule has implications for federalism or Indian tribes, please contact the person listed in the **FOR FURTHER INFORMATION CONTACT** section.

E. Unfunded Mandates Reform Act

The Unfunded Mandates Reform Act of 1995 (2 U.S.C. 1531–1538) requires Federal agencies to assess the effects of their discretionary regulatory actions. In particular, the Act addresses actions that may result in the expenditure by a State, local, or tribal government, in the aggregate, or by the private sector of $100,000,000 (adjusted for inflation) or more in any one year. Though this rule will not result in such an expenditure, we do discuss the effects of this rule elsewhere in this preamble.

F. Environment

We have analyzed this rule under Department of Homeland Security Management Directive 023–01 and Environmental Planning COMDTINST 5090.1 (series), which guide the Coast Guard in complying with the National Environmental Policy Act of 1969 (42 U.S.C. 4321–4370f), and determined that this action is one of a category of actions that do not individually or cumulatively have a significant effect on the human environment. This rule involves a temporary safety zone lasting one hour that will prohibit entry into a designated area. Normally such actions are categorically excluded from further review under paragraph L60(a) in Table 3–1 of U.S. Coast Guard Environmental Planning Implementing Procedures 5090.1. A Record of Environmental Consideration supporting this determination is available in the docket where indicated under **ADDRESSES**.

G. Protest Activities

The Coast Guard respects the First Amendment rights of protesters. Protesters are asked to contact the person listed in the **FOR FURTHER INFORMATION CONTACT** section to coordinate protest activities so that your message can be received without jeopardizing the safety or security of people, places or vessels.

List of Subjects in 33 CFR Part 165

Harbors, Marine safety, Navigation (water), Reporting and record keeping requirements, Security measures, Waterways.

For the reasons discussed in the preamble, the Coast Guard amends 33 CFR part 165 as follows:

PART 165—REGULATED NAVIGATION AREAS AND LIMITED ACCESS AREAS

■ 1. The authority citation for part 165 continues to read as follows:

Authority: 46 U.S.C. 70034, 70051; 33 CFR 1.05–1, 6.04–1, 6.04–6, and 160.5; Department of Homeland Security Delegation No. 0170.1.

■ 2. Add § 165.T09–0290 to read as follows:

§ 165.T09–0290 Safety Zone; Creative Day Technologies Mackinac Island Fireworks, Mackinac Island, MI.

(a) *Location.* The temporary safety zone will encompass all U.S. navigable waters of Lake Huron within a 420 foot radius of 45°50′48.44″ N, 084°37′40.06″ W.

(b) *Effective and enforcement period.* This regulation is effective and will be enforced on June 26, 2019 from 9:30 p.m. through 10:30 p.m.

(c) *Regulations.* (1) In accordance with the general regulations in § 165.23, entry into, transiting, or anchoring within this temporary safety zone is prohibited unless authorized by the Captain of the Port Sault Sainte Marie or an on-scene representative.

(2) This temporary safety zone is closed to all vessel traffic, except as may be permitted by the Captain of the Port Sault Sainte Marie or an on-scene representative.

(3) The ''on-scene representative'' of the Captain of the Port Sault Sainte Marie is any Coast Guard commissioned, warrant or petty officer who has been designated by the Captain

of the Port Sault Sainte Marie to act on his or her behalf. The on-scene representative of the Captain of the Port Sault Sainte Marie will be aboard a Coast Guard vessel.

(4) Vessel Operators desiring to enter or operate within the temporary safety zone shall contact the Captain of the Port Sault Sainte Marie, or an on-scene representative to obtain permission to do so. The Captain of the Port Sault Sainte Marie or his on-scene representative may be contacted via VHF Channel 16 or at (906) 635–3237. Vessel operators given permission to enter or operate in the temporary safety zone must comply with all directions given to them by the Captain of the Port, Sault Sainte Marie or his on-scene representative.

Dated: June 11, 2019.

P.S. Nelson,

Captain, U.S. Coast Guard, Captain of the Port Sault Sainte Marie.

[FR Doc. 2019–12805 Filed 6–17–19; 8:45 am]

BILLING CODE 9110–04–P

DEPARTMENT OF HOMELAND SECURITY

Coast Guard

33 CFR Part 165

[Docket Number USCG–2019–0411]

RIN 1625–AA00

Safety Zone; Blazing Paddles, Cuyahoga River, Cleveland, OH

AGENCY: Coast Guard, DHS.

ACTION: Temporary final rule.

SUMMARY: The Coast Guard is establishing a temporary safety zone for certain waters of the Cuyahoga River during the Blazing Paddles Stand Up Paddle Race. This safety zone is intended to restrict vessels from a portion of the Cuyahoga River during the event. This temporary safety zone is necessary to protect mariners and racers from the navigational hazards associated with Standup Paddleboard Race. Entry of vessels or persons into this zone is prohibited unless specifically authorized by the Captain of the Port Buffalo.

DATES: This rule is effective from 7:45 a.m. through 2:30 p.m. on June 22, 2019.

ADDRESSES: To view documents mentioned in this preamble as being available in the docket, go to *http://www.regulations.gov,* type USCG–2019–0411 in the ''SEARCH'' box and click ''SEARCH.'' Click on Open Docket Folder on the line associated with this rule.

FOR FURTHER INFORMATION CONTACT: If you have questions on this rule, call or email LT Ryan Junod, Chief of Waterways Management, U.S. Coast Guard Marine Safety Unit Cleveland; telephone 216–937–0124, email *D09-SMB-MSUCleveland-WWM@uscg.mil.*

SUPPLEMENTARY INFORMATION:

I. Table of Abbreviations

CFR Code of Federal Regulations
DHS Department of Homeland Security
FR Federal Register
NPRM Notice of proposed rulemaking
§ Section
U.S.C. United States Code

II. Background Information and Regulatory History

The Coast Guard is issuing this temporary rule without prior notice and opportunity to comment pursuant to authority under section 4(a) of the Administrative Procedure Act (APA) (5 U.S.C. 553(b)). This provision authorizes an agency to issue a rule without prior notice and opportunity to comment when the agency for good cause finds that those procedures are ''impracticable, unnecessary, or contrary to the public interest.'' On April 26, 2019 the Captain of the Port (COTP) Buffalo published a notice of proposed rulemaking (NPRM), Docket Number USCG–2019–0121, to include safety zones for annual events into a final rule. This event was included in that NPRM. Its purpose was to mitigate potential threats to personnel, vessels, and the marine environment in the navigable waters within the specified safety zones. The NPRM addressed these concerns, and invited public comments, which ended on May 28, 2019. As such, it is unnecessary to publish a separate NPRM for this event, as the public previously had the opportunity to comment on it, and no comments were received.

Under 5 U.S.C. 553(d)(3), the Coast Guard finds that good cause exists for making this rule effective less than 30 days after final publication in the **Federal Register** because doing so would be impracticable and contrary to the public interest. Delaying the effective date of this rule to wait for final publication would inhibit the Coast Guard's ability to protect spectators and vessels from the hazards associated with a stand up paddleboard race.

III. Legal Authority and Need for Rule

The Coast Guard is issuing this rule under authority in 46 U.S.C. 70034 (previously 33 U.S.C. 1231). The COTP has determined that a large-scale paddle craft event on a navigable waterway will pose a significant risk to participants and the boating public. This rule is needed to protect personnel, vessels, and the marine environment in the navigable waters within the safety zone while the Blazing Paddles Race is happening.

IV. Discussion of the Rule

This rule establishes a safety zone from 7:45 a.m. through 2:30 p.m. on June 22, 2019. The safety zone will cover all navigable waters at the start point at position 41°29′36″ N and 081°42′13″ W to the turnaround point at position 41°28′52″ N and 081°40′33″ W and returning to the starting point on the Cuyahoga River; Cleveland, OH. The duration of the zone is intended to ensure the safety of vessels and these navigable waters before, during, and after the scheduled 8:00 a.m. through 2:00 p.m. Paddleboard Race. Entry into, transiting, or anchoring within the safety zone is prohibited unless authorized by the COTP or a designated on-scene representative. The COTP or a designated on-scene representative may be contacted via VHF Channel 16.

V. Regulatory Analyses

We developed this rule after considering numerous statutes and Executive Orders related to rulemaking. Below we summarize our analyses based on a number of these statutes and Executive Orders, and we discuss First Amendment rights of protestors.

A. Regulatory Planning and Review

Executive Orders 12866 and 13563 direct agencies to assess the costs and benefits of available regulatory alternatives and, if regulation is necessary, to select regulatory approaches that maximize net benefits. Executive Order 13771 directs agencies to control regulatory costs through a budgeting process. This rule has not been designated a ''significant regulatory action,'' under Executive Order 12866. Accordingly, this rule has not been reviewed by the Office of Management and Budget (OMB), and pursuant to OMB guidance it is exempt from the requirements of Executive Order 13771.

This regulatory action determination is based on the characteristics of the safety zone. The safety zone created by this rule will be relatively small and is designed to minimize its impact on navigable waters. Furthermore, the safety zone has been designed to allow vessels to transit around it. In addition, the safety zone will have built in times to allow vessels to travel through when races are not being held. Thus, restrictions on vessel movement within

that particular area are expected to be minimal. Under certain conditions, moreover, vessels may still transit through the safety zone when permitted by the COTP.

B. Impact on Small Entities

The Regulatory Flexibility Act of 1980, 5 U.S.C. 601–612, as amended, requires Federal agencies to consider the potential impact of regulations on small entities during rulemaking. The term ''small entities'' comprises small businesses, not-for-profit organizations that are independently owned and operated and are not dominant in their fields, and governmental jurisdictions with populations of less than 50,000. The Coast Guard certifies under 5 U.S.C. 605(b) that this rule will not have a significant economic impact on a substantial number of small entities.

While some owners or operators of vessels intending to transit the safety zone may be small entities, for the reasons stated in section V.A above, this rule will not have a significant economic impact on any vessel owner or operator.

Under section 213(a) of the Small Business Regulatory Enforcement Fairness Act of 1996 (Pub. L. 104–121), we want to assist small entities in understanding this rule. If the rule would affect your small business, organization, or governmental jurisdiction and you have questions concerning its provisions or options for compliance, please contact the person listed in the **FOR FURTHER INFORMATION CONTACT** section.

Small businesses may send comments on the actions of Federal employees who enforce, or otherwise determine compliance with, Federal regulations to the Small Business and Agriculture Regulatory Enforcement Ombudsman and the Regional Small Business Regulatory Fairness Boards. The Ombudsman evaluates these actions annually and rates each agency's responsiveness to small business. If you wish to comment on actions by employees of the Coast Guard, call 1–888–REG–FAIR (1–888–734–3247). The Coast Guard will not retaliate against small entities that question or complain about this rule or any policy or action of the Coast Guard.

C. Collection of Information

This rule will not call for a new collection of information under the Paperwork Reduction Act of 1995 (44 U.S.C. 3501–3520).

D. Federalism and Indian Tribal Governments

A rule has implications for federalism under Executive Order 13132, Federalism, if it has a substantial direct effect on the States, on the relationship between the national government and the States, or on the distribution of power and responsibilities among the various levels of government. We have analyzed this rule under that Order and have determined that it is consistent with the fundamental federalism principles and preemption requirements described in Executive Order 13132.

Also, this rule does not have tribal implications under Executive Order 13175, Consultation and Coordination with Indian Tribal Governments, because it does not have a substantial direct effect on one or more Indian tribes, on the relationship between the Federal Government and Indian tribes, or on the distribution of power and responsibilities between the Federal Government and Indian tribes. If you believe this rule has implications for federalism or Indian tribes, please contact the person listed in the **FOR FURTHER INFORMATION CONTACT** section.

E. Unfunded Mandates Reform Act

The Unfunded Mandates Reform Act of 1995 (2 U.S.C. 1531–1538) requires Federal agencies to assess the effects of their discretionary regulatory actions. In particular, the Act addresses actions that may result in the expenditure by a State, local, or tribal government, in the aggregate, or by the private sector of $100,000,000 (adjusted for inflation) or more in any one year. Though this rule will not result in such an expenditure, we do discuss the effects of this rule elsewhere in this preamble.

F. Environment

We have analyzed this rule under Department of Homeland Security Directive 023–01 and Environmental Planning COMDTINST 5090.1 (series), which guide the Coast Guard in complying with the National Environmental Policy Act of 1969 (42 U.S.C. 4321–4370f), and have determined that this action is one of a category of actions that do not individually or cumulatively have a significant effect on the human environment. This rule involves establishment of a safety zone. It is categorically excluded from further review under paragraph L60(a) in Table 3–1 of U.S. Coast Guard Environmental Planning Implementing Procedures 5090.1. A Record of Environmental Consideration supporting this determination is available in the docket where indicated under **ADDRESSES**.

G. Protest Activities

The Coast Guard respects the First Amendment rights of protesters. Protesters are asked to contact the person listed in the **FOR FURTHER INFORMATION CONTACT** section to coordinate protest activities so that your message can be received without jeopardizing the safety or security of people, places or vessels.

List of Subjects in 33 CFR Part 165

Harbors, Marine safety, Navigation (water), Reporting and recordkeeping requirements, Security measures, Waterways.

For the reasons discussed in the preamble, the Coast Guard amends 33 CFR part 165 as follows:

PART 165—REGULATED NAVIGATION AREAS AND LIMITED ACCESS AREAS

■ 1. The authority citation for part 165 continues to read as follows:

Authority: 46 U.S.C. 70034, 70051; 33 CFR 1.05–1, 6.04–1, 6.04–6, and 160.5; Department of Homeland Security Delegation No. 0170.1.

■ 2. Add § 165.T09–0411 to read as follows:

§ 165.T09–0411 Safety Zone; Blazing Paddles; Cuyahoga River, Cleveland, OH.

(a) *Location.* The safety zone will encompass all waters of the Cuyahoga River in Cleveland OH, beginning at position 41°29′36″ N and 081°42′13″ W to the turnaround point at position 41°28′52″ N and 081°40′33″ (NAD 83) and returning to the starting position.

(b) *Enforcement period.* The rule in this section will be enforced from 7:45 a.m. through 2:30 p.m. on June 22, 2019.

(c) *Regulations.* (1) In accordance with the general regulations in § 165.23, entry into, transiting, or anchoring within this safety zone is prohibited unless authorized by the Captain of the Port Buffalo (COTP) or his designated on-scene representative.

(2) This safety zone is closed to all vessel traffic, except as may be permitted by the COTP or his designated on-scene representative.

(3) The ''on-scene representative'' of the COTP is any Coast Guard commissioned, warrant or petty officer who has been designated by the COTP to act on his behalf.

(4) Vessel operators desiring to enter or operate within the safety zone must contact the COTP Buffalo or his on-scene representative to obtain permission to do so. The COTP or his on-scene representative may be

contacted via VHF Channel 16 or at (216) 937–0124. Vessel operators given permission to enter or operate in the safety zone must comply with all directions given to them by the COTP or his on-scene representative.

Dated: June 12, 2019.

Joseph S. Dufresne,

Captain, U.S. Coast Guard, Captain of the Port Buffalo.

[FR Doc. 2019–12843 Filed 6–17–19; 8:45 am]

BILLING CODE 9110–04–P

DEPARTMENT OF HOMELAND SECURITY

Coast Guard

33 CFR Part 165

[Docket Number USCG–2019–0384]

RIN 1625–AA00

Safety Zone; Missouri River, Mile Markers 0–738.4, St. Louis, MO to Sioux City, IA

AGENCY: Coast Guard, DHS.

ACTION: Temporary final rule.

SUMMARY: The Coast Guard is establishing a temporary safety zone on the navigable waters of the Missouri River from mile marker (MM) 0 to MM 734.8 between St. Louis, MO and Sioux City, IA. This action is necessary to provide for the safety of persons, vessels, and the marine environment on these navigable waters as a result of flooding on the river that has resulted in some reported levee failures and is threatening to overtop additional levees. Entry of vessels or persons into this zone is prohibited unless specifically authorized by the Captain of the Port Sector Upper Mississippi River (COTP) or a designated representative.

DATES: This rule is effective without actual notice from June 18, 2019 until July 2, 2019. For the purposes of enforcement, actual notice will be provided from June 2, 2019 until June 18, 2019. This rule may be cancelled earlier if the flood conditions resolve before July 2, 2019.

ADDRESSES: To view documents mentioned in this preamble as being available in the docket, go to *https://www.regulations.gov,* type USCG–2019–0384 in the ''SEARCH'' box and click ''SEARCH.'' Click on Open Docket Folder on the line associated with this rule.

FOR FURTHER INFORMATION CONTACT: If you have questions on this rule, call or email Lieutenant Commander Christian Barger, Sector Upper Mississippi River Waterways Management Division, U.S. Coast Guard; telephone 314–269–2560, email *Christian.J.Barger@uscg.mil.*

SUPPLEMENTARY INFORMATION:

I. Table of Abbreviations

CFR Code of Federal Regulations
COTP Captain of the Port Sector Upper Mississippi River
DHS Department of Homeland Security
FR Federal Register
NPRM Notice of proposed rulemaking
§ Section
USACE United States Army Corps of Engineers
U.S.C. United States Code

II. Background Information and Regulatory History

The Coast Guard is issuing this temporary rule without prior notice and opportunity to comment pursuant to authority under section 4(a) of the Administrative Procedure Act (APA) (5 U.S.C. 553(b)). This provision authorizes an agency to issue a rule without prior notice and opportunity to comment when the agency for good cause finds that those procedures are ''impracticable, unnecessary, or contrary to the public interest.'' Under 5 U.S.C. 553(b)(B), the Coast Guard finds that good cause exists for not publishing a notice of proposed rulemaking (NPRM) with respect to this rule because it is impracticable. It is impracticable because we must establish this safety zone immediately and lack sufficient time to provide a reasonable comment period and then consider those comments before issuing this rule. The NPRM process would delay the establishment of the safety zone and compromise public safety.

Under 5 U.S.C. 553(d)(3), the Coast Guard finds that good cause exists for making this rule effective less than 30 days after publication in the **Federal Register**. Delaying this rule would be contrary to public interest because immediate action is necessary to respond to the potential safety hazards associated with floodwaters threatening to overtop levees along the river.

III. Legal Authority and Need for Rule

The Coast Guard is issuing this rule under authority in 46 U.S.C. 70034 (previously 33 U.S.C. 1231). The COTP in consultation with the United States Army Corps of Engineers (USACE) Kansas City District has determined that potential hazards associated with flood waters threaten to damage or overtop flood control levees along the river. This rule is necessary to ensure the safety of persons, vessels, and the marine environment on these navigable waters due to the flood impacts to levees.

IV. Discussion of the Rule

On June 2, 2019, the USACE Kansas City District contacted the Coast Guard to report floodwaters approaching the tops of levees along the Missouri River between Mile Marker (MM) 0 and MM 734.8 and requested a river closure to ensure the safety of persons, vessels, and the marine environment that would be significantly impacted if floodwaters overtop the levees. This rule establishes a temporary safety zone from June 2, 2019 until July 2, 2019, or until cancelled by the Captain of the Port Sector Upper Mississippi River (COTP). The safety zone will be enforced on all navigable waters of the Missouri River from MM 0 to MM 734.8, unless reduced in scope by the COTP as flood conditions warrant.

No vessel or person will be permitted to enter the safety zone without obtaining permission from the COTP or a designated representative. A designated representative is a commissioned, warrant, or petty officer of the U.S. Coast Guard (USCG) assigned to units under the operational control of USCG Sector Upper Mississippi River. To seek permission to enter, contact the COTP or a designated representative via VHF–FM channel 16, or through USCG Sector Upper Mississippi River at 314–269–2332. Persons and vessels permitted to enter the safety zone must comply with all lawful orders or directions issued by the COTP or designated representative. The COTP or a designated representative will inform the public of the effective period for the safety zone as well as any changes in the dates and times of enforcement, as well as reductions in size of the safety zone as flood conditions improve, through Local Notice to Mariners (LNMs), Broadcast Notices to Mariners (BNMs), and/or Marine Safety Information Bulletins (MSIBs), as appropriate.

V. Regulatory Analyses

We developed this rule after considering numerous statutes and Executive orders related to rulemaking. Below we summarize our analyses based on a number of these statutes and Executive orders, and we discuss First Amendment rights of protestors.

A. Regulatory Planning and Review

Executive Orders 12866 and 13563 direct agencies to assess the costs and benefits of available regulatory alternatives and, if regulation is necessary, to select regulatory approaches that maximize net benefits. Executive Order 13771 directs agencies to control regulatory costs through a budgeting process. This rule has not

been designated a ''significant regulatory action,'' under Executive Order 12866. Accordingly, this rule has not been reviewed by the Office of Management and Budget (OMB), and pursuant to OMB guidance it is exempt from the requirements of Executive Order 13771.

This regulatory action determination is based on the emergency nature of the action and after consultation with representatives of the shipping industries that use this reach of river indicate that the many shipping companies have already made arrangements to avoid this area. Moreover, the Coast Guard will issue a BNM via VHF–FM marine channel 16 about the zone, and the rule allows vessels to seek permission to enter the zone on a case-by-case basis.

B. Impact on Small Entities

The Regulatory Flexibility Act of 1980, 5 U.S.C. 601–612, as amended, requires Federal agencies to consider the potential impact of regulations on small entities during rulemaking. The term ''small entities'' comprises small businesses, not-for-profit organizations that are independently owned and operated and are not dominant in their fields, and governmental jurisdictions with populations of less than 50,000. The Coast Guard certifies under 5 U.S.C. 605(b) that this rule will not have a significant economic impact on a substantial number of small entities.

While some owners or operators of vessels intending to transit the temporary safety zone may be small entities, for the reasons stated in section V.A above, this rule will not have a significant economic impact on any vessel owner or operator.

Under section 213(a) of the Small Business Regulatory Enforcement Fairness Act of 1996 (Pub. L. 104–121), we want to assist small entities in understanding this rule. If the rule would affect your small business, organization, or governmental jurisdiction and you have questions concerning its provisions or options for compliance, please contact the person listed in the **FOR FURTHER INFORMATION CONTACT** section.

Small businesses may send comments on the actions of Federal employees who enforce, or otherwise determine compliance with, Federal regulations to the Small Business and Agriculture Regulatory Enforcement Ombudsman and the Regional Small Business Regulatory Fairness Boards. The Ombudsman evaluates these actions annually and rates each agency's responsiveness to small business. If you wish to comment on actions by employees of the Coast Guard, call 1–888–REG–FAIR (1–888–734–3247). The Coast Guard will not retaliate against small entities that question or complain about this rule or any policy or action of the Coast Guard.

C. Collection of Information

This rule will not call for a new collection of information under the Paperwork Reduction Act of 1995 (44 U.S.C. 3501–3520).

D. Federalism and Indian Tribal Governments

A rule has implications for federalism under Executive Order 13132, Federalism, if it has a substantial direct effect on the States, on the relationship between the national government and the States, or on the distribution of power and responsibilities among the various levels of government. We have analyzed this rule under that Order and have determined that it is consistent with the fundamental federalism principles and preemption requirements described in Executive Order 13132.

Also, this rule does not have tribal implications under Executive Order 13175, Consultation and Coordination with Indian Tribal Governments, because it does not have a substantial direct effect on one or more Indian tribes, on the relationship between the Federal Government and Indian tribes, or on the distribution of power and responsibilities between the Federal Government and Indian tribes. If you believe this rule has implications for federalism or Indian tribes, please contact the person listed in the **FOR FURTHER INFORMATION CONTACT** section above.

E. Unfunded Mandates Reform Act

The Unfunded Mandates Reform Act of 1995 (2 U.S.C. 1531–1538) requires Federal agencies to assess the effects of their discretionary regulatory actions. In particular, the Act addresses actions that may result in the expenditure by a State, local, or tribal government, in the aggregate, or by the private sector of $100,000,000 (adjusted for inflation) or more in any one year. Though this rule will not result in such an expenditure, we do discuss the effects of this rule elsewhere in this preamble.

F. Environment

We have analyzed this rule under Department of Homeland Security Directive 023–01 and Commandant Instruction M16475.1D, which guide the Coast Guard in complying with the National Environmental Policy Act of 1969 (42 U.S.C. 4321–4370f), and have determined that this action is one of a category of actions that do not individually or cumulatively have a significant effect on the human environment. This rule involves a temporary safety zone prohibiting entry on a 734-mile stretch of the Missouri River that is experiencing significant flooding that is impacting levees. It is categorically excluded from further review under paragraph L60 (d) of Appendix A, Table 1 of DHS Instruction Manual 023–01–001–01, Rev. 01. A Record of Environmental Consideration supporting this determination will be made available in the docket where indicated under **ADDRESSES**.

G. Protest Activities

The Coast Guard respects the First Amendment rights of protesters. Protesters are asked to contact the person listed in the **FOR FURTHER INFORMATION CONTACT** section to coordinate protest activities so that your message can be received without jeopardizing the safety or security of people, places, or vessels.

List of Subjects in 33 CFR Part 165

Harbors, Marine safety, Navigation (water), Reporting and recordkeeping requirements, Security measures, Waterways

For the reasons discussed in the preamble, the Coast Guard amends 33 CFR part 165 as follows:

PART 165—REGULATED NAVIGATION AREAS AND LIMITED ACCESS AREAS

■ 1. The authority citation for part 165 continues to read as follows:

Authority: 46 U.S.C. 70034; 46 U.S.C. 70051; 33 CFR 1.05–1, 6.04–1, 6.04–6, and 160.5; Department of Homeland Security Delegation No. 0170.1.

■ 2. Add § 165.T08–0384 to read as follows:

§ 165.T08–0384 Safety Zone; Missouri River, Mile Markers 0 to 734.8, St. Charles, MO to Sioux City, IA.

(a) *Location.* The following area is a safety zone: All waters of the Missouri River from Mile Marker (MM) 0 to MM 734.8 This section will be enforced on all navigable waters of the Missouri River, unless reduced in scope by the Captain of the Port Sector Upper Mississippi River (COTP) as flood conditions warrant.

(b) *Effective period.* This section is effective without actual notice from June 18, 2019 until July 2, 2019. For the purposes of enforcement, actual notice will be provided from June 2, 2019 until June 18, 2019. This section may be cancelled earlier if the flood conditions resolve before July 2, 2019.

(c) *Regulations.* (1) In accordance with the general safety zone regulations in § 165.23, entry of persons or vessels into this safety zone described in paragraph (a) of this section is prohibited unless authorized by the COTP or a designated representative. A designated representative is a commissioned, warrant, or petty officer of the U.S. Coast Guard (USCG) assigned to units under the operational control of USCG Sector Upper Mississippi River.

(2) To seek permission to enter, contact the COTP or a designated representative via VHF–FM channel 16, or through USCG Sector Upper Mississippi River at 314–269–2332. Persons and vessels permitted to enter the safety zone must comply with all lawful orders or directions issued by the COTP or designated representative.

(d) *Informational broadcasts.* The COTP or a designated representative will inform the public of the effective period for the safety zone as well as any changes in the dates and times of enforcement, as well as reductions in size of the safety zone as flood conditions improve, through Local Notice to Mariners (LNMs), Broadcast Notices to Mariners (BNMs), and/or Marine Safety Information Bulletins (MSIBs) as appropriate.

Dated: June 2, 2019.

S.A. Stoermer,

Captain, U.S. Coast Guard, Captain of the Port Sector Upper Mississippi River.

[FR Doc. 2019–12903 Filed 6–17–19; 8:45 am]

BILLING CODE 9110–04–P

DEPARTMENT OF HOMELAND SECURITY

Coast Guard

33 CFR Part 165

[Docket No. USCG–2019–0415]

RIN 1625–AA00

Safety Zone; Harbor Beach Fireworks, Lake Huron, MI

AGENCY: Coast Guard, DHS.

ACTION: Temporary final rule.

SUMMARY: The Coast Guard is establishing a temporary safety zone for navigable waters within a 200-yard radius of a portion of Lake Huron, Harbor Beach, MI. This zone is necessary to protect spectators and vessels from potential hazards associated with the Harbor Beach Fireworks.

DATES: This temporary final rule is effective from 9:30 p.m. on July 12, 2019 through 11 p.m. on July 14, 2019.

ADDRESSES: To view documents mentioned in this preamble as being available in the docket, go to *http://www.regulations.gov,* type USCG–2019–0415 in the ''SEARCH'' box and click ''SEARCH.'' Click on Open Docket Folder on the line associated with this rule.

FOR FURTHER INFORMATION CONTACT: If you have questions on this temporary rule, call or email Tracy Girard, Prevention Department, Sector Detroit, Coast Guard; telephone 313–568–9564, or email *Tracy.M.Girard@uscg.mil.*

SUPPLEMENTARY INFORMATION:

I. Table of Abbreviations

CFR Code of Federal Regulations
COTP Captain of the Port Detroit
DHS Department of Homeland Security
FR Federal Register
NPRM Notice of Proposed Rulemaking
§ Section
U.S.C. United States Code

II. Background Information and Regulatory History

The Coast Guard is issuing this temporary rule without prior notice and opportunity to comment pursuant to authority under section 4(a) of the Administrative Procedure Act (APA) (5 U.S.C. 553(b)). This provision authorizes an agency to issue a rule without prior notice and opportunity to comment when the agency for good cause finds that those procedures are ''impracticable, unnecessary, or contrary to the public interest.'' Under 5 U.S.C. 553(b)(B), the Coast Guard finds that good cause exists for not publishing a notice of proposed rulemaking (NPRM) with respect to this rule because doing so would be impracticable. The Coast Guard did not receive the final details of this fireworks display in time to publish an NPRM. As such, it is impracticable to publish an NPRM because we lack sufficient time to provide a reasonable comment period and then consider those comments before issuing the rule.

Under 5 U.S.C. 553(d)(3), the Coast Guard finds that good cause exists for making this rule effective less than 30 days after publication in the **Federal Register**. Delaying the effective date of this rule would inhibit the Coast Guard's ability to protect participants, mariners and vessels from the hazards associated with this event.

III. Legal Authority and Need for Rule

The Coast Guard is issuing this rule under authority in 46 U.S.C. 70034. The Captain of the Port Detroit (COTP) has determined that potential hazard associated with fireworks from 9:30 p.m. on July 12, 2019 through 11 p.m. on July 14, 2019 will be a safety concern to anyone within a 200-yard radius of the launch site. This rule is needed to protect personnel, vessels, and the marine environment in the navigable waters within the safety zone while the fireworks are being displayed.

IV. Discussion of the Rule

This rule establishes a safety zone from 9:30 p.m. on July 12, 2019 through 11 p.m. on July 14, 2019. The safety zone will encompass all U.S. navigable waters of Lake Huron, Harbor Beach, MI, within a 200-yard radius of position 43°50.77′ N, 082°38.63′ W (NAD 83). No vessel or person will be permitted to enter the safety zone without obtaining permission from the COTP or a designated representative.

V. Regulatory Analyses

We developed this rule after considering numerous statutes and Executive orders related to rulemaking. Below we summarize our analyses based on a number of these statutes and Executive orders, and we discuss First Amendment rights of protestors.

A. Regulatory Planning and Review

Executive Orders 12866 and 13563 direct agencies to assess the costs and benefits of available regulatory alternatives and, if regulation is necessary, to select regulatory approaches that maximize net benefits. Executive Order 13771 directs agencies to control regulatory costs through a budgeting process. This rule has not been designated a ''significant regulatory action,'' under Executive Order 12866. Accordingly, this rule has not been reviewed by the Office of Management and Budget (OMB), and pursuant to OMB guidance it is exempt from the requirements of Executive Order 13771.

This regulatory action determination is based on the size, location, duration, and time-of-year of the safety zone. Vessel traffic will be able to safely transit around this safety zone which will impact a small designated area of Lake Huron from 9:30 p.m. on July 12, 2019 through 11 p.m. on July 14, 2019. Moreover, the Coast Guard will issue Broadcast Notice to Mariners (BNM) via VHF–FM marine channel 16 about the zone and the rule allows vessels to seek permission to enter the zone.

B. Impact on Small Entities

The Regulatory Flexibility Act of 1980, 5 U.S.C. 601–612, as amended, requires Federal agencies to consider the potential impact of regulations on small entities during rulemaking. The term ''small entities'' comprises small

businesses, not-for-profit organizations that are independently owned and operated and are not dominant in their fields, and governmental jurisdictions with populations of less than 50,000. The Coast Guard certifies under 5 U.S.C. 605(b) that this rule will not have a significant economic impact on a substantial number of small entities.

While some owners or operators of vessels intending to transit the safety zone may be small entities, for the reasons stated in section V.A above, this rule will not have a significant economic impact on any vessel owner or operator.

Under section 213(a) of the Small Business Regulatory Enforcement Fairness Act of 1996 (Pub. L. 104–121), we want to assist small entities in understanding this rule. If the rule would affect your small business, organization, or governmental jurisdiction and you have questions concerning its provisions or options for compliance, please contact the person listed in the **FOR FURTHER INFORMATION CONTACT** section.

Small businesses may send comments on the actions of Federal employees who enforce, or otherwise determine compliance with, Federal regulations to the Small Business and Agriculture Regulatory Enforcement Ombudsman and the Regional Small Business Regulatory Fairness Boards. The Ombudsman evaluates these actions annually and rates each agency's responsiveness to small business. If you wish to comment on actions by employees of the Coast Guard, call 1–888–REG–FAIR (1–888–734–3247). The Coast Guard will not retaliate against small entities that question or complain about this rule or any policy or action of the Coast Guard.

C. Collection of Information

This rule will not call for a new collection of information under the Paperwork Reduction Act of 1995 (44 U.S.C. 3501–3520).

D. Federalism and Indian Tribal Governments

A rule has implications for federalism under Executive Order 13132, Federalism, if it has a substantial direct effect on the States, on the relationship between the national government and the States, or on the distribution of power and responsibilities among the various levels of government. We have analyzed this rule under that Order and have determined that it is consistent with the fundamental federalism principles and preemption requirements described in Executive Order 13132.

Also, this rule does not have tribal implications under Executive Order 13175, Consultation and Coordination with Indian Tribal Governments, because it does not have a substantial direct effect on one or more Indian tribes, on the relationship between the Federal Government and Indian tribes, or on the distribution of power and responsibilities between the Federal Government and Indian tribes. If you believe this rule has implications for federalism or Indian tribes, please contact the person listed in the **FOR FURTHER INFORMATION CONTACT** section above.

E. Unfunded Mandates Reform Act

The Unfunded Mandates Reform Act of 1995 (2 U.S.C. 1531–1538) requires Federal agencies to assess the effects of their discretionary regulatory actions. In particular, the Act addresses actions that may result in the expenditure by a State, local, or tribal government, in the aggregate, or by the private sector of $100,000,000 (adjusted for inflation) or more in any one year. Though this rule will not result in such an expenditure, we do discuss the effects of this rule elsewhere in this preamble.

F. Environment

We have analyzed this rule under Department of Homeland Security Directive 023–01 and Environmental Planning COMDTINST 5090.1 (series), which guide the Coast Guard in complying with the National Environmental Policy Act of 1969 (42 U.S.C. 4321–4370f), and have determined that this action is one of a category of actions that do not individually or cumulatively have a significant effect on the human environment. This rule involves a safety zone lasting one and a half hours on two nights that will prohibit entry into a designated area. It is categorically excluded from further review under paragraph L60(a) in Table 3–1 of U.S. Coast Guard Environmental Planning Implementing Procedures 5090.1. A Record of Environmental Consideration supporting this determination is available in the docket where indicated under **ADDRESSES**.

G. Protest Activities

The Coast Guard respects the First Amendment rights of protesters. Protesters are asked to contact the person listed in the **FOR FURTHER INFORMATION CONTACT** section to coordinate protest activities so that your message can be received without jeopardizing the safety or security of people, places or vessels.

List of Subjects in 33 CFR Part 165

Harbors, Marine safety, Navigation (water), Reporting and recordkeeping requirements, Security measures, Waterways.

For the reasons discussed in the preamble, the Coast Guard amends 33 CFR part 165 as follows:

PART 165—REGULATED NAVIGATION AREAS AND LIMITED ACCESS AREAS

■ 1. The authority citation for part 165 continues to read as follows:

Authority: 46 U.S.C. 70034, 70051; 33 CFR 1.05–1, 6.04–1, 6.04–6, and 160.5; Department of Homeland Security Delegation No. 0170.1.

■ 2. Add § 165.T09–0415 to read as follows:

§ 165.T09–0415 Safety Zone; Harbor Beach Fireworks, Lake Huron, MI.

(a) *Location.* A safety zone is established to include all U.S. navigable waters of Lake Huron, Harbor Beach, within a 200-yard radius of position 43°50.77′ N, 082°38.63′ W (NAD 83).

(b) *Enforcement period.* The regulated area described in paragraph (a) of this section will be enforced from 9:30 p.m. until 11 p.m. on July 12, 2019 and July 13, 2019. In the case of inclement weather on July 12, 2019 or July 13, 2019, this safety zone will be enforced from 9:30 p.m. to 11 p.m. on July 14, 2019.

(c) *Regulations.* (1) No vessel or person may enter, transit through, or anchor within the safety zone unless authorized by the Captain of the Port Detroit (COTP), or his on-scene representative.

(2) The safety zone is closed to all vessel traffic, except as may be permitted by the COTP or his on-scene representative.

(3) The ''on-scene representative'' of COTP is any Coast Guard commissioned, warrant or petty officer or a Federal, State, or local law enforcement officer designated by or assisting the Captain of the Port Detroit to act on his behalf.

(4) Vessel operators shall contact the COTP or his on-scene representative to obtain permission to enter or operate within the safety zone. The COTP or his on-scene representative may be contacted via VHF Channel 16 or at (313) 568–9464. Vessel operators given permission to enter or operate in the regulated area must comply with all directions given to them by the COTP or his on-scene representative.

Dated: June 12, 2019.

Jeffrey W. Novak,

Captain, U.S. Coast Guard, Captain of the Port Detroit.

[FR Doc. 2019–12844 Filed 6–17–19; 8:45 am]

BILLING CODE 9110–04–P

DEPARTMENT OF VETERANS AFFAIRS

38 CFR Part 4

RIN 2900–AQ43

Schedule for Rating Disabilities; Infectious Diseases, Immune Disorders, and Nutritional Deficiencies

AGENCY: Department of Veterans Affairs.

ACTION: Final rule.

SUMMARY: This document amends the Department of Veterans Affairs (VA) Schedule for Rating Disabilities (VASRD) by revising the portion of the schedule that addresses infectious diseases, immune disorders, and nutritional deficiencies. The effect of this action is to ensure that the rating schedule uses current medical terminology and to provide detailed and updated criteria for evaluation of infectious diseases, immune disorders, and nutritional deficiencies for disability rating purposes.

DATES: *Effective Date:* This final rule is effective August 11, 2019.

FOR FURTHER INFORMATION CONTACT: Ioulia Vvedenskaya, M.D., M.B.A., Medical Officer, Part 4 VASRD Regulations Staff (211C), Compensation Service, Veterans Benefits Administration, Department of Veterans Affairs, 810 Vermont Avenue NW, Washington, DC 20420, *Ioulia.Vvedenskaya@va.gov,* (202) 461–9700 (This is not a toll-free telephone number).

SUPPLEMENTARY INFORMATION: VA published a proposed rule in the **Federal Register** at 84 FR 1678 on February 5, 2019, to amend 38 CFR 4.88a and 4.88b, the portion of the VASRD dealing with infectious diseases, immune disorders, and nutritional deficiencies. VA provided a 60-day public comment period, and interested persons were invited to submit written comments on or before April 8, 2019. VA received 32 comments.

One commenter supported VA's intent to eliminate obsolete terminology and substitute the most up-to-date terms and definitions for conditions such as Chronic Fatigue Syndrome. The commenter noted that this rule would help to achieve the important public policy goal of clear, effective communication among veterans, their health care providers, and the Department. Additionally, the commenter observed that it is important that what appears to be ''catch-all'' language appended to the respective disease evaluation categories be correctly phrased to minimize the likelihood that deserving patients will be excluded from care. The commenter suggested that VA should consider identifying the ''residual effects'' categories explicitly so the rating decisions and appeals would be most favorable to the veterans seeking care. The commenter further suggested that VA consider expressly recognizing that any ambiguity in the rules regarding covered residual effects should be resolved in the veteran's favor. VA makes no changes based on these comments. The proposed diagnostic codes provided examples of common residuals of specific diseases, but also made clear that the instruction to rate ''any residual disability'' from a disease ''includes, but is not limited to'' the listed examples. We believe this language is sufficiently clear and broad to ensure that any residuals identified in individual cases may be appropriately evaluated. We do not believe it is necessary or advisable to seek to list in these regulations all of the conditions that may be found to be residuals of diseases in specific cases. Further, because these rules do not restrict the conditions that may be found in individual cases to be residuals of a disease, we do not believe the regulation is restrictive or ambiguous on that issue. We note also that the principle of resolving reasonable doubt in favor of veterans is established in 38 CFR 3.102 and 4.3.

One commenter expressed an opinion that this regulatory update can be viewed as a bureaucratic move to disenfranchise veterans eligible for unspecified services. The commenter did not offer any specific recommendations and did not propose any actions. VA makes no changes based on this comment.

One commenter stated that vector-borne diseases (VBD) are of major importance to human health both locally and globally. In addition, the commenter highlighted that the precise diagnoses of many of these diseases remains a major challenge because of the lack of comprehensive data available on accurate and reliable diagnostic methods, specifically for borreliosis (Lyme disease). The commenter did not offer a specific recommendation or a course of action. VA makes no changes based on this comment.

Two commenters were concerned that by implementing a General Rating Formula (GRF) for infectious diseases, VA would drastically change veterans' ratings from 100 percent to zero percent, dependent upon whether the disease is deemed active or resolved based upon a laboratory test. Commenters noted that there is considerable evidence that laboratory tests may not always be deemed reliable and that each laboratory may have differing references ranges leading to improper reading of results. However, VA's proposed GRF did not alter the rating principles for infectious diseases, which currently provide—in individual diagnostic codes rather than a GRF—for evaluation of active diseases and residuals. Instead, we updated the format of the rating schedule to indicate that the GFR for infectious diseases would be consistent for rating these conditions and also be similar to the use of a GFR in other sections of the VASRD, such as in 38 CFR 4.97, 4.116, 4.130, and others. Currently, VA assigns a 100-percent evaluation for each specific infectious disease during an active period; thereafter, any residual functional impairment from the infectious disease determines the level of disability. VA pointed out that its proposed GFR would be a familiar concept for Veterans Benefits Administration (VBA) employees and minimize the risk for error by providing one criterion applicable to multiple diagnostic codes (DCs). Additionally, VA did not propose any laboratory testing in its GFR, but instead we proposed to confirm the recurrence of active infection for certain conditions (DCs 6301, 6304, 6311, 6312, 6316) with overlapping clinical symptoms such as pallor, fever and hepatosplenomegaly. By adding a specific reference to laboratory testing for each infection, we made an effort to distinguish one infection from another. VA makes no changes based on this comment.

Additionally, commenters were concerned that the proposed GRF would not consider veterans' ability to maintain gainful employment because many infectious diseases, even after negative laboratory test results, can cause long-lasting residual symptoms that may last up to eight weeks or longer and that lingering, residual symptoms would adversely affect a veteran's normal functioning and his/her ability to maintain gainful employment. The proposed GRF is designed to assess permanent functional impairment that resulted from long-lasting residual symptoms rather than rely solely on a specific laboratory test. The proposed

GFR directs rating personnel to rate any residual effect of acute and/or chronic infection and to determine the degree of disability within the appropriate body system using the same principles as they exist in the current rating schedule. VA's disability compensation benefits are based on the extent of average impairment of earning capacity from the service-connected injury or disease and this focus is reflected throughout the rating schedule. Therefore, VA makes no changes based on this comment.

One commenter expressed concern regarding West Nile Virus infection, stating infected individuals could experience headaches, body aches, joint pains, vomiting, diarrhea, or rash during an acute phase of the disease and that the residual symptoms could last for an extended period. The commenter specifically noted a severe complication of the West Nile Virus infection that affects the central nervous system in its acute phase and that such complications could become clinically permanent. The commenter proposed to list specific neuroinvasive diseases such as meningitis and encephalitis as residuals of West Nile Virus in § 4.88b and to be rated under the applicable DC code(s). The commenter further interpreted the note under DC 6335 that VA would rate West Nile virus infection residuals and residuals listed in § 3.317 together and was concerned that this approach would cause confusion and limit this DC to only a subset of Persian Gulf veterans who served in the Southwest Asia Theater of Operations and are entitled to presumptive service connection. VA clarifies that the note under DC 6335 concerning § 3.317 is intended solely to serve as a reference that provides guidance to the adjudicator in rating a disease under this DC. The reference to § 3.317 is not intended nor can it be read to restrict application of DC 6335 to veterans with Southwest Asia service. As West Nile infection and other similar infectious diseases have complex disability pictures that are not commonly seen by VA adjudicators, the inclusion of the § 3.317(d) reference under DC 6335 is specifically meant to assist our adjudicators in understanding the nature of the disease and, most critically, the usual residual disabilities of the disease. Referencing § 3.317(d) in the note for infectious diseases like the West Nile virus serves to impart understanding to VA adjudicators that such infectious diseases may result in various residuals or complications with physical, functional, or cognitive effects and enables adjudicators to accurately rate veterans with these diseases. In response and in order to minimize any confusion, VA has removed the notes that reference 38 CFR 3.317(d) from the Infectious Diseases rating criteria for DCs 6301, 6304, 6316, 6330, 6331, 6333–6335. VA has added the reference to 38 CFR 3.317(d) as a note in a new introductory paragraph before the rating schedule for infectious diseases, immune disorders, and nutritional deficiencies in 38 CFR 4.88b.

Additionally, commenters expressed a concern that the proposed GRF will negatively affect veterans' care and treatment. VA appreciates commenters' concerns; however, VA's Rating Schedule for Disabilities does not regulate veterans' access to clinical care. Further, as explained above, the provisions in the proposed GRF for rating active diseases and residuals are consistent with the existing provisions under individual diagnostic codes in § 4.88b and will not significantly change how VA evaluates these conditions. VA makes no changes based on these comments.

One commenter supported the need for greater simplification of the rating schedule and disability determination process and was concerned that this proposed update to the schedule for infectious disease, immune disorders and nutritional deficiencies excludes nurse practitioners and their patients. Specifically, the commenter noted that the proposed criteria for determining incapacitation related to systemic exertion intolerance disease (SEID)/chronic fatigue syndrome (CFS) require bed rest and treatment prescribed by a licensed physician and that a physician who administered diagnostic tests ruled out ongoing exertion or other medical conditions associated with fatigue. The commenter requested that the Veterans Health Administration (VHA) revise this proposed rating schedule update and add ''or nurse practitioner'' after the word ''physician'' in all sections. The commenter also asked that, in future revisions of the rating schedule, VHA recognize that thousands of veterans receive care from nurse practitioners and to include nurse practitioners in the language of the rating schedule. VA clarifies that this rulemaking pertains to the Veterans Benefits Administration (VBA) and addresses disability evaluations due to the functional impairment related to service-connected health conditions. This rulemaking does not address the scope of clinical practice for nurse practitioners. However, VBA will assess whether amendments to the list of qualifying heath care providers are necessary and such amendments, if any, will be addressed in a future proposal. VA makes no changes based on this comment.

One commenter stated that it is unfair that a National Guard soldier who was called to active duty and then immediately released upon return from the Middle East has to have manifested one of the infectious diseases listed in § 3.317 within one year from separation (aside from three exceptions), whereas an active duty solider who redeploys from Iraq or Afghanistan and serves several more years on active duty only has to show the disease within a year after separation, which may be several years after service in Iraq or Afghanistan. This comment relates to the time period prescribed in 38 CFR 3.317(c)(3) for applying the presumption of service connection for infectious diseases in veterans who served in the Southwest Asia theater of operations during the Persian Gulf War. The proposed rules pertained only to the criteria for evaluating the severity of service-connected infectious diseases, immune disorders, and nutritional deficiencies. They did not propose to address matters concerning the establishment of service connection or the operation of presumptions of service connection for any diseases. Accordingly, the comment is beyond the scope of this rulemaking. VA makes no changes based on this comment.

Multiple commenters including individual veterans, Veterans Advocacy Organizations, Veterans Service Organizations, and other professional organizations expressed a wide range of concerns regarding the proposed changes to the definition of chronic fatigue syndrome (CFS) under § 4.88a and the name change for DC 6354. Commenters thought the name change of Chronic Fatigue Syndrome (CFS) to Systemic Exertion Intolerance Disease/Chronic Fatigue Syndrome (SEID/CFS) was unwarranted and that it would create unnecessary confusion among medical providers, including non-VA medical providers. Commenters also stated that that the new name, Systemic Exertion Intolerance Disease (SEID), has not been adopted by any federal agency, nor by researchers and clinicians and that the CDC, National Institutes of Health (NIH), research publications, and materials for patients and health care providers all use the term ME/CFS. Commenters felt that VA's use of the term SEID/CFS would introduce confusion among medical providers and patients at VA and reduce VA's ability to coordinate with other federal agencies.

Commenters expressed that the proposed changes to the definition of CFS does not conform to the Kansas

Criteria (2000), the Centers for Disease Control (CDC) Chronic Multisymptom Illness (CMI) criteria, and to those used in VA-funded research into Gulf War Illness (GWI) and that the proposed definition is not compatible with the department of Defense (DoD) Congressionally Directed Medical Research Programs (CDMRP) for CMI. Commenters stated that VA's proposed combination of the Institute of Medicine (IOM) reevaluation of CFS as SEID with the 1994 Fukuda criteria for CFS presents an amalgamation that is not based in evidence nor discussed in any publications. The commenters expressed concern that VA did not follow any recommendations from the IOM, the Gulf War Research Advisory Committee (RAC), CDC, or other agencies and this combination is for an entirely new entity that is not known by World Health Organization, International Classification of Diseases, Tenth Revision (ICD–10) or other medical classification system and that the VA proposed definition is not compatible with the one mandated by DoD's CDMRP for CMI and the Kansas Criteria to qualify for GWI research funding.

Commenters noted that VA did not consult the RAC on these proposed changes and stated that the RAC is responsible for understanding the definitions and entirety of the condition. Commenters also were concerned that the proposed changes would leave those Gulf War veterans who receive care and services for CFS, vulnerable to VA manipulation of their care and services. The commenters suggested that CFS should be studied by the Gulf War research community, the veteran community, CFS researchers, the RAC, and independent medical professionals and that VA rely on the recommendations from these parties as a guide for new criteria updates and to ascertain if these changes are even warranted. Commenters also stated that VA would be directly and negatively impacting more than 300,000 Gulf War veterans suffering from Gulf War Illness by not relying on the studies from these parties and by combining, in whole or in part, the 2015 Systemic Exertion Intolerance Disease (SEID) and the 1994 Fukuda CDC criteria for Chronic Fatigue Syndrome (CFS) into what would be called SEID/CFS.

Commenters felt that VA's adoption of the Fukuda criteria is a step backwards that will perpetuate diagnostic inaccuracy and cause harm to Myalgic Encephalomyelitis/Chronic Fatigue Syndrome (ME/CFS) patients served by the VA. Commenters referenced the 2015 IOM Report to state that the Fukuda criteria were overly broad because they do not require the hallmark symptom of post-exertional malaise and should not be used because of the possibility of misdiagnosing patients with other conditions. Commenters believed that VA's reliance on outdated Fukuda diagnostic criteria would cause harm to veterans with ME/CFS through misdiagnosis and cause a mismatch with the diagnostic criteria in use elsewhere. Commenters suggested that VA adopt ME/CFS or ME/CFS/SEID title for the illness to stay in alignment with the greater ME/CFS community, to include patients, doctors, and researchers. Commenters felt that VA's proposed revisions were based on financial reasons in order to revoke benefits from existing veterans and prevent other veterans from receiving this combined diagnosis of SEID/CFS.

Commenters also provided questions and recommended that VA adopt ME/CFS instead of SEID/CFS; reject the Fukuda criteria; and adopt the IOM diagnostic criteria.

Another recommendation was for VA to revise § 4.88a to more closely mirror the diagnostic standard endorsed by the IOM and CDC and eliminate the listed exclusions to allow the veterans' examining and/or treating physician to make a final determination as to the appropriate diagnosis for veterans. In addition, commenters recommended that VA should broaden the group of medical professionals authorized to prescribe bed rest and treatment to meet the incapacitation standard.

While VA received some support for updating its definition of CFS, VA considered these comments and concerns and concluded that this proposed update to § 4.88a is premature and that additional research is needed to provide a more comprehensive way to determine the disabling effects of CFS and associated conditions. Therefore, VA is withdrawing its proposal to amend § 4.88a Chronic Fatigue Syndrome. To ensure that the full range of relevant factors is adequately addressed, VA intends to establish a work group to specifically address this condition. Upon assessment of the work group's findings, VA will determine whether amendments to § 4.88a are necessary and such amendments, if any, will be addressed in a future proposal.

VA makes one clarifying change to the criteria for a 10 percent disability rating under DC 6351, HIV-related illness. In the proposed rule, VA proposed to replace the phrase ''definite medical symptoms'' with ''HIV-related constitutional symptoms'' but stated that we would otherwise make no change to the criteria for a 10 percent evaluation. The prior criteria for a 10 percent evaluation read: ''Following development of definite medical symptoms, T4 cells of 200 or more and less than 500, and on approved medication(s), or with evidence of depression or memory loss with employment limitations.'' We proposed to revise this to read: ''Following development of HIV-related constitutional symptoms; T4 cell count between 200 and 500, and use of approved medication(s); or with evidence of depression or memory loss with employment limitations.'' In its review of the final rule, VA realized that the prior text for a 10 percent disability rating was unclear because it listed four criteria, separated by commas, but used ''and'' between the second and third criteria, while using ''or'' between the third and fourth criteria. The proposed text listed three criteria, separated by semicolons, with the second of those criteria encompassing both the second and third criteria of the prior text, joined by the word ''and''. We recognize that the combination of punctuation and conjunctions in both the prior and the propsed text could create confusion. Accordingly, VA revises the text for a 10 percent disability rating to read: ''Following development of HIV-related constitutional symptoms; T4 cell count between 200 and 500; use of approved medication(s); or with evidence of depression or memory loss with employment limitations.'' This clarifies that the text includes four separate criteria, consistent with the prior text, but will eliminate the potential confusion caused by the term ''and'' between two of those criteria. This will ensure that the provision is implemented in the manner most consistent with VA's intent and most favorable to veterans. VA appreciates the comments submitted in response to the proposed rule. Based on the rationale stated in the proposed rule and in this document, the proposed rule is adopted as a final rule with the changes noted above.

Effective Date of Final Rule

VBA personnel utilize the Veterans Benefit Management System for Rating (VBMS–R) to process disability compensation claims that involve disability evaluations made under the VASRD. In order to ensure that there is no delay in processing veterans' claims, VA must coordinate the effective date of this final rule with corresponding VBMS–R system updates. As such, this final rule will apply effective August 11, 2019, the date VBMS–R system updates related to this final rule will be complete.

Executive Orders 12866, 13563, and 13771

Executive Orders 12866 and 13563 direct agencies to assess the costs and benefits of available regulatory alternatives and, when regulation is necessary, to select regulatory approaches that maximize net benefits (including potential economic, environmental, public health and safety effects, and other advantages; distributive impacts; and equity). Executive Order 13563 (Improving Regulation and Regulatory Review) emphasizes the importance of quantifying both costs and benefits, reducing costs, harmonizing rules, and promoting flexibility. Executive Order 12866 (Regulatory Planning and Review) defines a ''significant regulatory action,'' which requires review by the Office of Management and Budget (OMB), as any regulatory action that is likely to result in a rule that may: (1) Have an annual effect on the economy of $100 million or more or adversely affect in a material way the economy, a sector of the economy, productivity, competition, jobs, the environment, public health or safety, or State, local, or tribal governments or communities; (2) Create a serious inconsistency or otherwise interfere with an action taken or planned by another agency; (3) Materially alter the budgetary impact of entitlements, grants, user fees, or loan programs or the rights and obligations of recipients thereof; or (4) Raise novel legal or policy issues arising out of legal mandates, the President's priorities, or the principles set forth in the Executive Order.

The economic, interagency, budgetary, legal, and policy implications of this regulatory action have been examined and it has been determined not to be a significant regulatory action under Executive Order 12866. VA's impact analysis can be found as a supporting document at *http://www.regulations.gov,* usually within 48 hours after the rulemaking document is published. Additionally, a copy of the rulemaking and its impact analysis are available on VA's website at *http://www.va.gov/orpm* by following the link for VA Regulations Published from FY 2004 through FYTD. This rule is not an E.O. 13771 regulatory action because this rule is not significant under E.O. 12866.

Regulatory Flexibility Act

The Secretary hereby certifies that this final rule will not have a significant economic impact on a substantial number of small entities as they are defined in the Regulatory Flexibility Act, 5 U.S.C. 601–612. This final rule will not affect any small entities. Therefore, pursuant to 5 U.S.C. 605(b), this rulemaking is exempt from the initial and final regulatory flexibility analysis requirements of sections 603 and 604.

Unfunded Mandates

The Unfunded Mandates Reform Act of 1995 requires, at 2 U.S.C. 1532, that agencies prepare an assessment of anticipated costs and benefits before issuing any rule that may result in the expenditure by State, local, and tribal governments, in the aggregate, or by the private sector, of $100 million or more (adjusted annually for inflation) in any one year. This final rule will have no such effect on State, local, and tribal governments, or on the private sector.

Paperwork Reduction Act

This final rule contains no provisions constituting a collection of information under the Paperwork Reduction Act of 1995 (44 U.S.C. 3501–3521).

Catalog of Federal Domestic Assistance

The Catalog of Federal Domestic Assistance program numbers and titles for this rule are 64.102, Compensation for Service-Connected Deaths for Veterans' Dependents; 64.105, Pension to Veterans, Surviving Spouses, and Children; 64.109, Veterans Compensation for Service-Connected Disability; and 64.110, Veterans Dependency and Indemnity Compensation for Service-Connected Death.

List of Subjects in 38 CFR Part 4

Disability benefits, Pensions, Veterans.

Signing Authority

The Secretary of Veterans Affairs approved this document and authorized the undersigned to sign and submit the document to the Office of the Federal Register for publication electronically as an official document of the Department of Veterans Affairs. Robert L. Wilkie, Secretary, Department of Veterans Affairs, approved this document on May 20, 2019, for publication.

Dated: May 20, 2019.

Jeffrey M. Martin,

Assistant Director, Office of Regulation Policy & Management, Office of the Secretary, Department of Veterans Affairs.

For the reasons stated in the preamble, the Department of Veterans Affairs amends 38 CFR part 4 as set forth below:

PART 4—SCHEDULE FOR RATING DISABILITIES

■ 1. The authority citation for part 4 continues to read as follows:

Authority: 38 U.S.C. 1155, unless otherwise noted.

■ 2. Amend § 4.88b by:
■ a. Adding introductory text;
■ b. Adding the entry ''General Rating Formula for Infectious Diseases:'' before the entry for diagnostic code 6300;
■ c. Revising the entries for diagnostic codes 6300 through 6302 and 6304 through 6311;
■ d. Adding in numerical order an entry for diagnostic code 6312;
■ e. Revising the entries for diagnostic codes 6316 through 6320;
■ f. Adding in numerical order entries for diagnostic codes 6325, 6326, 6329 through 6331, and 6333 through 6335; and
■ g. Revising the entries for diagnostic codes 6351 and 6354.

The additions and revisions read as follows:

§ 4.88b Schedule of ratings-infectious diseases, immune disorders, and nutritional deficiencies.

Note: Rate any residual disability of infection within the appropriate body system as indicated by the notes in the evaluation criteria. As applicable, consider the long-term health effects potentially associated with infectious diseases as listed in § 3.317(d) of this chapter, specifically Brucellosis, Campylobacter jejuni, Coxiella burnetii (Q fever), Malaria, Mycobacterium Tuberculosis, Nontyphoid Salmonella, Shigella, Visceral Leishmaniasis, and West Nile virus.

	Rating
General Rating Formula for Infectious Diseases:	
For active disease	100
After active disease has resolved, rate at 0 percent for infection. Rate any residual disability of infection within the appropriate body system.	
6300 Vibriosis (Cholera, Non-cholera):	
Evaluate under the General Rating Formula.	

	Rating
Note: Rate residuals of cholera and non-cholera vibrio infections, such as renal failure, skin, and musculoskeletal conditions, within the appropriate body system.	
6301 Visceral leishmaniasis:	
As active disease	100
Note 1: Continue a 100 percent evaluation beyond the cessation of treatment for active disease. Six months after discontinuance of such treatment, determine the appropriate disability rating by mandatory VA examination. Any change in evaluation based upon that or any subsequent examination shall be subject to the provisions of § 3.105(e) of this chapter. Thereafter, rate under the appropriate body system any residual disability of infection, which includes, but is not limited to liver damage and bone marrow disease.	
Note 2: Confirm the recurrence of active infection by culture, histopathology, or other diagnostic laboratory testing.	
6302 Leprosy (Hansen's disease):	
As active disease	100
Note: Continue a 100 percent evaluation beyond the cessation of treatment for active disease. Six months after discontinuance of such treatment, determine the appropriate disability rating by mandatory VA examination. Any change in evaluation based upon that or any subsequent examination shall be subject to the provisions of § 3.105(e) of this chapter. Thereafter, rate under the appropriate body system any residual disability of infection, which includes, but is not limited to, skin lesions, peripheral neuropathy, or amputations.	
6304 Malaria:	
Evaluate under the General Rating Formula.	
Note 1: The diagnosis of malaria, both initially and during relapse, depends on the identification of the malarial parasites in blood smears or other specific diagnostic laboratory tests such as antigen detection, immunologic (immunochromatographic) tests, and molecular testing such as polymerase chain reaction tests.	
Note 2: Rate under the appropriate body system any residual disability of infection, which includes, but is not limited to, liver or splenic damage, and central nervous system conditions.	
6305 Lymphatic filariasis, to include elephantiasis:	
Evaluate under the General Rating Formula.	
Note: Rate under the appropriate body system any residual disability of infection, which includes, but is not limited to, epididymitis, lymphangitis, lymphatic obstruction, or lymphedema affecting extremities, genitals, and/or breasts.	
6306 Bartonellosis:	
Evaluate under the General Rating Formula.	
Note: Rate under the appropriate body system any residual disability of infection, which includes, but is not limited to, endocarditis or skin lesions.	
6307 Plague:	
Evaluate under the General Rating Formula.	
Note: Rate under the appropriate body system any residual disability of infection.	
6308 Relapsing Fever:	
Evaluate under the General Rating Formula.	
Note: Rate under the appropriate body system any residual disability of infection, which includes, but is not limited to, liver or spleen damage, iritis, uveitis, or central nervous system involvement.	
6309 Rheumatic fever:	
Evaluate under the General Rating Formula.	
Note: Rate under the appropriate body system any residual disability of infection, which includes, but is not limited to, heart damage.	
6310 Syphilis, and other treponema infections:	
Note: Rate under the appropriate body system any residual disability of infection, which includes, but is not limited to, diseases of the nervous system, vascular system, eyes, or ears (*see* DC 7004, DC 8013, DC 8014, DC 8015, and DC 9301).	
6311 Tuberculosis, miliary:	
As active disease	100
Inactive disease: *See* §§ 4.88c and 4.89.	
Note 1: Confirm the recurrence of active infection by culture, histopathology, or other diagnostic laboratory testing.	
Note 2: Rate under the appropriate body system any residual disability of infection which includes, but is not limited to, skin conditions and conditions of the respiratory, central nervous, musculoskeletal, ocular, gastrointestinal, and genitourinary systems and those residuals listed in § 4.88c.	
6312 Nontuberculosis mycobacterium infection:	
As active disease	100
Note 1: Continue the rating of 100 percent for the duration of treatment for active disease followed by a mandatory VA exam. If there is no relapse, rate on residuals. Any change in evaluation based upon that or any subsequent examination shall be subject to the provisions of § 3.105(e) of this chapter.	
Note 2: Confirm the recurrence of active infection by culture, histopathology, or other diagnostic laboratory testing.	
Note 3: Rate under the appropriate body system any residual disability of infection which includes, but is not limited to, skin conditions and conditions of the respiratory, central nervous, musculoskeletal, ocular, gastrointestinal, and genitourinary systems and those residuals listed in § 4.88c.	
* * * * * * *	
6316 Brucellosis:	
Evaluate under the General Rating Formula.	
Note 1: Culture, serologic testing, or both must confirm the initial diagnosis and recurrence of active infection.	
Note 2: Rate under the appropriate body system any residual disability of infection, which includes, but is not limited to, meningitis, liver, spleen and musculoskeletal conditions.	
6317 Rickettsial, ehrlichia, and anaplasma infections:	
Evaluate under the General Rating Formula.	
Note 1: Rate under the appropriate body system any residual disability of infection, which includes, but is not limited to, bone marrow, spleen, central nervous system, and skin conditions.	

	Rating
Note 2: This diagnostic code includes, but is not limited to, scrub typhus, Rickettsial pox, African tick-borne fever, Rocky Mountain spotted fever, ehrlichiosis, or anaplasmosis.	
6318 Melioidosis:	
Evaluate under the General Rating Formula.	
Note 1: Confirm by culture or other specific diagnostic laboratory tests the initial diagnosis and any relapse or chronic activity of infection.	
Note 2: Rate under the appropriate body system any residual disability of infection, which includes, but is not limited to, arthritis, lung lesions, or meningitis.	
6319 Lyme disease:	
Evaluate under the General Rating Formula.	
Note: Rate under the appropriate body system any residual disability of infection, which includes, but is not limited to, arthritis, Bell's palsy, radiculopathy, ocular, or cognitive dysfunction.	
6320 Parasitic diseases otherwise not specified:	
Evaluate under the General Rating Formula.	
Note: Rate under the appropriate body system any residual disability of infection.	
6325 Hyperinfection syndrome or disseminated strongyloidiasis:	
As active disease	100
Note: Continue the rating of 100 percent through active disease followed by a mandatory VA exam. If there is no relapse, rate on residual disability. Any change in evaluation based upon that or any subsequent examination shall be subject to the provisions of § 3.105(e) of this chapter.	
6326 Schistosomiasis:	
As acute or asymptomatic chronic disease	0
Note: Rate under the appropriate body system any residual disability of infection, which includes, but is not limited to, conditions of the liver, intestinal system, female genital tract, genitourinary tract, or central nervous system.	
6329 Hemorrhagic fevers, including dengue, yellow fever, and others:	
Evaluate under the General Rating Formula.	
Note: Rate under the appropriate body system any residual disability of infection, which includes, but is not limited to, conditions of the central nervous system, liver, or kidney.	
6330 Campylobacter jejuni infection:	
Evaluate under the General Rating Formula.	
Note: Rate under the appropriate body system any residual disability of infection, which includes, but is not limited to, Guillain-Barre syndrome, reactive arthritis, or uveitis.	
6331 Coxiella burnetii infection (Q fever):	
Evaluate under the General Rating Formula.	
Note: Rate under the appropriate body system any residual disability of infection, which includes, but is not limited to, chronic hepatitis, endocarditis, osteomyelitis, post Q-fever chronic fatigue syndrome, or vascular infections.	
6333 Nontyphoid salmonella infections:	
Evaluate under the General Rating Formula.	
Note: Rate under the appropriate body system any residual disability of infection, which includes, but is not limited to, reactive arthritis.	
6334 Shigella infections:	
Evaluate under the General Rating Formula.	
Note: Rate under the appropriate body system any residual disability of infection, which includes, but is not limited to, hemolytic-uremic syndrome or reactive arthritis.	
6335 West Nile virus infection:	
Evaluate under the General Rating Formula.	
Note: Rate under the appropriate body system any residual disability of infection, which includes, but is not limited to, variable physical, functional, or cognitive disabilities.	
* * * * * * *	
6351 HIV-related illness:	
AIDS with recurrent opportunistic infections (see Note 3) or with secondary diseases afflicting multiple body systems; HIV-related illness with debility and progressive weight loss	100
Refractory constitutional symptoms, diarrhea, and pathological weight loss; or minimum rating following development of AIDS-related opportunistic infection or neoplasm	60
Recurrent constitutional symptoms, intermittent diarrhea, and use of approved medication(s); or minimum rating with T4 cell count less than 200	30
Following development of HIV-related constitutional symptoms; T4 cell count between 200 and 500; use of approved medication(s); or with evidence of depression or memory loss with employment limitations	10
Asymptomatic, following initial diagnosis of HIV infection, with or without lymphadenopathy or decreased T4 cell count	0
Note 1: In addition to standard therapies and regimens, the term "approved medication(s)" includes treatment regimens and medications prescribed as part of a research protocol at an accredited medical institution.	
Note 2: Diagnosed psychiatric illness, central nervous system manifestations, opportunistic infections, and neoplasms may be rated separately under the appropriate diagnostic codes if a higher overall evaluation results, provided the disability symptoms do not overlap with evaluations otherwise assignable above.	
Note 3: The following list of opportunistic infections are considered AIDS-defining conditions, that is, a diagnosis of AIDS follows if a person has HIV and one more of these infections, regardless of the CD4 count—candidiasis of the bronchi, trachea, esophagus, or lungs; invasive cervical cancer; coccidioidomycosis; cryptococcosis; cryptosporidiosis; cytomegalovirus (particularly CMV retinitis); HIV-related encephalopathy; herpes simplex-chronic ulcers for greater than one month, or bronchitis, pneumonia, or esophagitis; histoplasmosis; isosporiasis (chronic intestinal); Kaposi's sarcoma; lymphoma; mycobacterium avium complex; tuberculosis; pneumocystis jirovecii (carinii) pneumonia; pneumonia, recurrent; progressive multifocal leukoencephalopathy; salmonella septicemia, recurrent; toxoplasmosis of the brain; and wasting syndrome due to HIV.	
6354 Chronic fatigue syndrome (CFS):	

	Rating
Debilitating fatigue, cognitive impairments (such as inability to concentrate, forgetfulness, or confusion), or a combination of other signs and symptoms:	
Which are nearly constant and so severe as to restrict routine daily activities almost completely and which may occasionally preclude self-care	100
Which are nearly constant and restrict routine daily activities to less than 50 percent of the pre-illness level; or which wax and wane, resulting in periods of incapacitation of at least six weeks total duration per year	60
Which are nearly constant and restrict routine daily activities from 50 to 75 percent of the pre-illness level; or which wax and wane, resulting in periods of incapacitation of at least four but less than six weeks total duration per year	40
Which are nearly constant and restrict routine daily activities by less than 25 percent of the pre-illness level; or which wax and wane, resulting in periods of incapacitation of at least two but less than four weeks total duration per year	20
Which wax and wane but result in periods of incapacitation of at least one but less than two weeks total duration per year; or symptoms controlled by continuous medication	10
Note: For the purpose of evaluating this disability, incapacitation exists only when a licensed physician prescribes bed rest and treatment.	

■ 3. In appendix A to part 4, amend entry 4.88b by:

■ a. Revising the entry before the entry for diagnostic code 6300;

■ b. Revising the entry for diagnostic code 6300;

■ c. Adding in numerical order an entry for diagnostic code 6301;

■ d. Revising the entries for diagnostic codes 6302 and 6304 through 6309;

■ e. Adding in numerical order entries for diagnostic codes 6310 through 6312;

■ f. Revising the entries for diagnostic codes 6316 through 6320;

■ g. Adding in numerical order entries for diagnostic codes 6325, 6326, 6329 through 6331, and 6333 through 6335; and

■ h. Revising the entries for diagnostic codes 6351 and 6354.

The revisions and additions read as follows:

APPENDIX A TO PART 4—TABLE OF AMENDMENTS AND EFFECTIVE DATES SINCE 1946

Sec.	Diagnostic code No.	
*	*	* * * * *
4.88b		Added March 11, 1969; re-designated § 4.88c November 29, 1994; § 4.88a re-designated to § 4.88b November 29, 1994; General Rating Formula for Infectious Diseases added August 11, 2019.
	6300	Criterion August 30, 1996; title, criterion, and note August 11, 2019.
	6301	Criterion, note August 11, 2019.
	6302	Criterion September 22, 1978; criterion August 30, 1996; criterion, note August 11, 2019.
	6304	Evaluation August 30, 1996; criterion, note August 11, 2019.
	6305	Criterion March 1, 1989; evaluation August 30, 1996; title, criterion, note August 11, 2019.
	6306	Evaluation August 30, 1996; criterion, note August 11, 2019.
	6307	Criterion May 13, 2018; criterion, note August 11, 2019.
	6308	Criterion August 30, 1996; criterion, note August 11, 2019.
	6309	Added March 1, 1963; criterion March 1, 1989; criterion August 30, 1996; criterion, note August 11, 2019.
	6310	Criterion, note August 11, 2019.
	6311	Criterion, note August 11, 2019.
	6312	Added August 11, 2019.
*	*	* * * * *
	6316	Evaluation March 1, 1989; evaluation August 30, 1996; criterion, note August 11, 2019.
	6317	Criterion August 30, 1996; title, criterion, note August 11, 2019.
	6318	Added March 1, 1989; criterion August 30, 1996; criterion, note August 11, 2019.
	6319	Added August 30, 1996; criterion, note August 11, 2019.
	6320	Added August 30, 1996; criterion, note August 11, 2019.
	6325	Added August 11, 2019.
	6326	Added August 11, 2019.
	6329	Added August 11, 2019.
	6330	Added August 11, 2019.
	6331	Added August 11, 2019.
	6333	Added August 11, 2019.
	6334	Added August 11, 2019.
	6335	Added August 11, 2019.
*	*	* * * * *
	6351	Added March 1, 1989; evaluation March 24, 1992; criterion August 30, 1996; criterion, note August 11, 2019.
*	*	* * * * *
	6354	Added November 29, 1994; criterion August 30, 1996; title, criterion, note August 11, 2019.
*	*	* * * * *

■ 4. Amend appendix B to part 4 by:
■ a. Revising the entries for diagnostic codes 6300 and 6305;
■ b. Adding in numerical order an entry for diagnostic code 6312;
■ c. Revising the entry for diagnostic code 6317; and
■ d. Adding in numerical order entries for diagnostic codes 6325, 6326, 6329 through 6331, and 6333 through 6335.

The revisions and additions read as follows:

APPENDIX B TO PART 4—NUMERICAL INDEX OF DISABILITIES

Diagnostic code No.	
* * * * * * *	
Infectious Diseases, Immune Disorders and Nutrional Deficiencies	
6300	Vibriosis (Cholera, Non-cholera).
* * * * * * *	
6305	Lymphatic filariasis, to include elephantiasis.
* * * * * * *	
6312	Nontuberculosis mycobacterium infection.
* * * * * * *	
6317	Rickettsial, ehrlichia, and anaplasma infections.
* * * * * * *	
6325	Hyperinfection syndrome or disseminated strongyloidiasis.
6326	Schistosomiasis.
6329	Hemorrhagic fevers, including dengue, yellow fever, and others.
6330	Campylobacter jejuni infection.
6331	Coxiella burnetii infection (Q Fever).
6333	Nontyphoid salmonella infections.
6334	Shigella infections.
6335	West Nile virus infection.
* * * * * * *	

■ 5. Amend appendix C to part 4 by:
■ a. Adding in alphabetical order an entry for ''Campylobacter jejuni infection'';
■ b. Removing the entry for ''Cholera, Asiatic'';
■ c. Adding in alphabetical order entries for ''Coxiella burnetii infection (Q Fever)'', ''Hemorrhagic fevers, including dengue, yellow fever, and others'', and ''Hyperinfection syndrome or disseminated strongyloidiasis'';
■ d. Removing the entry for ''Lymphatic filariasis'';
■ e. Adding in alphabetical order entries for ''Lymphatic filariasis, to include elephantiasis'', ''Nontuberculosis mycobacterium infection'', ''Nontyphoid salmonella infection'', ''Rickettsial, erlichial, and Anaplasma infections'', ''Schistosomiasis'' and ''Shigella infections'';
■ f. Removing the entry for ''Typhus, scrub''; and
■ g. Adding in alphabetical order entries for ''Vibriosis (Cholera, Non-cholera)'' and ''West Nile virus infection''.

The additions and revisions read as follows:

APPENDIX C TO PART 4—ALPHABETICAL INDEX OF DISABILITIES

	Diagnostic code No.
* * * * * * *	
Campylobacter jejuni infection	6330
* * * * * * *	
Coxiella burnetii infection (Q Fever)	6331
* * * * * * *	
Hemorrhagic fevers, including dengue, yellow fever, and others	6329
* * * * * * *	
Hyperinfection syndrome or disseminated strongyloidiasis	6325
* * * * * * *	
Lymphatic filariasis, to include elephantiasis	6305

APPENDIX C TO PART 4—ALPHABETICAL INDEX OF DISABILITIES—Continued

	Diagnostic code No.
* * * * * * *	
Nontuberculosis mycobacterium infection	6312
Nontyphoid salmonella infection	6333
* * * * * * *	
Rickettsial, ehrlichia, and anaplasma Infections	6317
* * * * * * *	
Schistosomiasis	6326
* * * * * * *	
Shigella infections	6334
* * * * * * *	
Vibriosis (Cholera, Non-cholera)	6300
* * * * * * *	
West Nile virus infection	6335

[FR Doc. 2019–12682 Filed 6–17–19; 8:45 am]

BILLING CODE 8320–01–P

ENVIRONMENTAL PROTECTION AGENCY

40 CFR Part 180

[EPA–HQ–OPP–2014–0560; FRL–9994–90]

Bacillus amyloliquefaciens subspecies plantarum strain FZB42; Exemption From the Requirement of a Tolerance

AGENCY: Environmental Protection Agency (EPA).

ACTION: Final rule.

SUMMARY: This regulation establishes an exemption from the requirement of a tolerance for residues of *Bacillus amyloliquefaciens* subspecies *plantarum* strain FZB42 in or on all food commodities when used in accordance with label directions and good agricultural practices. Andermatt Biocontrol AG (c/o SciReg, Inc.) submitted a petition to EPA under the Federal Food, Drug, and Cosmetic Act (FFDCA), requesting an exemption from the requirement of a tolerance. This regulation eliminates the need to establish a maximum permissible level for residues of *Bacillus amyloliquefaciens* subspecies *plantarum* strain FZB42 in or on all food commodities under FFDCA.

DATES: This regulation is effective June 18, 2019. Objections and requests for hearings must be received on or before August 19, 2019 and must be filed in accordance with the instructions provided in 40 CFR part 178 (see also Unit I.C. of the **SUPPLEMENTARY INFORMATION**).

ADDRESSES: The docket for this action, identified by docket identification (ID) number EPA–HQ–OPP–2014–0560, is available at *http://www.regulations.gov* or at the Office of Pesticide Programs Regulatory Public Docket (OPP Docket) in the Environmental Protection Agency Docket Center (EPA/DC), West William Jefferson Clinton Bldg., Rm. 3334, 1301 Constitution Ave. NW, Washington, DC 20460–0001. The Public Reading Room is open from 8:30 a.m. to 4:30 p.m., Monday through Friday, excluding legal holidays. The telephone number for the Public Reading Room is (202) 566–1744, and the telephone number for the OPP Docket is (703) 305–5805. Please review the visitor instructions and additional information about the docket available at *http://www.epa.gov/dockets.*

FOR FURTHER INFORMATION CONTACT: Robert McNally, Biopesticides and Pollution Prevention Division (7511P), Office of Pesticide Programs, Environmental Protection Agency, 1200 Pennsylvania Ave. NW, Washington, DC 20460–0001; main telephone number: (703) 305–7090; email address: *BPPDFRNotices@epa.gov.*

SUPPLEMENTARY INFORMATION:

I. General Information

A. Does this action apply to me?

You may be potentially affected by this action if you are an agricultural producer, food manufacturer, or pesticide manufacturer. The following list of North American Industrial Classification System (NAICS) codes is not intended to be exhaustive, but rather provides a guide to help readers determine whether this document applies to them. Potentially affected entities may include:

- Crop production (NAICS code 111).
- Animal production (NAICS code 112).
- Food manufacturing (NAICS code 311).
- Pesticide manufacturing (NAICS code 32532).

B. How can I get electronic access to other related information?

You may access a frequently updated electronic version of 40 CFR part 180 through the Government Printing Office's e-CFR site at *http://www.ecfr.gov/cgi-bin/text-idx?&c=ecfr&tpl=/ecfrbrowse/Title40/40tab_02.tpl.*

C. How can I file an objection or hearing request?

Under FFDCA section 408(g), 21 U.S.C. 346a(g), any person may file an objection to any aspect of this regulation and may also request a hearing on those objections. You must file your objection or request a hearing on this regulation in accordance with the instructions provided in 40 CFR part 178. To ensure proper receipt by EPA, you must identify docket ID number EPA–HQ–OPP–2014–0560 in the subject line on the first page of your submission. All objections and requests for a hearing must be in writing and must be received by the Hearing Clerk on or before August 19, 2019. Addresses for mail and hand delivery of objections and hearing requests are provided in 40 CFR 178.25(b).

In addition to filing an objection or hearing request with the Hearing Clerk as described in 40 CFR part 178, please

submit a copy of the filing (excluding any Confidential Business Information (CBI)) for inclusion in the public docket. Information not marked confidential pursuant to 40 CFR part 2 may be disclosed publicly by EPA without prior notice. Submit the non-CBI copy of your objection or hearing request, identified by docket ID number EPA–HQ–OPP–2014–0560, by one of the following methods:

- *Federal eRulemaking Portal: http://www.regulations.gov.* Follow the online instructions for submitting comments. Do not submit electronically any information you consider to be CBI or other information whose disclosure is restricted by statute.
- *Mail:* OPP Docket, Environmental Protection Agency Docket Center (EPA/DC), (28221T), 1200 Pennsylvania Ave. NW, Washington, DC 20460–0001.
- *Hand Delivery:* To make special arrangements for hand delivery or delivery of boxed information, please follow the instructions at *http://www.epa.gov/dockets/contacts.html.* Additional instructions on commenting or visiting the docket, along with more information about dockets generally, is available at *http://www.epa.gov/dockets.*

II. Background

In the **Federal Register** of May 18, 2018 (83 FR 23247) (FRL–9976–87), EPA issued a Notice pursuant to FFDCA section 408(d)(3), 21 U.S.C. 346a(d)(3), announcing the filing of a pesticide tolerance petition (PP 7F8620) by Andermatt Biocontrol AG, Stahlermatten 6, CH–6146 Grossdietwil, Switzerland (c/o SciReg, Inc., 12733 Director's Loop, Woodbridge, VA 22192). The petition requested that 40 CFR part 180 be amended by establishing an exemption from the requirement of a tolerance for residues of the fungicide *Bacillus amyloliquefaciens* subspecies *plantarum* strain FZB42 in or on all food commodities. That Notice referenced a summary of the petition prepared by the petitioner Andermatt Biocontrol AG and available in the docket via *http://www.regulations.gov.* Comments were received on the notice of filing. EPA's response to these comments is discussed in Unit III.C.

III. Final Rule

A. EPA's Safety Determination

Section 408(c)(2)(A)(i) of FFDCA allows EPA to establish an exemption from the requirement of a tolerance (the legal limit for a pesticide chemical residue in or on a food) only if EPA determines that the exemption is ''safe.'' Section 408(c)(2)(A)(ii) of FFDCA defines ''safe'' to mean that ''there is a reasonable certainty that no harm will result from aggregate exposure to the pesticide chemical residue, including all anticipated dietary exposures and all other exposures for which there is reliable information.'' This includes exposure through drinking water and in residential settings but does not include occupational exposure. Pursuant to FFDCA section 408(c)(2)(B), in establishing or maintaining in effect an exemption from the requirement of a tolerance, EPA must take into account the factors set forth in FFDCA section 408(b)(2)(C), which require EPA to give special consideration to exposure of infants and children to the pesticide chemical residue in establishing a tolerance or tolerance exemption and to ''ensure that there is a reasonable certainty that no harm will result to infants and children from aggregate exposure to the pesticide chemical residue. . . .'' Additionally, FFDCA section 408(b)(2)(D) requires that EPA consider ''available information concerning the cumulative effects of [a particular pesticide's] . . . residues and other substances that have a common mechanism of toxicity.''

EPA evaluated the available toxicity and exposure data on *Bacillus amyloliquefaciens* subspecies *plantarum* strain FZB42 and considered their validity, completeness, and reliability, as well as the relationship of this information to human risk. A full explanation of the data upon which EPA relied and its risk assessment based on those data can be found within the document entitled ''Federal Food, Drug, and Cosmetic Act (FFDCA) Safety Determination for *Bacillus amyloliquefaciens* subspecies *plantarum* strain FZB42'' (Safety Determination). This document, as well as other relevant information, is available in the docket for this action as described under **ADDRESSES**.

The available data demonstrated that, with regard to humans, *Bacillus amyloliquefaciens* subspecies *plantarum* strain FZB42 is not toxic, pathogenic, or infective via any route of exposure. Although there may be some exposure to residues when *Bacillus amyloliquefaciens* subspecies *plantarum* strain FZB42 is used on food commodities in accordance with label directions and good agricultural practices, dietary exposure to such residues presents no concern for adverse effects. EPA also determined that a Food Quality Protection Act (FQPA) safety factor was not necessary as part of the qualitative assessment conducted for *Bacillus amyloliquefaciens* subspecies *plantarum* strain FZB42. These findings are discussed in more detail in the Safety Determination.

Based upon its evaluation in the Safety Determination, EPA concludes that there is a reasonable certainty that no harm will result to the U.S. population, including infants and children, from aggregate exposure to residues of *Bacillus amyloliquefaciens* subspecies *plantarum* strain FZB42. Therefore, an exemption from the requirement of a tolerance is established for residues of *Bacillus amyloliquefaciens* subspecies *plantarum* strain FZB42 in or on all food commodities when used in accordance with label directions and good agricultural practices.

B. Analytical Enforcement Methodology

An analytical method is not required because EPA is establishing an exemption from the requirement of a tolerance without any numerical limitation.

C. Response to Comments

Three comments were received in response to the notice of filing. EPA reviewed the comments and determined that they are irrelevant to the tolerance exemption in this action.

IV. Statutory and Executive Order Reviews

This action establishes a tolerance exemption under FFDCA section 408(d) in response to a petition submitted to EPA. The Office of Management and Budget (OMB) has exempted these types of actions from review under Executive Order 12866, entitled ''Regulatory Planning and Review'' (58 FR 51735, October 4, 1993). Because this action has been exempted from review under Executive Order 12866, this action is not subject to Executive Order 13211, entitled ''Actions Concerning Regulations That Significantly Affect Energy Supply, Distribution, or Use'' (66 FR 28355, May 22, 2001), or Executive Order 13045, entitled ''Protection of Children from Environmental Health Risks and Safety Risks'' (62 FR 19885, April 23, 1997), nor is it considered a regulatory action under Executive Order 13771, entitled ''Reducing Regulations and Controlling Regulatory Costs'' (82 FR 9339, February 3, 2017). This action does not contain any information collections subject to OMB approval under the Paperwork Reduction Act, 44 U.S.C. 3501 *et seq.,* nor does it require any special considerations under Executive Order 12898, entitled ''Federal Actions to Address Environmental Justice in Minority Populations and Low-Income

Populations'' (59 FR 7629, February 16, 1994).

Since tolerances and exemptions that are established on the basis of a petition under FFDCA section 408(d), such as the tolerance exemption in this action, do not require the issuance of a proposed rule, the requirements of the Regulatory Flexibility Act (5 U.S.C. 601 *et seq.*) do not apply.

This action directly regulates growers, food processors, food handlers, and food retailers, not States or tribes. As a result, this action does not alter the relationships or distribution of power and responsibilities established by Congress in the preemption provisions of FFDCA section 408(n)(4). As such, EPA has determined that this action will not have a substantial direct effect on States or tribal governments, on the relationship between the national government and the States or tribal governments, or on the distribution of power and responsibilities among the various levels of government or between the Federal Government and Indian tribes. Thus, EPA has determined that Executive Order 13132, entitled ''Federalism'' (64 FR 43255, August 10, 1999), and Executive Order 13175, entitled ''Consultation and Coordination with Indian Tribal Governments'' (65 FR 67249, November 9, 2000), do not apply to this action. In addition, this action does not impose any enforceable duty or contain any unfunded mandate as described under Title II of the Unfunded Mandates Reform Act (2 U.S.C. 1501 *et seq.*).

This action does not involve any technical standards that would require EPA's consideration of voluntary consensus standards pursuant to section 12(d) of the National Technology Transfer and Advancement Act (15 U.S.C. 272 note).

V. Congressional Review Act

Pursuant to the Congressional Review Act (5 U.S.C. 801 *et seq.*), EPA will submit a report containing this rule and other required information to the U.S. Senate, the U.S. House of Representatives, and the Comptroller General of the United States prior to publication of the rule in the **Federal Register**. This action is not a ''major rule'' as defined by 5 U.S.C. 804(2).

List of Subjects in 40 CFR Part 180

Environmental protection, Administrative practice and procedure, Agricultural commodities, Pesticides and pests, Reporting and recordkeeping requirements.

Dated: June 10, 2019.

Richard Keigwin,

Director, Office of Pesticide Programs.

Therefore, 40 CFR chapter I is amended as follows:

PART 180—[AMENDED]

■ 1. The authority citation for part 180 continues to read as follows:

Authority: 21 U.S.C. 321(q), 346a and 371.

■ 2. Add § 180.1367 to subpart D to read as follows:

§ 180.1367 *Bacillus amyloliquefaciens* subspecies plantarum strain FZB42; exemption from the requirement of a tolerance.

An exemption from the requirement of a tolerance is established for residues of *Bacillus amyloliquefaciens* subspecies ***plantarum*** strain FZB42 in or on all food commodities when used in accordance with label directions and good agricultural practices.

[FR Doc. 2019–12748 Filed 6–17–19; 8:45 am]

BILLING CODE 6560–50–P

DEPARTMENT OF COMMERCE

National Oceanic and Atmospheric Administration

50 CFR Part 679

[Docket No. 180713633–9174–02]

RIN 0648–XH059

Fisheries of the Exclusive Economic Zone Off Alaska; Reallocation of Pollock in the Bering Sea and Aleutian Islands

AGENCY: National Marine Fisheries Service (NMFS), National Oceanic and Atmospheric Administration (NOAA), Commerce.

ACTION: Temporary rule.

SUMMARY: NMFS is reallocating the projected unused amounts of the Aleut Corporation's pollock directed fishing allowances from the Aleutian Islands subarea to the Bering Sea subarea directed fisheries. These actions are necessary to provide opportunity for harvest of the 2019 total allowable catch of pollock, consistent with the goals and objectives of the Fishery Management Plan for Groundfish of the Bering Sea and Aleutian Islands (BSAI) Management Area.

DATES: Effective 1200 hrs, Alaska local time (A.l.t.), June 13, 2019, until 2400 hrs, A.l.t., December 31, 2019.

FOR FURTHER INFORMATION CONTACT: Steve Whitney, 907–586–7228.

SUPPLEMENTARY INFORMATION: NMFS manages the groundfish fishery in the BSAI exclusive economic zone according to the Fishery Management Plan for Groundfish of the Bering Sea and Aleutian Islands Management Area (FMP) prepared by the North Pacific Fishery Management Council (Council) under authority of the Magnuson-Stevens Fishery Conservation and Management Act. Regulations governing fishing by U.S. vessels in accordance with the FMP appear at subpart H of 50 CFR part 600 and 50 CFR part 679.

In the Aleutian Islands subarea, the portion of the 2019 pollock total allowable catch (TAC) allocated to the Aleut Corporation's directed fishing allowance (DFA) is 14,700 metric tons (mt) as established by the final 2019 and 2020 harvest specifications for groundfish in the BSAI (84 FR 9000, March 13, 2019).

As of June 12, 2019, the Administrator, Alaska Region, NMFS, (Regional Administrator) has determined that 14,600 mt of Aleut Corporation's DFA in the Aleutian Islands subarea will not be harvested. Therefore, in accordance with § 679.20(a)(5)(iii)(B)(*4*), NMFS reallocates 14,600 mt of Aleut Corporation's DFA from the Aleutian Islands subarea to the 2019 Bering Sea subarea allocations. The 14,600 mt of pollock in the Bering Sea subarea is apportioned to the AFA Inshore sector (50 percent), AFA catcher/processor sector (40 percent), and the AFA mothership sector (10 percent). The 2019 Bering Sea subarea pollock incidental catch allowance remains at 46,520 mt. As a result, the 2019 harvest specifications for pollock in the Aleutian Islands subarea included in the final 2019 and 2020 harvest specifications for groundfish in the BSAI (84 FR 9000, March 13, 2019 and 84 FR 9976, March 19, 2019) are revised as follows: 100 mt to Aleut Corporation's DFA. Furthermore, pursuant to § 679.20(a)(5), Table 4 of the final 2019 and 2020 harvest specifications for groundfish in the BSAI (84 FR 9000, March 13, 2019 and 84 FR 9976, March 19, 2019) is revised to make 2019 pollock allocations consistent with this reallocation.

TABLE 4—FINAL 2019 ALLOCATIONS OF POLLOCK TACS TO THE DIRECTED POLLOCK FISHERIES AND TO THE CDQ DIRECTED FISHING ALLOWANCES (DFA) [1]

[Amounts are in metric tons]

Area and sector	2019 Allocations	2019 A season [1]		2019 B season [1]
		A season DFA	SCA harvest limit [2]	B season DFA
Bering Sea subarea TAC [1]	1,413,500	n/a	n/a	n/a
CDQ DFA	141,600	63,720	39,648	77,880
ICA [1]	46,520	n/a	n/a	n/a
Total Bering Sea non-CDQ DFA	1,225,380	551,421	343,106	673,959
AFA Inshore	612,690	275,711	171,553	336,980
AFA Catcher/Processors [3]	490,152	220,568	137,243	269,584
Catch by C/Ps	448,489	201,820	n/a	246,669
Catch by CVs [3]	41,663	18,748	n/a	22,915
Unlisted C/P Limit [4]	2,451	1,103	n/a	1,348
AFA Motherships	122,538	55,142	34,311	67,396
Excessive Harvesting Limit [5]	214,442	n/a	n/a	n/a
Excessive Processing Limit [6]	367,614	n/a	n/a	n/a
Aleutian Islands subarea ABC	52,887	n/a	n/a	n/a
Aleutian Islands subarea TAC [1]	2,500	n/a	n/a	n/a
CDQ DFA	.....	.....	n/a	.....
ICA	2,400	1,200	n/a	1,200
Aleut Corporation	100	100	n/a	.....
Area harvest limit [7]	n/a	n/a	n/a	n/a
541	15,866	n/a	n/a	n/a
542	7,933	n/a	n/a	n/a
543	2,644	n/a	n/a	n/a
Bogoslof District ICA [8]	75	n/a	n/a	n/a

[1] Pursuant to § 679.20(a)(5)(i)(A), the Bering Sea subarea pollock TAC, after subtracting the CDQ DFA (10 percent) and the ICA (3.7 percent), is allocated as a DFA as follows: Inshore sector—50 percent, catcher/processor sector (C/P)—40 percent, and mothership sector—10 percent. In the Bering Sea subarea, 45 percent of the DFA is allocated to the A season (January 20–June 10) and 55 percent of the DFA is allocated to the B season (June 10–November 1). Pursuant to § 679.20(a)(5)(iii)(B)(*2*), the annual Aleutian Islands pollock TAC, after subtracting first for the CDQ DFA (10 percent) and second for the ICA (2,400 mt), is allocated to the Aleut Corporation for a pollock directed fishery. In the Aleutian Islands subarea, the A season is allocated up to 40 percent of the ABC for Aleutian Islands pollock.

[2] In the Bering Sea subarea, pursuant to § 679.20(a)(5)(i)(C), no more than 28 percent of each sector's annual DFA may be taken from the SCA before noon, April 1.

[3] Pursuant to § 679.20(a)(5)(i)(A)(*4*), 8.5 percent of the DFA allocated to listed C/Ps shall be available for harvest only by eligible catcher vessels with a C/P endorsement delivering to listed C/Ps, unless there is a C/P sector cooperative for the year.

[4] Pursuant to § 679.20(a)(5)(i)(A)(*4*)(*iii*), the AFA unlisted catcher/processors are limited to harvesting not more than 0.5 percent of the catcher/processors sector's allocation of pollock.

[5] Pursuant to § 679.20(a)(5)(i)(A)(*6*), NMFS establishes an excessive harvesting share limit equal to 17.5 percent of the sum of the non-CDQ pollock DFAs.

[6] Pursuant to § 679.20(a)(5)(i)(A)(*7*), NMFS establishes an excessive processing share limit equal to 30.0 percent of the sum of the non-CDQ pollock DFAs.

[7] Pursuant to § 679.20(a)(5)(iii)(B)(*6*), NMFS establishes harvest limits for pollock in the A season in Area 541 of no more than 30 percent, in Area 542 of no more than 15 percent, and in Area 543 of no more than 5 percent of the Aleutian Islands pollock ABC.

[8] Pursuant to § 679.22(a)(7)(i)(B), the Bogoslof District is closed to directed fishing for pollock. The amounts specified are for incidental catch only and are not apportioned by season or sector.

Note: Seasonal or sector apportionments may not total precisely due to rounding.

Classification

This action responds to the best available information recently obtained from the fishery. The Assistant Administrator for Fisheries, NOAA (AA), finds good cause to waive the requirement to provide prior notice and opportunity for public comment pursuant to the authority set forth at 5 U.S.C. 553(b)(B) as such requirement is impracticable and contrary to the public interest. This requirement is impracticable and contrary to the public interest as it would prevent NMFS from responding to the most recent fisheries data in a timely fashion and would delay the reallocation of Aleutian Islands pollock. Since the pollock fishery opened January 20, 2019, it is important to immediately inform the industry as to the final Bering Sea subarea pollock allocations. Immediate notification is necessary to allow for the orderly conduct and efficient operation of this fishery; allow the industry to plan for the fishing season and avoid potential disruption to the fishing fleet as well as processors; and provide opportunity to harvest increased seasonal pollock allocations while value is optimum. NMFS was unable to publish a notice providing time for public comment because the most recent, relevant data only became available as of June 11, 2019.

The AA also finds good cause to waive the 30-day delay in the effective date of this action under 5 U.S.C. 553(d)(3). This finding is based upon the reasons provided above for waiver of prior notice and opportunity for public comment.

This action is required by § 679.20 and is exempt from review under Executive Order 12866.

Authority: 16 U.S.C. 1801 *et seq.*

Dated: June 13, 2019.

Peter William Cooper,

Acting Director, Office of Sustainable Fisheries, National Marine Fisheries Service.

[FR Doc. 2019–12865 Filed 6–13–19; 4:15 pm]

BILLING CODE 3510–22–P

Proposed Rules

Federal Register
Vol. 84, No. 117
Tuesday, June 18, 2019

This section of the FEDERAL REGISTER contains notices to the public of the proposed issuance of rules and regulations. The purpose of these notices is to give interested persons an opportunity to participate in the rule making prior to the adoption of the final rules.

DEPARTMENT OF ENERGY

10 CFR Part 431

[EERE–2019–BT–STD–0018]

Energy Conservation Program: Energy Conservation Standards for Distribution Transformers

AGENCY: Office of Energy Efficiency and Renewable Energy, Department of Energy.

ACTION: Request for information.

SUMMARY: The U.S. Department of Energy (''DOE'') is initiating an effort to determine whether to amend the current energy conservation standards for distribution transformers. Under the Energy Policy and Conservation Act of 1975, as amended, DOE must review these standards at least once every six years and publish either a notice of proposed rulemaking (''NOPR'') to propose new standards for distribution transformers or a notice of determination that the existing standards do not need to be amended. This request for information (''RFI'') solicits information from the public to help DOE determine whether amended standards for distribution transformers would result in significant energy savings and whether such standards would be technologically feasible and economically justified. DOE welcomes written comments from the public on any subject within the scope of this document (including topics not raised in this RFI).

DATES: Written comments and information are requested and will be accepted on or before August 2, 2019.

ADDRESSES: Interested persons are encouraged to submit comments using the Federal eRulemaking Portal at *http://www.regulations.gov.* Follow the instructions for submitting comments. Alternatively, interested persons may submit comments, identified by docket number EERE–2019–BT–STD–0018, by any of the following methods:

1. *Federal eRulemaking Portal: http://www.regulations.gov.* Follow the instructions for submitting comments.
2. *Email: DistributionTransformers2019STD0018@ee.doe.gov.* Include the docket number EERE–2019–BT–STD–0018 in the subject line of the message.
3. *Postal Mail:* Appliance and Equipment Standards Program, U.S. Department of Energy, Building Technologies Office, Mailstop EE–5B, 1000 Independence Avenue SW, Washington, DC 20585–0121. Telephone: (202) 287–1445. If possible, please submit all items on a compact disc (''CD''), in which case it is not necessary to include printed copies.
4. *Hand Delivery/Courier:* Appliance and Equipment Standards Program, U.S. Department of Energy, Building Technologies Office, 950 L'Enfant Plaza SW, 6th Floor, Washington, DC 20024. Telephone: (202) 287–1445. If possible, please submit all items on a CD, in which case it is not necessary to include printed copies.

No telefacsimilies (faxes) will be accepted. For detailed instructions on submitting comments and additional information on this process, see section III of this document.

Docket: The docket for this activity, which includes **Federal Register** notices, comments, and other supporting documents/materials, is available for review at *http://www.regulations.gov.* All documents in the docket are listed in the *http://www.regulations.gov* index. However, some documents listed in the index, such as those containing information that is exempt from public disclosure, may not be publicly available.

The docket web page can be found at *http://www.regulations.gov/#docketDetail;D=EERE-2019-BT-STD-0018.* The docket web page contains instructions on how to access all documents, including public comments, in the docket. See section III for information on how to submit comments through *http://www.regulations.gov.*

FOR FURTHER INFORMATION CONTACT:

Mr. Jeremy Dommu, U.S. Department of Energy, Office of Energy Efficiency and Renewable Energy, Building Technologies Office, EE–5B, 1000 Independence Avenue SW, Washington, DC 20585–0121. Telephone: (202) 586–9870. Email: *ApplianceStandardsQuestions@ee.doe.gov.*

Ms. Sarah Butler, U.S. Department of Energy, Office of the General Counsel, GC–33, 1000 Independence Avenue SW, Washington, DC 20585–0121. Telephone: (202) 586–1777. Email: *sarah.butler@hq.doe.gov.*

For further information on how to submit a comment or review other public comments and the docket contact the Appliance and Equipment Standards Program staff at (202) 287–1445 or by email: *ApplianceStandardsQuestions@ee.doe.gov.*

SUPPLEMENTARY INFORMATION:

Table of Contents

I. Introduction
A. Authority and Background
B. Rulemaking Process
C. Summary of the Impacts of the Amorphous Steel Market on the Current Standards for Liquid-Immersed Distribution Transformers
D. Summary of the Impacts of the Steel Market on the Current Standards for Low-Voltage Dry-Type Distribution Transformers
II. Request for Information and Comments
A. Equipment Covered by This Process
B. Market and Technology Assessment
1. Equipment Classes
2. Technology Assessment
3. Electrical Steel Market Assessment
C. Screening Analysis
D. Engineering Analysis
1. General Methodology
2. Price Inputs to Analysis
3. Load Loss Scaling
E. Distribution Channels
1. Liquid-Immersed Distribution Transformers
2. Dry-Type Distribution Transformers
F. Energy Use Analysis
1. Hourly Load Analysis
2. Monthly Load Analysis
G. Life-Cycle Cost and Payback Period Analysis
1. Base-Case Efficiency Distributions
2. Installation Costs
3. Electricity Prices
4. Future Electricity Prices
H. Shipments
1. Equipment Lifetimes
2. Purchase Price Elasticity and Refurbished Transformers
I. Manufacturer Impact Analysis
J. Other Energy Conservation Standards Topics
1. Market Failures
2. Emerging Smart Technology Market
3. Other
III. Submission of Comments

I. Introduction

A. Authority and Background

The Energy Policy and Conservation Act of 1975, as amended (''EPCA''),[1] among other things, authorizes DOE to regulate the energy efficiency of a number of consumer products and certain industrial equipment. (42 U.S.C. 6291–6317) Title III, Part C[2] of EPCA, added by Public Law 95–619, Title IV, section 441(a), established the Energy Conservation Program for Certain Industrial Equipment, which sets forth a variety of provisions designed to improve energy efficiency. This equipment includes distribution transformers, the subject of this RFI. Congress directed DOE to prescribe energy conservation standards for such equipment. (42 U.S.C. 6317(a)(2)) Congress also established energy conservation standards for low-voltage dry-type distribution transformers. (42 U.S.C. 6295(y))

The energy conservation program under EPCA consists essentially of four parts: (1) testing, (2) labeling, (3) Federal energy conservation standards, and (4) certification and enforcement procedures. Relevant provisions of EPCA include definitions (42 U.S.C. 6311), energy conservation standards (42 U.S.C. 6313), test procedures (42 U.S.C. 6314), labeling provisions (42 U.S.C. 6315), and the authority to require information and reports from manufacturers (42 U.S.C. 6316). Federal energy efficiency requirements for covered equipment established under EPCA generally supersede State laws and regulations concerning energy conservation testing, labeling, and standards. (42 U.S.C. 6316(a) and (b); 42 U.S.C. 6297)

On October 12, 2007, DOE established energy conservation standards for liquid-immersed distribution transformers and medium-voltage, dry-type (MVDT) distribution transformers. 72 FR 58190. The Energy Policy Act of 2005 (Pub. L. 109–58, EPACT 2005) amended EPCA to establish energy conservation standards for low-voltage dry-type (LVDT) distribution transformers.[3] [4] (42 U.S.C. 6295(y)) On April 18, 2013, DOE amended the energy conservation standards for liquid-immersed, MVDT, and LVDT distribution transformers.[5] 78 FR 23335 (''April 2013 standards rule'').

The amended energy conservation standards in the April 2013 standards rule were informed by a series of negotiated rulemaking sessions. DOE established subcommittees under DOE's Energy Efficiency and Renewable Energy Advisory Committee (ERAC), in accordance with the Federal Advisory Committee Act and the Negotiated Rulemaking Act, to negotiate proposed standards for the energy efficiency of MVDT and liquid-immersed distribution transformers, and LVDT distribution transformers, separately. 76 FR 45471 (July 29, 2011); 76 FR 50148 (August 12, 2011). The ERAC subcommittees consisted of representatives of parties with a defined stake in the outcome of the energy conservation standards. The ERAC subcommittee held multiple meetings to negotiate the energy conservation standards, wherein DOE presented both draft and revised engineering, life-cycle cost and national impact analyses and results, based on input from subcommittee members on a number of topics. The resulting April 2013 standards rule was informed by the content of the negotiation sessions. The negotiating committee reached an outright consensus regarding energy conservation standards for MVDT distribution transformers but not for liquid-immersed or LVDT distribution transformers. 78 FR 23346–22347.

The current energy conservation standards are located in 10 CFR 431.196. The currently applicable DOE test procedures for distribution transformers appear at 10 CFR part 431, subpart K, appendix A.

EPCA also requires that, not later than 6 years after the issuance of any final rule establishing or amending a standard, DOE must evaluate the energy conservation standards for each type of covered equipment, including those at issue here, and publish either a notice of determination that the standards do not need to be amended based on the criteria established under 42 U.S.C. 6295(n)(2), or a NOPR including new proposed energy conservation standards based on the criteria at 42 U.S.C. 6295(o). (42 U.S.C. 6316(a); 42 U.S.C. 6295(m)(1))

If DOE determines not to amend a standard based on the statutory criteria, not later than 3 years after the issuance of a final determination not to amend standards, DOE must publish either a new determination that standards for the product do not need to be amended, or a NOPR including new proposed energy conservation standards. (42 U.S.C. 6316(a); 42 U.S.C. 6295(m)(3)(B)) If DOE decides to amend the standard based on the statutory criteria, DOE must publish a final rule not later than two years after energy conservation standards are proposed. (42 U.S.C. 6316(a); 42 U.S.C. 6295(m)(3)(A))

DOE must publicize its analysis and determination to not amend standards or to propose standards and provide an opportunity for written comment. (42 U.S.C. 6316(a); 42 U.S.C. 6295(m)(2)) In making either determination, DOE must evaluate whether more stringent standards would (1) result in significant conservation of energy and (2) be both technologically feasible and economically justified. (42 U.S.C. 6316(a); 42 U.S.C. 6295(m)(1)(A)).

DOE is publishing this RFI to collect data and information to inform its decision consistent with its obligations under EPCA.

B. Rulemaking Process

DOE must follow specific statutory criteria for prescribing new or amended standards for covered equipment. EPCA requires that any new or amended energy conservation standard be designed to achieve the maximum improvement in energy or water efficiency that is technologically feasible and economically justified. (42 U.S.C. 6316(a); 42 U.S.C. 6295(o)(2)(A)) To determine whether a standard is economically justified, EPCA requires that DOE determine whether the benefits of the standard exceed its burdens by considering, to the greatest extent practicable, the following seven factors:

(1) The economic impact of the standard on the manufacturers and consumers of the affected products;

(2) The savings in operating costs throughout the estimated average life of the product compared to any increases in the initial cost, or maintenance expenses;

(3) The total projected amount of energy and water (if applicable) savings

[1] All references to EPCA in this document refer to the statute as amended through America's Water Infrastructure Act of 2018, Public Law 115–270 (October 23, 2018).

[2] For editorial reasons, upon codification in the U.S. Code, Part C was redesignated Part A–1.

[3] EPACT 2005 established that the efficiency of a low-voltage dry-type distribution transformer manufactured on or after January 1, 2007 shall be the Class I Efficiency Levels for distribution transformers specified in Table 4–2 of the ''Guide for Determining Energy Efficiency for Distribution Transformers'' published by the National Electrical Manufacturers Association (NEMA TP 1–2002).

[4] Although certain provisions pertaining to distribution transformers, including test procedures and standards for LVDT distribution transformers, have been established in the part of EPCA generally applicable to consumer products (See, 42 U.S.C. 6291(35), 6293(b)(10), 6295(y)), they are commercial equipment. Accordingly, DOE has established the regulatory requirements for distribution transformers, including LVDT distribution transformers, in 10 CFR part 431, Energy Efficiency Program for Certain Commercial and Industrial Equipment. See, 70 FR 60407 (October 18, 2005).

[5] The Technical Support Document for the April 2013 standards rule is available at the following: *https://www.regulations.gov/document?D=EERE-2010-BT-STD-0048-0760.*

likely to result directly from the standard;

(4) Any lessening of the utility or the performance of the products likely to result from the standard;

(5) The impact of any lessening of competition, as determined in writing by the Attorney General, that is likely to result from the standard;

(6) The need for national energy and water conservation; and

(7) Other factors the Secretary of Energy (Secretary) considers relevant. (42 U.S.C. 6316(a); 42 U.S.C. 6295(o)(2)(B)(i)(I)–() thrVII)).

DOE fulfills these and other applicable requirements by conducting a series of analyses throughout the rulemaking process. Table I.1 shows the individual analyses that are performed to satisfy each of the requirements within EPCA.

TABLE I.1— EPCA REQUIREMENTS AND CORRESPONDING DOE ANALYSIS

EPCA requirement	Corresponding DOE analysis
Technological feasibility	• Market and Technology Assessment. • Screening Analysis. • Engineering Analysis.
Economic Justification:	
1. Economic impact on manufacturers and consumers	• Manufacturer Impact Analysis. • Life-Cycle Cost and Payback Period Analysis. • Life-Cycle Cost Subgroup Analysis. • Shipments Analysis. • Markups for Product Price Determination.
2. Lifetime operating cost savings compared to increased cost for the product.	• Energy and Water Use Determination. • Life-Cycle Cost and Payback Period Analysis.
3. Total projected energy savings	• Shipments Analysis. • National Impact Analysis.
4. Impact on utility or performance	• Screening Analysis. • Engineering Analysis.
5. Impact of any lessening of competition	• Manufacturer Impact Analysis.
6. Need for national energy and water conservation	• Shipments Analysis. • National Impact Analysis.
7. Other factors the Secretary considers relevant	• Employment Impact Analysis. • Utility Impact Analysis. • Emissions Analysis. • Monetization of Emission Reductions Benefits. • Regulatory Impact Analysis.

As detailed throughout this RFI, DOE is publishing this document seeking input and data from interested parties to aid in the development of the technical analyses on which DOE will ultimately rely to determine whether (and if so, how) to amend the standards for distribution transformers.

C. Summary of the Impacts of the Amorphous Steel Market on the Current Standards for Liquid-Immersed Distribution Transformers

In the April 2013 standards rule, DOE set energy conservation standards for liquid-immersed distribution transformers, LVDT distribution transformers, and MVDT distribution transformers. 75 FR 23338. In its analyses of liquid-immersed distribution transformers, DOE considered seven sets of energy efficiency levels, referred to as trial standard levels (''TSL''). The levels represent increasingly stringent levels of energy conservation standards, numbered from TSL 1, the least stringent, to TSL 7, the most stringent. 78 FR 23397. DOE adopted TSL 1 energy conservation levels for liquid-immersed distribution transformers. DOE did not adopt energy efficiency levels more stringent than TSL 1 in part because of risks associated with limitations in the available supply of amorphous steel. At more stringent required standard levels DOE determined it likely that the market would transition entirely to the use of amorphous steel. 78 FR 23415–23418. DOE was concerned that if this were the case, there might not have been a sufficient supply of amorphous steel to meet manufacturers' needs. *Id.*

DOE determined that the burden of the risk that manufacturers would not be able to obtain the quantities of amorphous steel required to meet the higher efficiency requirement levels outweighed the benefits of adopting these efficiency levels. *Id.* This determination contributed to DOE's decision that the higher efficiency requirement levels were not economically justified. *Id.* Additionally, DOE acknowledged that although the industry could manufacture liquid-immersed distribution transformers at TSL 2 and TSL 3 from steels other than amorphous steel, amorphous steel was the cheapest design option for at least some of the transformer designs that were analyzed at these levels. 78 FR 23417–23418. In the analysis that led up to the April 2013 standards rule, DOE identified only one supplier that produced amorphous steel in any significant volume. DOE expressed concern that this one supplier, together with others that might enter the market, would not be able to increase production of amorphous steel rapidly enough to supply the amounts that would be needed by transformer manufactures before the compliance date of January 1, 2016, if any energy efficiency levels higher than TSL 1 were adopted. 78 FR 23414–23421

D. Summary of the Impacts of the Steel Market on the Current Standards for Low-Voltage Dry-Type Distribution Transformers

In its analyses of low-voltage dry-type distribution transformers for the April 2013 standards rule, DOE considered six sets of trial standard levels with increasingly stringent levels of energy conservation standards and adopted TSL 2 energy conservation levels. 78 FR 23337. DOE did not adopt energy efficiency levels more stringent than TSL 2 for low-voltage dry-type distribution transformers in part because of risks associated with limitations in the available supply and

quality of M4, M3, and amorphous steels.[6] 78 FR 23421. If DOE required more stringent levels of energy conservation in low-voltage dry-type distribution transformers, manufacturers of the transformers might have had to rely on M4, M3, or amorphous steels to meet those conservation standards. *Id.*

DOE was concerned that if the next most stringent energy conservation levels were adopted (TSL 3), then a significant number of small manufacturers would be unable to acquire the M4, M3 or higher quality steels in sufficient supply and quality to be able to compete. *Id.* DOE indicated that this risk to small manufacturers outweighed the benefits of adopting TSL 3 efficiency levels. *Id.* Additionally, DOE was concerned that small manufacturers might not be able to procure sufficient amounts of amorphous steel at competitive prices, if at all, if energy conservation levels TSL 4, TSL 5, or TSL 6 were adopted. *Id.* DOE indicated that the benefits of energy conservation levels TSL 4 through TSL 6 would be outweighed in part by this potential burden on manufacturers. These determinations contributed to DOE's decision that efficiency requirement levels higher than TSL 2 were not economically justified. 78 FR 23419–23421.

II. Request for Information and Comments

In the following sections, DOE has identified a variety of issues on which it seeks input to aid in the development of the technical and economic analyses regarding whether amended standards for distribution transformers may be warranted. Additionally, DOE welcomes comments on other issues relevant to the conduct of this rulemaking that may not specifically be identified in this document. In particular, DOE notes that under Executive Order 13771, ''Reducing Regulation and Controlling Regulatory Costs,'' Executive Branch agencies such as DOE are directed to manage the costs associated with the imposition of expenditures required to comply with Federal regulations. See 82 FR 9339 (Feb. 3, 2017). Consistent with that Executive Order, DOE encourages the public to provide input on measures DOE could take to lower the cost of its energy conservation standards rulemakings, recordkeeping and reporting requirements, and compliance and certification requirements applicable to distribution transformers while remaining consistent with the requirements of EPCA.

A. Equipment Covered by This Process

This RFI covers equipment that meets the definitions of distribution transformers, as codified at 10 CFR 431.192. The definitions for distribution transformers were most recently amended in an energy conservation standards final rule. 78 FR 23433. The current definition for a distribution transformer codified in 10 CFR 431.192 is the following:

Distribution transformer means a transformer that—

(1) Has an input voltage of 34.5 kV or less;

(2) Has an output voltage of 600 V or less;

(3) Is rated for operation at a frequency of 60 Hz; and

(4) Has a capacity of 10 kVA to 2500 kVA for liquid-immersed units and 15 kVA to 2500 kVA for dry-type units; but

(5) The term ''distribution transformer'' does not include a transformer that is an—

(i) Autotransformer; (ii) Drive (isolation) transformer; (iii) Grounding transformer; (iv) Machine-tool (control) transformer; (v) Nonventilated transformer; (vi) Rectifier transformer; (vii) Regulating transformer; (viii) Sealed transformer; (ix) Special-impedance transformer; (x) Testing transformer; (xi) Transformer with tap range of 20 percent or more; (xii) Uninterruptible power supply transformer; or (xiii) Welding transformer.

DOE notes that the excluded equipment listed above is specifically excluded from energy conservation standards under EPCA at 42 U.S.C. 6291(35)(B)(ii)). Definitions for these terms are at 10 CFR 431.192 as follows:

Autotransformer means a transformer that:

(1) Has one physical winding that consists of a series winding part and a common winding part;

(2) Has no isolation between its primary and secondary circuits; and

(3) During step-down operation, has a primary voltage that is equal to the total of the series and common winding voltages, and a secondary voltage that is equal to the common winding voltage.

Drive (isolation) transformer means a transformer that:

(1) Isolates an electric motor from the line;

(2) Accommodates the added loads of drive-created harmonics; and

(3) Is designed to withstand the additional mechanical stresses resulting from an alternating current adjustable frequency motor drive or a direct current motor drive.

Grounding transformer means a three-phase transformer intended primarily to provide a neutral point for system-grounding purposes, either by means of:

(1) A grounded wye primary winding and a delta secondary winding; or

(2) A transformer with its primary winding in a zig-zag winding arrangement, and with no secondary winding.

Liquid-immersed distribution transformer means a distribution transformer in which the core and coil assembly is immersed in an insulating liquid.

Machine-tool (control) transformer means a transformer that is equipped with a fuse or other over-current protection device, and is generally used for the operation of a solenoid, contactor, relay, portable tool, or localized lighting

Medium-voltage dry-type distribution transformer means a distribution transformer in which the core and coil assembly is immersed in a gaseous or dry-compound insulating medium, and which has a rated primary voltage between 601 V and 34.5 kV.

Mining distribution transformer means a medium-voltage dry-type distribution transformer that is built only for installation in an underground mine or surface mine, inside equipment for use in an underground mine or surface mine, on-board equipment for use in an underground mine or surface mine, or for equipment used for digging, drilling, or tunneling underground or above ground, and that has a nameplate which identifies the transformer as being for this use only.

Nonventilated transformer means a transformer constructed so as to prevent external air circulation through the coils of the transformer while operating at zero gauge pressure.

Rectifier transformer means a transformer that operates at the fundamental frequency of an alternating-current system and that is designed to have one or more output windings connected to a rectifier.

Regulating transformer means a transformer that varies the voltage, the phase angle, or both voltage and phase angle, of an output circuit and compensates for fluctuation of load and input voltage, phase angle or both voltage and phase angle.

Sealed transformer means a *transformer* designed to remain hermetically sealed under specified conditions of temperature and pressure.

Special-impedance transformer means any *transformer* built to operate at an impedance outside of the normal

[6] These steels are among the most common grades used in manufacture of distribution transformers. M3 and M4 are examples of ''conventional'' grain-oriented electrical steel, whereas amorphous is the lowest-loss grade and a practical necessity to reach the very highest efficiency levels.

impedance range for that *transformer's* kVA *rating.* The normal impedance range for each kVA rating for liquid-immersed and dry-type *transformers* is shown in Table II.1 and Table II.2 of this document, respectively.

TABLE II.1—NORMAL IMPEDANCE RANGES FOR LIQUID-IMMERSED DISTRIBUTION TRANSFORMERS

Single-phase transformers		Three-phase transformers	
kVA	Impedance (%)	kVA	Impedance (%)
10	1.0–4.5	15	1.0–4.5
15	1.0–4.5	30	1.0–4.5
25	1.0–4.5	45	1.0–4.5
37.5	1.0–4.5	75	1.0–5.0
50	1.5–4.5	112.5	1.2–6.0
75	1.5–4.5	150	1.2–6.0
100	1.5–4.5	225	1.2–6.0
167	1.5–4.5	300	1.2–6.0
250	1.5–6.0	500	1.5–7.0
333	1.5–6.0	750	5.0–7.5
500	1.5–7.0	1,000	5.0–7.5
667	5.0–7.5	1,500	5.0–7.5
833	5.0–7.5	2,000	5.0–7.5
		2,500	5.0–7.5

TABLE II.2—NORMAL IMPEDANCE RANGES FOR DRY-TYPE DISTRIBUTION TRANSFORMERS

Single-phase transformers		Three-phase transformers	
kVA	Impedance (%)	kVA	Impedance (%)
15	1.5–6.0	15	1.5–6.0
25	1.5–6.0	30	1.5–6.0
37.5	1.5–6.0	45	1.5–6.0
50	1.5–6.0	75	1.5–6.0
75	2.0–7.0	112.5	1.5–6.0
100	2.0–7.0	150	1.5–6.0
167	2.5–8.0	225	3.0–7.0
250	3.5–8.0	300	3.0–7.0
333	3.5–8.0	500	4.5–8.0
500	3.5–8.0	750	5.0–8.0
667	5.0–8.0	1,000	5.0–8.0
833	5.0–8.0	1,500	5.0–8.0
		2,000	5.0–8.0
		2,500	5.0–8.0

Testing transformer means a transformer used in a circuit to produce a specific voltage or current for the purpose of testing electrical equipment.

Transformer means a device consisting of 2 or more coils of insulated wire that transfers alternating current by electromagnetic induction from 1 coil to another to change the original voltage or current value.

Transformer with tap range of 20 percent or more means a transformer with multiple voltage taps, the highest of which equals at least 20 percent more than the lowest, computed based on the sum of the deviations of the voltages of these taps from the transformer's nominal voltage.

Uninterruptible power supply transformer means a transformer that is used within an uninterruptible power system, which in turn supplies power to loads that are sensitive to power failure, power sags, over voltage, switching transients, line noise, and other power quality factors.

Welding transformer means a transformer designed for use in arc welding equipment or resistance welding equipment.

Issue A.1: DOE requests comment on whether the definitions for distribution transformers require any revisions—and if so, how those definitions should be revised. In particular, DOE requests feedback regarding how closely the kVA and voltage limits mirror those of equipment generally considered to serve in a power distribution capacity. DOE also requests feedback on whether the sub-category definitions currently in place are appropriate or whether further modifications are needed. If these sub-category definitions need modifying, DOE seeks specific input on how to define these terms.

Issue A.2: DOE requests comment on whether additional equipment definitions are necessary to close any potential gaps in coverage between equipment types. DOE also seeks input on whether such products currently exist in the market or whether they are being planned for introduction. DOE also requests comment on opportunities to combine equipment classes that could reduce regulatory burden.

B. Market and Technology Assessment

The market and technology assessment that DOE routinely conducts when analyzing the impacts of a potential new or amended energy conservation standard provides information about the distribution transformers industry that will be used in DOE's analysis throughout the rulemaking process. DOE uses qualitative and quantitative information to characterize the structure of the industry and market. DOE identifies manufacturers, estimates market shares

and trends, addresses regulatory and non-regulatory initiatives intended to improve energy efficiency or reduce energy consumption, and explores the potential for efficiency improvements in the design and manufacturing of distribution transformers. DOE also reviews product literature, industry publications, and company websites. Additionally, DOE considers conducting interviews with manufacturers to improve its assessment of the market and available technologies for distribution transformers.

1. Equipment Classes

When evaluating and establishing energy conservation standards, DOE may divide covered equipment into equipment classes by the type of energy used, or by capacity or other performance-related features that justify a different standard. (42 U.S.C. 6316(a); 42 U.S.C. 6295(q)) In making a determination whether capacity or another performance-related feature justifies a different standard, DOE must consider such factors as the utility of the feature to the consumer and other factors DOE deems appropriate. (*Id.*)

There are currently eleven equipment classes for distribution transformers, one of which (mining transformers) is not presently subject to energy conservation standards. 10 CFR 431.196. Ten of the eleven equipment classes are determined according to the following characteristics: (1) Type of transformer insulation: Liquid-immersed or dry-type, (2) Number of phases: Single or three, (3) Voltage class: Low or medium (for dry-type only), and (4) Basic impulse insulation level (BIL) (for MVDT only). The eleventh equipment class is for mining transformers, which is a reserved equipment class but is not currently subject to energy conservation standards. 10 CFR 431.196(d). Table II.3 of this document lists the current 11 equipment classes for distribution transformers.

TABLE II.3—EQUIPMENT CLASSES FOR DISTRIBUTION TRANSFORMERS

EC	Insulation	Voltage	Phase	BIL rating	kVA range
1	Liquid-immersed	Medium	Single		10–833 kVA.
2	Liquid-immersed	Medium	Three		15–2500 kVA.
3	Dry-type	Low	Single		15–333 kVA.
4	Dry-type	Low	Three		15–1000 kVA.
5	Dry-type	Medium	Single	20–45kV	15–833 kVA.
6	Dry-type	Medium	Three	20–45kV	15–2500 kVA.
7	Dry-type	Medium	Single	46–95kV	15–833 kVA.
8	Dry-type	Medium	Three	46–95kV	15–2500 kVA.
9	Dry-type	Medium	Single	≥96kV	75–833 kVA.
10	Dry-type	Medium	Three	≥96kV	225–2500 kVA.
11	Mining Distribution Transformers				

In the April 2013 standards rule, DOE added a definition for mining distribution transformers. 78 FR 23353–23354; 10 CFR 431.192. In deciding not to set standards for mining distribution transformers, DOE explained that mining transformers are subject to several constraints that are not usually concerns for transformers used in general power distribution. Specifically because space is critical in mines, an underground mining transformer may be at a considerable disadvantage in meeting an efficiency standard; these transformers must supply power at several output voltages simultaneously; and mining transformers in general perform a role that may differ from general power distribution in many regards, including lifetime, loading, and often the need to supply power at several voltages simultaneously. 78 FR 23353. DOE stated that it may consider establishing energy conservation standards for mining distribution transformers at a later date. 78 FR 23354. Specifically, DOE stated that it may set standards if it believes that these transformers are being purchased as a way to circumvent energy conservation standards for distribution transformers. *Id.*

Issue B.1: DOE requests information on the sale and use of mining transformers, including information about the applications for which mining transformers are currently being used, manufacturers of mining transformers, sales data identifying end-users, and information about the selling price. DOE requests comment on whether the features of mining transformers specified in the regulatory definition limit its use to mining applications, or whether they can be repurposed for general, above-ground service. DOE also requests data characterizing the relative performance abilities of mining transformers. In addition, if use of mining transformers is observed in applications other than underground, DOE requests comments on whether there are any technical aspects of mining transformers that can be identified to improve DOE's definition of mining transformers.

In the April 2013 standards rule, DOE also received several comments regarding potential new equipment class setting factors, in addition to those used to establish the equipment classes identified in Table II.3 of this document. 78 FR 23354–23359. Specifically, Table II.4 provides the potential equipment class setting factors (categories of transformers) that were identified. These potential class setting factors could, if warranted, be used to further subdivide the distribution transformers currently subject to standards, as well as any additional distribution transformers potentially considered in a future standards rulemaking. In the April 2013 standards rule, DOE determined that these categories of transformers did not warrant separate equipment classes, and accordingly, these transformers are subject to the existing equipment classes shown in Table II.3 of this document. DOE stated that it may consider establishing separate equipment classes for the same in the future.

TABLE II.4—POTENTIAL CLASS SETTING FACTORS FOR DISTRIBUTION TRANSFORMERS

Transformer category	Description
Step-up transformers	Transformers that increase voltage from primary to secondary (more secondary winding turns than primary winding turns).
Pole-mounted transformers	Transformers that are mounted above-ground on poles.
Pad-mounted transformers	Transformers that are ground mounted, specifically in a locked steel cabinet mounted on a concrete pad.
Network transformers *	Transformers that operate within a grid configuration and connect end loads to multiple distribution transformers simultaneously; often used for redundancy and in densely populated areas.
Vault-based transformers *	Transformers that have features unique to operation in a vault, which is a fully-enclosed chamber dedicated to housing the transformer and is not easily expandable.
Submersible transformers *	Transformers that are able to maintain indefinite rated operation while submerged.
Transformers with multi-voltage capacity.	Transformers that are able to be reconfigured to accommodate different primary and secondary voltages, in addition to those that can provide multiple voltages simultaneously.

* There may be considerable overlap between ''network,'' ''vault-based,'' and ''submersible'' transformers, *i.e.,* transformers with one of the three properties may often have another. However, they are separated here as they are not always linked and carry different features and limitations.

Issue B.2: DOE requests comment on whether equipment subject to present and potential future energy conservation standards should be classified based on the factors presented in Table II.4 in any potential future energy conservation standards rulemaking. If so, DOE requests information on (i) which new equipment class(es) should be included, and, (ii) how the performance-related features of equipment in the class affect both consumer utility and efficiency. Additionally, DOE requests comment on whether DOE should consider additional equipment classes not identified in the table, information on the performance-related features that provide unique consumer utility, and data detailing the corresponding impacts on energy use that would justify separate equipment classes.

Lastly, DOE also received comments from several stakeholders indicating BIL affects efficiency in liquid-immersed distribution transformers. 78 FR 23357–23358. Specifically, some commenters suggested setting separate energy conservation standards based on BIL for liquid-immersed distribution transformers. 78 FR 23357. Commenters stated that standards by BIL rating will help differentiate transformers that require more insulation and that are less efficient. *Id.* Several other stakeholders supported the concept of exploring how BIL affects efficiency but felt that it was not a significant enough issue to delay publication of the rule. *Id.* Specifically, commenters stated that the efficiency levels under consideration do not warrant separating by BIL and pointed out that the efficiency impacts of varied BIL were smaller in liquid-immersed than in dry-type transformers. *Id.* While DOE did not include equipment class by BIL rating in the April 2013 standards rule because DOE did not find a strong technological need for such separation at the efficiency levels under consideration, DOE did state that it may consider establishing equipment classes by BIL rating when considering future standards. 78 FR 23357–23358

Issue B.3: DOE requests comment on whether separate equipment classes by BIL rating should be considered for liquid-immersed distribution transformers. If so, please describe why and provide information to characterize the effect of BIL on performance.

2. Technology Assessment

In analyzing the feasibility of potential new or amended energy conservation standards, DOE uses information about existing and past technology options and prototype designs to help identify technologies that manufacturers could use to meet and/or exceed a given set of energy conservation standards under consideration. In consultation with interested parties, DOE intends to develop a list of technologies to consider in its analysis. That analysis will likely include a number of the technology options DOE previously considered during its most recent rulemaking for distribution transformers.

In the April 2013 standards rule, DOE identified several technology options and designs considered under that rulemaking.[7] 78 FR 23359. Increases in transformer efficiency are based on reduction of transformer losses. There are two main types of losses in transformers: No-load (core) losses and load (winding) losses. Measures taken to reduce one type of loss typically increase the other type of loss. Some examples of technology options to improve efficiency include: (1) Higher-grade electrical core steels, (2) different conductor types and materials, and (3) adjustments to core and coil configurations. A summary of the technology options from the April 2013 standards rule are presented in Table II.5 and Table II.6 of this document.

TABLE II.5—PREVIOUSLY CONSIDERED TECHNOLOGY OPTIONS AND IMPACTS OF INCREASING TRANSFORMER EFFICIENCY FOR THE APRIL 2013 STANDARDS RULE

	No-load losses	Load losses	Cost impact
To decrease no-load losses:			
Use lower-loss core materials	Lower	No change *	Higher.
Decrease flux density by:			
Increasing core cross-sectional area (CSA)	Lower	Higher	Higher.
Decreasing volts per turn	Lower	Higher	Higher.
Decrease flux path length by decreasing conductor CSA	Lower	Higher	Lower.
Use 120° symmetry in three-phase cores **	Lower	No change	TBD.

[7] A more detailed discussion can be found in section 3.8 of chapter 3, and chapter 4 of the April 2013 standards rule Technical Support Document, available from: *https://www.regulations.gov/document?D=EERE-2010-BT-STD-0048-0760.*

TABLE II.5—PREVIOUSLY CONSIDERED TECHNOLOGY OPTIONS AND IMPACTS OF INCREASING TRANSFORMER EFFICIENCY FOR THE APRIL 2013 STANDARDS RULE—Continued

	No-load losses	Load losses	Cost impact
To decrease load losses:			
Use lower-loss conductor material	No change	Lower	Higher.
Decrease current density by increasing conductor CSA	Higher	Lower	Higher.
Decrease current path length by:			
Decreasing core CSA	Higher	Lower	Lower.
Increasing volts per turn	Higher	Lower	Lower.

* Amorphous core materials would result in higher load losses because flux density drops, requiring a larger core volume.
** Sometimes referred to as a ''hexa-transformer'' design.

TABLE II.6—OTHER PREVIOUSLY CONSIDERED TECHNOLOGY OPTIONS IN THE APRIL 2013 STANDARDS RULE *

Silver as a Conductor Material
High-Temperature Superconductors
Amorphous Core Material in Stacked Core Configuration
Carbon Composite Materials for Heat Removal
High-Temperature Insulating Material
Solid-State (Power Electronics) Technology
Nanotechnology Composites

* Note: These technology options were not listed as such in the April 2013 standards rule because they were removed in the screening analysis.

Issue B.4: DOE requests comment on the technologies listed in Table II.5 and Table II.6 of this document regarding their applicability to the current market, costs, and how these technologies may improve efficiency of distribution transformers as measured according to the DOE test procedure. DOE also seeks information on how these technologies and related costs may have changed since they were considered in the April 2013 standards rule. Specifically, DOE seeks information as to whether steel grades and fabrication techniques have been updated or improved since the April 2013 standards rule.

In addition, DOE has also identified several potential new technology options that could improve efficiency of distribution transformers. These new technology options are presented in Table II.7 of this document.

TABLE II.7—POTENTIAL NEW TECHNOLOGY OPTIONS FOR DISTRIBUTION TRANSFORMERS

Core Deactivation
Symmetric Core
Less-flammable insulating liquids

Core deactivation technology uses a system of smaller transformers to replace a single, larger transformer. For example, three 25 kVA transformers operating in parallel could replace a single 75 kVA transformer. A control unit constantly monitors the unit's power output, and based on the known efficiency of each combination of transformers for any given loading, the control unit operates the optimal number of cores. In the April 2013 standards rule, DOE stated that although core deactivation technology has some potential to save energy over a real-world loading cycle, those savings might not be represented in the current DOE test procedure, and that each of the constituent transformers must comply with the applicable energy conservation standard.[8] 78 FR 23360.

Symmetric core technology describes a design strategy wherein each leg of the transformer is connected to the other two. It uses a continuously wound core with 120-degree radial symmetry, resulting in a triangularly shaped core when viewed from above. Because of zero-sequence fluxes[9] associated with wye-wye connected transformers, symmetric core designs may be best suited to delta-delta or delta-wye connections. In the April 2013 standards rule, DOE lacked the data necessary to perform a thorough engineering analysis of symmetric core designs, and therefore did not consider symmetric core technology for the rulemaking.[10] 78 FR 23360–23362.

Less-flammable insulating liquid technology is specific to liquid-immersed distribution transformers and refers to filling these transformers with an insulating fluid of higher flash point[11] than that of traditional mineral oil. This technology can benefit certain applications in which a fire would be especially costly. In the April 2013 standards rule, DOE considered whether this technology might be disproportionally affected by standards set in the liquid-immersed equipment class and concluded that was not likely to be the case. Specifically, DOE received some feedback suggesting that less-flammable insulating liquids might be capable of higher efficiencies than mineral oil units because their higher temperature tolerances may allow the unit to be downsized and operated at higher temperatures than those using mineral oils.[12] 78 FR 23355.

Issue B.5: DOE requests comment on the technologies listed in Table II.7 of this document. Specifically, DOE seeks information about technological maturity, market adoption, costs, and any related concerns (*e.g.,* impacts on consumer utility). DOE further requests comment on its definition of core deactivation technology as a system of distribution transformers. DOE also seeks comment on other technology options that it should consider for inclusion in its analysis.

Issue B.6: DOE seeks comment on whether there have been sufficient technological or market changes since the most recent standards update that may justify a new rulemaking to consider more stringent standards. Specifically, DOE seeks data and information that could enable the agency to determine whether DOE should propose a ''no new standard'' determination because a more stringent standard: 1. would not result in a significant savings of energy; 2. is not technologically feasible; 3. is not

[8] A more detailed discussion can be found on page 3–28 of chapter 3 of the April 2013 standards rule Technical Support Document, available from: *https://www.regulations.gov/document?D=EERE-2010-BT-STD-0048-0760.*

[9] ''Zero-sequence'' is a term used to describe a state in which flux among a transformer's three electrical phases is occurring simultaneously, rather than at the usual staggered intervals. In this state, damage or failure can be mitigated if both connections (*i.e.,* input and output) are of the delta arrangement.

[10] A more detailed discussion can be found on page 3–29 of chapter 3 of the April 2013 standards rule Technical Support Document, available from: *https://www.regulations.gov/document?D=EERE-2010-BT-STD-0048-0760.*

[11] The flash point is the lowest temperature at which vapors above the fluid will ignite, given an ignition source.

[12] A more detailed discussion can be found on page 3–24 of chapter 3, and page 5–22 of chapter 5 of the April 2013 standards rule Technical Support Document, available from: *https://www.regulations.gov/document?D=EERE-2010-BT-STD-0048-0760.*

economically justified; or 4. any combination of the foregoing.

3. Electrical Steel Market Assessment

a. Amorphous Steel—Producers

In its preliminary review of the amorphous steel market, DOE identified at least six companies with amorphous steel mills either already in production or at some stage of development. While DOE is aware of only one producer of amorphous ribbon in the United States; three companies in China have each recently increased their production capacity; one corporation has built a plant in South Korea and plans to enter the amorphous steel market; and an additional corporation produces at least some amorphous steel. DOE has found no indication that either of the two domestic electrical steel production companies have any plans to enter the amorphous steel market.

Issue B.7: DOE seeks comments, data, and information regarding current producers of amorphous steel and any barriers to entry by other producers or factors that could lead existing producers to exit the amorphous steel market. Comments may include, but are not limited to, identifying producers of amorphous steel not already identified in DOE's preliminary review of the amorphous steel market, and anticipated future trends in producers entering and exiting this market.

b. Amorphous Steel—Production Capacity

In its preliminary analysis of the steel market, DOE identified the quantity of amorphous steel produced by some of the companies currently in production. The global annual production capacity of amorphous ribbon of the one established producer is at least 100,000 tons of which 45,000 tons are located in the United States. Additionally, the three mills in China have recently increased their collective annual production capacity to 90,000 tons of amorphous steel and had plans, as of September 2016, to add an additional 40,000 to 50,000 tons in 2016.

Issue B.8: DOE seeks comments, data, and information quantifying and characterizing the current market capacity for amorphous steel, and potential changes in the production capacity as compared to current production capacity.

c. Amorphous Steel—Quality

In its preliminary analysis of the steel market, DOE also identified improvements in the quality of amorphous steel produced by some of the steel makers. In particular, the brittleness, stacking factor, and flux density of the amorphous steel produced in China have been improved since the April 2013 standards rule was issued. Additionally, the three companies in China can all now produce amorphous steel in the same widths as available on the U.S. market.

Issue B.9: DOE seeks comments, data, and information about historic trends in the quality of amorphous steel, the quality of the amorphous steel currently in production as it pertains to use in manufacturing energy-efficient distribution transformers. Additionally, DOE seeks comments, data, and information about any planned changes in the quality of amorphous steel and potential future trends in the quality of amorphous steel.

d. Non-Amorphous Steel—Market Conditions

In its preliminary review of the core steel market, DOE identified an increase in the use by transformer manufacturers of high permeability steels rather than M3 steel, which has resulted, in part, due to efficiency standards in the United States, the European Union, and India as well as China's efforts to improve the efficiency of its electricity grid.

Issue B.10: DOE seeks comments, data, and information about changes in the market conditions for low-voltage, dry-type distribution transformers that could inform DOE's decision to reevaluate the current energy conservation standards including any changes in the availability and quality of M4, M3, or other steels used in the manufacturing of efficient low-voltage dry-type distribution transformers.

C. Screening Analysis

The purpose of the screening analysis is to evaluate the technologies that improve equipment efficiency to determine which technologies will be eliminated from further consideration and which will be passed to the engineering analysis for further consideration.

DOE determines whether to eliminate certain technology options from further consideration based on the following criteria defined at 10 CFR part 430, subpart C, appendix A, 4(a)(4) and 5(b) as follows:

(1) *Technological feasibility.* Technologies that are not incorporated in commercial products or in working prototypes will not be considered further.

(2) Practicability to manufacture, install, and service. If it is determined that mass production of a technology in commercial products and reliable installation and servicing of the technology could not be achieved on the scale necessary to serve the relevant market at the time of the compliance date of the standard, then that technology will not be considered further.

(3) *Impacts on equipment utility or equipment availability.* If a technology is determined to have significant adverse impact on the utility of the equipment to significant subgroups of consumers, or result in the unavailability of any covered equipment type with performance characteristics (including reliability), features, sizes, capacities, and volumes that are substantially the same as equipment generally available in the United States at the time, it will not be considered further.

(4) *Adverse impacts on health or safety.* If it is determined that a technology will have significant adverse impacts on health or safety, it will not be considered further.

Technology options identified in the technology assessment are evaluated against these criteria using DOE analyses and inputs from interested parties (*e.g.,* manufacturers, trade organizations, and energy efficiency advocates). Technologies that pass through the screening analysis are referred to as ''design options'' in the engineering analysis. Technology options that fail to meet one or more of the four criteria are eliminated from consideration.

Additionally, DOE notes that the four screening criteria do not directly address the propriety status of technology options. DOE only considers potential efficiency levels achieved through the use of proprietary designs in the engineering analysis if they are not part of a unique pathway to achieve that efficiency level (*i.e.,* if there are other non-proprietary technologies capable of achieving the same efficiency level).

Table II.8 summarizes the technology options that DOE screened out in the April 2013 standards rule, and the applicable screening criteria.

TABLE II.8—PREVIOUSLY SCREENED OUT TECHNOLOGY OPTIONS FROM THE APRIL 2013 STANDARDS RULE [13]

Technology option excluded	Eliminating screening criteria
Silver as a Conductor Material	Practicability to manufacture, install, and service.
High-Temperature Superconductors	Technological feasibility; Practicability to manufacture, install, and service.
Amorphous Core Material in Stacked Core Configuration	Technological feasibility; Practicability to manufacture, install, and service.
Carbon Composite Materials for Heat Removal	Technological feasibility.
High-Temperature Insulating Material	Technological feasibility.
Solid-State (Power Electronics) Technology	Technological feasibility; Practicability to manufacture, install, and service.
Nanotechnology Composites	Technological feasibility.

Issue C.1: DOE requests feedback on how the four screening criteria would relate to the possible technology options available for distribution transformers listed in section II.A of this document, and any other technologies not identified in this document.

Issue C.2: DOE seeks information on whether the technology options listed in section II.B.2 of this document would continue to be eliminated from further consideration based on the four screening criteria.

D. Engineering Analysis

The engineering analysis estimates the cost-efficiency relationship of equipment at different levels of increased energy efficiency (''efficiency levels''). This relationship serves as the basis for the cost-benefit calculations for consumers, manufacturers, and the Nation. In determining the cost-efficiency relationship, DOE estimates the increase in manufacturer production cost (''MPC'') associated with increasing the efficiency of equipment above the baseline, up to the maximum technologically feasible (''max-tech'') efficiency level for each equipment class.

DOE historically has used the following three methodologies to generate incremental manufacturing costs and establish efficiency levels (''ELs'') for analysis: (1) The design-option approach, which provides the incremental costs of adding to a baseline model design options that will improve its efficiency; (2) the efficiency-level approach, which provides the relative costs of achieving increases in energy efficiency levels, without regard to the particular design options used to achieve such increases; and (3) the cost-assessment (or reverse engineering) approach, which provides ''bottom-up'' manufacturing cost assessments for achieving various levels of increased efficiency, based on detailed cost data for parts and material, labor, shipping/packaging, and investment for models that operate at particular efficiency levels.

1. General Methodology

In the April 2013, standards rule, DOE based its engineering analysis on a design-option approach, in which design software was used to assess the cost-efficiency relationship between various design option combinations.[14] 78 FR 23364. DOE analyzed eleven equipment classes, as discussed in section II.B.1. DOE then further classified distribution transformers by their kVA rating, within each equipment class. These kVA ratings are essentially size categories, indicating the power handling capacity of the transformers. For the rulemaking, there was a total of 100 kVA ratings across all equipment classes.

DOE recognized that it would be impractical to conduct a detailed engineering analysis on each kVA rating, and therefore developed an approach that simplified the analysis while retaining reasonable levels of accuracy. DOE found that many of the units share similar designs and construction methods and, on that basis, DOE simplified the analysis by creating engineering design lines (DLs), which group kVA ratings based on similar principles of design and construction. The DLs subdivide the equipment classes to improve the accuracy of the engineering analysis. These DLs differentiate the transformers by insulation type (liquid immersed or dry-type), number of phases (single or three), and primary insulation levels for medium-voltage dry-type distribution transformers (three different BIL levels).[15] 78 FR 23364.

After developing its DLs, DOE then selected one representative unit from each DL for study, greatly reducing the number of units for direct analysis. These representative units are listed in Table II.9 of this document.

TABLE II.9—ENGINEERING DESIGN LINES AND REPRESENTATIVE UNITS

EC *	DL	Type of distribution transformer	kVA range	Representative unit
1	1	Liquid-immersed, single-phase, rectangular tank.	10–167	50 kVA, 65 °C, single-phase, 60Hz, 14400V primary, 240/120V secondary, rectangular tank, 95kV BIL.
1	2	Liquid-immersed, single-phase, round tank.	10–167	25 kVA, 65 °C, single-phase, 60Hz, 14400V primary, 120/240V secondary, round tank, 125 kV BIL.
1	3	Liquid-immersed, single-phase	250–833	500 kVA, 65 °C, single-phase, 60Hz, 14400V primary, 277V secondary, 150kV BIL.
2	4	Liquid-immersed, three-phase	15–500	150 kVA, 65 °C, three-phase, 60Hz, 12470Y/7200V primary, 208Y/120V secondary, 95kV BIL.

[13] A more detailed discussion can be found in chapter 4 of the April 2013 standards rule Technical Support Document, available from: *https://www.regulations.gov/document?D=EERE-2010-BT-STD-0048-0760.*

[14] A more detailed discussion can be found on page 5–2 of chapter 5 of the April 2013 standards rule Technical Support Document, available from: *https://www.regulations.gov/document?D=EERE-2010-BT-STD-0048-0760.*

[15] A more detailed discussion of the structure of the engineering analysis can be found on page 5–1 of chapter 5 of the April 2013 standards rule Technical Support Document, available from: *https://www.regulations.gov/document?D=EERE-2010-BT-STD-0048-0760.*

TABLE II.9—ENGINEERING DESIGN LINES AND REPRESENTATIVE UNITS—Continued

EC *	DL	Type of distribution transformer	kVA range	Representative unit
2	5	Liquid-immersed, three-phase	750–2500	1500 kVA, 65 °C, three-phase, 60Hz, 24940GrdY/14400V primary, 480Y/277V secondary, 125 kV BIL.
3	6	Dry-type, low-voltage, single-phase.	15–333	25 kVA, 150 °C, single-phase, 60Hz, 480V primary, 120/240V secondary, 10kV BIL.
4	7	Dry-type, low-voltage, three-phase	15–150	75 kVA, 150 °C, three-phase, 60Hz, 480V primary, 208Y/120V secondary, 10kV BIL.
4	8	Dry-type, low-voltage, three-phase	225–1000	300 kVA, 150 °C, three-phase, 60Hz, 480V Delta primary, 208Y/120V secondary, 10kV BIL.
6	9	Dry-type, medium-voltage, three-phase, 20–45kV BIL.	15–500	300 kVA, 150 °C, three-phase, 60Hz, 4160V Delta primary, 480Y/277V secondary, 45kV BIL.
6	10	Dry-type, medium-voltage, three-phase, 20–45kV BIL.	750–2500	1500 kVA, 150 °C, three-phase, 60Hz, 4160V primary, 480Y/277V secondary, 45kV BIL.
8	11	Dry-type, medium-voltage, three-phase, 46–95kV BIL.	15–500	300 kVA, 150 °C, three-phase, 60Hz, 12470V primary, 480Y/277V secondary, 95kV BIL.
8	12	Dry-type, medium-voltage, three-phase, 46–95kV BIL.	750–2500	1500 kVA, 150 °C, three-phase, 60Hz, 12470V primary, 480Y/277V secondary, 95kV BIL.
10	13A	Dry-type, medium-voltage, three-phase, 96–150kV BIL.	75–833	300 kVA, 150 °C, three-phase, 60Hz, 24940V primary, 480Y/277V secondary, 125kV BIL.
10	13B	Dry-type, medium-voltage, three-phase, 96–150kV BIL.	225–2500	2000 kVA, 150 °C, three-phase, 60Hz, 24940V primary, 480Y/277V secondary, 125kV BIL.

* There is not a 1:1 correspondence of equipment classes and design lines.

Issue D.1: For each representative unit, DOE generated hundreds of unique designs by contracting with Optimized Program Services, Inc. (OPS), a software company specializing in transformer design. The OPS software used three primary inputs that it received from DOE: (1) A design option combination, which included core steel grade, primary and secondary conductor material, and core configuration; (2) a loss valuation combination; and (3) material prices. For each representative unit, DOE examined anywhere from 8 to 16 design option combinations and for each design option combination, the OPS software generated 518 designs based on unique loss valuation combinations. These loss valuation combinations are known in industry as A and B evaluation combinations, and represent a commercial consumer's present value of future losses in a transformer core and winding, respectively. For each design option combination and A and B combination, the OPS software generated an optimized transformer design based on the material prices that were also part of the inputs. Consequently, DOE obtained thousands of transformer designs for each representative unit. The performance of these designs ranged in efficiency from a baseline level, equivalent to the current distribution transformer energy conservation standards, to a theoretical max-tech efficiency level. DOE requests comment on whether a future rulemaking, if initiated, should include a greater breadth or depth of engineering design simulations.

After generating each design, DOE used the outputs of the OPS software to help create a manufacturer selling price (MSP). The material cost corresponding to the outputs of the OPS software, along with labor estimates, were marked up for scrap factors, factory overhead, shipping, and non-production costs to generate a MSP for each design. Thus, DOE obtained a cost versus efficiency relationship for each representative unit. Finally, after DOE generated the MSPs versus efficiency relationship for each representative unit, it extrapolated the results to the other, unanalyzed, kVA ratings within that same engineering design line.

Issue D.2: DOE requests comment on whether its method of performing the engineering analysis should be maintained in any future rulemaking analysis, if conducted.

Issue D.3: DOE requests comment on whether there are additional methods to establish the relationship between transformer selling price and efficiency. For example, DOE seeks comment on whether bid responses for publicly owned utilities would provide a representative design and pricing data to develop a more accurate cost-efficiency relationship and whether such data exists in sufficient volume at efficiency levels above the Federal minimum.

2. Price Inputs to Analysis

As described at the beginning of this section, the main outputs of the engineering analysis are cost-efficiency relationships that describe the estimated increases in MPC associated with higher-efficiency equipment for each analyzed equipment class. For distribution transformers, one of the inputs to the MPC is the materials costs. The primary material costs in distribution transformers come from electrical steel used for the core and the aluminum or copper conductor used for the primary and secondary winding. DOE attempted to account for the frequent fluctuation in price of these commodities by examining prices over multiple years.

For the April 2013 standards rule, DOE used its estimates of both 2010-year and 2011-year prices as reference cases for results. To construct materials price estimates, DOE spoke with manufacturers, suppliers, and industry experts to determine the prices paid for each raw material used in a distribution transformer. DOE developed an average materials price for the year based on the price a medium-to-large manufacturer would pay.[16] 78 FR 23367.

The prices of aluminum and copper conductor, in particular, correlated strongly to the price of the underlying commodities, which are tracked in various public indices (*e.g.* the LME). As a result, extrapolation of 2010- and 2011-year prices using the index prices of a future time period may yield sufficiently accurate conductor prices for that time period. Extrapolation of past conductor prices may be more accurate than direct use of the index prices, as the latter do not include

[16] A more detailed discussion can be found on page 5–40 of chapter 5 of the April 2013 standards rule Technical Support Document, available from: *https://www.regulations.gov/document?D=EERE-2010-BT-STD-0048-0760.*

transformer industry-specific costs such as drawing into wire and shipping.

Issue D.4: DOE requests comment on whether metals price indices, such as those published by the London Metal Exchange (LME) and CME Group (*e.g.,* the COMEX), may be reliably used to extrapolate 2010 and 2011 prices to the present. DOE requests comment on whether there are any other price indices that should be considered. DOE also requests comment on the impact of tariffs on the price of raw materials used manufacturing distribution transformers.

a. Liquid-Immersed Transformers

Table II.10 and Table II.11 respectively contain material price data for liquid-immersed distribution transformers relied upon in the April 2013 standards rule.[17]

TABLE II.10—TYPICAL MANUFACTURER'S MATERIAL PRICES FOR LIQUID-IMMERSED DESIGN LINES FROM THE APRIL 2013 STANDARDS RULE

Item and description	2010 price	2011 price
M6 core steel	1.33	1.04
M5 core steel	1.38	1.10
M4 core steel	1.45	1.20
M3 core steel	1.88	1.30
M3 Lite Carlite core steel	1.95	1.95
M2 core steel	2.00	1.40
M2 Lite Carlite core steel	2.10	2.10
ZDMH (mechanically-scribed core steel)	2.05	1.90
SA1 (amorphous)—finished core, volume production	2.38	2.20
Copper wire, formvar, round #10–20	4.87	4.87
Copper wire, enameled, round #7–10	4.84	4.84
Copper wire, enameled, rectangular sizes	4.97	4.97
Aluminum wire, formvar, round #9–17	3.07	3.07
Aluminum wire, formvar, round #7–10	2.57	2.57
Copper strip, thickness range 0.02–0.045	4.97	4.97
Copper strip, thickness range 0.030–0.060	4.97	4.97
Aluminum strip, thickness range 0.02–0.045	2.08	2.08
Aluminum strip, thickness range 0.045–0.080	2.08	2.08
Kraft insulating paper with diamond adhesive	1.52	1.52
Mineral oil	3.35	3.35
Tank Steel	0.38	0.38

TABLE II.11—SUMMARY TABLE OF FIXED MATERIAL COSTS FOR LIQUID-IMMERSED UNITS FROM THE APRIL 2013 STANDARDS RULE

Item and description	DL1	DL2	DL3	DL4	DL5
High voltage bushings	$28	$6	$6	$21	$60
Low voltage bushings	$30	$8	$60	$24	$160
Core clamp, nameplate, and misc. hardware	41.65	19.15	50.65	75.65	105.65
Transformer tank average cost *	~143	~73	~629	~389	~1,016

Issue D.5: DOE requests comment on the prices of materials and labor used to construct liquid-immersed distribution transformers, including all grades of electrical steel, that are presented in section II.D.2.a. Such data may include data both in absolute terms and expressed relative to the 2010 and 2011 estimates from the April 2013 standards rule.

b. Dry-Type Transformers

Table II.12 and Table II.13 respectively contain material cost data for dry-type distribution transformers relied upon in the April 2013 standards rule.[18]

TABLE II.12—MANUFACTURER'S MATERIAL PRICES FOR DRY-TYPE DESIGN LINES FROM THE APRIL 2013 STANDARDS RULE

Item and description	2010 price	2011 price
M36 core steel (26 gauge)	0.60	0.66
M19 core steel (26 gauge)	0.83	0.91
M12 core steel	0.95	0.78
M6 core steel	1.33	1.04
M5 core steel	1.38	1.10
M4 core steel	1.45	1.20
M3 core steel	1.88	1.30

[17] Materials prices for liquid-immersed distribution transformers were not presented in the final rule **Federal Register** notice, but can be found on page 5–42 of chapter 5 of the April 2013 standards rule Technical Support Document, available from: *https://www.regulations.gov/document?D=EERE-2010-BT-STD-0048-0760.*

[18] Materials prices for dry-type transformers were not presented in the final rule **Federal Register** notice, but can be found on page 5–44 of chapter 5 of the April 2013 standards rule Technical Support Document, available from: *https://www.regulations.gov/document?D=EERE-2010-BT-STD-0048-0760.*

TABLE II.12—MANUFACTURER'S MATERIAL PRICES FOR DRY-TYPE DESIGN LINES FROM THE APRIL 2013 STANDARDS RULE—Continued

Item and description	2010 price	2011 price
M2 core steel	2.00	1.40
H–0 DR core steel (laser-scribed)	2.06	1.70
SA1 (amorphous)—finished core, volume production	2.38	2.20
Copper wire, rectangular 0.1 × 0.2, Nomex wrapped	4.52	4.52
Aluminum wire, rectangular 0.1 × 0.2, Nomex wrapped	2.97	2.97
Copper strip, thickness range 0.02–0.045	4.97	4.97
Aluminum strip, thickness range 0.02–0.045	2.08	2.08
Nomex insulation (per pound)	24.50	24.50
Cequin insulation (per pound)	5.53	5.53
Impregnation (per gallon)	22.55	22.55
Winding Combs (per pound)	12.34	12.34
Enclosure Steel (per pound)	0.38	0.38

TABLE II.13—SUMMARY TABLE OF FIXED MATERIAL COSTS FOR DRY-TYPE UNITS FROM THE APRIL 2013 STANDARDS RULE

Item	DL $6	DL $7	DL $8	DL $9	DL $10	DL $11	DL $12	DL $13A	DL $13B
LV and HV terminals (set)	4	n/a	n/a	75	120	100	135	115	150
HV terminal board(s)	n/a	27	27	27	27	27	27	27	27
LV bus-bar	n/a	10.50	22.50	80	140	80	192	100	270
Core/coil mounting frame	9.25	19	36	36	120	42	125	50	175
Additional Bracing	n/a	n/a	n/a	n/a	~230	n/a	~270	n/a	~330
Nameplate	0.65	0.65	0.65	0.65	0.65	0.65	0.65	0.65	0.65
Dog-bone duct spacer (ft.)	0.24	0.32	0.42	0.42	0.52	0.42	0.56	0.42	0.60
Winding combs (lb.)	n/a	n/a	n/a	n/a	n/a	10.00	10.00	10.00	10.00
Misc. hardware	4.50	7	12	25	42	32	54	36	60
Enclosure (12, 14 gauge)	~50	~90	~100	~135	~400	~200	~450	~200	~450

Issue D.6: DOE requests comment on the prices of materials used to construct dry-type distribution transformers, including all grades of electrical steel, that are presented in section II.D.2.b. Such data may include data both in absolute terms and expressed relative to the 2010 and 2011 estimates from the April 2013 standards rule.

c. Labor Markups

Table II.14 contains labor cost data for both liquid-immersed and dry-type manufacturers relied upon in the April 2013 standards rule.[19]

TABLE II.14—LABOR MARKUPS FOR LIQUID-IMMERSED AND DRY-TYPE MANUFACTURERS

Item description	Markup percentage	Rate per hour ($)
Labor cost per hour *	.....	16.80
Indirect Production **	33	22.35
Overhead ***	30	29.05
Fringe †	24	36.03
Assembly Labor Up-time ††	43	51.52
Fully-Burdened Cost of Labor	25	64.40

* Cost per hour is from U.S. Census Bureau, 2007 Economic Census—Detailed Statistics, published October 2009. Data for NAICS code 3353111 ''Power and distribution transformers, except parts'' Production workers' hours and wages.

** Indirect production labor (*e.g.,* production managers, quality control) as a percent of direct labor on a cost basis. Navigant Consulting, Inc. (NCI) estimate.

*** Overhead includes commissions, dismissal pay, bonuses, vacation, sick leave, and social security contributions. NCI estimate.

† Fringe includes pension contributions, group insurance premiums worker's compensation. Source: U.S. Census Bureau, 2007 Economic Census—Detailed Statistics, published October 2009. Data for NAICS code 3353111 ''Power and distribution transformers, except parts'' Total fringe benefits as a percent of total compensation for all employees (not just production workers).

†† Assembly labor up-time is a factor applied to account for the time that workers are not assembling units and/or reworking unsatisfactory units. The markup of 43 percent represents a 70 percent utilization (multiplying by 100/70). NCI estimate.

Issue D.7: DOE requests comment on the prices of labor used to construct distribution transformers that are presented in section II.D.2.c. of this document. Such data may include data both in absolute terms and expressed relative to estimates from the April 2013 standards rule.

3. Load Loss Scaling

Currently, DOE energy conservation standards apply only at a single per-unit load (PUL) value for a given distribution

[19] Labor markups were not presented in the final rule **Federal Register** notice, but can be found on page 5–49 of chapter 5 of the April 2013 standards rule Technical Support Document, available from: *https://www.regulations.gov/document?D=EERE-2010-BT-STD-0048-0760.*

transformer equipment class (*e.g.,* 50% for liquid-immersed). 10 CFR 431.196. However, distribution transformers exhibit varying efficiency with varying PUL.

Distribution transformer loss is commonly separated into ''load'' and ''no-load'' components. The former is often approximated as a quadratic function of PUL, *i.e.,* load losses grow in proportion to the square of PUL. 78 FR 23372. Transformers in service may deviate from this simplified assumption for a variety of reasons (*e.g.,* temperature rise) and DOE is requesting comment on the nature and magnitude of that deviation.

Issue D.8: DOE requests comment on how load losses vary as a function of per-unit load. Specifically, DOE seeks mathematical characterizations of load losses, expressed as a function of PUL. DOE is especially interested in learning about formulas that may be more accurate than the widely used quadratic approximation, and explanations of the bases of those formulas.

E. Distribution Channels

In generating end-user price inputs for the life-cycle cost (''LCC'') analysis and national impact analysis (''NIA''), DOE must identify distribution channels (*i.e.,* how the products are distributed from the manufacturer to the consumer), and estimate relative sales volumes through each channel Markups depend on the distribution channels for the different equipment classes and consumer types, for both new construction and replacement equipment. In the April 2013 standards rule, DOE characterized these distribution channels as described in the following sections and shown in Table II.15 of this document.

1. Liquid-Immersed Distribution Transformers

DOE assumed for liquid-immersed distribution transformers sold to investor-owned utilities (IOUs) that 82 percent of sales were direct from the manufacturer to a utility consumer through a national account, and the remaining 18 percent of sales were through a transformer distributor.[20] 78 FR 23371. For liquid-immersed distribution transformers sold to publicly owned utilities, DOE assumed that all sales were through a transformer distributor.[21]

2. Dry-Type Distribution Transformers

In the April 2013 rule, DOE assumed dry-type distribution transformers were installed by an electrical contractor. An electrical contractor usually purchases the distribution transformer from a distributor, and in this case, DOE assumed it was appropriate to include a contractor markup.

TABLE II.15—DISTRIBUTION CHANNELS FOR DISTRIBUTION TRANSFORMERS

Type	Consumer	Market share (%)	Distribution channel
Liquid-immersed	Investor-owned utility	82	Manufacturer (National Account) → Consumer.
		18	Manufacturer → Distributor → Consumer.
	Publicly-owned utility	100	Manufacturer → Distributor → Consumer.
LVDT	All	100	Manufacturer → Distributor → Electrical contractor → Consumer.
MVDT	All	100	Manufacturer → Distributor → Electrical contractor → Consumer.

Issue E.1: DOE seeks input from stakeholders on whether the distribution channels described above continue to accurately describe the distribution chain for distribution transformers and are sufficient to describe the distribution market.

Issue E.2: DOE seeks input on the percentage of equipment distributed through the different distribution channels, and whether the share of equipment through each channel varies based on equipment capacity, or number of phases, or other equipment characteristics.

F. Energy Use Analysis

As part of the rulemaking process, DOE conducts an energy use analysis to identify how products are used by consumers, and thereby determine the energy savings potential of energy efficiency improvements. The energy-use analysis produces energy use estimates and end-use load shapes for distribution transformers. The energy use estimates enable evaluation of energy savings from the operation of distribution transformers at various efficiency levels, while the end-use load characterization allows evaluation of the impact on monthly and peak demand for electricity.

The energy used by distribution transformers is characterized by two types of losses. The first are no-load losses, which are also known as core losses. No-load losses are roughly constant and exist whenever the transformer is energized (*i.e.,* connected to live power lines). The second are load losses, which are also known as resistance or I^2R losses. Load losses generally vary with the square of the PUL being served by the transformer.

DOE is considering using the same methodology for its energy-use analysis as it did in the April 2013 standards rule, where it assumed the following: (1) Application of distribution transformers vary significantly by transformer type (liquid-immersed or dry-type) and ownership; (2) electric utilities own approximately 95 percent of liquid-immersed transformers; and (3) commercial/industrial (C&I) entities use mainly dry-type distribution transformers. To account for the differences in transformer application, in the April 2013 standards rule, DOE performed two separate end-use load analyses to evaluate distribution transformer efficiency, as described in the following sections.[22] 78 FR 23372.

1. Hourly Load Analysis

The hourly load analysis for liquid-immersed distribution transformers used two types of information related to electric utilities. The first was drawn from the Energy Information Administration's (EIA's) Form 861

[20] A more detailed discussion can be found on page 6–7 of chapter 6 of the April 2013 standards rule Technical Support Document, available from: *https://www.regulations.gov/document?D=EERE-2010-BT-STD-0048-0760.*

[21] Distribution channels are discussed in detail on page 6–1 of chapter 6 of the April 2013 standards rule Technical Support Document, available from: *https://www.regulations.gov/document?D=EERE-2010-BT-STD-0048-0760.*

[22] The energy-use analysis is discussed in detail in Chapter 7 and Appendix 7A of the April 2013 standards rule Technical Support Document, available from: *https://www.regulations.gov/document?D=EERE-2010-BT-STD-0048-0760.*

database.[23] Form 861 provides, through its Form 2, the annual sales in megawatt-hours for each utility to the residential, commercial, and industrial sectors. Form 861's Form 4 lists all the utilities that own electricity distribution equipment, and the county in which that equipment is located. Based on those data, DOE created a consumer sample of utilities that own transformers and assigned a sample weight to each based on the electricity sales of that utility.

The second type of utility information used is hourly system loads and prices. DOE developed regional system loads and prices for the set of regions defined in the EIA National Energy Modeling System (NEMS) Electricity Market Module (EMM).[24] The regions represent both national reliability regions and, where they exist, integrated wholesale electricity markets. Each region in turn comprises a number of electric utility control area operators (CAOs), some of which may also be utility companies. DOE obtained hourly load and system lambda data (for regions without wholesale markets) or day-ahead market price data (for market regions) from the Federal Energy Regulatory Commission (FERC) Form 714 database.[25] DOE aggregated the hourly data to produce regional time series for the EMM regions.[26]

From these data, DOE estimated the loads on individual liquid-immersed distribution transformers for both residential and non-residential utility consumers by creating hourly proxy transformer loads. These resulted in the initial (first year) RMS load for liquid-immersed transformers ranging from 34 and 40 percent for single- and three-phase equipment, respectively. Additionally, as in the April 2013 standards rule, DOE is considering projecting the energy consumption for distribution transformers into the future. This projection included a 0.5 percent per-year load growth factor to account for utility growth in the connected load on liquid-immersed distribution transformers, and no-load growth for LVDT and MVDT transformers.[27] 78 FR 23375.

Issue F.1: DOE requests comment on whether it should use the hourly load analysis for liquid-immersed distribution transformers relied upon in April 2013 standards rule and what updates to the inputs should be considered. Included in the type of information that DOE would find useful are: (i) Sources of data and recommendations to support an hourly load model; (ii) data on utility-owned distribution transformer hourly loads for the liquid-immersed equipment classes under consideration; (iii) field or simulated energy use data or other relevant information that could assist in the development or calibration for its hourly load analysis; (iv) data and information supporting or refuting the assumption that larger capacity liquid-immersed transformers are loaded to a higher degree than smaller capacity liquid-immersed transformers, and; (v) any other data commenters believe would be relevant.

Issue F.2: DOE requests comment on the appropriateness of its prior assumption of future load growth. Examples of information requested include, but are not limited to, sources of data or recommendation to support to an annual load growth assumption, and information on whether the growth of connected loads would vary with geography, transformer type, capacity, or phase-count.

a. Utilities Serving Low Population Densities

DOE recognizes that in rural areas, the number of utility customers per distribution transformer is likely to be significantly lower than in urban or suburban areas, which in turn results in lower PULs. DOE is considering using the same methodology that it used in the April 2013 standards rule, where the PUL was reduced by 10 percent for utilities serving counties with less than 32 households per square mile.[28]

Issue F.3: DOE seeks comment on the continued appropriateness of the adjustment to the PUL for areas with low population density, including information and data as to the PULs experienced by transformers in-service in low population density areas.

2. Monthly Load Analysis

The consumer sample for the monthly load analysis used for LVDT and MVDT distribution transformer owners was taken from the EIA's Commercial Buildings Energy Consumption Survey (CBECS) databases.[29] Survey data for the years 1992 and 1995 were used, as these are the only years for which monthly consumer electricity consumption (kWh) and peak demand (kW) are provided. To account for changes in the distribution of building floor space by building type and size, the weights defined in the 1992 and 1995 building samples were rescaled to reflect the distribution in the 2012 CBECS survey. CBECS covers primarily commercial buildings, but a significant fraction of transformers are shipped to industrial building owners. To account for this in the sample, data from the EIA's 2010 Manufacturing Energy Consumption Survey (MECS) [30] was used to estimate the amount of floor space of buildings that might use the type of transformer covered by the rulemaking. The statistical weights assigned to the building sample were rescaled to reflect this additional floor space.

From these data, in the April 2013 standards rule, DOE estimated that on average, the RMS PUL for LVDT transformers ranged from 20 and 25 percent for commercial and industrial consumers, respectively;[31] and that, on average, the RMS PUL for MVDT transformers ranged from 32 and 38 percent for commercial and industrial consumers, respectively.[32]

Issue F.4: DOE requests comment on the methodology for determining monthly loads for LVDT and MVDT

[23] U.S. Department of Energy-Energy Information Administration. *Form EIA–861: Annual Electric Power Industry Database. (2008).* at *http://www.eia.doe.gov/cneaf/electricity/page/eia861.html.*

[24] Energy Information Administration—Office of Integrated Analysis and Forecasting. *The National Energy Modeling System (NEMS): An Overview.* (U.S. Department of Energy, 2009). at *http://www.eia.doe.gov/oiaf/aeo/overview/.*

[25] U.S. Department of Energy-Federal Energy Regulatory Commission. Form No. 714—*Annual Electric Control and Planning Area Report.* (U.S. Department of Energy-Federal Energy Regulatory Commission, 2008). at *http://www.ferc.gov/docs-filing/forms/form-714/overview.asp.*

[26] The hourly load analysis is discussed in detail in Chapter 7 and Appendix 7A of the April 2013 standards rule Technical Support Document, available from: *https://www.regulations.gov/document?D=EERE-2010-BT-STD-0048-0760.*

[27] A more detailed discussion can be found on page 8–25 of chapter 8 of the April 2013 standards rule Technical Support Document, available from: *https://www.regulations.gov/document?D=EERE-2010-BT-STD-0048-0760.*

[28] PUL estimates for utilities serving low population densities were not presented in the final rule **Federal Register** notice, but can be found on page 8–16 of chapter 8 of the April 2013 standards rule Technical Support Document, available from: *https://www.regulations.gov/document?D=EERE-2010-BT-STD-0048-0760.*

[29] Commercial Building Energy Consumption and Expenditures Survey (CBECS); 1992 and 1995; U.S. Department of Energy—Energy Information Administration; *http://www.eia.doe.gov/emeu/cbecs/microdat.html.*

[30] Manufacturing Energy Consumption Survey (MECS); 2006 U.S. Department of Energy—Energy Information Administration; *http://www.eia.gov/emeu/mecs/contents.html.*

[31] The result of DOE's transformer load analysis for LVDT distribution transformers are contained in the Life-cycle Cost and Payback Period spreadsheet tools for DLs 6 through 8 on the Forecast Cells tab. (available at: *https://www.regulations.gov/document?D=EERE-2011-BT-STD-0051-0085*)

[32] The result of DOE's transformer load analysis for MVDT distribution transformers are contained in the Life-cycle Cost and Payback Period spreadsheet tools for DL 9 through 13B on the Forecast Cells tab. (available at: *https://www.regulations.gov/document?D=EERE-2010-BT-STD-0048-0764*)

equipment classes relied upon in the April 2013 standards rule and whether DOE should consider changes to the methodology.

Issue F.5: DOE requests comment on the appropriateness of the data sources relied upon for determining monthly loads for LVDT and MVDT equipment classes in the April 2013 standards rule and whether additional sources should be considered. Comments may include field or simulated energy use data or other relevant information that could assist in the development or calibration for its monthly load analysis.

G. Life-Cycle Cost and Payback Period Analysis

The purpose of the LCC and PBP analyses is to evaluate the economic impacts of potential energy conservation standards on individual consumers. The effect of new or amended energy conservation standards on consumers usually involves a reduction in operating cost and an increase in purchase cost.

DOE intends to analyze the potential for variability by performing the LCC and PBP calculations on a representative sample of individual consumers. DOE plans to utilize the sample of buildings developed for the energy use analysis and the corresponding simulation results.[33] DOE plans to model uncertainty in many of the inputs to the LCC and PBP analysis using Monte Carlo simulation and probability distributions. As a result, the LCC and PBP results will be displayed as distributions of impacts compared to the no-new-standards case (without amended standards) conditions.

Issue G.1: DOE requests comment on the overall methodology that it intends to use to conduct the LCC and PBP analysis for distribution transformers.

1. Base-Case Efficiency Distributions

To determine an appropriate base case against which to compare various potential standard levels, in the April 2013 standards rule DOE incorporated in the LCC calculations a purchase-decision model that specifies which of the hundreds of designs from the engineering database are likely to be selected by transformer purchasers to meet a given efficiency level. The engineering analysis yielded a cost-efficiency relationship in the form of MSPs, no-load losses, and load losses for a wide range of realistic transformer designs. This set of data provides the LCC model with a distribution of transformer design choices.

If it determines that a rulemaking is necessary, DOE plans on using the same approach as in the April 2013 standards rule that employs the selection criteria known in the transformer industry as total owning cost (TOC). The TOC method combines transformer first costs with the consumer's cost of losses to produce a present value of losses over the lifetime of a transformer. Consumers of distribution transformers, especially in the utility sector, have long used the TOC method to determine which transformers to purchase. DOE refers to those consumers who employ the TOC method to determine which transformer to purchase in the context of the LCC as ''evaluators''.

In the April 2013 standards rule, DOE assumed the following fraction of consumers to be evaluators: 10 percent for liquid-immersed transformers, and 2 percent for both LVDT and MVDT transformers. DOE assumed the fraction of evaluators to select a transformer with the best TOC for their cost of losses (this was usually of higher efficiency than the baseline), while the remaining consumers, who were not considered evaluators, selected new distribution transformers at the baseline efficiency.[34] 78 FR 23374.

Issue G.2: DOE seeks information on the fraction of consumers who employ an evaluation methodology, such as the Total Owning Cost methodology,[35] [36] that may lead to transformer purchases at a cost greater than lowest-first-costs. Further, DOE seeks information on whether this changes with the size of consumer (in terms of peak demand), or by equipment class or equipment capacity.

Issue G.3: DOE seeks information on the fraction of consumers who purchase LVDT transformers at efficiencies at, or greater than, those specified under the NEMA Premium Efficiency Transformer Program.[37]

2. Installation Costs

The primary inputs for establishing the total installed cost are the baseline consumer price, standard-level consumer price increases, and installation costs. Baseline transformer prices and standard-level transformer price increases will be determined by applying markups to MSP estimates.

a. Impact of Increased Distribution Transformer Weight on Installation Costs

Total installed costs for distribution transformers dependent heavily on the weight of the equipment. DOE plans to derive the weight-versus-capacity relationship for a typical distribution transformer from the design data produced by the engineering analysis as it did in the April 2013 standards rule. DOE estimated a scaling relationship between transformer weight, and direct installation labor and equipment costs from RSMeans for the electrical equipment categories: ''dry-type transformer'', ''oil-filled transformer'', and ''transformer, liquid-filled''.[38]

Issue G.4: DOE seeks information and data on the installation cost versus transformer weight relationship for the different types of transformers and capacities under consideration.

b. Estimation of Pole Replacement Costs

In addition to including installation costs that scale with transformer weight, DOE is considering including costs to account for the rare occasion that a more efficient pole-mounted replacement transformer may require the installation of a new, higher-grade, utility pole to support any increase in weight due to increased transformer efficiency.[39] If it determines that a rulemaking is necessary, DOE plans to use the same methodology it used in the April 2013 standards rule, where the pole-replacement cost function was applied to those modelled design lines that included pole-mounted distribution transformers.[40] 78 FR 23374.

[33] DOE plans to utilize the utility information from EIA-Form 851 and FERC No. 714, commercial, and manufacturing building types defined in CEBCS and MECS databases.

[34] The transformer selection approach is discussed in detail in chapter 8 of the April 2013 standards rule Technical Support Document, available from: *https://www.regulations.gov/document?D=EERE-2010-BT-STD-0048-0760.*

[35] IEEE, *Loss Evaluation Guide for Power Transformers and Reactors,* 1992, DOI: 10.1109/IEEESTD.1992.114388.

[36] United States Department Of Agriculture: Rural Utilities Services, *Guide for Economic Evaluation of Distribution Transformers, August 2016,* RUS Bulletin 1724D–107, See: *https://www.rd.usda.gov/files/UEP_Bulletin_1724D-107.pdf.*

[37] See: *https://www.nema.org/Technical/Pages/NEMA-Premium-Efficiency-Transformers-Program.aspx*

[38] See page 6–2 of chapter 6 of the April 2013 standards rule Technical Support Document for a more detailed discussion on transformer installation costs, available from: *https://www.regulations.gov/document?D=EERE-2010-BT-STD-0048-0760.*

[39] In the April 2013 standards rule DOE estimated an average relative increase in transformer weight when compared to baseline equipment to be between 14 percent and 4 percent for DL 2, and DL 3, respectively. In absolute terms, the average weight increase was between 48 lbs. and 120 lbs. for DL 2, and DL3, respectively. The results of DOE's pole replacement analysis for pole-mounted liquid-immersed distribution transformers are contained in the Life-cycle Cost and Payback Period spreadsheet tools for DL 2 and DL 3 on the Forecast Cells tab. (available at: *https://www.regulations.gov/document?D=EERE-2010-BT-STD-0048-0767*)

[40] See page 6–2 of chapter 6 of the April 2013 standards rule Technical Support Document for a more detailed discussion on transformer installation costs, available from: *https://*

The degree of weight increase depends on how a transformer design is modified to improve efficiency. For pole-mounted transformers (represented by design lines 2 and 3 in the April 2013 standards rule), the increased weight may lead to situations where the pole needs to be upgraded to support the additional weight of the transformer, which in turn, leads to an increase in the installation cost.

The methodology employed in the April 2013 standards rule established the threshold change in weight of the transformer between the no-new standards case and standard case level that would trigger the need to upgrade the utility pole to support the new more efficient transformer. DOE assumed that a pole change-out would only be necessary if the weight increase was greater than 15 percent of the base case and was also 150 pounds heavier than the weight of the base case unit for a25 kVA unit. To determine the weight-change threshold for larger capacity units (*i.e.,* 500kVA), the 150-pound threshold was scaled using the 0.75 scaling rule [41] to 1,418 pounds. In some cases, utilities have the option to reinforce pole or structures with guy wires instead of outright pole replacement. Because of the general practice of over-sizing of utility poles for safety reasons, and the availability of other supporting options, DOE limited the total fraction of pole replacements to 25 percent of the total population. 78 FR 23374–23375

Issue G.5: DOE seeks comment on its prior approach to accounting for the need for pole replacement, including data on the rate of pole change-out that is driven by the increased weight of more efficient distribution transformers of the same capacity.

The cost of pole replacement typically involves the removal of the old pole and its disposal, erection of the upgraded replacement pole, and the transferring of all attached equipment and concessions. DOE plans on using the labor and equipment cost estimates from the RSMeans, to construct a distribution of possible costs paid by a utility when performing a pole replacement for single pole, and multi-pole (platform) replacements.

Issue G.6: DOE seeks comment on its understanding of utility pole upgrades that result from an increase in transformer weight; the continued appropriateness of this consideration, including but not limited to information and data on the rate of pole change-out and on the cost of pole replacement by transformer capacity.

Issue G.7: DOE seeks information on any other factors that would impact transformer installations costs due to an increase in transformer efficiency.

3. Electricity Prices

DOE plans to estimate electricity prices and costs to place a value on transformer losses using the same methodologies it used in the April 2013 standards rule. One hourly methodology captured the nature of regional hourly transformer loads, their correlation with the overall utility system load, and their correlation with hourly electricity costs and prices. The monthly methodology estimated the impacts of transformer loads and resultant losses on monthly electricity usage, demand, and electricity bills. DOE plans to use the hourly analysis for liquid-immersed transformers, which are owned predominantly by utilities that pay costs that vary by the hour, and the monthly analysis for dry-type transformers, which typically are owned by commercial and industrial establishments that receive monthly electricity bills.[42] 78 FR 73375–73377.

a. Hourly Electricity Costs

To evaluate the electricity costs associated with liquid-immersed distribution transformers, DOE plans to use marginal electricity prices. Marginal prices are those utilities pay for the last kilowatt-hour of electricity produced and may be higher or lower than the average price, depending on the relationships among capacity, generation, transmission, and distribution costs. The general structure of the hourly marginal cost methodology divides the costs of electricity into capacity components and energy cost components. For each component, the economic value for both no-load losses and load losses is estimated. The capacity components include generation and transmission capacity; it also includes a reserve margin for ensuring system reliability, with factors that account for system losses. Energy cost components include a marginal cost of supply that varies by the hour.

DOE plans on using a marginal costs methodology for the set of EMM regions. To calculate the hourly price of electricity, DOE plans on using the day-ahead market clearing price for regions having wholesale electricity markets, and system lambda values for all other regions. System lambda values, which are roughly equal to the operating cost of the next unit in line for dispatch, are filed by control area operators under FERC Form 714. DOE plans on using the most recent data available for both market prices and system lambdas.

Issue G.8: DOE seeks comment on its approach for developing hourly electricity prices, as well as additional sources of relevant data.

b. Monthly Electricity Costs

To evaluate the electricity costs associated with LVDT and MVDT distribution transformers, DOE plans to derive nationally representative distributions of annual electricity prices for different consumer categories (industrial, commercial, and residential) from the most recent data available in the EIA Form 861, ''Annual Electric Power Industry Report,'' as well as data from the Edison Electric Institute.[43]

Issue G.9: DOE seeks comment on its approach for developing monthly electricity prices as well as additional sources of relevant data.

4. Future Electricity Prices

DOE plans to use projections of national average energy prices for commercial and industrial consumers to estimate future energy prices. DOE will use the most recent available edition of AEO as the default source of projections for future energy prices.

Issue G.10: DOE seeks comment on its consideration of future electricity prices as well as additional relevant sources for projecting future electricity prices.

H. Shipments

DOE develops shipments forecasts of distribution transformers to calculate the national impacts of potential amended energy conservation standards on energy consumption, net present value (''NPV''), and future manufacturer cash flows. DOE shipments projections are based on available historical data broken out by equipment class and capacity. Current sales estimates allow for a more accurate model that captures recent trends in the market.

In the April 2013 standards rule, DOE used sales estimates for the entire market for distribution transformers for years 2001 and 2009, disaggregated by transformer type (liquid-immersed or

www.regulations.gov/document?D=EERE-2010-BT-STD-0048-0760.

[41] The 0.75 Scaling Rule holds that for similarly designed transformers, costs of construction and losses scale with the ratio of their kVA ratings raised to the 0.75 power. See 78 FR 23369 for a more detailed description of the 0.75 Scaling Rule.

[42] A more detailed discussion can be found on page 8–17 of chapter 8 of the April 2013 standards rule Technical Support Document, available from: *https://www.regulations.gov/document?D=EERE-2010-BT-STD-0048-0760.*

[43] Edison Electric Institute. *Typical Bills and Average Rates Report.* Washington, DC, October 2016.

dry-type) and kVA rating.[44] [45] DOE projected these shipments to future years by assuming that annual transformer shipments growth is equal to growth in electricity consumption as given by AEO 2012, and then continuing this rate from 2030 to 2045. DOE assumed that the market share of transformers for each type, and at each capacity, to be constant throughout the analysis period. If DOE initiates an energy conservation standards rulemaking, DOE will consider using a similar approach.[46]

Issue H.1: DOE seeks comment on its approach to estimating current shipments and future sales. Such information may include, but need not be limited to: (i) Data and information on current and historical shipments and market shares of distribution transformers categories discussed in this notice; (ii) data and information on the distribution of shipments (in units) of distribution transformers discussed in this notice by rated capacity, type, BIL, and installation application (pole-mounted, surface pad-mounted, subsurface pad-mounted); and (iii) data and information on how the distribution of shipments of distribution transformers discussed in this notice has changed over time by rated capacity, type, BIL, and installation application (pole-mounted, surface pad-mounted, subsurface pad-mounted).

Issue H.2: DOE requests comment on the approach it intends on using to develop the shipments model and shipments forecasts for distribution transformers under consideration for potential standards.

1. Equipment Lifetimes

The equipment lifetime is the age at which the equipment is retired from service. DOE plans on using the same approach that it used in the April 2013 standards rule, which was based on a report by Oak Ridge National Laboratory.[47] It estimated that the average life of a distribution transformer is 32 years. This lifetime estimate includes a constant failure rate of 0.5 percent/year due to lightning and other random failures unrelated to transformer age, and an additional corrosive failure rate of 0.5 percent/year starting at year 15. 78 FR 23377

Issue H.3: DOE seeks comments on its approach for estimating equipment lifetimes.

2. Purchase Price Elasticity and Refurbished Transformers

DOE recognizes that increase in transformer prices due to changes in standards may cause changes in purchases of new transformers. Due to the essential nature of the utility provided by a distribution transformer, the option to forego purchase, or substitute with other equipment, is very limited. However, because the general trend of utility transformer purchases is determined by increases in generation, utilities could conceivably exercise some discretion in how much transformer stock to buy—the amount of ''over-capacity'' to purchase and hold as reserve stock, and may draw on these reserves instead of purchasing new equipment. In addition, some utilities may choose to refurbish failed transformers and return them to service, rather than purchase a new transformer if the price of the latter increases significantly.

In the April 2013 standards rule, DOE estimated the purchase price elasticity at −0.04 for liquid-immersed transformers, and −0.02 for all dry-type transformers. To capture the negative impact on the national energy saving estimates of replacement refurbished liquid-immersed transformers, DOE assumed that the operational need for a fraction of forgone purchases due to an increase in price would be met with less efficient refurbished equipment. DOE assumed that 20 percent of these foregone purchases would be met by refurbished transformers; and that refurbished transformers would have shorter average lifetimes at 20 years, and an efficiency of 70 percent, of baseline transformers of the same capacity and equipment class.[48] 78 FR 23379.

Issue H.4: DOE requests comment on the purchase price elasticity values of −0.04 and −0.02 for liquid-immersed and dry-type transformers, respectively.

Issue H.5: DOE requests comments on the assumptions regarding consumer response to amended standards made in the April 2013 standards rule, including but not limited to information and data on the fraction and efficiency characteristics of transformers that are refurbished and are returned to service, and whether the decision to use refurbished equipment would vary with equipment capacity, installation application, or other circumstances.

The following tables of the types of data requested for 2018 shipments in can be found in Table II.16 and Table II.17 of this document. Interested parties are also encouraged to provide additional shipment data as may be relevant.

TABLE II.16—SUMMARY TABLE OF SINGLE-PHASE DISTRIBUTION TRANSFORMERS SHIPMENTS-RELATED DATA REQUESTS

[Units Shipped, 2018]

kVA range	Liquid-immersed, medium-voltage	Dry-type, low-voltage	Dry-type, medium-voltage, 20–45 kV BIL	Dry-type, medium-voltage, 46–95 kV BIL	Dry-type, medium-voltage, ≥96 kV BIL
10					
15					
25					
37.5					

[44] Hopkinson, P. & Puri, J. *Distribution Transformer Market Shipment Estimates for 2001.* (HVOLT Consultants Inc.: Washington DC, 2003).

[45] Hopkinson, P. & Puri, J. *Distribution Transformer Market Shipment Estimates for 2009.* (HVOLT Consultants Inc.: Washington DC, 2010).

[46] The market shares for distribution transformers were not presented in the final rule **Federal Register** notice, but can be found on page 9–11 of chapter 9 of the April 2013 standards rule Technical Support Document, available from: *https://www.regulations.gov/document?D=EERE-2010-BT-STD-0048-0760.*

[47] Barnes. *Determination Analysis of Energy Conservation Standards for Distribution Transformers.* ORNL–6847. 1996.

[48] A more detailed discussion can be found on page 9–14 of chapter 9 of the April 2013 standards rule Technical Support Document, available from: *https://www.regulations.gov/document?D=EERE-2010-BT-STD-0048-0760.*

TABLE II.16—SUMMARY TABLE OF SINGLE-PHASE DISTRIBUTION TRANSFORMERS SHIPMENTS-RELATED DATA REQUESTS—Continued

[Units Shipped, 2018]

kVA range	Liquid-immersed, medium-voltage	Dry-type, low-voltage	Dry-type, medium-voltage, 20–45 kV BIL	Dry-type, medium-voltage, 46–95 kV BIL	Dry-type, medium-voltage, ≥96 kV BIL
50					
75					
100					
167					
250					
333					
500					
667					
833					

* BIL = basic impulse insulation level.

TABLE II.17—SUMMARY TABLE OF THREE-PHASE DISTRIBUTION TRANSFORMERS SHIPMENTS-RELATED DATA REQUESTS

[Units Shipped, 2018]

kVA range	Liquid-immersed, medium-voltage	Dry-type, low-voltage	Dry-type, medium-voltage, 20–45 kV BIL	Dry-type, medium-voltage, 46–95 kV BIL	Dry-type, medium-voltage, ≥96 kV BIL
15					
30					
45					
75					
112.5					
150					
225					
300					
500					
750					
1000					
1500					
2000					
2500					

* BIL = basic impulse insulation level.

If disaggregated fractions of annual sales are not available at the equipment type level, DOE requests more aggregated fractions of annual sales at the category level.

Issue H.6: If available, DOE requests the same information in Table II.16 and Table II.17 of this document for the previous five years (2013 through 2017).

I. Manufacturer Impact Analysis

The purpose of the manufacturer impact analysis (''MIA'') is to estimate the financial impact of amended energy conservation standards on manufacturers of distribution transformers, and to evaluate the potential impact of such standards on direct employment and manufacturing capacity. The MIA includes both quantitative and qualitative aspects. The quantitative part of the MIA primarily relies on the Government Regulatory Impact Model (''GRIM''), an industry cash-flow model adapted for the equipment in this analysis, with the key output of industry net present value (''INPV''). The qualitative part of the

MIA addresses the potential impacts of energy conservation standards on manufacturing capacity and industry competition, as well as factors such as equipment characteristics, impacts on particular subgroups of firms, and important market and equipment trends.

To account for manufacturers' non-production costs and profit margin, DOE applies a non-production cost multiplier (the manufacturer markup) to the MPC. The resulting MSP is the price at which manufacturers sell their distribution transformers to their first commercial consumer along the distribution chain. For the April 2013 standards rule, DOE used a manufacturer markup of 1.25 for all distribution transformer equipment classes: liquid-immersed, LVDT and MVDT.[49]

Issue I.1: DOE requests feedback on whether a manufacturer markup of 1.25 is appropriate for all distribution transformers.

As part of the MIA, DOE intends to analyze impacts of amended energy conservation standards on subgroups of manufacturers of covered equipment, including small business manufacturers. DOE uses the Small Business Administration's (''SBA'') small business size standards to determine whether manufacturers qualify as small businesses, which are listed by the applicable North American Industry Classification System (''NAICS'') code.[50] Manufacturing of consumer distribution transformers is classified under NAICS 335311, ''Power, Distribution, and Specialty Transformer Manufacturing,'' and the SBA sets a threshold of 750 employees or less for a domestic entity to be considered as a small business. This employee threshold includes all employees in a business' parent company and any other subsidiaries.

One aspect of assessing manufacturer burden involves examining the cumulative impact of multiple DOE standards and the equipment-specific regulatory actions of other Federal agencies that affect the manufacturers of a covered product or equipment. While any one regulation may not impose a significant burden on manufacturers, the combined effects of several existing or impending regulations may have serious consequences for some manufacturers, groups of manufacturers, or an entire industry. Assessing the impact of a single regulation may overlook this cumulative regulatory burden. In addition to energy conservation standards, other regulations can significantly affect manufacturers' financial operations. Multiple regulations affecting the same manufacturer can strain profits and lead companies to abandon product lines or markets with lower expected future returns than competing products. For these reasons, DOE conducts an analysis of cumulative regulatory burden as part of its rulemakings pertaining to appliance efficiency.

Issue I.2: To the extent feasible, DOE seeks the names and contact information of any domestic or foreign-based manufacturers that distribute distribution transformers in the United States.

Issue I.3: DOE requests feedback on the degree to which small businesses perform core manufacturing techniques themselves, such as assembly and mitering, versus choosing to outsource, and the corresponding effect on capital investments required to achieve greater efficiencies. DOE requests specific comment on relative changes in these practices relative to before the April 2013 standards rule.

Issue I.4: DOE identified small businesses as a subgroup of manufacturers that could be disproportionally impacted by amended energy conservation standards. DOE requests the names and contact information of small business manufacturers, as defined by the SBA's size threshold, of distribution transformers that distribute products in the United States. In addition, DOE requests comment on any other manufacturer subgroups that could be disproportionally impacted by amended energy conservation standards. DOE requests feedback on any potential approaches that could be considered to address impacts on manufacturers, including small businesses.

Issue I.5: DOE requests information regarding the cumulative regulatory burden impacts on manufacturers of distribution transformers associated with (1) other DOE standards applying to different products that these manufacturers may also make and (2) equipment-specific regulatory actions of other Federal agencies. DOE also requests comment on its methodology for computing cumulative regulatory burden and whether there are any flexibilities it can consider that would reduce this burden while remaining consistent with the requirements of EPCA.

J. Other Energy Conservation Standards Topics

1. Market Failures

In the field of economics, a market failure is a situation in which the market outcome does not maximize societal welfare. Such an outcome would result in unrealized potential welfare. DOE welcomes comment on any aspect of market failures, especially those in the context of amended energy conservation standards for distribution transformers.

2. Emerging Smart Technology Market

DOE recently published an RFI on the emerging smart technology appliance and equipment market. 83 FR 46886 (Sept. 17, 2018). In that RFI, DOE sought information to better understand market trends and issues in the emerging market for appliances and commercial equipment that incorporate smart technology. DOE's intent in issuing the RFI was to ensure that DOE did not inadvertently impede such innovation in fulfilling its statutory obligations in setting efficiency standards for covered products and equipment. DOE seeks comments, data and information on the issues presented in the RFI as they may be applicable to distribution transformers.

3. Other

In addition to the issues identified earlier in this document, DOE welcomes comment on any other aspect of energy conservation standards for distribution transformers not already addressed by the specific areas identified in this document.

III. Submission of Comments

DOE invites all interested parties to submit in writing by August 2, 2019, comments and information on matters addressed in this document and on other matters relevant to DOE's consideration of amended energy conservations standards for distribution transformers. After the close of the comment period, DOE will review the public comments received and may begin collecting data and conducting the analyses discussed in this RFI.

Submitting comments via *http://www.regulations.gov.* The *http://www.regulations.gov* web page requires you to provide your name and contact information. Your contact information will be viewable to DOE Building Technologies Office staff only. Your contact information will not be publicly viewable except for your first and last names, organization name (if any), and submitter representative name (if any). If your comment is not processed

[49] Manufacturer markups were not presented in the final rule **Federal Register** notice, but can be found on pages 12–18 through 12–23 of the April 2013 standards rule Technical Support Document, available from: *https://www.regulations.gov/document?D=EERE-2010-BT-STD-0048-0760.*

[50] Available online at *https://www.sba.gov/document/support-table-size-standards.*

properly because of technical difficulties, DOE will use this information to contact you. If DOE cannot read your comment due to technical difficulties and cannot contact you for clarification, DOE may not be able to consider your comment.

However, your contact information will be publicly viewable if you include it in the comment or in any documents attached to your comment. Any information that you do not want to be publicly viewable should not be included in your comment, nor in any document attached to your comment. Persons viewing comments will see only first and last names, organization names, correspondence containing comments, and any documents submitted with the comments.

Do not submit to *http://www.regulations.gov* information for which disclosure is restricted by statute, such as trade secrets and commercial or financial information (hereinafter referred to as Confidential Business Information (''CBI'')). Comments submitted through *http://www.regulations.gov* cannot be claimed as CBI. Comments received through the website will waive any CBI claims for the information submitted. For information on submitting CBI, see the Confidential Business Information section.

DOE processes submissions made through *http://www.regulations.gov* before posting. Normally, comments will be posted within a few days of being submitted. However, if large volumes of comments are being processed simultaneously, your comment may not be viewable for up to several weeks. Please keep the comment tracking number that *www.regulations.gov* provides after you have successfully uploaded your comment.

Submitting comments via email, hand delivery/courier, or postal mail. Comments and documents submitted via email, hand delivery/courier, or postal mail also will be posted to *http://www.regulations.gov.* If you do not want your personal contact information to be publicly viewable, do not include it in your comment or any accompanying documents. Instead, provide your contact information on a cover letter. Include your first and last names, email address, telephone number, and optional mailing address. The cover letter will not be publicly viewable as long as it does not include any comments.

Include contact information each time you submit comments, data, documents, and other information to DOE. If you submit via postal mail or hand delivery/courier, please provide all items on a CD, if feasible. It is not necessary to submit printed copies. No telefacsimiles (faxes) will be accepted.

Comments, data, and other information submitted to DOE electronically should be provided in PDF (preferred), Microsoft Word or Excel, WordPerfect, or text (ASCII) file format. Provide documents that are not secured, written in English and free of any defects or viruses. Documents should not contain special characters or any form of encryption and, if possible, they should carry the electronic signature of the author.

Campaign form letters. Please submit campaign form letters by the originating organization in batches of between 50 to 500 form letters per PDF or as one form letter with a list of supporters' names compiled into one or more PDFs. This reduces comment processing and posting time.

Confidential Business Information. According to 10 CFR 1004.11, any person submitting information that he or she believes to be confidential and exempt by law from public disclosure should submit via email, postal mail, or hand delivery/courier two well-marked copies: one copy of the document marked confidential including all the information believed to be confidential, and one copy of the document marked ''non-confidential'' with the information believed to be confidential deleted. Submit these documents via email or on a CD, if feasible. DOE will make its own determination about the confidential status of the information and treat it according to its determination.

Factors of interest to DOE when evaluating requests to treat submitted information as confidential include: (1) A description of the items, (2) whether and why such items are customarily treated as confidential within the industry, (3) whether the information is generally known by or available from other sources, (4) whether the information has previously been made available to others without obligation concerning its confidentiality, (5) an explanation of the competitive injury to the submitting person which would result from public disclosure, (6) when such information might lose its confidential character due to the passage of time, and (7) why disclosure of the information would be contrary to the public interest.

It is DOE's policy that all comments may be included in the public docket, without change and as received, including any personal information provided in the comments (except information deemed to be exempt from public disclosure).

DOE considers public participation to be a very important part of the process for developing energy conservation standards. DOE actively encourages the participation and interaction of the public during the comment period in each stage of the rulemaking process. Interactions with and between members of the public provide a balanced discussion of the issues and assist DOE in the rulemaking process. Anyone who wishes to be added to the DOE mailing list to receive future notices and information about this process or would like to request a public meeting should contact Appliance and Equipment Standards Program staff at (202) 287–1445 or via email at *ApplianceStandardsQuestions@ee.doe.gov.*

Signed in Washington, DC, on June 11, 2019.

Daniel R. Simmons,

Assistant Secretary, Energy Efficiency and Renewable Energy.

[FR Doc. 2019–12761 Filed 6–17–19; 8:45 am]

BILLING CODE 6450–01–P

ENVIRONMENTAL PROTECTION AGENCY

40 CFR Part 300

[EPA–HQ–SFUND–1983–0002; FRL–9995–25–Region 9]

National Oil and Hazardous Substances Pollution Contingency Plan; National Priorities List: Deletion of the MGM Brakes Superfund Site

AGENCY: Environmental Protection Agency (EPA).

ACTION: Proposed rule; notice of intent.

SUMMARY: The Environmental Protection Agency (EPA) Region 9 is issuing a Notice of Intent to Delete MGM Brakes Superfund Site (Site) located in Cloverdale, Sonoma County, California, from the National Priorities List (NPL) and requests public comments on this proposed action. The NPL, promulgated pursuant to section 105 of the Comprehensive Environmental Response, Compensation, and Liability Act (CERCLA) of 1980, as amended, is an appendix of the National Oil and Hazardous Substances Pollution Contingency Plan (NCP). The EPA and the State of California, through the Department of Toxic Substances Control, have determined that all appropriate response actions under CERCLA have been completed. However, this deletion does not preclude future actions under Superfund.

DATES: Comments must be received by *July 18, 2019.*

ADDRESSES: Submit your comments, identified by Docket ID no. EPA–HQ–SFUND–1983–0002, by one of the following methods:

• *http://www.regulations.gov* Follow the online instructions for submitting comments. Once submitted, comments cannot be edited or removed from *Regulations.gov*. The EPA may publish any comment received to its public docket. Do not submit electronically any information you consider to be Confidential Business Information (CBI) or other information whose disclosure is restricted by statute. Multimedia submissions (audio, video, etc.) must be accompanied by a written comment. The written comment is considered the official comment and should include discussion of all points you wish to make. The EPA will generally not consider comments or comment contents located outside of the primary submission (*i.e.* on the web, cloud, or other file sharing system). For additional submission methods, the full EPA public comment policy, information about CBI or multimedia submissions, and general guidance on making effective comments, please visit *https://www.epa.gov/dockets/commenting-epa-dockets.*

• *Email: trombadore.olivia@epa.gov.*

• *Mail:* Olivia Trombadore, Remedial Project Manager, U.S. Environmental Protection Agency, Region 9, SFD–9–2, 75 Hawthorne St., San Francisco, CA, 94105, (415) 972–3973.

• *Hand delivery:* Olivia Trombadore, Remedial Project Manager, U.S. Environmental Protection Agency, Region 9, SFD–9–2, 75 Hawthorne St., San Francisco, CA, 94105, (415) 972–3973. Such deliveries are only accepted during the Docket's normal hours of operation, and special arrangements should be made for deliveries of boxed information.

Instructions: Direct your comments to Docket ID no. EPA–HQ–SFUND–1983–0002. EPA's policy is that all comments received will be included in the public docket without change and may be made available online at *http://www.regulations.gov,* including any personal information provided, unless the comment includes information claimed to be Confidential Business Information (CBI) or other information whose disclosure is restricted by statute. Do not submit information that you consider to be CBI or otherwise protected through *http://www.regulations.gov* or email. The *http://www.regulations.gov* website is an ''anonymous access'' system, which means EPA will not know your identity or contact information unless you provide it in the body of your comment. If you send an email comment directly to EPA without going through *http://www.regulations.gov,* your email address will be automatically captured and included as part of the comment that is placed in the public docket and made available on the internet. If you submit an electronic comment, EPA recommends that you include your name and other contact information in the body of your comment and with any disk or CD–ROM you submit. If EPA cannot read your comment due to technical difficulties and cannot contact you for clarification, EPA may not be able to consider your comment. Electronic files should avoid the use of special characters, any form of encryption, and be free of any defects or viruses.

Docket: All documents in the docket are listed in the *http://www.regulations.gov* index. Although listed in the index, some information is not publicly available, *e.g.,* CBI or other information whose disclosure is restricted by statute. Certain other material, such as copyrighted material, will be publicly available only in the hard copy. Publicly available docket materials are available either electronically in *http://www.regulations.gov* or in hard copy at:

U.S. Environmental Protection Agency, Region 9, Regional Records Center, 75 Hawthorne Street, Room 3110, San Francisco, CA 94105, (415) 947–8717, Monday–Thursday: 9:00 a.m.–12:00 p.m., 1:00 p.m.–4:00 p.m.

Or:

Sonoma County Library, Headquarters, 6135 State Farm Drive, Rohnert Park, California, (707) 545–0831, Call for hours of operation.

FOR FURTHER INFORMATION CONTACT: Olivia Trombadore, Remedial Project Manager, U.S. Environmental Protection Agency, Region 9, SFD–9–2, 75 Hawthorne St., San Francisco, CA, 94105, (415) 972–3973, *trombadore.olivia@epa.gov.*

SUPPLEMENTARY INFORMATION:

Table of Contents

I. Introduction
II. NPL Deletion Criteria
III. Deletion Procedures
IV. Basis for Intended Site Deletion

I. Introduction

EPA Region 9 announces its intent to delete the MGM Brakes Superfund Site from the National Priorities List (NPL) and requests public comment on this proposed action. The NPL constitutes Appendix B of 40 CFR part 300 which is the National Oil and Hazardous Substances Pollution Contingency Plan (NCP), which EPA promulgated pursuant to section 105 of the Comprehensive Environmental Response, Compensation and Liability Act (CERCLA) of 1980, as amended. EPA maintains the NPL as the list of sites that appear to present a significant risk to public health, welfare, or the environment. Sites on the NPL may be the subject of remedial actions financed by the Hazardous Substance Superfund (Fund). As described in 40 CFR 300.425(e)(3) of the NCP, sites deleted from the NPL remain eligible for Fund-financed remedial actions if future conditions warrant such actions.

EPA will accept comments on the proposal to delete this site for thirty (30) days after publication of this document in the **Federal Register**.

Section II of this document explains the criteria for deleting sites from the NPL. Section III discusses procedures that EPA is using for this action. Section IV discusses the MGM Brakes Superfund Site and demonstrates how it meets the deletion criteria.

II. NPL Deletion Criteria

The NCP establishes the criteria that EPA uses to delete sites from the NPL. In accordance with 40 CFR 300.425(e), sites may be deleted from the NPL where no further response is appropriate. In making such a determination pursuant to 40 CFR 300.425(e), EPA will consider, in consultation with the State, whether any of the following criteria have been met:

i. Responsible parties or other persons have implemented all appropriate response actions required;

ii. all appropriate Fund-financed response under CERCLA has been implemented, and no further response action by responsible parties is appropriate; or

iii. the remedial investigation has shown that the release poses no significant threat to public health or the environment and, therefore, the taking of remedial measures is not appropriate.

III. Deletion Procedures

The following procedures apply to deletion of the Site:

(1) EPA consulted with the State before developing this Notice of Intent to Delete.

(2) EPA has provided the state 30 working days for review of this notice prior to publication of it today.

(3) In accordance with the criteria discussed above, EPA has determined that no further response is appropriate.

(4) The State of California, through the Department of Toxic Substances Control, has concurred with deletion of the Site from the NPL.

(5) Concurrently with the publication of this Notice of Intent to Delete in the **Federal Register**, a notice is being published in a major local newspaper, The Coverdale Reveille. The newspaper notice announces the 30-day public comment period concerning the Notice of Intent to Delete the site from the NPL.

(6) The EPA placed copies of documents supporting the proposed deletion in the deletion docket and made these items available for public inspection and copying at the Site information repositories identified above.

If comments are received within the 30-day public comment period on this document, EPA will evaluate and respond appropriately to the comments before making a final decision to delete. If necessary, EPA will prepare a Responsiveness Summary to address any significant public comments received. After the public comment period, if EPA determines it is still appropriate to delete the Site, the Regional Administrator will publish a final Notice of Deletion in the **Federal Register**. Public notices, public submissions and copies of the Responsiveness Summary, if prepared, will be made available to interested parties and in the site information repositories listed above.

Deletion of a site from the NPL does not itself create, alter, or revoke any individual's rights or obligations. Deletion of a site from the NPL does not in any way alter EPA's right to take enforcement actions, as appropriate. The NPL is designed primarily for informational purposes and to assist EPA management. Section 300.425(e)(3) of the NCP states that the deletion of a site from the NPL does not preclude eligibility for future response actions, should future conditions warrant such actions.

IV. Basis for Intended Site Deletion

The following information provides EPA's rationale for deleting the Site from the NPL:

Site Background and History

MGM Brakes Superfund Site (CERCLIS ID: CAD000074120) was proposed to the National Priorities List (NPL) on 12/30/1982 (47 FR 58476), and finalized on 9/08/1983 (48 FR 40658). The Site is approximately 5-acres and is located in the City of Cloverdale, Sonoma County, California at 1201 South Cloverdale Boulevard. It is bounded on the south by light industrial facilities, including a beer brewing company and on the west by a vehicle storage yard. In May 1990, a Remedial Design/Remedial Action Consent Decree (CD) was entered into by the United States Environmental Protection Agency (EPA) and the potentially responsible parties (PRPs) TBG Inc. and Indian Head Industries, Inc. The CD defines the ''Site'' as Assessor's Parcels Numbers (APN) 38, 39, and 45 and portions of adjacent Parcels 62, 63, 71, and 72. Since the CD was issued, parcels 71 and 72 were subdivided and reassigned APNs 117–040–090, 117–040–093, 117–340–001 through 117–340–012, and 117–340–COM.

From 1962 until operations ceased in 1982, the MGM Brakes facility manufactured and cast aluminum brake components for large motor vehicles. The facility consisted of a casting plant building, seven above ground storage tanks, a cooling tower, and a storage shed. From 1965 until 1972, hydraulic fluids containing polychlorinated biphenyls (PCBs) were used in the casting machines. These hydraulic fluids leaked from the casting machines in the normal course of the plant's operations and were then collected in floor drains, together with water used to cool the dies between castings. Following gravity separation of oils and grease, the wastewater containing PCBs was discharged, via a drain line, to the ground adjacent to the casting plant. The practice of discharging wastewater onto the vacant fields surrounding the casting plant building is believed to be the main cause of PCB contamination at the Site.

PCB contamination was detected in surface water runoff, surface and subsurface soil, and inside the casting plant building. During investigations conducted from 1983 to 1988 volatile organic compounds (VOCs) were detected in groundwater. The detected VOCs were benzene, chlorobenzene, cis-1,2- dichloroethylene, 1,4-dichlorobenzene, 1,1-dichloroethene, 1,1,1-trichloroethane, trichloroethene (TCE), and vinyl chloride. TCE was the predominant VOC, as it was detected more frequently than other VOCs and at the highest concentrations.

Remedial actions for PCBs began in 1993 and included equipment removal, building demolition, concrete slab removal, removal of below-grade structures, and soil excavation. The soil excavation and backfill work was completed in 1994.

Remedial actions for the VOC-contaminated groundwater included installation of groundwater monitoring wells and monitored natural attenuation. Groundwater monitoring wells were installed in 1994 and groundwater monitoring was conducted from 1995 through 2013. All groundwater monitoring wells were removed by 2017 following the attainment of groundwater restoration cleanup levels for TCE.

The MGM Brakes site is not currently developed. However, in January 2018 the EPA included the MGM Brakes site on the Superfund Redevelopment Focus List and stated the site was ''Ready for Reuse''.

Remedial Investigation and Feasibility Study (RI/FS)

EPA conducted a Remedial Investigation and Feasibility Study (RI/FS) from 1983 to 1988. The EPA conducted limited field investigations during the course of evaluating remedial alternatives. The original FS was initiated in 1985 and released in 1986. The original FS identified incineration as the EPA's preferred alternative for removing PCBs. Due to strong opposition to incineration, as well as other comments submitted during the public comment period, EPA decided to prepare a revised FS. In May 1988, EPA released the revised FS which evaluated a list of alternatives including capping, excavation and on-site fixation, in-situ fixation, on-site incineration, and excavation and off-site disposal. The preferred remedy, as stated in the May 1988 Proposed Plan, was excavation and off-site disposal of PCBs. No adverse comments were received during the public comment period regarding this remedy.

The remedial action objective (RAO) for PCB contaminated soils was to reduce the present and future on-site risk to human health and the environment to a 1×10^{-5} (1 in 100,000) cancer risk and provide unrestricted future use of the Site. RAOs also required restoration of groundwater to appropriate maximum contaminant levels (MCLs) or other health-based standard such that the total risk will not exceed 10^{-6}.

Selected Remedy

In September 1988, EPA issued a Record of Decision (ROD) which selected as the Site remedy excavation and off-site disposal of soils with PCB concentrations above 10 milligrams per kilogram (mg/kg); demolition of the casting plant; and decontamination of PCB contaminated equipment and materials. In addition, PCBs in surface soil (defined as the uppermost 10 inches) could not exceed 1 mg/kg. The 1988 ROD also called for further investigation of the VOC-contaminated groundwater and restoration of

groundwater within the Site boundaries to appropriate MCLs. The specific groundwater cleanup option was to be determined as a part of the remedial design. The 1988 ROD stated that the selected remedies were intended to reduce the present and future on-site risk to human health and the environment to a 1×10^{-5} (1 in 100,000) cancer risk and provide unrestricted future use of the property. This was to be achieved by removing and disposing of all soil exceeding a PCB concentration of 10 mg/kg. The 1988 ROD also required restoration of groundwater within the Site boundary to appropriate MCLs such that the total risk would not exceed 1×10^{-6}.

In 1995 EPA issued an Explanation of Significant Differences (ESD) that selected monitored natural attenuation (MNA) as the groundwater remedy and established Federal MCLs as the cleanup levels. The 1995 ESD also revised the soil remedy to allow bedrock (deeper than 15 feet and below ground surface (bgs)) with PCB concentrations greater than 10 mg/kg and less than 100 mg/kg to be left in place and added the requirement for land use restrictions. A Covenant and Agreement to Restrict Use of Certain Property (1995 Covenant) was recorded in Sonoma County in July 1995 to restrict use of certain portions of the Site. The 1995 Covenant prohibited excavation of more than 1 cubic yard of soil from a depth greater than 15 feet bgs without following specific protocols set forth in the 1995 Covenant.

In the 2013 Five Year Review (2013 FYR) EPA determined that the site qualified for unlimited use and unrestricted exposure. In 2016 EPA issued a second ESD that removed the requirement for land use restrictions based on the 2013 FYR determination. The 2016 ESD noted that land use controls (LUCs) were included in a new Covenant and Environmental Restrictions on Property (2016 Covenant), recorded in Sonoma County on March 25, 2016. The 2016 Covenant is not incorporated into the Superfund remedy.

Remedial Actions

The remedial actions were implemented pursuant to the ROD, CD, and ESD. For the PCB-contaminated soil remedy, EPA determined that building demolition must be performed to access the contaminated soil, concrete beneath the casting plant building, and other structures. Equipment was removed from the building and, except for one piece, was disposed of off-site with demolition debris. One piece of equipment was decontaminated, documented as clean using wipe samples, and moved to a different facility. Demolition of the structure began in April 1992 and was completed in May 1992. The building debris was sampled for PCBs, found to be hazardous waste and subsequently shipped off-site to a permitted disposal facility, Kettleman Hills Class I Landfill.

The excavation work performed to remove and dispose of PCB-contaminated soil began in June 1993. Soils contaminated above 10 mg/kg were excavated to a depth of at least five feet for most of the Site, with limited highly contaminated areas being excavated to 29 feet; as noted above, a limited volume of deeper soil contained more than 10 mg/kg and less than 100 mg/kg PCBs. There were several below-grade structures that were removed as part of this excavation work. These included a small underground storage tank, two concrete sumps, three concrete pipes, and other associated underground piping.

Upon completion of the excavation and backfilling, stockpiled soil, debris, and other appurtenances were removed from the Site and disposed of at the appropriate facilities. All excavation field work was completed by June 1994.

For the VOC-contaminated groundwater remedy, construction activities included installation of groundwater monitoring wells.

Cleanup Levels

Monitoring for PCBs in Soil and Surface Water Runoff

Soil sampling and analysis for PCBs was conducted in and around the excavation to monitor the progress and establish extent of the excavation. The entire Site was divided into grid blocks 12.5 feet on each horizontal side by two feet vertically. Each grid block was given a unique identification number. Soil samples collected from the grid blocks were analyzed in an on-site mobile laboratory that provided screening results. A California certified laboratory was used to analyze all surface soil samples and splits of at least 20% of the samples. The verification analysis indicated that PCBs were less than or equal to the remedial clean up goal. For a minimum of 10% of the soil samples sent to the off-site laboratory, an EPA split soil sample was analyzed by EPA's contract laboratory. The data from screening analyses and verification analyses for PCBs in soil met the quality assurance and quality control goals set forth in the Remedial Action Quality Assurance Project Plan.

Soil was excavated from grids where screening analyses indicated that PCB concentrations were higher than the remedial goals, except for several grids where samples were collected from bedrock in the bottom of the excavation. As noted above, the 1995 ESD revised the soil remedy to allow these few grids to remain.

In accordance with the Final Excavation Monitoring Plan, post-construction surface runoff samples were collected at three locations on and near the Site within 24 hours of any rainfall event producing 1.0 inch or more of precipitation in a 24-hour period, as measured by the Cloverdale Fire Department. Forty-seven post-construction monitoring surface runoff samples were collected after completion of the excavation work. PCBs were not detected in any of the surface water runoff samples at or above a detection limit of 0.25 μg/L.

In March 1998, the EPA provided a Certificate of Completion for the demolition and excavation work, which documented EPA's conclusion that all portions of the Remedial Action (RA) for soil were completed in accordance with the ROD, CD, and ESD.

Investigation and Monitoring of Groundwater

In accordance with the ROD and CD, the groundwater RA included activities to locate the source of VOCs, and install additional wells to evaluate the extent of VOC contamination and monitor groundwater. Despite attempts to locate the source of VOC contamination in the groundwater, no source was identified. As described above, the 1995 ESD selected MNA as the groundwater remedy and defined a point of compliance to ensure contaminants did not move beyond the Site boundary at concentrations above MCLs. When the 1995 ESD was published, TCE was the only contaminant which remained above its MCL.

Groundwater monitoring for VOCs began in 1995 and continued through 2013 as follows:

- From 1995 through 1999, groundwater samples were collected from 12 wells and analyzed for VOCs. In addition, PCBs and semi-volatile organic compounds (SVOC) analyses were performed in 1998 and 1999. With EPA concurrence, one groundwater monitoring well was abandoned. The well was abandoned under permit from the Sonoma County Department of Environmental Health (SCDEH).
- From 2000 through 2006, groundwater samples were collected from 11 wells and analyzed for VOCs. In 2006, EPA approved the abandonment of nine wells at the Site.

The wells were abandoned under permit from SCDEH.

• From 2006 through 2013 groundwater samples were collected from the two remaining wells, B–50 and B–73. The groundwater samples were analyzed for VOCs. In April 2017, after the attainment of TCE MCLs and with EPA concurrence, both wells were abandoned under permit from SCDEH.

The Final Groundwater Monitoring Report, was prepared after the 2013 sampling events. As described in the Draft Revised Final Remedy Certification Report for the VOC Groundwater Work, per 2014 EPA guidance, analysis of contaminant-specific data from the MGM Brakes Site provided a technical and scientific basis that:

1. The MCL for TCE was met in both remaining wells; and,

2. The groundwater would continue to meet the MCL for TCE in both remaining wells in the future.

In February 2018, the EPA provided a Certificate of Completion for the VOC Groundwater Work, which documented EPA's concurrence that all portions of the RA for groundwater were completed in accordance with the ROD, CD and ESD.

Operation and Maintenance

There are no ongoing monitoring activities for soil or groundwater. The 2016 ESD removed the requirement for institutional controls. There are no operation and maintenance activities required.

Five Year Review

The *Third Five-Year Review Report for MGM Brakes Superfund Site, Cloverdale California,* September 2013 (Third FYR) was the last five-year review completed at the Site. The Third FYR concluded that the Site remedy is protective of human health and the environment and that there are no issues that affect protectiveness in the short- or long-term. Furthermore, an evaluation completed during the Third FYR, and documented in the 2016 ESD, concluded that hazardous substances and pollutants had been removed to safe levels and that the site qualified for unlimited use and unrestricted exposure. Future FYRs are not required.

Community Involvement

The community has been involved in the MGM Brakes Superfund Cleanup throughout the remedial process. Comments were submitted in strong opposition to the original remedy suggested by the feasibility study in 1986. These comments were taken into consideration and EPA prepared a revised FS in May 1988 evaluating a list of alternative remedies, ultimately resulting in a different remedy for the Site. No adverse comments were received during the public comment period regarding this remedy.

Determine That the Site Meets the Criteria for Deletion in the NCP

In March 1998, the EPA provided a Certificate of Completion for the demolition and excavation work, which documented EPA's concurrence that all portions of the RA for soil were completed in accordance with the ROD, CD, and ESD. In February 2018, the EPA provided a Certificate of Completion for the VOC Groundwater Work, which documented EPA's concurrence that all portions of the RA for groundwater were completed in accordance with the ROD, CD and ESD. In the Third FYR and the 2016 ESD, EPA concluded that hazardous substances and pollutants had been removed to safe levels and that the site qualified for unlimited use and unrestricted exposure.

In February 2018, the Regional Water Quality Control Board of California determined that no further action (NFA) was required at the MGM Brakes Superfund Site located at 1201 South Cloverdale Boulevard, Cloverdale, California. A letter documenting the NFA status is included in the deletion docket. In December 2018 the Department of Toxic Substances Control issued a letter concurring with EPA's proposed deletion of the MGM Brakes Site from the National Priorities List. This letter is also included in the deletion docket.

The implemented remedy at the MGM Brakes Superfund Site has achieved the degree of cleanup specified in the ROD for all exposure pathways; and all selected remedial and removal action objectives and associated cleanup levels are consistent with agency policy and guidance. No further Superfund response is needed at the MGM Brakes Superfund Site to protect human health and the environment.

List of Subjects in 40 CFR Part 300

Environmental protection, Air pollution control, Chemicals, Hazardous waste, Hazardous substances, Intergovernmental relations, Penalties, Reporting and recordkeeping requirements, Superfund, Water pollution control, Water supply.

Authority: 33 U.S.C. 1321(d); 42 U.S.C. 9601–9657; E.O. 13626, 77 FR 56749, 3 CFR, 2013 Comp., p. 306; E.O. 12777, 56 FR 54757, 3 CFR, 1991 Comp., p. 351; E.O. 12580, 52 FR 2923, 3 CFR, 1987 Comp., p. 193.

Dated: April 30, 2019.

Michael Stoker,

Regional Administrator, Region 9.

[FR Doc. 2019–12771 Filed 6–17–19; 8:45 am]

BILLING CODE 6560–50–P

DEPARTMENT OF HEALTH AND HUMAN SERVICES

Centers for Medicare & Medicaid Services

42 CFR Parts 412, 413, and 495

[CMS–1716–CN]

RIN 0938–AT73

Medicare Program; Hospital Inpatient Prospective Payment Systems for Acute Care Hospitals and the Long-Term Care Hospital Prospective Payment System and Proposed Policy Changes and Fiscal Year 2020 Rates; Proposed Quality Reporting Requirements for Specific Providers; Medicare and Medicaid Promoting Interoperability Programs Proposed Requirements for Eligible Hospitals and Critical Access Hospitals; Correction

AGENCY: Centers for Medicare & Medicaid Services (CMS), HHS.

ACTION: Proposed rule; correction.

SUMMARY: This document corrects technical errors in the proposed rule that appeared in the May 3, 2019, issue of the **Federal Register** entitled ''Medicare Program; Hospital Inpatient Prospective Payment Systems for Acute Care Hospitals and the Long-Term Care Hospital Prospective Payment System and Proposed Policy Changes and Fiscal Year 2020 Rates; Proposed Quality Reporting Requirements for Specific Providers; Medicare and Medicaid Promoting Interoperability Programs Proposed Requirements for Eligible Hospitals and Critical Access Hospitals.''

DATES: June 18, 2019.

FOR FURTHER INFORMATION CONTACT: Erin Patton, (410) 786–2437. Dylan Podson, (410)-786–5031.

SUPPLEMENTARY INFORMATION:

I. Background

In FR Doc. 2019–08330 of May 3, 2019 (84 FR 19158), there were a number of technical errors that are identified and corrected in the Correction of Errors section of this correcting document.

II. Summary of Errors

A. Summary of Errors in the Preamble

On page 19428, in our discussion of the proposed revisions to the definition of the base operating DRG payment amount for purposes of the Hospital Readmissions Reduction Program, we made an error in describing our policy for the treatment of the difference between the hospital-specific payment rate and the Federal payment rate for purposes of calculating the base operating DRG payment amount with respect to a Medicare-dependent, small rural hospital that receives payments under § 412.108(c) or a sole community hospital that receives payments under § 412.92(d). We are correcting this language to reflect our current policy that the base operating DRG payment amount includes the difference between the hospital-specific payment rate and the Federal payment rate for a Medicare-dependent, small rural hospital and does not include the difference between the hospital-specific payment rate and the Federal payment rate for a sole community hospital. We also made an error in our citation to the applicable statutory provision. We erroneously cited to section 1886(q)(2)(b)(i) instead of section 1886(q)(2)(B)(i) of the Act.

On pages 19568, in our discussion of the Medicare and Medicaid Promoting Interoperability Programs, we made an error in a web link.

B. Summary of Errors in the Regulations Text

On page 19581, in our proposed amendments to the definition of the base operating DRG payment amount for purposes of the Hospital Readmissions Reduction Program, we made an error in describing our current policy for determining the base operating DRG payment amount by stating that with respect to a sole community hospital that receives payments under § 412.92(d) or a Medicare-dependent, small rural hospital that receives payments under § 412.108(c), this amount includes the difference between the hospital-specific payment rate and the Federal payment rate determined under subpart D of this part. We are correcting this language to reflect our current policy, which is that the base operating DRG payment amount for a sole community hospital that receives payments under § 412.92(d) *does not include* the difference between the hospital-specific payment rate and the Federal payment rate determined under subpart D of this part while the base operating DRG payment amount for a Medicare-dependent, small rural hospital that receives payments under § 412.108(c) *does include* the difference between the hospital-specific payment rate and the Federal payment rate determined under subpart D of this part.

IV. Correction of Errors

In FR Doc. 2019–08330 of May 3, 2019 (84 FR 19158), we make the following corrections:

A. Errors in the Preamble

1. On page 19428, first column, last partial paragraph, lines 10 through 13, the phrase ''amount also includes the difference between the hospital-specific payment rate and the Federal payment rate determined under the subpart.'' is corrected to read ''amount also includes the difference between the hospital-specific payment rate and the Federal payment rate determined under the subpart for a Medicare-dependent, small rural hospital that receives payments under § 412.108(c) and does not include the difference between the hospital-specific payment rate and the Federal payment rate determined under the subpart for a sole community hospital that receives payment under § 412.92(d).''

2. On page 19428, second column, first partial paragraph, lines 1 through 4, the phrase ''1886(q)(2)(b)(i) of the Act, because the regulatory text was not updated following the expiration of the FY 2013 changes.'' is corrected to read ''1886(q)(2)(B)(i) of the Act by specifying the differential treatment following the expiration of the special treatment for Medicare-dependent, small rural hospitals for FY 2013 in the statute.''

3. On page 19568, third column, last paragraph (footnote 830), lines 1 and 2, the hyperlink ''*https://www.healthit.gov/sites/default/files/onc_pghd_final_white_paper.pdf.%95*'' is corrected to read ''*https://www.healthit.gov/sites/default/files/onc_pghd_final_white_paper.pdf*''.

B. Errors in the Regulations Text

§ 412.152 [Corrected]

4. On page 19581, third column, first paragraph (definition of Base operating DRG payment amount), lines 17 through 26, ''With respect to a sole community hospital that receives payments under § 412.92(d) or a Medicare-dependent, small rural hospital that receives payments under § 412.108(c), this amount also includes the difference between the hospital-specific payment rate and the Federal payment rate determined under subpart D of this part. '' is corrected to read ''With respect to a sole community hospital that receives payments under § 412.92(d) this amount also does not include the difference between the hospital-specific payment rate and the Federal payment rate determined under subpart D of this part. With respect to a Medicare-dependent, small rural hospital that receives payments under § 412.108(c), this amount includes the difference between the hospital-specific payment rate and the Federal payment rate determined under subpart D of this part.''

Dated: June 12, 2019.

Ann C. Agnew,

Executive Secretary to the Department, Department of Health and Human Services.

[FR Doc. 2019–12906 Filed 6–17–19; 8:45 am]

BILLING CODE 4120–01–P

FEDERAL COMMUNICATIONS COMMISSION

47 CFR Part 64

[CG Docket Nos. 13–24 and 03–123; DA 19–521]

IP CTS Order Hamilton Petition for Reconsideration

AGENCY: Federal Communications Commission.

ACTION: Petition for reconsideration.

SUMMARY: The Consumer and Governmental Affairs Bureau seeks comment on a Petition for Reconsideration (Petition).

DATES: Oppositions to the Petition must be filed on or before July 3, 2019. Replies to oppositions must be filed on or before July 15, 2019.

ADDRESSES: Federal Communications Commission, 445 12th Street SW, Washington, DC 20554.

FOR FURTHER INFORMATION CONTACT: Michael Scott, Consumer and Governmental Affairs Bureau, at: (202) 418–1264; email: *Michael.Scott@fcc.gov.*

SUPPLEMENTARY INFORMATION: This is a summary of the Commission's document, DA 19–521, released June 5, 2019. The full text of the Petition is available for viewing and copying at the FCC Reference Information Center, 445 12th Street SW, Room CY–A257, Washington, DC 20554. It also may be accessed online via the Commission's Electronic Comment Filing System at: *https://ecfsapi.fcc.gov/file/1040816929886/Hamilton_Petition_for_Reconsideration_of_2019_IPCTS_URD_Order.pdf.* The Commission will not send a Congressional Review Act (CRA) submission to Congress or the Government Accountability Office pursuant to the CRA, 5 U.S.C. because no rules are being adopted by the Commission.

Subject: IP CTS Improvements and Program Management, Report and Order, FCC 19–11, published at 84 FR 8457, March 8, 2019, in CG Docket Nos. 13–24 and 03–123. This document is being published pursuant to 47 CFR 1.429(e). *See also* 47 CFR 1.4(b)(1) and 1.429(f), (g).

Number of Petitions Filed: 1.

Petition for Reconsideration has been filed in the Commission's Rulemaking proceeding by David O'Connor, on behalf of Hamilton Relay, Inc.

Federal Communications Commission.

Eliot Greenwald,

Deputy Chief, Disability Rights Office, Consumer and Governmental Affairs Bureau.

[FR Doc. 2019–12800 Filed 6–17–19; 8:45 am]

BILLING CODE 6712–01–P

Notices

Federal Register

Vol. 84, No. 117

Tuesday, June 18, 2019

This section of the FEDERAL REGISTER contains documents other than rules or proposed rules that are applicable to the public. Notices of hearings and investigations, committee meetings, agency decisions and rulings, delegations of authority, filing of petitions and applications and agency statements of organization and functions are examples of documents appearing in this section.

DEPARTMENT OF AGRICULTURE

Food and Nutrition Service

Announcement of Second and Subsequent Meetings of the 2020 Dietary Guidelines Advisory Committee and Request for Oral Comments

AGENCY: U.S. Department of Agriculture (USDA), Food, Nutrition, and Consumer Services; Department of Health and Human Services.

ACTION: Notice of open public meetings.

SUMMARY: The Departments of Agriculture and Health and Human Services announce the second and subsequent meetings of the 2020 Dietary Guidelines Advisory Committee (the Committee). These meetings will be open to the public. The period for written public comments to the Committee, which opened on March 12, 2019, will remain open throughout the Committee's deliberations. The public is invited to provide oral comments at two of the Committee's meetings.

DATES: This notice is being provided to the public on June 18, 2019. The meetings are scheduled as follows:

- *Second meeting in Washington, DC:* July 10, 2019, 9:00 a.m. to 4:30 p.m. ET, and July 11, 2019, 8:30 a.m. to 12:30 p.m. ET.
- The public may present oral comments to the Committee at the second meeting on July 11, 2019; register to present oral comments by July 1, 2019.
- *Third meeting in Washington, DC:* October 24, 2019, 9:00 a.m. to 4:30 p.m. ET, and October 25, 2019, 9:00 a.m. to 4:30 p.m. ET.
- *Fourth meeting in Houston, TX:* January 23, 2020, 9:00 a.m. to 4:30 p.m. CT, and January 24, 2020, 9:00 a.m. to 4:30 p.m. CT.
- The public may present oral comments to the Committee at the fourth meeting on January 24, 2020; register to present oral comments by January 14, 2020.
- *Fifth meeting in Washington, DC:* March 12, 2020, 9:00 a.m. to 4:30 p.m. ET, and March 13, 2020, 9:00 a.m. to 4:30 p.m. ET.

ADDRESSES: (a) Committee meetings will be accessible to the public by webcast on the internet or by attendance in person. Attendees are asked to register prior to the meeting. Registrants will receive the webcast and in-person attendance information prior to the meeting. The second, third, and fifth meetings will take place at the U.S. Department of Agriculture, South Building, Jefferson Auditorium, 1400 Independence Ave. SW, Washington, DC 20250. The fourth meeting will take place at the U.S. Department of Agriculture, Agricultural Research Service, Children's Nutrition Research Center, 1100 Bates Street, Houston, TX 77030.

(b) The public may send written comments to the Committee, identified by Docket FNS–2019–0001, using either of the following methods:

- *Federal eRulemaking Portal: http://www.regulations.gov.* Follow the instructions for sending comments. Preferred method.
- *Mail:* Kristin Koegel, USDA Food and Nutrition Service, Center for Nutrition Policy and Promotion; 3101 Park Center Drive, Room 1034; Alexandria, VA 22302.

Instructions: All submissions received must include the agency name and Docket FNS–2019–0001. For detailed instructions on sending written comments, see the **SUPPLEMENTARY INFORMATION** section of this document.

Docket: For access to Docket FNS–2019–0001 to read background documents or comments received, go to *www.regulations.gov.*

FOR FURTHER INFORMATION CONTACT: Designated Federal Officer (DFO), 2020 Dietary Guidelines Advisory Committee, Eve Stoody, Ph.D.; Center for Nutrition Policy and Promotion, Food and Nutrition Service, USDA; 3101 Park Center Drive, Room 1034; Alexandria, VA 22302; Telephone (703) 305–7600; Fax (703) 305–3300. Additional information is available on the internet at *www.DietaryGuidelines.gov.*

SUPPLEMENTARY INFORMATION:

Authority and Purpose: The 2020 Dietary Guidelines Advisory Committee shall be formed and governed under the provisions of the Federal Advisory Committee Act (FACA), Public Law 92–463, as amended (5 U.S.C., App). Under Section 301 of Public Law 101–445 (7 U.S.C. 5341, the National Nutrition Monitoring and Related Research Act of 1990, Title III), the Secretaries of USDA and HHS are directed to jointly publish the Dietary Guidelines for Americans at least every five years. See 84 FR 8840, March 12, 2019, for notice of the first meeting of the 2020 Dietary Guidelines Advisory Committee, the complete Authority and Purpose, and the Committee's Task.

Purpose of the Meetings: The Committee will meet to discuss and deliberate its review of the evidence on the topics and scientific questions identified by the Departments (see *https://www.dietaryguidelines.gov/work-under-way/review-science/topics-and-questions-under-review).* In accordance with FACA, all deliberations of the full Committee will occur in a public forum.

Meeting Agendas: Specific agendas will be announced in advance of each public meeting at *www.DietaryGuidelines.gov.* The full Committee will review the work since the last public meeting and plan for future Committee work. *At each meeting, the full Committee will deliberate on presentations made by the following subcommittees outlining the approaches and findings from their scientific reviews:* Dietary Patterns, Pregnancy and Lactation, Birth to 24 Months, Beverages and Added Sugars, Dietary Fats and Seafood, Frequency of Eating, and Food Pattern Modeling and Data Analysis. The second and fourth meetings will also provide opportunities for oral comment from the public. At the final meeting, the Committee will review its draft report.

Meeting Registration: Committee meetings will be open to the public and will be accessible by webcast or by attendance in person. Attendees are asked to register prior to the meeting. Registration will open at least two weeks in advance of each meeting. Registration to attend the second meeting in person and/or to present oral comment is now open, and closes at 5:00 p.m. on July 1, 2019. To register, go to *www.DietaryGuidelines.gov* and click on the link for ''Meeting Registration.'' To present up to three minutes of oral comment at the second

and fourth meetings, register online following the instructions to register for oral comments in the meeting registration link. Additional information on providing oral comments is provided below. To view the live webcast of any of the meetings, registration will remain open throughout each meeting. To register by phone or to request a sign language interpreter or other special accommodations, please call for registration and logistics assistance through USDA's Center for Nutrition Policy and Promotion, Susan Cole at (703) 305–7600 by 5:00 p.m. on July 1, 2019. All registrants will be asked to provide their name, affiliation, phone number or email address, days attending, and whether they will be participating via webcast or in person.

Webcast Public Participation: After registration, individuals participating by webcast will receive webcast access information through *www.DietaryGuidelines.gov.*

In-Person Public Participation and Building Access: For in-person participants, the second, third, and fifth meetings will be held in Washington, DC, and the fourth meeting will be held in Houston, TX, as noted in the Addresses section. Details regarding registration capacity and directions will be provided by email and posted on *www.DietaryGuidelines.gov.* For in-person (registered) participants, after going through USDA security at the building entrance, check-in at the meeting's on-site registration desk is required; check-in will begin at 8:00 a.m. each day in each location.

Oral Comments: The Committee invites the public to present up to three minutes of oral comment on July 11, 2019 and January 24, 2020. Due to time limitations, pre-registration is required. Registration for oral comments on July 11, 2019 is required by 5 p.m. on July 1, 2019. Registration for oral comments on January 24, 2020 will open at least three weeks prior to the meeting date and will close on January 14, 2020. Pre-registration to present oral comments will be confirmed on a first-come, first-served basis, and the number of presenters will be limited based on the time allotted on the meeting agenda. Oral comments are limited to one representative per organization. Requests to present oral comment can be made by going to *www.DietaryGuidelines.gov* and clicking on the link for ''Meeting Registration'' and must include a written outline of the intended oral comment, not exceeding one page in length. Confirmation by email will include further instructions for participation.

Written Comments and Meeting Documents: The period for written public comments to the Committee, which opened on March 12, 2019, will remain open throughout the Committee's deliberations and is not restricted to meeting dates and times.

- *Electronic submissions:* Preferred method. Follow the instructions for submitting comments at *www.regulations.gov.* Comments submitted electronically, including attachments, will be posted to Docket FNS–2019–0001.
- *Written/paper submissions:* Mail/courier to Kristin Koegel, USDA Food and Nutrition Service, Center for Nutrition Policy and Promotion; 3101 Park Center Drive, Room 1034; Alexandria, VA 22302. For written/paper submissions, CNPP will post the comment, as well as any attachments, to *www.regulations.gov.*

Meeting materials will be available for public viewing at each meeting location and after each meeting at *www.DietaryGuidelines.gov* and at the USDA Food and Nutrition Service, Center for Nutrition Policy and Promotion; 3101 Park Center Drive, Room 1034; Alexandria, VA 22302. Materials may be requested by: Telephone (703) 305–7600, Fax (703) 305–3300, *dietaryguidelines@usda.gov.*

Dated: June 11, 2019.

Brandon Lipps,

Acting Deputy Under Secretary, Food, Nutrition, and Consumer Services, U.S. Department of Agriculture.

[FR Doc. 2019–12806 Filed 6–17–19; 8:45 am]

BILLING CODE 3410–30–P

DEPARTMENT OF COMMERCE

U.S. Census Bureau

Submission for OMB Review; Comment Request

The Department of Commerce will submit to the Office of Management and Budget (OMB) for clearance the following proposal for collection of information under the provisions of the Paperwork Reduction Act.

Agency: U.S. Census Bureau.

Title: Current Population Survey, School Enrollment Supplement.

OMB Control Number: 0607–0464.

Form Number(s): There are no forms. We conduct all interviews on computers.

Type of Request: Reinstatement, without change, of a previously approved collection for which approval has expired.

Number of Respondents: 54,000.

Average Hours per Response: 0.05.

Burden Hours: 2,700.

Needs and Uses: These data provide basic information on the school enrollment status of various segments of the population necessary as background for policy formulation and implementation. This supplement is the only annual source of data on public/private elementary and secondary school enrollment, as well as the characteristics of private school students and their families. As part of the Federal Government's efforts to collect data and provide timely information to government entities for policymaking decisions, this supplement provides national trends in enrollment and progress in school. Consequently, this supplement is the only source of historical data at the national level on the age distribution and family characteristics of college students, and on the demographic characteristics of preprimary school enrollment.

Affected Public: Individuals or Households.

Frequency: Annually.

Respondent's Obligation: Voluntary.

Legal Authority: Title 13, United States Code, Sections 8(b), 141, and 182; and Title 29, United States Code, Section 2 authorize the Census Bureau to collect this information. The Education Sciences Reform Act of 2002 (ESRA, Title 20, United States Code, Section 9543) authorizes the National Center for Education Statistics to collect this information.

This information collection request may be viewed at *www.reginfo.gov.* Follow the instructions to view Department of Commerce collections currently under review by OMB.

Written comments and recommendations for the proposed information collection should be sent within 30 days of publication of this notice to *OIRA_Submission@omb.eop.gov* or fax to (202) 395–5806.

Sheleen Dumas,

Departmental Lead PRA Officer, Office of the Chief Information Officer, Commerce Department.

[FR Doc. 2019–12879 Filed 6–17–19; 8:45 am]

BILLING CODE 3510–07–P

DEPARTMENT OF COMMERCE

Foreign-Trade Zones Board

[S–107–2019]

Foreign-Trade Zone 61—San Juan, Puerto Rico; Application for Subzone; HP International Trading B.V. (Puerto Rico Branch), LLC; Aguadilla, Puerto Rico

An application has been submitted to the Foreign-Trade Zones (FTZ) Board (the Board) by the Puerto Rico Trade and Export Company, grantee of FTZ 61, requesting subzone status for the facility of HP International Trading B.V. (Puerto Rico Branch), LLC, located in Aguadilla, Puerto Rico. The application was submitted pursuant to the provisions of the Foreign-Trade Zones Act, as amended (19 U.S.C. 81a–81u), and the regulations of the Board (15 CFR part 400). It was formally docketed on June 12, 2019.

The proposed subzone (60 acres) is located at Highway 110, Km. 28, Aguadilla, Puerto Rico. No authorization for production activity has been requested at this time. The proposed subzone would be subject to the existing activation limit of FTZ 61.

In accordance with the Board's regulations, Camille Evans of the FTZ Staff is designated examiner to review the application and make recommendations to the Executive Secretary.

Public comment is invited from interested parties. Submissions shall be addressed to the Board's Executive Secretary and sent to: *ftz@trade.gov.* The closing period for their receipt is July 29, 2019. Rebuttal comments in response to material submitted during the foregoing period may be submitted during the subsequent 15-day period to August 12, 2019.

A copy of the application will be available for public inspection in the ''Reading Room'' section of the Board's website, which is accessible via *www.trade.gov/ftz.*

For further information, contact Camille Evans at *Camille.Evans@trade.gov* or (202) 482–2350.

Dated: June 13, 2019.

Andrew McGilvray,

Executive Secretary.

[FR Doc. 2019–12846 Filed 6–17–19; 8:45 am]

BILLING CODE 3510–DS–P

DEPARTMENT OF COMMERCE

Foreign-Trade Zones Board

[S–108–2019]

Foreign-Trade Zone 61—San Juan, Puerto Rico; Application for Subzone; Puerto Rico Wood Treating Industries, Inc.; Carolina, Puerto Rico

An application has been submitted to the Foreign-Trade Zones (FTZ) Board (the Board) by the Puerto Rico Trade and Export Company, grantee of FTZ 61, requesting subzone status for the facility of Puerto Rico Wood Treating Industries, Inc., located in Carolina, Puerto Rico. The application was submitted pursuant to the provisions of the Foreign-Trade Zones Act, as amended (19 U.S.C. 81a–81u), and the regulations of the Board (15 CFR part 400). It was formally docketed on June 12, 2019.

The proposed subzone (1.2 acres) is located at 65 de Infanteria Avenue, Km. 6.8, Carolina, Puerto Rico. No authorization for production activity has been requested at this time. The proposed subzone would be subject to the existing activation limit of FTZ 61.

In accordance with the Board's regulations, Camille Evans of the FTZ Staff is designated examiner to review the application and make recommendations to the Executive Secretary.

Public comment is invited from interested parties. Submissions shall be addressed to the Board's Executive Secretary and sent to: *ftz@trade.gov.* The closing period for their receipt is July 29, 2019. Rebuttal comments in response to material submitted during the foregoing period may be submitted during the subsequent 15-day period to August 12, 2019.

A copy of the application will be available for public inspection in the ''Reading Room'' section of the Board's website, which is accessible via *www.trade.gov/ftz.*

For further information, contact Camille Evans at *Camille.Evans@trade.gov* or (202) 482–2350.

Dated: June 13, 2019.

Andrew McGilvray,

Executive Secretary.

[FR Doc. 2019–12847 Filed 6–17–19; 8:45 am]

BILLING CODE 3510–DS–P

DEPARTMENT OF COMMERCE

International Trade Administration

[A–570–848]

Freshwater Crawfish Tail Meat From the People's Republic of China: Final Results of Antidumping Duty New Shipper Review; 2017–2018

AGENCY: Enforcement and Compliance, International Trade Administration, Department of Commerce.

SUMMARY: The Department of Commerce (Commerce) determines that Nanjing Yinxiangchen International Trade Co., Ltd. (Nanjing Yinxiangchen) did not make sales of subject merchandise at less than normal value for the period of review (POR) September 1, 2017 through February 28, 2018.

DATES: Applicable June 18, 2019.

FOR FURTHER INFORMATION CONTACT: Hermes Pinilla, AD/CVD Operations, Office I, Enforcement and Compliance, International Trade Administration, U.S. Department of Commerce, 1401 Constitution Avenue NW, Washington, DC 20230; telephone: (202) 482–3477.

SUPPLEMENTARY INFORMATION:

Background

On April 2, 2019, we published the preliminary results of the new shipper review of the antidumping duty order on freshwater crawfish tail meat from the People's Republic of China (China) covering the POR.[1] We gave interested parties an opportunity to comment on the *Preliminary Results.* We did not receive comments from interested parties. Hence, the final results are unchanged from the *Preliminary Results.* Commerce conducted these reviews in accordance with section 751(a)(1) and (2)(B) of the Tariff Act of 1930, as amended (the Act). The deadline for the final results of this new shipper review is June 24, 2019.[2]

Scope of the Order

The product covered by the antidumping duty order is freshwater crawfish tail meat, in all its forms (whether washed or with fat on, whether purged or un-purged), grades, and sizes; whether frozen, fresh, or

[1] *See Freshwater Crawfish Tail Meat from the People's Republic of China: Preliminary Results of Antidumping Duty New Shipper Review; 2017–2018,* 84 FR 12585 (April 2, 2019) (*Preliminary Results*), and accompanying Preliminary Decision Memorandum.

[2] For further explanation regarding how Commerce calculated this date, *see* Memorandum, ''New Shipper Review of the Antidumping Duty Order on Freshwater Crawfish Tail Meat from the People's Republic of China; 2017–2018: Preliminary Results **Federal Register** Notice,'' dated April 5, 2019.

chilled; and regardless of how it is packed, preserved, or prepared. Excluded from the scope of the order are live crawfish and other whole crawfish, whether boiled, frozen, fresh, or chilled. Also excluded are saltwater crawfish of any type, and parts thereof. Freshwater crawfish tail meat is currently classifiable in the Harmonized Tariff Schedule of the United States (HTSUS) under item numbers 1605.40.10.10 and 1605.40.10.90, which are the HTSUS numbers for prepared foodstuffs, indicating peeled crawfish tail meat and other, as introduced by U.S. Customs and Border Protection (CBP) in 2000, and HTSUS numbers 0306.19.00.10 and 0306.29.00.00, which are reserved for fish and crustaceans in general. On February 10, 2012, Commerce added HTSUS classification number 0306.29.01.00 to the scope description pursuant to a request by CBP. On September 21, 2018, Commerce added HTSUS classification numbers 0306.39.0000 and 0306.99.0000 to the scope description pursuant to a request by CBP. The HTSUS subheadings are provided for convenience and customs purposes only. The written description of the scope of the order is dispositive.

Analysis of Comments Received

As stated above, we received no comments on the *Preliminary Results.*

Changes Since the Preliminary Results

We made no revisions to the *Preliminary Results.*

Final Results of New Shipper Review

As a result of this new shipper review, Commerce determines that the following weighted-average dumping margin exists for the period September 1, 2017 through February 28, 2018:

Exporter	Producer	Weighted-average margin (percent)
Nanjing Yinxiangchen International Trade Co. Ltd	Nanjing Yinxiangchen International Trade Co. Ltd	0.00

Assessment

Pursuant to section 751(a)(2)(A) of the Act and 19 CFR 351.212(b), and the *Final Modification for Reviews,*[3] Commerce intends to instruct CBP to liquidate all appropriate entries for Nanjing Yinxiangchen without regard to antidumping duties. For entries that were not reported in the U.S. sales database submitted by Nanjing Yinxiangchen examined during this review, Commerce intends to instruct CBP to liquidate such entries at the China-wide rate. We intend to issue assessment instructions to CBP 15 days after the date of publication of the final results of this new shipper review.

Cash Deposit Requirements

On June 7, 2019, as a result of the five-year (sunset) review, Commerce revoked the antidumping duty order on imports of freshwater crawfish tail meat from the People's Republic of China.[4] In the *Revocation Notice,* Commerce stated that it intends to issue instructions to CBP to terminate the suspension of liquidation and to discontinue the collection of cash deposits on entries of subject merchandise, entered or withdrawn from warehouse, on or after May 16, 2019.[5] Furthermore, because the antidumping duty order on freshwater crawfish tail meat from China has been revoked as a result of the *Revocation Notice,* Commerce will not issue cash deposit instructions at the conclusion of this administrative review.

Notification to Importers

This notice serves as a final reminder to importers of their responsibility under 19 CFR 351.402(f)(2) to file a certificate regarding the reimbursement of antidumping duties prior to liquidation of the relevant entries during this POR. Failure to comply with this requirement could result in Commerce's presumption that reimbursement of the antidumping duties occurred and the subsequent assessment of doubled antidumping duties.

Administrative Protective Orders

This notice also serves as the only reminder to parties subject to administrative protective order (APO) of their responsibility concerning the return or destruction of proprietary information disclosed under APO in accordance with 19 CFR 351.305(a)(3). Timely written notification of the return or destruction of APO materials or conversion to judicial protective order is hereby requested. Failure to comply with the regulations and terms of an APO is a violation subject to sanction.

The final results of this new shipper review are issued and published in accordance with sections 751(a)(2)(B) and 777(i)(1) of the Act and 19 CFR 351.214.

Dated: June 12, 2019.

Jeffrey I. Kessler,

Assistant Secretary for Enforcement and Compliance.

[FR Doc. 2019–12838 Filed 6–17–19; 8:45 a.m.]

BILLING CODE 3510–DS–P

[3] *See Antidumping Proceedings: Calculation of the Weighted-Average Dumping Margin and Assessment Rate in Certain Antidumping Duty Proceedings; Final Modification,* 77 FR 8101, 8103 (February 14, 2012) (*Final Modification for Reviews*).

[4] *See Freshwater Crawfish Tail Meat from the People's Republic of China: Final Results of Sunset Review and Revocation of Antidumping Duty Order,* 84 FR 26647 (June 7, 2019) (*Revocation Notice*).

[5] *See Revocation Notice,* 84 FR at 26647.

DEPARTMENT OF COMMERCE

International Trade Administration

[A–570–028]

Hydrofluorocarbon Blends From the People's Republic of China: Initiation of Anti-Circumvention Inquiry of Antidumping Duty Order; Third-Country Blends Containing Chinese Components

AGENCY: Enforcement and Compliance, International Trade Administration, Department of Commerce.

SUMMARY: In response to allegations of circumvention from the American HFC Coalition (the petitioners), the Department of Commerce (Commerce) is initiating an anti-circumvention inquiry to determine whether certain hydrofluorocarbon (HFC) blends, containing HFC components from India and the People's Republic of China (China), that are blended in India prior to importation into the United States, are circumventing the antidumping duty (AD) order on HFC blends from China.

DATES: Applicable June 18, 2019.

FOR FURTHER INFORMATION CONTACT: Andrew Medley or Manuel Rey, AD/CVD Operations, Office II, Enforcement and Compliance, International Trade Administration, U.S. Department of Commerce, 1401 Constitution Avenue NW, Washington, DC 20230; telephone:

(202) 482–4987 and (202) 482–5518, respectively.

SUPPLEMENTARY INFORMATION:

Background

On June 12, 2017, Gujarat Fluorochemicals Ltd. (GFL) filed a scope ruling request asking Commerce to confirm that its blend of R–410A, containing a 50–50 blend of the Chinese manufactured HFC component, R–32, and the Indian-produced HFC component, R–125, blended in India, is excluded from the *Order*.[1] On July 3, 2017, the petitioners filed a submission, in opposition to GFL's request, arguing that HFC blends, containing Chinese HFC components, are included in the scope of the *Order* regardless of whether the blending occurs in India.[2] On October 13, 2017, Commerce initiated a formal scope inquiry.[3]

On August 6, 2018, the petitioners alleged that GFL was circumventing the *Order* by: (1) importing HFC component, R–32, from China into India; (2) performing a minor blending process in India with Indian-produced HFC component, R–125; and (3) exporting the HFC blend, R–410A, to the United States, as Indian origin.[4] Therefore, the petitioners requested that Commerce conduct an anti-circumvention analysis of the scope ruling request filed by GFL, pursuant to section 781(b) of the Tariff Act of 1930, as amended (the Act), and 19 CFR 351.225(h) to determine whether GFL's exports of R–410A are circumventing the *Order*.[5]

On August 27, 2018, GFL filed a letter opposing the petitioners' request that Commerce apply section 781(b) of the Act to GFL's scope ruling request.[6] In its submission, GFL argued, among other things, that its R–410A HFC blend is already excluded from the *Order* because the International Trade Commission (ITC) reached a negative determination with respect to Chinese HFC components (*i.e.,* R–32), blended in third countries.[7]

Scope of the Order

The products subject to the *Order* are HFC blends. HFC blends covered by the scope are R–404A, a zeotropic mixture consisting of 52 percent 1,1,1 Trifluoroethane, 44 percent Pentafluoroethane, and 4 percent 1,1,1,2-Tetrafluoroethane; R–407A, a zeotropic mixture of 20 percent Difluoromethane, 40 percent Pentafluoroethane, and 40 percent 1,1,1,2-Tetrafluoroethane; R–407C, a zeotropic mixture of 23 percent Difluoromethane, 25 percent Pentafluoroethane, and 52 percent 1,1,1,2-Tetrafluoroethane; R–410A, a zeotropic mixture of 50 percent Difluoromethane and 50 percent Pentafluoroethane; and R–507A, an azeotropic mixture of 50 percent Pentafluoroethane and 50 percent 1,1,1-Trifluoroethane also known as R–507. The foregoing percentages are nominal percentages by weight. Actual percentages of single component refrigerants by weight may vary by plus or minus two percent points from the nominal percentage identified above.[8]

Any blend that includes an HFC component other than R–32, R–125, R–143a, or R–134a is excluded from the scope of the *Order.*

Excluded from the *Order* are blends of refrigerant chemicals that include products other than HFCs, such as blends including chlorofluorocarbons (CFCs), hydrochlorofluorocarbons (HCFCs), hydrocarbons (HCs), or hydrofluoroolefins (HFOs).

Also excluded from the *Order* are patented HFC blends, including, but not limited to, ISCEON® blends, including MO99™ (R–438A), MO79 (R–422A), MO59 (R–417A), MO49Plus™ (R–437A) and MO29™ (R–4 22D), Genetron® Performax™ LT (R–407F), Choice® R–421A, and Choice® R–421B.

HFC blends covered by the scope of the *Order* are currently classified in the Harmonized Tariff Schedule of the United States (HTSUS) at subheadings 3824.78.0020 and 3824.78.0050. Although the HTSUS subheadings are provided for convenience and customs purposes, the written description of the scope is dispositive.[9]

Merchandise Subject to the Anti-Circumvention Inquiry

This anti-circumvention inquiry covers HFC blend R–410A, comprised of Chinese manufactured HFC components and Indian manufactured HFC components, blended in India to produce R–410A, prior to importation into the United States. This inquiry will also examine HFC blends R–404A, R–407A, R–407C, and R–507A produced in India using one or more HFC components of Chinese origin, as appropriate.

Initiation of Anti-Circumvention Proceeding

Section 781(b) of the Act and 19 CFR 351.225(h) provide that Commerce may find circumvention of an AD order when merchandise that would be subject to the AD order is completed or assembled in another foreign country before being exported to the United States. In conducting anti-circumvention inquiries under section 781(b)(1) of the Act, Commerce relies upon the following criteria: (A) Merchandise imported into the United States is of the same class or kind as merchandise produced in a foreign country that is the subject of an AD order; (B) before importation to the United States, such imported merchandise is completed or assembled in another foreign country from merchandise which is produced in the foreign country with respect to which such order applies; (C) the process of assembly or completion in the foreign country is minor or insignificant; (D) the value of the merchandise produced in the foreign country to which the AD order applies is a significant portion of the total value of the merchandise exported to the United States; and (E) Commerce determines that action is appropriate to prevent evasion of the AD order.

[1] *See* GFL's Letter, ''Hydrofluorocarbon Blends from the People's Republic of China: Request of Gujarat Fluorochemicals Ltd. for a Scope Ruling Confirming the Exclusion of Hydrofluorocarbon Blends Which are Blended in India from the AD Order,'' dated June 12, 2017 (GFL Scope Ruling Request); *see also Hydrofluorocarbon Blends from the People's Republic of China: Antidumping Duty Order,* 81 FR 55436 (August 19, 2016) (*Order*).

[2] *See* Petitioners' Letter, ''Hydrofluorocarbon Blends from the People's Republic of China: Opposition of the American HFC Coalition to the Request by Gujarat Fluorochemicals Ltd. for a Scope Ruling,'' dated July 3, 2017.

[3] *See* Memorandum, ''Hydrofluorocarbon Blends from the People's Republic of China: Initiation of Scope Inquiry on Gujarat Fluorochemicals Ltd.'s R–410A Blend,'' dated October 13, 2017.

[4] *See* Petitioners' Letter, ''Hydrofluorocarbon Blends from the People's Republic of China: Request to Apply Section 781(b) of the Act,'' dated August 6, 2018 (Initiation Request).

[5] *Id.* at 4–5.

[6] *See* GFL's Letter, ''Hydrofluorocarbon Blends from the People's Republic of China: Objection to Application of Section 781 to GFL's Scope Ruling,'' dated August 27, 2018.

[7] *See Hydrofluorocarbon Blends and Components from China, Inv. 731–TA–1279 (Final),* USITC Pub. 4629, dated August 2016 (*Final ITC Determination*).

[8] R–404A is sold under various trade names, including Forane® 404A, Genetron® 404A, Solkane® 404A, Klea® 404A, and Suva®404A. R–407A is sold under various trade names, including Forane® 407A, Solkane® 407A, Klea®407A, and Suva®407A. R–407C is sold under various trade names, including Forane® 407C, Genetron® 407C, Solkane® 407C, Klea® 407C and Suva® 407C. R–410A is sold under various trade names, including EcoFluor R410, Forane® 410A, Genetron® R410A and AZ–20, Solkane® 410A, Klea® 410A, Suva® 410A, and Puron®. R–507A is sold under various trade names, including Forane® 507, Solkane® 507, Klea®507, Genetron®AZ–50, and Suva®507. R–32 is sold under various trade names, including Solkane®32, Forane®32, and Klea®32. R–125 is sold under various trade names, including Solkane®125, Klea®125, Genetron®125, and Forane®125. R–143a is sold under various trade names, including Solkane®143a, Genetron®143a, and Forane®125.

[9] *See Order.*

A. Merchandise of the Same Class or Kind

The petitioners maintain that, pursuant to section 781(b)(1)(A) of the Act, the HFC blend R–410A sold in the United States is of the same class or kind as merchandise subject to the *Order*.[10]

B. Completion of Merchandise in Another Foreign Country

The petitioners contend that section 781(b)(1)(B)(ii) of the Act, as described above, covers the manufacture of R–410A in India, because R–32, a component of R–410A which makes up 50 percent of the blend, is manufactured in China, the country to which the *Order* applies.[11]

C. Minor or Insignificant Process

Under sections 781(b)(1)(C) and 781(b)(2) of the Act, Commerce will take into account five factors to determine whether the process of assembly or completion of merchandise in the United States is minor or insignificant. Specifically, Commerce will consider: (A) The level of investment in the foreign country; (B) the level of research and development in the foreign country; (C) the nature of the production process in the foreign country; (D) the extent of production facilities in the foreign country; and (E) whether the value of processing performed in the foreign country represents a small proportion of the value of the merchandise imported into the United States.

(1) Level of Investment in the Foreign Country

The petitioners point to a blender's testimony at an ITC staff conference that blending requires less than a $1 million investment, and state that GFL did not submit any evidence regarding its investments in India on holding tanks, pipes, valves, and other equipment used to blend R–32 and R–125.[12] Petitioners further argue that, because GFL manufactures other chemicals, it has vessels and equipment needed to store, transfer, and blend HFC components, and, therefore, it is likely that GFL's blending operations require no additional investment.[13]

(2) Level of Research and Development in the Foreign Country

The petitioners state that no research and development is required for blending operations and note that GFL did not submit any evidence regarding research and development.[14]

(3) Nature of the Production Process in the Foreign Country

The petitioners state that the production process only requires a holding tank for the finished R–410A blend, some pipes, and valves and is a very simple mixing operation with no chemical reaction and no temperature change involved.[15] Petitioners state that the blending process simply combines the components together according to the recipe, and then packages the finished blend into containers.[16] To produce R–410A to AHRI specifications, the blend must be a ''nominal'' composition of 50 percent R–32 and 50 percent R–125.[17] Further, the petitioners state that the blender may also use equipment to test the finished blend to ensure it meets the requisite specification, and additionally may use equipment to package the finished blends.[18]

(4) Extent of Production Facilities in the Foreign Country

The petitioners provide evidence showing that blending is a simple operation that requires minimal personnel and very basic production facilities.[19]

(5) Value of Processing Performed in the Foreign Country

The petitioners point to proprietary information from GFL's scope ruling request and subsequent submission showing that the blending process represents a very small cost relative to the value of the components,[20] and that Commerce found, in the original investigation, that third-country blending would not substantially transform or change the country of origin of the single components.[21]

D. Value of Merchandise Produced in the Foreign Country Is a Significant Portion of the Value of the Merchandise

The petitioners argue that HFC component R–32 is sourced from China, and R–32 constitutes nominally 50 percent of the total materials of R–410A. Additionally, the petitioners point to proprietary information from GFL's scope ruling request which the petitioners argue demonstrates that the merchandise produced in China is a significant portion of the value of the merchandise exported to the United States.[22]

E. Factors To Consider in Determining Whether Action Is Necessary

Section 781(b)(1)(E) of the Act states that Commerce will determine whether action is appropriate to prevent evasion of an AD order, and section 781(b)(3) of the Act identifies additional factors that Commerce shall consider in determining whether to include parts or components in an AD order as part of an anti-circumvention inquiry, including: (A) The pattern of trade, including sourcing patterns; (B) whether the manufacturer or exporter of the merchandise described in section 781(b)(1)(B) is affiliated with the person who uses the merchandise described in (1)(B) to assemble or complete in the foreign country the merchandise that is subsequently imported into the United States; and (C) whether imports into the foreign country of the merchandise described in (1)(B) have increased after the initiation of the investigation which resulted in the issuance of an AD order.

While there are no known affiliations between Chinese manufacturers of R–32 and GFL, the petitioners argue there has been a change in the pattern of trade to avoid AD duties, and an increase in exports of HFC components from China to India, since the imposition of the *Order* in 2016.[23] Specifically, based on numerous sources, the petitioners contend that the monthly average export volume of HFC components from China to India increased by 90.6 percent between 2015 and 2018,[24] and U.S. imports of HFC blends from India have increased from zero kilograms in 2016 to over one million kilograms in the first five months in 2018.[25] As such, the

[10] *See* Initiation Request at 5–6; *see also* GFL's Letter, ''Hydrofluorocarbon Blends from the People's Republic of China: Comments of Gujarat Fluorochemicals Ltd. on Scope Inquiry of GFL's Indian Origin R–410A,'' dated November 2, 2017.

[11] *See* Initiation Request at 6–7.

[12] *Id.* at 8 (citing the petitioners' submission ''Response to GFL's Initial Scope Comments,'' dated November 13, 2017 (Petitioners' November 13, 2017 Submission) at Exhibit 5 (ITC Staff Conference testimony)).

[13] *Id.*

[14] *Id.*

[15] *Id.* at 7 (citing Petitioners' November 13, 2017 Submission at Exhibit 2 (ITC Hearing Transcript) and Exhibit 3 (Dongyue Section D Response and TTI Section D Response)).

[16] *Id.* at 7 (citing Dongyue Section D Response and TTI Section D Response).

[17] *Id.* at 7 (citing Petitioners' November 13, 2017 Submission at Exhibit 4 (Petition)).

[18] *Id.* at 7 (citing *Final ITC Determination* at I–15).

[19] *Id.* at 7–8 (citing ITC Hearing Transcript).

[20] *Id.* at 8 (citing GFL's Scope Request at Attachment 4; GFL's Supplemental Response at Exhibit 4).

[21] *Id.* at 8–9; *see also Hydrofluorocarbon Blends and Components Thereof from the People's Republic of China: Final Determination of Sales at Less Than Fair Value and Final Affirmative Determination of Critical Circumstances,* 81 FR 42314 (June 29, 2016), and accompanying Issues and Decision Memorandum at Comment 4.

[22] *See* Initiation Request at 9–10 (citing GFL's Scope Request at Attachment 4).

[23] *Id.* at 12–14.

[24] *Id.* at 12 and Exhibit 2 (Global Trade Atlas statistics).

[25] *Id.* at 13 and Exhibit 3 (Census statistics).

petitioners argue that the only reason to export R–32 to India to be blended, and to not complete the blending in the country of origin, is to evade application of AD duties upon importation.

Conclusion

Based on the information provided by the petitioners, we determine that there is sufficient information to warrant an initiation of an anti-circumvention inquiry, pursuant to section 781(b) of the Act and 19 CFR 351.225(h). Commerce will determine whether the merchandise subject to the inquiry (as described in the ''Merchandise Subject to the Anti-Circumvention Inquiry'' section above) is circumventing the *Order* such that it should be included with the scope of the *Order.* Additionally, as part of this anti-circumvention inquiry, we will address the scope inquiry filed by GFL under 19 CFR 351.225(c),[26] and our final findings in this anti-circumvention inquiry will include a final finding with regard to GFL's scope inquiry.

In accordance with 19 CFR 351.225(l)(2), if Commerce issues a preliminary affirmative determination, we will then instruct U.S. Customs and Border Protection to suspend liquidation and require a cash deposit of estimated duties, at the applicable rate, for each unliquidated entry of the merchandise at issue, entered or withdrawn from warehouse for consumption on or after the date of initiation of the inquiry.

Following consultation with interested parties, Commerce will establish a schedule for questionnaires and comments on the issues related to the inquiry. Before issuance of any affirmative determination, Commerce intends to notify the ITC of any proposed inclusion of the inquiry merchandise under the *Order* in accordance with section 781(e)(1)(B) of the Act. Pursuant to section 781(f) of the Act, Commerce intends to issue its final determination within 300 days of the date of publication of this initiation.

Notification to Interested Parties

This notice is published in accordance with sections 781(b) of the Act and 19 CFR 351.225(h).

Dated: June 12, 2019.

Jeffrey I. Kessler,

Assistant Secretary for Enforcement and Compliance.

[FR Doc. 2019–12841 Filed 6–17–19; 8:45 am]

BILLING CODE 3510–DS–P

[26] *See* GFL Scope Ruling Request.

DEPARTMENT OF COMMERCE

International Trade Administration

[A–433–813]

Strontium Chromate From Austria: Amended Preliminary Determination of Sales at Less Than Fair Value

AGENCY: Enforcement and Compliance, International Trade Administration, Department of Commerce.

SUMMARY: The Department of Commerce (Commerce) is amending the preliminary determination of the less than fair value (LTFV) investigation of strontium chromate from Austria to correct a significant ministerial error.

DATES: Applicable June 18, 2019.

FOR FURTHER INFORMATION CONTACT: Brian Smith or Jaron Moore, AD/CVD Operations, Office VIII, Enforcement and Compliance, International Trade Administration, U.S. Department of Commerce, 1401 Constitution Avenue NW, Washington, DC 20230; telephone: (202) 482–1766 or (202) 482–3640, respectively.

SUPPLEMENTARY INFORMATION:

Background

On May 17, 2019, Commerce published in the **Federal Register** the *Preliminary Determination,*[1] and completed the disclosure of all calculation materials to interested parties. On May 20, 2019, Lumimove Inc. d.b.a. WPC Technologies (the petitioner) timely filed a ministerial error allegation regarding the *Preliminary Determination.*[2]

Period of Investigation

The period of investigation is July 1, 2017 through June 30, 2018.

Scope of Investigation

The product covered by this investigation is strontium chromate from Austria. For a complete description of the scope of this investigation, *see* the Appendix to this notice.

Analysis of the Significant Ministerial Error Allegation

Commerce will analyze any comments received and, if appropriate, correct any significant ministerial error by amending the preliminary determination according to 19 CFR 351.351.224(e). A ministerial error is defined in 19 CFR 351.224(f) as ''an error in addition, subtraction, or other arithmetic function, clerical error resulting from inaccurate copying, duplication, or the like, and any other similar type of unintentional error which the Secretary considers ministerial.''[3] A significant ministerial error is defined as a ministerial error, the correction of which, singly or in combination with other errors, would result in: (1) a change of at least five absolute percentage points in, but not less than 25 percent of, the weighted-average dumping margin calculated in the original (erroneous) preliminary determination; or (2) a difference between a weighted-average dumping margin of zero or *de minimis* and a weighted-average dumping margin of greater than *de minimis* or vice versa.[4]

Amended Preliminary Determination

Pursuant to 19 CFR 351.224(e) and (g)(1), Commerce is amending the *Preliminary Determination* to reflect the correction of one ministerial error made in the calculation of the estimated weighted-average dumping margin for Habich GmbH (Habich).[5] This error is a significant ministerial error within the meaning of 19 CFR 351.224(g) because Habich's margin increases from 1.24 percent to 2.50 percent as a result of correcting this ministerial error, exceeding the specified threshold, *i.e.,* representing a difference between a *de minimis* margin and a margin above *de minimis.*[6]

All-Others Rate

Because the amended preliminary margin is above *de minimis,* we determined an estimated all-others rate for all exporters and producers not individually examined. This rate shall be an amount equal to the weighted average of the estimated weighted-average dumping margins established for exporters and producers individually investigated, excluding any zero and *de minimis* margins, and any margins determined entirely under section 776 of the Act. We calculated an individual estimated weighted-average dumping margin for Habich, the only individually examined exporter/producer in this investigation. Because

[1] *See Strontium Chromate from Austria: Preliminary Determination of Sales at Not Less Than Fair Value and Postponement of Final Determination,* 84 FR 22443 (May 17, 2019) (*Preliminary Determination*).

[2] *See* Petitioner's Letter, ''Strontium Chromate from Austria: Ministerial Error Comments,'' dated May 20, 2019 (Petitioner's Ministerial Error Allegation).

[3] *See* also section 735(e) of the Tariff Act of 1930, as amended (the Act).

[4] *See* 19 CFR 351.224(g).

[5] *See* Memorandum, ''Less-Than-Fair-Value Investigation of Strontium Chromate from Austria: Ministerial Error Allegation in the Preliminary Determination,'' dated concurrently with this notice (Ministerial Error Memorandum).

[6] *Id.*

the only individually calculated dumping margin is not zero, *de minimis,* or based entirely on facts otherwise available, the estimated weighted-average dumping margin calculated for Habich is the margin assigned to all other producers and exporters, pursuant to section 735(c)(5)(A) of the Act.

Amended Preliminary Determination

Commerce preliminarily determines that the following amended weighted-average dumping margins exist for the period July 1, 2017 through June 30, 2018:

Exporter/producer	Estimated weighted-average dumping margin (percent)
Habich GmbH	2.50
All Others	2.50

Amended Cash Deposits and Suspension of Liquidation

The collection of cash deposits and suspension of liquidation will be revised according to the rates calculated in this amended preliminary determination, in accordance with sections 733(d) and (f) of the Act, and 19 CFR 351.224. Because the rates are increasing from the *Preliminary Determination,* the amended cash deposit rates will be effective on the date of publication of this notice in the **Federal Register**. Parties will be notified of this determination, in accordance with sections 733(d) and (f) of the Act.

Disclosure

We intend to disclose the calculations performed to parties in this proceeding within five days after public announcement of the amended preliminary determination, in accordance with 19 CFR 351.224.

Postponement of Final Determination and Extension of Provisional Measures

Section 735(a)(2) of the Act provides that a final determination may be postponed until not later than 135 days after the date of the publication of the preliminary determination if, in the event of an affirmative preliminary determination, a request for such postponement is made by exporters who account for a significant proportion of exports of the subject merchandise, or in the event of a negative preliminary determination, a request for such postponement is made by the petitioner. Section 351.210(e)(2) of Commerce's regulations requires that a request by exporters for postponement of the final determination be accompanied by a request for extension of provisional measures from a four-month period to a period not more than six months in duration.

On April 12, 2019, pursuant to 19 CFR 351.210(e), Habich requested that Commerce postpone the final determination and that provisional measures be extended to a period not to exceed six months.[7] In accordance with section 735(a)(2)(A) of the Act and 19 CFR 351.210(b)(2)(ii), because (1) the preliminary determination, as amended, is affirmative; (2) the requesting exporter accounts for a significant proportion of exports of the subject merchandise; and (3) no compelling reasons for denial exist, Commerce is postponing the final determination and extending the provisional measures from a four-month period to a period not greater than six months. Accordingly, Commerce will make its final determination no later than 135 days after the date of publication of the *Preliminary Determination.*[8]

International Trade Commission Notification

In accordance with section 733(f) of the Act, we will notify the International Trade Commission of our amended preliminary determination.

Notification to Interested Parties

This amended preliminary determination is issued and published in accordance with sections 733(f) and 777(i)(1) of the Act and 19 CFR 351.224(e).

Dated: June 12, 2019.

Jeffrey I. Kessler,

Assistant Secretary for Enforcement and Compliance.

Appendix

Scope of the Investigation

The merchandise covered by these investigations is strontium chromate, regardless of form (including but not limited to, powder (sometimes known as granular), dispersions (sometimes known as paste), or in any solution). The chemical formula for strontium chromate is SrCrO4 and the Chemical Abstracts Service (CAS) registry number is 7789–06–2.

Strontium chromate that has been blended with another product or products is included in the scope if the resulting mix contains 15 percent or more of strontium chromate by total formula weight. Products with which strontium chromate may be blended include, but are not limited to, water and solvents such as Aromatic 100 Methyl Amyl Ketone (MAK)/2-Heptanone, Acetone, Glycol Ether EB, Naphtha Leicht, and Xylene. Subject merchandise includes strontium chromate that has been processed in a third country into a product that otherwise would be within the scope of these investigations if processed in the country of manufacture of the in-scope strontium chromate.

The merchandise subject to these investigations is currently classified in the Harmonized Tariff Schedule of the United States (HTSUS) under subheading 2841.50.9100. Subject merchandise may also enter under HTSUS subheading 3212.90.0050. While the HTSUS subheadings and CAS registry number are provided for convenience and customs purposes, the written description of the scope is dispositive.

[FR Doc. 2019–12840 Filed 6–17–19; 8:45 am]

BILLING CODE 3510–DS–P

[7] *See* Habich's letter, ''*Strontium Chromate from Austria;* Habich GmbH's Request to Extend the Final Determination,'' dated April 12, 2019.

[8] *See Preliminary Determination.*

DEPARTMENT OF COMMERCE

International Trade Administration

[A–570–028]

Hydrofluorocarbon Blends From the People's Republic of China: Initiation of Anti-Circumvention Inquiry of Antidumping Duty Order; Components

AGENCY: Enforcement and Compliance, International Trade Administration, Department of Commerce.

SUMMARY: In response to allegations of circumvention from the American HFC Coalition (the petitioners), the Department of Commerce (Commerce) is initiating an anti-circumvention inquiry to determine whether imports of hydrofluorocarbon (HFC) components R–32, R–125, and R–143a from the People's Republic of China (China) that are further processed into HFC blends in the United States are circumventing the antidumping duty (AD) order on HFC blends from China.

DATES: Applicable June 18, 2019.

FOR FURTHER INFORMATION CONTACT: Andrew Medley or Manuel Rey, AD/CVD Operations, Office II, Enforcement and Compliance, International Trade Administration, U.S. Department of Commerce, 1401 Constitution Avenue NW, Washington, DC 20230; telephone: (202) 482–4987 and (202) 482–5518, respectively.

SUPPLEMENTARY INFORMATION:

Background

On April 4, 2019, the petitioners filed a request that, pursuant to section 781(a) of the Tariff Act of 1930, as amended (the Act), Commerce initiate an anti-circumvention inquiry regarding imports of HFC components R–32, R–125, and R–143a from China that are further processed into HFC blends in the United States, which the petitioners allege are circumventing the *Order.*[1] On April 26, 2019, National Refrigerants, Inc. (National Refrigerants) filed comments objecting to the petitioners' request to initiate an anti-circumvention inquiry regarding HFC components imported from China.[2] On May 13, 2019, the petitioners filed a response to National Refrigerants' comments.[3] On May 14, 2018, Zhejiang Quzhou Lianzhou Refrigerants Co., Ltd. (Lianzhou) also filed comments objecting to the petitioners' request to initiate an anti-circumvention inquiry regarding HFC components imported from China.[4]

Scope of the Order

The products subject to the *Order* are HFC blends. HFC blends covered by the scope are R–404A, a zeotropic mixture consisting of 52 percent 1,1,1 Trifluoroethane, 44 percent Pentafluoroethane, and 4 percent 1,1,1,2-Tetrafluoroethane; R–407A, a zeotropic mixture of 20 percent Difluoromethane, 40 percent Pentafluoroethane, and 40 percent 1,1,1,2-Tetrafluoroethane; R–407C, a zeotropic mixture of 23 percent Difluoromethane, 25 percent Pentafluoroethane, and 52 percent 1,1,1,2-Tetrafluoroethane; R–410A, a zeotropic mixture of 50 percent Difluoromethane and 50 percent Pentafluoroethane; and R–507A, an azeotropic mixture of 50 percent Pentafluoroethane and 50 percent 1,1,1-Trifluoroethane also known as R–507. The foregoing percentages are nominal percentages by weight. Actual percentages of single component refrigerants by weight may vary by plus or minus two percent points from the nominal percentage identified above.[5]

Any blend that includes an HFC component other than R–32, R–125, R–143a, or R–134a is excluded from the scope of the *Order.*

Excluded from the *Order* are blends of refrigerant chemicals that include products other than HFCs, such as blends including chlorofluorocarbons (CFCs), hydrochlorofluorocarbons (HCFCs), hydrocarbons (HCs), or hydrofluoroolefins (HFOs).

Also excluded from the *Order* are patented HFC blends, including, but not limited to, ISCEON® blends, including MO99™ (R–438A), MO79 (R–422A), MO59 (R–417A), MO49Plus™ (R–437A) and MO29™ (R–4 22D), Genetron® Performax™ LT (R–407F), Choice® R–421A, and Choice® R–421B.

HFC blends covered by the scope of the *Order* are currently classified in the Harmonized Tariff Schedule of the United States (HTSUS) at subheadings 3824.78.0020 and 3824.78.0050. Although the HTSUS subheadings are provided for convenience and customs purposes, the written description of the scope is dispositive.[6]

Merchandise Subject to the Anti-Circumvention Inquiry

This anti-circumvention inquiry covers imports of the HFC components R–32, R–125, and R–143a from China that are further processed in the United States to create an HFC blend that would be subject to the *Order.*

Initiation of Anti-Circumvention Proceeding

Section 781(a) of the Act and 19 CFR 351.225(g) provide that Commerce may find circumvention of an AD order when merchandise of the same class or kind as merchandise that is subject to the order is completed or assembled in the United States. In conducting anti-circumvention inquiries under section 781(a)(1) of the Act, Commerce relies upon the following criteria: (A) Merchandise sold in the United States is of the same class or kind as other merchandise that is subject to an AD order; (B) such merchandise sold in the United States is completed or assembled in the United States from parts or components produced in the foreign country with respect to which the AD order applies; (C) the process of assembly or completion in the United States is minor or insignificant; and (D) the value of the parts or components is a significant portion of the total value of the merchandise.

A. Merchandise of the Same Class or Kind

The petitioners provide evidence to demonstrate that various companies subject to the *Order* are importing R–32, R–125, or R–143a components from China to be blended into HFC blends covered by the *Order,* and, therefore, the requirements of section 781(a)(1)(A)(i) of the Act are satisfied.[7] Specifically, the petitioners provide evidence showing that since the establishment of the *Order,* Chinese companies have begun selling Chinese components to U.S. companies, which are blended in the United States to make the same merchandise covered by the scope of the *Order.*[8]

B. Completion of Merchandise in the United States

The petitioners provide evidence to demonstrate that certain U.S. companies are importing Chinese-made HFC components to be further blended into HFC blends covered by the *Order,* and, therefore, the requirements of section 781(a)(1)(B) of the Act are satisfied.[9] The petitioners point to evidence to demonstrate that patterns of trade have shifted from the investigation and show that Chinese companies are now exporting components, instead of in-

[1] *See* Petitioners' Letter, ''Hydrofluorocarbon Blends from the People's Republic of China: Request to Initiate Anti-Circumvention Inquiry Pursuant to Section 781(a) of the Act,'' dated April 4, 2019 (Initiation Request); *see also Hydrofluorocarbon Blends from the People's Republic of China: Antidumping Duty Order,* 81 FR 55436 (August 19, 2016) (*Order*).

[2] *See* National Refrigerants' Letter, ''Hydrofluorocarbon Blends from the People's Republic of China: Objection to Petitioners' Request for a § 781(a) Anti-Circumvention Inquiry and Request for a Meeting,'' dated April 26, 2019.

[3] *See* Petitioners' Letter, ''Hydrofluorocarbon Blends from the People's Republic of China; Request for Section 781(a) Investigation Regarding Certain Imported HFC Components: Response to National Refrigerants, Inc.,'' dated May 13, 2019.

[4] *See* Lianzhou's Letter, ''Zhejiang Quzhou Lianzhou Refrigerants Co., Ltd.'s Response to American HFC Coalition's Request for a § 781(a) Anti-Circumvention Inquiry and Request for Meeting, Antidumping Duty Order on Hydrofluorocarbon Blends from the People's Republic of China,'' dated May 14, 2019.

[5] R–404A is sold under various trade names, including Forane® 404A, Genetron® 404A, Solkane® 404A, Klea® 404A, and Suva®404A. R–407A is sold under various trade names, including Forane® 407A, Solkane® 407A, Klea®407A, and Suva®407A. R–407C is sold under various trade names, including Forane® 407C, Genetron® 407C, Solkane® 407C, Klea® 407C and Suva® 407C. R–410A is sold under various trade names, including EcoFluor R410, Forane® 410A, Genetron® R410A and AZ–20, Solkane® 410A, Klea® 410A, Suva® 410A, and Puron®. R–507A is sold under various trade names, including Forane® 507, Solkane® 507, Klea®507, Genetron®AZ–50, and Suva®507. R–32 is sold under various trade names, including Solkane®32, Forane®32, and Klea®32. R–125 is sold under various trade names, including Solkane®125, Klea®125, Genetron®125, and Forane®125. R–143a is sold under various trade names, including Solkane®143a, Genetron®143a, and Forane®125.

[6] *See Order.*

[7] *See* Initiation Request at 6–9, Exhibit 1 (iGas products website), Exhibit 2 (proprietary information), Exhibit 3 (iGas and BMP website), Exhibit 4 (proprietary information), Exhibit 5 (Florida Division of Corporations—Xianbin Meng Results), Exhibit 6 (proprietary information), and Exhibit 7 (Memorandum, ''Respondent Selection for the Antidumping Duty Investigation of Hydrofluorocarbon Blends and Components Thereof from the People's Republic of China,'' dated August 17, 2015 (Respondent Selection Memo)).

[8] *Id.*

[9] *Id.* at 9–12, Exhibit 2 (proprietary information), Exhibit 7 (Respondent Selection Memo), Exhibit 8 (Census Data), Exhibit 9 (proprietary information).

scope HFC blends, and U.S. companies which previously had imported blends are now importing these components for the purpose of blending them in the United States into covered HFC blends.[10]

C. Minor or Insignificant Process

Under sections 781(a)(1)(C) and 781(a)(2) of the Act, Commerce will take into account five factors to determine whether the process of assembly or completion of merchandise in the United States is minor or insignificant. Specifically, Commerce will consider: (A) The level of investment in the United States; (B) the level of research and development in the United States; (C) the nature of the production process in the United States; (D) the extent of production facilities in the United States; and (E) whether the value of processing performed in the United States represents a small proportion of the value of the merchandise sold in the United States.

(1) Level of Investment in the United States

The petitioners provide evidence, including information presented to the International Trade Commission (ITC) during its investigation, to demonstrate that blending is a simple and straightforward process that requires relatively small investment (less than one million dollars), as compared to an order of magnitude of 25 to one, or even 50 to one, larger investment for the manufacture of HFC components.[11]

(2) Level of Research and Development in the United States

The petitioners provide evidence to demonstrate that blending operations do not require significant research and development.[12]

(3) Nature of the Production Process in the United States

The petitioners provide evidence to demonstrate that the blending production process in the United States is a relatively simple process which only requires a holding tank for the finished HFC blend, some pipes, and a valve.[13] Further, the petitioners contend that there is no chemical reaction and no temperature change involved in blending HFC components, and simply involves combining the components in accordance with the blending recipe, then packaging the blend into various containers.[14]

(4) Extent of Production Facilities in the United States

The petitioners provide record evidence to demonstrate that blending is a simple operation that requires minimal personnel and very basic production facilities.[15] The petitioners assert that the blending process simply combines the components together according to the recipe, and then packages the finished blend into containers.[16]

(5) Value of Processing Performed in the United States

The petitioners provide an analysis based on proprietary information to demonstrate that the blending process represents a very small percent of the total value of the imported components from China.[17] Thus, the petitioners contend that such a small percentage of value-added represents a very small proportion of the value of the merchandise sold in the United States.

D. Value of Merchandise Produced in the Foreign Country Is a Significant Portion of the Value of the Merchandise

The petitioners provide record evidence to demonstrate that the components sourced from China are the primary inputs in the finished HFC blends and account for a significant portion of the total value of the merchandise, in accordance with section 781(a)(1)(D) of the Act.[18] For example, the petitioners point to evidence that the average unit value of R–32, R–125, and R–143a was $4.90 per-kilogram (kg) in 2018, while the average unit value of the in-scope HFC blends was $6.71 per-kg.[19]

E. Factors To Consider in Determining Whether Action Is Necessary

Section 781(a)(3) of the Act identifies additional factors that Commerce shall consider in determining whether to include parts or components in an AD order as part of an anti-circumvention inquiry, such as patterns of trade, including sourcing patterns, and affiliations. The petitioners contend that based on the proprietary information and other evidence on the record, certain imports of components used to produce blends subject to the *Order* represent a change in the pattern of trade.[20] In particular, the petitioners contend that there has been a surge of Chinese HFC components from various companies since the issuance of the *Order,* and this surge occurred at the same time HFC blends imported from China dramatically decreased from these same companies.[21] Further, given the large disparity between the production facilities, investment, and amount of production-related workers needed to produce HFC components as compared to blending such components, there is a significant incentive for companies to evade application of AD duties upon importation by shifting their blending operations to the United States.[22] The petitioners contend that this evidence points to a pattern of trade intended to be addressed by section 781(a) of the Act, which, if allowed to continue, will negate the effectiveness of the *Order.*

Conclusion

Based on the information provided by the petitioners, we determine that there is sufficient information to warrant an initiation of an anti-circumvention inquiry, pursuant to section 781(a) of the Act and 19 CFR 351.225(g). Commerce will determine whether the merchandise subject to the inquiry (as described in the ''Merchandise Subject to the Anti-Circumvention Inquiry'' section above) is circumventing the *Order* such that it should be included within the scope of the *Order.*

In accordance with 19 CFR 351.225(l)(2), if Commerce issues a preliminary affirmative determination, we will then instruct U.S. Customs and Border Protection to suspend liquidation and require a cash deposit of estimated duties, at the applicable rate, for each unliquidated entry of the merchandise at issue, entered or withdrawn from warehouse for consumption on or after the date of initiation of the inquiry.

Following consultation with interested parties, Commerce will establish a schedule for questionnaires and comments on the issues related to the inquiry. Before issuance of any affirmative determination, Commerce intends to notify the ITC of any proposed inclusion of the inquiry merchandise under the *Order* in accordance with section 781(e)(1)(A) of the Act. Pursuant to section 781(f) of the

[10] *Id.*

[11] *Id.* at 13–14, Exhibit 10 (ITC Staff Conference transcript), and Exhibit 11 (ITC Hearing transcript).

[12] *Id.*

[13] *Id.* at 14–15, Exhibit 11 (ITC Hearing transcript), Exhibit 12 (TTI Response to Section D QR), and Exhibit 13 (BMP Parking Lot Picture).

[14] *Id.*

[15] *Id.*

[16] *Id.*

[17] *Id.* at 15, Exhibit 8 (Census Data), Exhibit 14 (proprietary declaration), Exhibit 15 (proprietary information), and Exhibit 16 (proprietary information).

[18] *Id.* at 15–16 and Exhibit 8 (Census Data).

[19] *Id.*

[20] *Id.* at 16–19, Exhibit 2 (proprietary information), Exhibit 8 (Census Data), Exhibit 13 (BMP Parking Lot Picture), and Exhibit 17 (BMP Employees).

[21] *Id.*

[22] *Id.*

Act and 19 CFR 351.225(f)(5), Commerce intends to issue its final determination within 300 days of the date of publication of this initiation.

Notification to Interested Parties

This notice is published in accordance with section 781(a) of the Act and 19 CFR 351.225(g).

Dated: June 12, 2019.

Jeffrey I. Kessler,

Assistant Secretary for Enforcement and Compliance.

[FR Doc. 2019–12849 Filed 6–17–19; 8:45 am]

BILLING CODE 3510–DS–P

DEPARTMENT OF COMMERCE

International Trade Administration

[A–570–028]

Hydrofluorocarbon Blends From the People's Republic of China: Initiation of Anti-Circumvention Inquiry of Antidumping Duty Order; Unfinished Blends

AGENCY: Enforcement and Compliance, International Trade Administration, Department of Commerce.

SUMMARY: In response to information from U.S. Customs and Border Protection (CBP) and allegations of circumvention from the American HFC Coalition (the petitioners), the Department of Commerce (Commerce) is initiating an anti-circumvention inquiry to determine whether imports of unfinished blends of hydrofluorocarbon (HFC) components R–32 and R–125 from the People's Republic of China (China) that are further processed into finished HFC blends in the United States are circumventing the antidumping duty (AD) order on HFC blends from China.

DATES: Applicable June 18, 2019.

FOR FURTHER INFORMATION CONTACT: Andrew Medley or Manuel Rey, AD/CVD Operations, Office II, Enforcement and Compliance, International Trade Administration, U.S. Department of Commerce, 1401 Constitution Avenue NW, Washington, DC 20230; telephone: (202) 482–4987 and (202) 482–5518, respectively.

SUPPLEMENTARY INFORMATION:

Background

Commerce received information from CBP relating to the *Order* on HFC blends from China regarding certain blends comprised of HFC components R–32 and R–125, which closely resemble subject HFC blends from China.[1] On April 2, 2018, Commerce published a notice that it was opening a scope segment of the proceeding and provided an opportunity for interested parties to comment.[2] On June 12, 2018, the petitioners filed comments on the CBP entry packages;[3] on June 18, 2018, Weitron, Inc. and Weitron International Refrigeration Equipment (Kunshan) Co., Ltd. (collectively, Weitron) filed rebuttal comments.[4]

On August 14, 2018, the petitioners filed a request that, pursuant to section 781(a) of the Tariff Act of 1930, as amended (the Act), Commerce initiate an anti-circumvention inquiry regarding imports of unfinished blends of HFC components R–32 and R–125 from China that are further processed into finished HFC blends in the United States, which the petitioners allege are circumventing the *Order*.[5] On August 23, 2018, Weitron submitted rebuttal comments.[6]

Scope of the Order

The products subject to the *Order* are HFC blends. HFC blends covered by the scope are R–404A, a zeotropic mixture consisting of 52 percent 1,1,1 Trifluoroethane, 44 percent Pentafluoroethane, and 4 percent 1,1,1,2-Tetrafluoroethane; R–407A, a zeotropic mixture of 20 percent Difluoromethane, 40 percent Pentafluoroethane, and 40 percent 1,1,1,2-Tetrafluoroethane; R–407C, a zeotropic mixture of 23 percent Difluoromethane, 25 percent Pentafluoroethane, and 52 percent 1,1,1,2-Tetrafluoroethane; R–410A, a zeotropic mixture of 50 percent Difluoromethane and 50 percent Pentafluoroethane; and R–507A, an azeotropic mixture of 50 percent Pentafluoroethane and 50 percent 1,1,1-Trifluoroethane also known as R–507. The foregoing percentages are nominal percentages by weight. Actual percentages of single component refrigerants by weight may vary by plus or minus two percent points from the nominal percentage identified above.[7]

Any blend that includes an HFC component other than R–32, R–125, R–143a, or R–134a is excluded from the scope of the *Order.*

Excluded from the *Order* are blends of refrigerant chemicals that include products other than HFCs, such as blends including chlorofluorocarbons (CFCs), hydrochlorofluorocarbons (HCFCs), hydrocarbons (HCs), or hydrofluoroolefins (HFOs).

Also excluded from the *Order* are patented HFC blends, including, but not limited to, ISCEON® blends, including MO99™ (R–438A), MO79 (R–422A), MO59 (R–417A), MO49Plus™ (R–437A) and MO29™ (R–4 22D), Genetron® Performax™ LT (R–407F), Choice® R–421A, and Choice® R–421B.

HFC blends covered by the scope of the *Order* are currently classified in the Harmonized Tariff Schedule of the United States (HTSUS) at subheadings 3824.78.0020 and 3824.78.0050. Although the HTSUS subheadings are provided for convenience and customs purposes, the written description of the scope is dispositive.[8]

Merchandise Subject to the Anti-Circumvention Inquiry

This anti-circumvention inquiry covers imports of partially finished blends of HFC components R–32 and R–125 from China that are further processed in the United States to create

---

[1] *See Hydrofluorocarbon Blends from the People's Republic of China: Antidumping Duty Order,* 81 FR 55436 (August 19, 2016) (*Order*).

[2] *See 1-Hydroxyethylidene-1, 1-Diphosphonic Acid from the People's Republic of China; Cold-Rolled Steel Flat Products from Japan; Hydrofluorocarbon Blends from the People's Republic of China; Light-Walled Rectangular Pipe and Tube from the People's Republic of China: Opening of Scope Segments and Opportunity to Comment,* 83 FR 13952 (April 2, 2018) (*Opening of Scope Segments*).

[3] *See* Petitioners' Letter, ''Hydrofluorocarbon Blends from the People's Republic of China: Comments on Scope Segment for Certain R–32/R–125 Blends,'' dated June 12, 2018.

[4] *See* Petitioners' Letter, ''Weitron's Response to American HFC Coalition's Comments on Scope Segment, Antidumping Duty Order on Hydrofluorocarbon Blends from the People's Republic of China,'' dated June 18, 2018.

[5] *See* Petitioners' Letter, ''Hydrofluorocarbon Blends from the People's Republic of China: Scope Investigation Regarding Certain R–32/R–125 Blends: Request to Apply Section 781(a) to Prevent Circumvention,'' dated August 14, 2018 (Initiation Request).

[6] *See* Weitron's Letter, ''Weitron's Response to Anti-Circumvention Allegation; Request to Reject, or Alternatively, Request for Extension of Time to Reply: Antidumping Duty Order on Hydrofluorocarbon Blends from the People's Republic of China,'' dated August 23, 2018 (Weitron's August 23, 2018 Response to Anti-Circumvention Allegation).

[7] R–404A is sold under various trade names, including Forane® 404A, Genetron® 404A, Solkane® 404A, Klea® 404A, and Suva®404A. R–407A is sold under various trade names, including Forane® 407A, Solkane® 407A, Klea®407A, and Suva®407A. R–407C is sold under various trade names, including Forane® 407C, Genetron® 407C, Solkane® 407C, Klea® 407C and Suva® 407C. R–410A is sold under various trade names, including EcoFluor R410, Forane® 410A, Genetron® R410A and AZ–20, Solkane® 410A, Klea® 410A, Suva® 410A, and Puron®. R–507A is sold under various trade names, including Forane® 507, Solkane® 507, Klea®507, Genetron®AZ–50, and Suva®507. R–32 is sold under various trade names, including Solkane®32, Forane®32, and Klea®32. R–125 is sold under various trade names, including Solkane®125, Klea®125, Genetron®125, and Forane®125. R–143a is sold under various trade names, including Solkane®143a, Genetron®143a, and Forane®125.

[8] *See Order.*

an HFC blend that would be subject to the *Order.*

Initiation of Anti-Circumvention Proceeding

Section 781(a) of the Act and 19 CFR 351.225(g) provide that Commerce may find circumvention of an AD order when merchandise of the same class or kind as merchandise that is subject to the order is completed or assembled in the United States. In conducting anti-circumvention inquiries under section 781(a)(1) of the Act, Commerce relies upon the following criteria: (A) Merchandise sold in the United States is of the same class or kind as other merchandise that is subject to an AD order; (B) such merchandise sold in the United States is completed or assembled in the United States from parts or components produced in the foreign country with respect to which the AD order applies; (C) the process of assembly or completion in the United States is minor or insignificant; and (D) the value of the parts or components is a significant portion of the total value of the merchandise.

A. Merchandise of the Same Class or Kind

The petitioners claim that, because the imported R–32/R–125 blend produced in China may be further processed into an HFC blend covered by the *Order* and sold in the United States it meets the requirements of section 781(a)(1)(A)(i) of the Act.[9] Additionally, Commerce received information from CBP showing U.S. entries of merchandise similar to the HFC blends covered by the scope of the *Order.*[10] Therefore, Commerce opened up a segment entitled ''Certain R–32/R–125 Blends,'' to place the information received from CBP on the record of the proceeding.[11]

B. Completion of Merchandise in the United States

The petitioners contend that, in order to be sold in the United States, the imported R–32/R–125 blend, produced in China, must be further processed in accordance with regulations of the Environmental Protection Agency and AHRI Standard 700–2012 before sale in the United States.[12] Specifically, the petitioners argue that the chemical composition of the unfinished R–32/R–125 blend can be further processed into R–407A, R–407C, and R–410A.[13] However, the semi-finished blends are imported in a composition that cannot be sold in the U.S. market and, therefore, must be adjusted after importation to be sold in the United States.[14] Therefore, the requirements of section 781(a)(1)(B) of the Act are satisfied.

C. Minor or Insignificant Process

Under sections 781(a)(1)(C) and 781(a)(2) of the Act, Commerce will take into account five factors to determine whether the process of assembly or completion of merchandise in the United States is minor or insignificant. Specifically, Commerce will consider: (A) The level of investment in the United States; (B) the level of research and development in the United States; (C) the nature of the production process in the United States; (D) the extent of production facilities in the United States; and (E) whether the value of processing performed in the United States represents a small proportion of the value of the merchandise sold in the United States.

(1) Level of Investment in the United States

Relying on evidence presented during the investigation to the International Trade Commission (ITC), the petitioners state that a relatively small investment is required for blending (approximately $1 million), compared to an order of magnitude larger investment of 25 to one or even 50 to one larger investment for the manufacture of HFC components.[15] Further, even accepting Weitron's statement that it has announced an investment of approximately $14 million to construct a new refrigerant plant, the petitioners argue that such an investment is not significant in comparison to the investment required to manufacture HFC components.[16]

(2) Level of Research and Development in the United States

The petitioners state that no research and development is required for blending operations and rely on evidence provided during the ITC's investigation to demonstrate that blending can be performed by relatively unskilled workers with little training.[17]

(3) Nature of the Production Process in the United States

Relying on evidence provided during the ITC's investigation and evidence from Commerce's investigation, the petitioners state that the production process to blend HFC components only requires a holding tank for the finished HFC blend, some pipes, and a valve and is a very simple mixing operation with no chemical reaction and no temperature change involved.[18] To add a single HFC component to a R–32/R–125 blend only requires a holding tank into which the component would be introduced. Additionally, the petitioners point to evidence from the ITC's investigation that there are numerous ''re-claimers'' that are capable of re-creating the subject HFC blends using recycled components that have been recovered from existing equipment, ''cleaning'' those components, and adding R–32, R–125 or R–143a, as necessary, to bring the blend back to its original specifications.[19] The petitioners also point to statements from CBP on the record of the underlying investigation that HFC blends are easy and require little equipment to mix, and that it would be possible to import HFC mixtures outside the scope of the *Order* which could be re-blended into subject merchandise.[20]

(4) Extent of Production Facilities in the United States

Relying on evidence from the ITC's investigation, the petitioners state that blending is a simple operation that requires minimal personnel and very basic production facilities, especially as

[9] *See* Initiation Request at 7–9, where the petitioners identify subject blends R–407A, R–407C, and R–410A as being composed of R–32 and R–125 (R–407A and R–407C also include the additional HFC component R–134a).

[10] The information received from CBP is business proprietary. *See* Memorandum, ''Hydrofluorocarbon Blends from the People's Republic of China: Placing Entry Documentation on the Record,'' dated April 11, 2018 (HFCs CBP Memo) at Attachments; *see also* Petitioners' Letter, ''Hydrofluorocarbon Blends from the People's Republic of China: Comments on Scope Segment for Certain R–32/R–125 Blends,'' dated June 12, 2018 (Petitioners' June 12, 2018 Scope Comments) at 8–9.

[11] *See Opening of Scope Segments,* 83 FR at 13953.

[12] *See* Petitioners' June 12, 2018 Scope Comments at 4 (stating ''the imported blend would have to be adjusted to a 50/50 ratio. To accomplish this, an importer could add R–32 or R–125 after entry to arrive at the correct ratio prescribed by the AHRI specifications.''); *see also* Weitron's Letter, ''Weitron's Response to American HFC Coalition's Comments on Scope Segment, Antidumping Duty Order on Hydrofluorocarbon Blends from the People's Republic of China,'' dated June 18, 2018 at 3 (''the semi-finished blends require further processing before they can be sold in the United States.'').

[13] *See* Initiation Request at 7–9.

[14] *Id.* at 8–9.

[15] *Id.* at 14–15 and Exhibits 1 and 3 (ITC Hearing and ITC Conference transcripts).

[16] *Id.* at 14–15 (citing Weitron's Scope Comments).

[17] *Id.* at 14–15 and Exhibit 1 (ITC Hearing transcript).

[18] *Id.* at 11 and Exhibit 1 and Exhibit 2 (ITC Hearing transcript and TTI Section D Response).

[19] *Id.* at 12–13 and Exhibit 3 (ITC Conference transcript).

[20] *Id.* at 13 and Exhibit 4 (Memorandum regarding Commerce's conference call with Customs).

compared to the operation of a facility that makes the components.[21]

(5) Value of Processing Performed in the United States

The petitioners provide proprietary information as well as import data to demonstrate that the blending process represents a very small cost—just three percent—relative to the value of the blends imported from China.[22] The petitioners further argue that during the investigation Commerce determined that blending costs do not reach the level of significance to substantially transform the country of origin of the single components.[23]

D. Value of Merchandise Produced in the Foreign Country Is a Significant Portion of the Value of the Merchandise

The petitioners point to proprietary information, including the information provided by CBP, as well as import data to demonstrate that the unfinished R–32/R–125 blends are sourced from China and, given that it is a simple mixing operation, this blending does not require significant investment, research and development, or processing.[24] Thus, the petitioners argue that the merchandise produced in China is a significant portion of the value of the merchandise sold in the United States.[25]

E. Factors To Consider in Determining Whether Action Is Necessary

Section 781(a)(3) of the Act identifies additional factors that Commerce shall consider in determining whether to include parts or components in an AD order as part of an anti-circumvention inquiry. Section 781(a)(3)(A) of the Act addresses whether the importation of the circumventing merchandise represents a change in the pattern of trade. Based on the proprietary information on the record, including information provided by CBP, the petitioners argue that certain imports of blends made with R–32 and R–125, similar to subject merchandise, represent a change in the pattern of trade and,[26] as such, it appears that the only reason not to complete the blending in the country of origin is to evade application of AD duties upon importation. Section 781(a)(3)(C) of the Act addresses whether imports into the United States of the parts or components produced in the foreign country increased after the initiation of the investigation. The petitioners state that published import statistics do not reveal the extent to which R–32/R–125 blends are imported from China and completed and sold in the United States; however, the petitioners rely on proprietary information and information from the ITC's investigation to demonstrate that there is a large capability for numerous facilities to adopt this approach, which could result in a negation of the effect of the *Order*.[27]

Conclusion

Based on the information on the record, we determine that there is sufficient information to warrant an initiation of an anti-circumvention inquiry, pursuant to section 781(a) of the Act and 19 CFR 351.225(g). Commerce will determine whether the merchandise subject to the inquiry (as described in the ''Merchandise Subject to the Anti-Circumvention Inquiry'' section above) is circumventing the *Order* such that it should be included within the scope of the *Order.*

In accordance with 19 CFR 351.225(l)(2), if Commerce issues a preliminary affirmative determination, we will then instruct CBP to suspend liquidation and require a cash deposit of estimated duties, at the applicable rate, for each unliquidated entry of the merchandise at issue, entered or withdrawn from warehouse for consumption on or after the date of initiation of the inquiry.

Following consultation with interested parties, Commerce will establish a schedule for questionnaires and comments on the issues related to the inquiry. Before issuance of any affirmative determination, Commerce intends to notify the ITC of any proposed inclusion of the inquiry merchandise under the *Order* in accordance with section 781(e)(1)(A) of the Act. In accordance with section 781(f) of the Act and 19 CFR 351.225(f)(5), Commerce intends to issue its final determination within 300 days of the date of publication of this initiation.

Notification to Interested Parties

This notice is published in accordance with section 781(a) of the Act and 19 CFR 351.225(g).

Dated: June 12, 2019.

Jeffrey I. Kessler,

Assistant Secretary for Enforcement and Compliance.

[FR Doc. 2019–12848 Filed 6–17–19; 8:45 am]

BILLING CODE 3510–DS–P

[21] *Id.* at 15–16 and Exhibit 1 (ITC Hearing transcript).

[22] *Id.* at 16–17 and Exhibit 5 and Exhibit 6 (a proprietary agreement and Census import statistics).

[23] *Id.* at 17; *see also Hydrofluorocarbon Blends and Components Thereof from the People's Republic of China: Final Determination of Sales at Less Than Fair Value and Final Affirmative Determination of Critical Circumstances,* 81 FR 42314 (June 29, 2016) and accompanying Issues and Decision Memorandum at Comment 4.

[24] *Id.* at 17–19 (citing HFCs CBP Memo and Attachments) and Exhibit 5 and Exhibit 6 (a proprietary agreement and Census import statistics).

[25] *Id.* at 17–19.

[26] *Id.* at 19–21 (citing HFCs CBP Memo and Attachments).

[27] *See* Initiation Request at 21 and Exhibit 3 and Exhibit 4 (ITC Conference transcript and Memorandum regarding Commerce's conference call with Customs).

DEPARTMENT OF COMMERCE

International Trade Administration

[A–580–874]

Certain Steel Nails From the Republic of Korea: Preliminary Results of Antidumping Duty Administrative Review and Partial Rescission of Antidumping Duty Administrative Review; 2017–2018

AGENCY: Enforcement and Compliance, International Trade Administration, Department of Commerce.

SUMMARY: The Department of Commerce (Commerce) preliminarily determines that Daejin Steel Co. (Daejin), Je-il Wire Production Co., Ltd. (Je-il), Koram Inc. (Koram), and Korea Wire Co., Ltd. (Kowire), producers/exporters of merchandise subject to this administrative review, made sales of subject merchandise at less than normal value during the period of review (POR) July 1, 2017 through June 30, 2018.

DATES: Applicable June 18, 2019.

FOR FURTHER INFORMATION CONTACT: Ariela Garvett (Daejin), Lilit Astvatsatrian (Je-il and Koram), and Maliha Khan (Kowire), AD/CVD Operations, Office IV, Enforcement and Compliance, International Trade Administration, U.S. Department of Commerce, 1401 Constitution Avenue NW, Washington, DC 20230; telephone: (202) 482–3609, (202) 482–6412, or (202) 482–0895, respectively.

SUPPLEMENTARY INFORMATION:

Background

On July 3, 2017, Commerce published in the **Federal Register** a notice of opportunity to request an administrative review of the antidumping duty (AD) order on certain steel nails (steel nails) from Korea.[1] On July 13 and July 31,

[1] *See Antidumping or Countervailing Duty Order, Finding, or Suspended Investigation; Opportunity to Request Administrative Review,* 83 FR 31121 (July 3, 2018).

2018, Koram,[2] Daejin,[3] and Kowire[4] each requested an administrative review, and the petitioner[5] requested an administrative review of 154 producers and/or exporters, including Daejin, Koram, Kowire, and Je-il. On September 24, 2018, the petitioner withdrew its administrative review request with respect to 150 of the 154 companies and maintained its administrative review request with respect to: Daejin, Je-il, Koram, and Kowire.[6]

Partial Rescission of Administrative Review

Commerce received timely requests to conduct an administrative review of certain exporters covering the POR. Because the petitioner timely withdrew its request for review of all of the companies listed in the *Initiation Notic*e, with the exception of Daejin, Je-il, Koram, and Kowire, we are rescinding this administrative review with respect to the remaining companies on which we initiated a review pursuant to 19 CFR 351.213(d)(1).[7] For a list of the companies for which we are rescinding this review, *see* Appendix II to this notice. Accordingly, the four companies subject to the instant review are: Daejin, Je-il, Koram, and Kowire.

The Preliminary Decision Memorandum, which is hereby adopted by this notice, is a public document and is on file electronically via Enforcement and Compliance's Antidumping and Countervailing Duty Centralized Electronic Service System (ACCESS). ACCESS is available to registered users at *http://access.trade.gov* and available to all parties in the Central Records Unit, room B8024 of the main Commerce building. In addition, a complete version of the Preliminary Decision Memorandum can be accessed directly on the internet at *http://enforcement.trade.gov/frn/*. The signed and electronic versions of the Preliminary Decision Memorandum are identical in content.

Scope of the Order

The merchandise covered by this order is certain steel nails having a nominal shaft length not exceeding 12 inches.[8] Merchandise covered by the order is currently classified under the Harmonized Tariff Schedule of the United States (HTSUS) subheadings 7317.00.55.02, 7317.00.55.03, 7317.00.55.05, 7317.00.55.07, 7317.00.55.08, 7317.00.55.11, 7317.00.55.18, 7317.00.55.19, 7317.00.55.20, 7317.00.55.30, 7317.00.55.40, 7317.00.55.50, 7317.00.55.60, 7317.00.55.70, 7317.00.55.80, 7317.00.55.90, 7317.00.65.30, 7317.00.65.60 and 7317.00.75.00. Certain steel nails subject to this order also may be classified under HTSUS subheadings 7907.00.60.00, 8206.00.00.00 or other HTSUS subheadings. While the HTSUS subheadings are provided for convenience and customs purposes, the written description of the scope of this order is dispositive. For a full description of the scope of the order, *see* the Preliminary Decision Memorandum.

Methodology

Commerce is conducting this review in accordance with section 751(a) of the Tariff Act of 1930, as amended (the Act). Export price is calculated in accordance with section 772 of the Act. Normal value is calculated in accordance with section 773 of the Act.

For a full description of the methodology underlying our conclusions, *see* the Preliminary Decision Memorandum. A list of topics included in the Preliminary Decision Memorandum is included as Appendix I to this notice.

Preliminary Results of Review

Commerce preliminarily determines that the following weighted-average dumping margins exist for the period July 1, 2017 through June 30, 2018:

Exporter and/or producer	Weighted-average dumping margin (percent)
Daejin Steel Company	5.43
Je-il Wire Production Co., Ltd	6.06
Koram Inc	7.34
Korea Wire Co., Ltd	5.47

Assessment Rates

Upon completion of the administrative review, Commerce shall determine, and U.S. Customs and Border Protection (CBP) shall assess, antidumping duties on all appropriate entries. Commerce intends to issue assessment instructions to CBP 15 days after the date of publication of the final results of this review.

For any individually examined respondents whose weighted-average dumping margin is above *de minimis* (*i.e.,* 0.50 percent), we will calculate importer-specific *ad valorem* duty assessment rates based on the ratio of the total amount of dumping calculated for the importer's examined sales to the total entered value of those same sales in accordance with 19 CFR 351.212(b)(1).[9] For entries of subject merchandise during the POR produced by each respondent for which it did not know its merchandise was destined for the United States, we will instruct CBP to liquidate un-reviewed entries at the all-others rate if there is no rate for the intermediate company involved in the transaction.[10] We will instruct CBP to assess antidumping duties on all appropriate entries covered by this review when the importer-specific assessment rate calculated in the final results of this review is above *de minimis.* Where either the respondent's weighted-average dumping margin is zero or *de minimis,* or an importer-specific assessment rate is zero or *de minimis,* we will instruct CBP to liquidate the appropriate entries without regard to antidumping duties.

For the 150 companies for which this review is rescinded, antidumping duties will be assessed at rates equal to the cash deposit of estimated antidumping duties in effect at the time of entry, or withdrawal from warehouse, for consumption, in accordance with 19 CFR 351.212(c)(1)(i). Commerce intends to issue appropriate assessment instructions directly to CBP 15 days after publication of this notice. The final results of this review shall be the basis for the assessment of antidumping duties on entries of merchandise covered by the final results of this review and for future deposits of estimated duties, where applicable.

[2] *See* Letter from Koram, ''Certain Steel Nails from Korea: Request for Administrative Review,'' dated July 13, 2018.

[3] *See* Letter from Daejin, ''Administrative Review of the Antidumping Duty Order on Certain Steel Nails from Korea—Request for Review,'' dated July 31, 2018.

[4] *See* Letter from Kowire, ''Steel Nails from the Republic of Korea—Request for Administrative Review,'' dated July 31, 2018.

[5] *See* Letter from the petitioner, ''Certain Steel Nails from Korea: Request for Administrative Reviews,'' dated July 31, 2018. The petitioner, Mid-Continent Steel & Wire, Inc., (the petitioner) a domestic producer of steel nails.

[6] *See* Letter from the petitioner, ''Certain Steel Nails from Korea: Withdrawal of Requests for Administrative Reviews,'' dated September 24, 2018.

[7] *Id.*

[8] The shaft length of certain steel nails with flat heads or parallel shoulders under the head shall be measured from under the head or shoulder to the tip of the point. The shaft length of all other certain steel nails shall be measured overall.

[9] In these preliminary results, Commerce applied the assessment rate calculation methodology adopted in *Antidumping Proceedings: Calculation of the Weighted-Average Dumping Margin and Assessment Rate in Certain Antidumping Proceedings: Final Modification,* 77 FR 8101 (February 14, 2012).

[10] *See Antidumping and Countervailing Duty Proceedings: Assessment of Antidumping Duties,* 68 FR 23954 (May 6, 2003).

Cash Deposit Requirement

The following deposit requirements will be effective upon publication of the notice of the final results of administrative review for all shipments of steel nails from Korea entered, or withdrawn from warehouse, for consumption on or after the date of publication of the final results of this administrative review, as provided by section 751(a)(2)(C) of the Act: (1) The cash deposit rate for the companies under review will be the rate established in the final results of this review (except, if the rate is zero or *de minimis,* no cash deposit will be required); (2) for merchandise exported by manufacturers or exporters not covered in this review but covered in a prior segment of the proceeding, the cash deposit rate will continue to be the company-specific rate published for the most recently completed segment of this proceeding in which the manufacturer or exporter participated; (3) if the exporter is not a firm covered in this review, a prior review, or the less-than-fair-value investigation, but the manufacturer is, the cash deposit rate will be the rate established for the most recently completed segment of the proceeding for the manufacturer of the merchandise; and (4) the cash deposit rate for all other manufacturers or exporters will continue to be 11.80 percent *ad valorem,* the all-others rate established in the less-than-fair value investigation.[11]

Disclosure and Public Comment

Commerce intends to disclose the calculations used in our analysis to interested parties in this review within five days of the date of publication of this notice in accordance with 19 CFR 351.224(b). Interested parties are invited to comment on the preliminary results of this review. Pursuant to 19 CFR 351.309(c)(1)(ii), interested parties may submit case briefs no later than 30 days after the date of publication of this notice. Rebuttal briefs, limited to issues raised in the case briefs, may be filed no later than five days after the time limit for filing case briefs.[12] Parties who submit case briefs or rebuttal briefs in this proceeding are requested to submit with each brief: (1) A statement of the issues, (2) a brief summary of the argument, and (3) a table of authorities.[13] Executive summaries should be limited to five pages total, including footnotes.[14] Case and rebuttal briefs should be filed using ACCESS.[15]

Pursuant to 19 CFR 351.310(c), any interested party may request a hearing within 30 days of the publication of this notice in the **Federal Register**. If a hearing is requested, Commerce will notify interested parties of the hearing schedule. Interested parties who wish to request a hearing, or to participate if one is requested, must submit a written request to the Assistant Secretary for Enforcement and Compliance, filed electronically via ACCESS within 30 days after the date of publication of this notice. Requests should contain: (1) The party's name, address, and telephone number; (2) the number of participants; and (3) a list of the issues to be discussed. Issues raised in the hearing will be limited to those raised in the respective case and rebuttal briefs.

We intend to issue the final results of this administrative review, including the results of our analysis of issues raised by the parties in the written comments, within 120 days of publication of these preliminary results in the **Federal Register**, unless otherwise extended.[16]

Notification to Importers

This notice also serves as a preliminary reminder to importers of their responsibility under 19 CFR 351.402(f) to file a certificate regarding the reimbursement of antidumping duties prior to liquidation of the relevant entries during this review period. Failure to comply with this requirement could result in Commerce's presumption that reimbursement of antidumping duties occurred and the subsequent assessment of double antidumping duties.

Notification to Interested Parties

We are issuing and publishing this notice in accordance with sections 751(a)(1) and 777(i)(1) of the Act and 19 CFR 351.221(b)(4).

Dated: June 11, 2019.

Jeffrey I. Kessler,

Assistant Secretary for Enforcement and Compliance.

Appendix I

List of Topics Discussed in the Preliminary Decision Memorandum

I. Summary
II. Background
III. Scope of the Order
IV. Rescission of Review, In Part
V. Discussion of the Methodology
  A. Comparisons to Normal Value
  B. Product Comparisons
  C. Date of Sale
  D. Level of Trade
  E. Export Price
  F. Normal Value
VI. Currency Conversions
VII. Recommendation

Appendix II

Ahri International
Aironware Enterprise (China) Ltd.
Ansing Fasteners Co., Ltd.
Ansing Rich Tech & Trade Co. Ltd.
Astrotech Steels Private Limited
Baoding Jieboshun Trading Corp. Ltd.
Beijing Catic Industry Ltd.
Beijing Jin Heung Co. Ltd.
Beijing Qin Li Jeff Trading Co., Ltd.
Bestbond International Limited
Bipex Co., Ltd.
Bolung International Trading Co., Ltd.
Cana (Rizhao) Hardware Co. Ltd.
Canaxy Asia Inc.
Cangzhou Nandagang Guotai Hardware Products Co., Ltd.
Caribbean International Co. Ltd.
China Dinghao Co., Ltd.
China Staple Enterprise Co. Ltd
Chinatrans International Ltd.
Chongqing Welluck Trading Co. Ltd.
CKX Co. Ltd.
Crelux International Co. Ltd.
Dezhou Hualude Hardware Products Co., Ltd.
Dong E Fuqiang Metal Products Co. Ltd.
Dong Yang Diecasting Co., Ltd.
Duo-Fast Korea Co., Ltd.
ECI Taiwan Co., Ltd.
Eco Steel Co., Ltd.
Eco-Friendly Floor Ltd.
Ejem Brothers Limited
England Rich Group (China) Ltd.
Expeditors Korea Ltd.
Faithful Engineering Products Co. Ltd.
Fastgrow International Co.
General Merchandise Consolidators Inc.
Glovis America
Guangdong Meite Mechanical Co., Ltd.
Guangdong TC Meite Intelligent Tool Co., Ltd.
Hebei Cangzhou New Century Foreign Trade Co., Ltd.
Hanmi Staple Co., Ltd.
Hanon Systems
Hebei Minmetals Co., Ltd.
Hebei Tinlin Metal Products Co., Ltd.
Hebei Tuohua Metal Products Co., Ltd.
Heilongjiang Linke Wooden Products Co., Ltd.
Hengtuo Metal Products Co Ltd.
Hi-Sharp Industrial Co., Ltd.
Hong Kong Hong Xing Da Trading Co. Ltd.
Hongyi Hardware Products Co., Ltd.
Huanghua Yingjin Hardware Products Co., Ltd.
Inmax Industries Sdn. Bhd
Inmax Sdn. Bhd.
Integral Building Products Inc.
Jeil Tacker Co. Ltd.
Jiaxing Slk Import & Export Co., Ltd.
Jinhai Hardware Co., Ltd.
Jinheung Steel Corporation
Jinkaiyi International Industry Co.
Jinsco International Corp.
Konad Co., Ltd.
Kuehne Nagel Ltd.
Max Co., Ltd.

[11] *See Certain Steel Nails from the Republic of Korea: Final Determination of Sales at Less Than Fair Value,* 80 FR 28955 (May 20, 2015).

[12] *See* 19 CFR 351.309(d)(1).

[13] *See* 19 CFR 351.309(c)(2) and (d)(2).

[14] *Id.*

[15] *See* 19 CFR 351.303.

[16] *See* section 751(a)(3)(A) of the Act.

Leling Taishan Artificial Turf Industry
Liaocheng Minghui Hardware Products
Linyi Flying Arrow Imp. & Exp. Ltd.
Mingguang Ruifeng Hardware Products Co., Ltd.
Nailtech Co. Ltd.
Nanjing Caiqing Hardware Co., Ltd.
Neo Gls
Nexen Corporation
Nexen L&C Corp.
OEC World Wide Korea Co. Ltd.
Oman Fasteners LLC
Overseas Distribution Services Inc.
Overseas International Steel Industry
Pantainer (H.K.) Limited
Peace Industries, Ltd.
Promising Way (Hong Kong) Limited
Qingdao Cheshire Trading Co. Ltd.
Qingdao D&L Group Ltd.
Qingdao Hongyuan Nail Industry Co. Ltd.
Qingdao JCD Machinery Co., Ltd.
Qingdao Jisco Co., Ltd.
Qingdao Master Metal Products Co. Ltd.
Qingdao Meijialucky Industry and Commerce Co., Ltd.
Qingdao Mst Industry and Commerce Co., Ltd.
Qingdao Rainbow Bird Metal Products Co., Ltd. West
Qingdao Tiger Hardware Co., Ltd.
Qingdao Top Steel Industrial Co., Ltd.
Rise Time Industrial Co. Ltd.
Sam Un Co. Ltd.
SDC International AUST. PTY Ltd.
Shandong Dinglong Imp. & Exp. Co. Ltd.
Shandong Liaocheng Minghua Metal PR
Shandong Oriental Cherry Hardware Group Co. Ltd.
Shandong Oriental Cherry Hardware Import & Export Co., Ltd.
Shandong Qingyun Hongyi Hardware Products Co., Ltd.
Shanghai Haoray International Trade Co. Ltd.
Shanghai Jade Shuttle Hardware Tools Co., Ltd.
Shanghai Lucky Angle Handicraft & Gift Co., Ltd.
Shanghai Pinnacle International Trading Co., Ltd.
Shanghai Zoonlion Industrial Co., Ltd.
Shanxi Fasteners & Hardware Products Co., Ltd.
Shanxi Hairui Trade Co., Ltd.
Shanxi Pioneer Hardware Industry Co., Ltd.
Shanxi Tianli Industries Co., Ltd.
Sherilee
Shijiazhuang Shuangjian Tools Co. Ltd.
Shijiazhuang Tops Hardware Manufacturing Co., Ltd.
S-Mart (Tianjin) Technology Development Co., Ltd.
Smile Industries Ltd.
Speedmark International Ltd.
Suntec Industries Co., Ltd.
Tianjin Coways Metal Products Co.
The Stanley Works (Langfang) Fastening System Co., Ltd.
T.H.I. Group Ltd.
Tianjin Bluekin Industries Limited
Tianjin Consol International Co., Ltd.
Tianjin Fulida Supply Co. Ltd.
Tianjin Huixinshangmao Co. Ltd.
Tianijn Hweschun Fasteners Manufacturing Co. Ltd.
Tianjin Jinchi Metal Products Co., Ltd.
Tianjin Lianda Group Co., Ltd.
Tianjin Liweitian Metal Technology
Tianjin Long Sheng Tai
Tianjin Zehui Hardware Co. Ltd.
Tianjin Zhonglian Metals Ware Co. Ltd.
Tianjin Jinzhuang Hardware Factory
Tianjin M&C Electronics Co., Ltd.
Tianjin Universal Machinery Imp. & Exp.
Tianjin Zhonglian Times Technology
Toyo Boeki Co. Ltd.
Trim International Inc.
Unicorn (Tianjin) Fasteners Co., Ltd.
W&K Corporation Limited
Weifang Wenhe Pneumatic Tools Co., Ltd.
Wire Products Manufacturing Co., Ltd.
Wulian Zhanpeng Metals Co., Ltd.
Xi'an Metals and Minerals Imp. Exp. Co., Ltd.
Xinjiayuan International Trade Co.
Xuzhou CIP International Group Co., Ltd.
Xinjiayuan Trading Co., Limited
You-One Fastening Systems
Youngwoo (Cangzhou) Fasteners Co., Ltd.
Youngwoo Fasteners Co., Ltd.
Yumark Enterprises Corp.
Zhaoqing Harvest Nails Co. Ltd.

[FR Doc. 2019–12839 Filed 6–17–19; 8:45 am]

BILLING CODE 3510–DS–P

DEPARTMENT OF COMMERCE

International Trade Administration

[A–570–028]

Hydrofluorocarbon Blends From the People's Republic of China: Initiation of Anti-Circumvention Inquiry of Antidumping Duty Order; Unpatented R–421A

AGENCY: Enforcement and Compliance, International Trade Administration, Department of Commerce.

SUMMARY: In response to a covered merchandise referral from U.S. Customs and Border Protection (CBP) and allegations of circumvention from the American HFC Coalition (the petitioners), the Department of Commerce (Commerce) is initiating an anti-circumvention inquiry to determine whether imports of non-patented R–421A (a blend of hydrofluorocarbon (HFC) components R–125 and R–134a) from the People's Republic of China (China) that are further processed into finished HFC blends in the United States are circumventing the antidumping duty (AD) order on HFC blends from China.

DATES: Applicable June 18, 2019.

FOR FURTHER INFORMATION CONTACT: Andrew Medley or Manuel Rey, AD/CVD Operations, Office II, Enforcement and Compliance, International Trade Administration, U.S. Department of Commerce, 1401 Constitution Avenue NW, Washington, DC 20230; telephone: (202) 482–4987 and (202) 482–5518, respectively.

SUPPLEMENTARY INFORMATION:

Background

On November 30, 2017, Choice Refrigerants (Choice) filed a scope ruling request that Commerce determine if non-patented R–421A HFCs imported from China qualify for the exclusion in the scope of the *Order* on HFC blends from China.[1] On December 4, 2017, Commerce received a covered merchandise referral from CBP regarding CBP Enforce and Protect Act (EAPA) Investigation No. 7212.[2] On December 27, 2017, LM Supply Inc. (LM Supply) submitted comments on Choice's scope request.[3] On March 5, 2018, Commerce published a notice of covered merchandise referral providing parties notice of the referral and inviting participation from interested parties.[4]

On April 4, 2018, we sent a questionnaire to LM Supply regarding the product included in the referral from CBP;[5] on April 27, 2018, we received a response to the questionnaire from LM Supply.[6] On May 11, 2018, the American HFC Coalition and its individual members[7] filed deficiency comments as well as factual information in response to LM Supply's April 27, 2018 submission.[8]

On August 15, 2018, the petitioners filed a request that, pursuant to section

[1] *See* Letter from Choice, ''Application for Scope Ruling on Exclusion of Patented HFC Blends from Antidumping Duty Order A–570–028: Hydrofluorocarbon Blends and Components Thereof from the People's Republic of China,'' dated November 30, 2017 (Choice Scope Ruling Request); *see also Hydrofluorocarbon Blends from the People's Republic of China: Antidumping Duty Order*, 81 FR 55436 (August 19, 2016) (the *Order*).

[2] *See* Letter from CBP, ''EAPA Case Number: 7212; Scope Referral Request for merchandise under EAPA Investigation 7212, imported by LM Supply, Inc. and concerning the investigation of evasion of the antidumping duty order on hydrofluorocarbon blends from the People's Republic of China (A–570–028),'' dated December 4, 2017 (CBP EAPA Referral Letter) and accompanying Attachments.

[3] *See* LM Supply Letter, ''Comments in response to Kenneth Ponder's and Choice Refrigerants' November 30, 2017 Application for a Scope Ruling,'' dated December 27, 2017 (LM Supply Scope Comments).

[4] *See Hydrofluorocarbon Blends from the People's Republic of China: Notice of Covered Merchandise Referral,* 83 FR 9277 (March 5, 2018).

[5] *See* Letter to LM Supply re: ''Hydrofluorocarbon Blends from the People's Republic of China—Scope Ruling Supplemental Questionnaire,'' dated April 4, 2018.

[6] *See* LM Supply Letter, ''Hydrofluorocarbon Blends from the People's Republic of China: Supplemental Questionnaire Response,'' dated April 27, 2018 (LM Supply April 27, 2018 SQR).

[7] The American HFC Coalition includes Amtrol Inc., Arkema Inc., The Chemours Company FC LLC, Honeywell International Inc., Hudson Technologies Inc., Mexichem Fluor Inc., and Worthington Industries Inc. were the petitioners in the underlying investigation (the petitioners).

[8] *See* Petitioners' Letter, ''Hydrofluorocarbon Blends from the People's Republic of China: Submission of Factual Information in Response to Scope Exclusion Request,'' dated May 11, 2018.

781(a) of the Tariff Act of 1930, as amended (the Act), Commerce initiate an anti-circumvention inquiry regarding imports of non-patented R–421A (a blend of HFC components R–125 and R–134a) from China that are further processed into finished HFC blends in the United States, which the petitioners allege are circumventing the *Order.*[9] On September 6, 2018, LM Supply filed an objection to the petitioners' request for an anti-circumvention inquiry.[10] Also on September 6, Choice filed a response to the petitioners' allegation of circumvention, in which it reiterated its request that Commerce issue a determination in the scope ruling inquiry immediately, and also voiced its belief that LM Supply was circumventing the *Order.*[11] On September 24, 2018, Commerce received rebuttal comments to LM Supply's objection to the application of section 781(a) from the petitioners.[12]

Scope of the Order

The products subject to the *Order* are HFC blends. HFC blends covered by the scope are R–404A, a zeotropic mixture consisting of 52 percent 1,1,1 Trifluoroethane, 44 percent Pentafluoroethane, and 4 percent 1,1,1,2-Tetrafluoroethane; R–407A, a zeotropic mixture of 20 percent Difluoromethane, 40 percent Pentafluoroethane, and 40 percent 1,1,1,2-Tetrafluoroethane; R–407C, a zeotropic mixture of 23 percent Difluoromethane, 25 percent Pentafluoroethane, and 52 percent 1,1,1,2-Tetrafluoroethane; R–410A, a zeotropic mixture of 50 percent Difluoromethane and 50 percent Pentafluoroethane; and R–507A, an azeotropic mixture of 50 percent Pentafluoroethane and 50 percent 1,1,1-Trifluoroethane also known as R–507. The foregoing percentages are nominal percentages by weight. Actual percentages of single component refrigerants by weight may vary by plus or minus two percent points from the nominal percentage identified above.[13]

Any blend that includes an HFC component other than R–32, R–125, R–143a, or R–134a is excluded from the scope of the *Order.*

Excluded from the *Order* are blends of refrigerant chemicals that include products other than HFCs, such as blends including chlorofluorocarbons (CFCs), hydrochlorofluorocarbons (HCFCs), hydrocarbons (HCs), or hydrofluoroolefins (HFOs).

Also excluded from the *Order* are patented HFC blends, including, but not limited to, ISCEON® blends, including MO99™ (R–438A), MO79 (R–422A), MO59 (R–417A), MO49Plus™ (R–437A) and MO29™ (R–4 22D), Genetron® Performax™ LT (R–407F), Choice® R–421A, and Choice® R–421B.

HFC blends covered by the scope of the *Order* are currently classified in the Harmonized Tariff Schedule of the United States (HTSUS) at subheadings 3824.78.0020 and 3824.78.0050. Although the HTSUS subheadings are provided for convenience and customs purposes, the written description of the scope is dispositive.[14]

Merchandise Subject to the Anti-Circumvention Inquiry

This anti-circumvention inquiry covers imports of unpatented R–421A, a blend of HFC components R–125 and R–134a, from China that are further processed in the United States to create an HFC blend that would be subject to the *Order.*

Initiation of Anti-Circumvention Proceeding

Section 781(a) of the Act and 19 CFR 351.225(g) provide that Commerce may find circumvention of an AD order when merchandise of the same class or kind as merchandise that is subject to the order is completed or assembled in the United States. In conducting anti-circumvention inquiries under section 781(a)(1) of the Act, Commerce relies upon the following criteria: (A) Merchandise sold in the United States is of the same class or kind as other merchandise that is subject to an AD order; (B) such merchandise sold in the United States is completed or assembled in the United States from parts or components produced in the foreign country with respect to which the AD order applies; (C) the process of assembly or completion in the United States is minor or insignificant; and (D) the value of the parts or components is a significant portion of the total value of the merchandise.

A. Merchandise of the Same Class or Kind

The petitioners point to proprietary information to claim that imported unpatented R–421A, a blend of HFC components R–125 and R–134A, produced in China may be further processed into an HFC blend covered by the *Order* and sold in the United States.[15] The petitioners contend that, in principle, when starting with a blend of R–125 and R–134A it would be relatively simple to add additional HFC components R–32 or R–134A to obtain an in-scope HFC blend.[16] Further, the petitioners argue that the imported R–421A blend is not sold in the United States, but, rather, is consumed by LM Supply, and that LM Supply's affiliate, not LM Supply, sells HFC blends which are covered by the *Order.*[17] Therefore, the petitioners contend that the requirements of section 781(a)(1)(A)(i) of the Act are satisfied.

B. Completion of Merchandise in the United States

The petitioners point to record evidence to demonstrate that the imported unpatented R–421A blend is imported from China.[18] Therefore, the petitioners contend that the requirements of section 781(a)(1)(B) of the Act are satisfied.

C. Minor or Insignificant Process

Under sections 781(a)(1)(C) and 781(a)(2) of the Act, Commerce will take into account five factors to determine

[9] *See* Petitioners' Letter, ''Hydrofluorocarbon Blends from the People's Republic of China: Scope Investigation Regarding Certain Unpatented HFC Blends: Request to Apply Section 781(a) to Prevent Circumvention,'' dated August 15, 2018 (Initiation Request).

[10] *See* LM Supply's Letter, ''Hydrofluorocarbon Blends from the People's Republic of China: Scope Investigation Regarding Certain Unpatented HFC Blends: Objection to Petitioners' Request to Initiate Anti-Circumvention Proceedings Pursuant to Section 781(a),'' dated September 6, 2018.

[11] *See* Choice's Letter, ''Response of Choice Refrigerants to the American HFC Coalition's Request to Apply Section 781(a) to Prevent Circumvention; *Hydrofluorocarbon Blends from the People's Republic of China: Antidumping Duty Order,* DCK. A–570–028, 81 Fed. Reg. 55436 (Aug. 19, 2016),'' dated September 6, 2016.

[12] *See* Petitioners' Letter, ''Hydrofluorocarbon Blends from the People's Republic of China: Scope Investigation Regarding Certain Unpatented Blends: Response to LM Supply Inc.'s Objection to Application of Section 781(a) to Prevent Circumvention,'' dated September 24, 2018.

[13] R–404A is sold under various trade names, including Forane® 404A, Genetron® 404A, Solkane® 404A, Klea® 404A, and Suva®404A. R–407A is sold under various trade names, including Forane® 407A, Solkane® 407A, Klea®407A, and Suva®407A. R–407C is sold under various trade names, including Forane® 407C, Genetron® 407C, Solkane® 407C, Klea® 407C and Suva® 407C. R–410A is sold under various trade names, including EcoFluor R410, Forane® 410A, Genetron® R410A and AZ–20, Solkane® 410A, Klea® 410A, Suva® 410A, and Puron®. R–507A is sold under various trade names, including Forane® 507, Solkane® 507, Klea®507, Genetron®AZ–50, and Suva®507. R–32 is sold under various trade names, including Solkane®32, Forane®32, and Klea®32. R–125 is sold under various trade names, including Solkane®125, Klea®125, Genetron®125, and Forane®125. R–143a is sold under various trade names, including Solkane®143a, Genetron®143a, and Forane®125.

[14] *See Order.*

[15] *See* Initiation Request at 10–12 (citing LM Supply April 27, 2018 SQR; Choice Scope Ruling Request; and CBP EAPA Referral Letter and accompanying Attachment 2).

[16] *Id.* at 11.

[17] *Id.* at 10–12 (citing LM Supply April 27, 2018 SQR; Choice Scope Ruling Request; and CBP EAPA Referral Letter and accompanying Attachment 2).

[18] *See* Initiation Request at 12 (citing LM Supply Scope Comments).

whether the process of assembly or completion of merchandise in the United States is minor or insignificant. Specifically, Commerce will consider: (A) The level of investment in the United States; (B) the level of research and development in the United States; (C) the nature of the production process in the United States; (D) the extent of production facilities in the United States; and (E) whether the value of the processing performed in the United States represents a small proportion of the value of the merchandise sold in the United States.

(1) Level of Investment in the United States

The petitioners point to record evidence, including information presented to the International Trade Commission (ITC) during its investigation, to demonstrate that blending is a simple and straightforward process that requires relatively small investment, as compared to an investment to set-up a production facility to manufacture HFC components.[19] According to the petitioners, blending HFC components only requires a holding tank for the finished HFC blend, some pipes, and valves, and, further, adding a single HFC component to an existing R–125/R–134a blend requires a holding tank into which the component would be introduced.[20] Further, the petitioners contend that there is no chemical reaction and no temperature change involved in blending two or more HFC components, and simply involves combining the components in accordance with the blending recipe, then packaging the blend into various containers.[21] The petitioners further note that LM Supply has not provided information regarding its investment in the United States in blending operations. The petitioners provided information indicating that blending requires less than a one million dollar investment, while a production facility to manufacture HFC components requires an investment of hundreds of millions of dollars in equipment needed to handle high-hazard reaction and purification processes.[22] As such, petitioners contend that a significant level of investment in the United States is not required to perform blending.

(2) Level of Research and Development in the United States

The petitioners assert that LM Supply does not identify any research and development required to blend HFC components or undertake such operations.[23]

(3) Nature of the Production Process in the United States

The petitioners provide record evidence to demonstrate that blending is a simple production process consisting of blending two components together, and consists of ISO tanks and only a handful of workers.[24] The petitioners further contend that blending requires a different level of expertise and much fewer workers than producing HFC components.[25] As such, the petitioners contend that the nature of the production process in the United States appears to be neither complex nor significant.

(4) Extent of Production Facilities in the United States

The petitioners provide record evidence to demonstrate that the extent of production facilities in the United States, as compared to the production of HFC components, is minimal.[26]

(5) Value of Processing Performed in the United States

The petitioners provide an analysis based on proprietary information to demonstrate that the blending and re-packaging in the United States amounts to a very small percent of the total value of the imported R–421A.[27] The petitioners further point to Commerce's determination in the underlying investigation that blending costs do not reach the level of significance to change the country of origin.[28] Thus, the petitioners contend that such a small percentage of value-added represents a very small proportion of the value of the merchandise sold in the United States.

D. Value of Merchandise Produced in the Foreign Country Is a Significant Portion of the Value of the Merchandise

Relying on proprietary information, the petitioners contend that the R–421A imported by LM Supply from China accounts for a significant portion of the total value of the merchandise, in accordance with section 781(a)(1)(D) of the Act.[29]

E. Factors To Consider in Determining Whether Action Is Necessary

Section 781(a)(3) of the Act identifies additional factors that Commerce shall consider in determining whether to include parts or components in an AD order as part of an anti-circumvention inquiry, such as patterns of trade, including sourcing patterns, and affiliations. The petitioners contend that based on the proprietary information on the record and other record evidence, LM Supply's imports of unpatented R–421A, which are sourced from a major Chinese exporter, and routed through Jamaica, represent a change in the pattern of trade.[30] Additionally, the petitioners contend that LM Supply's affiliation with BMP International, a major source of low-priced HFC blends in the investigation, further points to a pattern of trade intended to be addressed by section 781(a) of the Act, which, if allowed to continue, will negate the effectiveness of the *Order.*[31]

Conclusion

After analyzing the record evidence and the petitioners' allegation, we determine that there is sufficient information to warrant an initiation of a formal anti-circumvention inquiry, pursuant to section 781(a) of the Act and 19 CFR 351.225(g). Commerce will determine whether the merchandise subject to the inquiry (as described in the ''Merchandise Subject to the Anti-Circumvention Inquiry'' section above) is circumventing the *Order* such that it should be included within the scope of the *Order.* Additionally, as part of this anti-circumvention inquiry, we intend to address both the covered

[19] *See* Initiation Request at 13–16 (citing LM Supply April 27, 2018 SQR), Exhibit 1 (ITC Hearing transcript), Exhibit 2 (TTI Response to Section D), Exhibit 3 (ITC Conference transcript), Exhibit 4 (Memorandum to File, ''Antidumping Duty Investigation of Hydrofluorocarbon Blends and Components (HFCs) from the People's Republic of China: Conference Call with Officials from U.S. Customs and Border Protection (CBP),'' dated July 30, 2015 (CBP Conference Call Memo)).

[20] *Id.* at 14.

[21] *Id.* at 14 and Exhibit 2 (TTI Response to Section D).

[22] *Id.* at 15 and Exhibits 1 and 3 (ITC Conference transcript and ITC Hearing transcript).

[23] *Id.* at 16.

[24] *Id.* at 16–17 and Exhibit 1 (ITC Hearing transcript).

[25] *Id.*

[26] *Id.*

[27] *Id.* at 17–18 (citing Memorandum to the File, ''Hydrofluorocarbon Blends from the People's Republic of China: Placement of CBP Letter and Attachments,'' dated March 6, 2018, enclosing LM Supply's response to a CBP Form 28, dated February 13, 2018 (and enclosed ''Proforma Invoice'') and Exhibit 5 (a proprietary agreement demonstrating the cost to blend HFC components).

[28] *Id.* at 18; *see also Hydrofluorocarbon Blends and Components Thereof from the People's Republic of China: Final Determination of Sales at Less Than Fair Value and Final Affirmative Determination of Critical Circumstances,* 81 FR 42314 (June 29, 2016), and accompanying Issues and Decision Memorandum at Comment 4.

[29] *Id.* at 19 (citing LM Supply April 27, 2018 SQR).

[30] *Id.* at 20–21 (citing CBP EAPA Referral Letter and accompanying Attachment 2), Exhibit 4 (CBP Conference Call Memo), Exhibit 6 (presentation by the HFC Coalition to CBP, dated March 10, 2017), and Exhibit 7 (Kivlan and Company Scope Comments).

[31] *Id.* at 20–21.

merchandise referral from CBP and the scope inquiry filed by Choice under 19 CFR 351.225(c).[32] Our final findings in this anti-circumvention inquiry will also include a response to the covered merchandise referral and a final finding with regards to Choice's scope inquiry.[33]

In accordance with 19 CFR 351.225(l)(2), if Commerce issues a preliminary affirmative determination, we will then instruct CBP to suspend liquidation and require a cash deposit of estimated duties, at the applicable rate, for each unliquidated entry of the merchandise at issue, entered or withdrawn from warehouse for consumption on or after the date of initiation of the inquiry.

Following consultation with interested parties, Commerce will establish a schedule for questionnaires and comments on the issues related to the inquiry. Before issuance of any affirmative determination, Commerce intends to notify the ITC of any proposed inclusion of the inquiry merchandise under the *Order* in accordance with section 781(e)(1)(A) of the Act. Pursuant to section 781(f) of the Act and 19 CFR 351.225(f)(5), Commerce intends to issue its final determination within 300 days of the date of publication of this initiation.

Notification to Interested Parties

This notice is published in accordance with section 781(a) of the Act and 19 CFR 351.225(g).

Dated: June 12, 2019.

Jeffrey I. Kessler,

Assistant Secretary for Enforcement and Compliance.

[FR Doc. 2019–12842 Filed 6–17–19; 8:45 am]

BILLING CODE 3510–DS–P

[32] *See* CBP EAPA Referral Letter and Choice Scope Ruling Request.

[33] We aligned the EAPA referral and Choice's request for a scope ruling on unpatented R–421A because they cover the same merchandise. *See* Memorandum, ''Alignment of Scope Inquiry and EAPA Referral on Unpatented R–421A,'' dated March 5, 2018. Additionally, the petitioners filed their anti-circumvention inquiry request onto the record of the scope inquiry involving R–421 unpatented blends at the same time that they also filed their anti-circumvention inquiry request onto the record of the EAPA investigation. *See* Initiation Request.

CORPORATION FOR NATIONAL AND COMMUNITY SERVICE

Agency Information Collection Activities; Submission to the Office of Management and Budget for Review and Approval; Comment Request; Application Package for National Service Trust AmeriCorps Voucher and Payment Request Form/National Service Trust AmeriCorps—Manual Payment Request Form

AGENCY: Corporation for National and Community Service (CNCS).

ACTION: Notice of information collection; request for comment.

SUMMARY: In accordance with the Paperwork Reduction Act of 1995, CNCS is proposing to renew an information collection.

DATES: Written comments must be submitted to the individual and office listed in the **ADDRESSES** section by August 19, 2019.

ADDRESSES: You may submit comments, identified by the title of the information collection activity, by any of the following methods:

(1) *By mail sent to:* Corporation for National and Community Service, Attention: Nahid Jarrett, 250 E Street SW, Washington, DC 20525.

(2) By hand delivery or by courier to the CNCS mailroom at the mail address given in paragraph (1) above, between 9:00 a.m. and 4:00 p.m. Eastern Time, Monday through Friday, except federal holidays.

(3) Electronically through *www.regulations.gov.*

Individuals who use a telecommunications device for the deaf (TTY–TDD) may use our web chat for alternative communication *www.NationalService.gov/contact-us.*

Comments submitted in response to this notice may be made available to the public through *regulations.gov*. For this reason, please do not include in your comments information of a confidential nature, such as sensitive personal information or proprietary information. If you send an email comment, your email address will be automatically captured and included as part of the comment that is placed in the public docket and made available on the internet. Please note that responses to this public comment request containing any routine notice about the confidentiality of the communication will be treated as public comment that may be made available to the public, notwithstanding the inclusion of the routine notice.

FOR FURTHER INFORMATION CONTACT: Nahid Jarrett, 202–606–6753, or by email at *njarrett@cns.gov.*

SUPPLEMENTARY INFORMATION:

Title of Collection: National Service Trust AmeriCorps Voucher and Payment Request Form/National Service Trust AmeriCorps—Manual Payment Request Form.

OMB Control Number: 3045–0014.

Type of Review: Renewal.

Respondents/Affected Public: Individuals and Households OR Businesses and Organizations OR State, Local or Tribal Governments.

Total Estimated Number of Annual Responses: 45,000.

Total Estimated Number of Annual Burden Hours: 3,750.

Abstract: CNCS seeks to renew the current information collection request. The *National Service Trust AmeriCorps Voucher and Payment Form/National Service Trust AmeriCorps—Manual Payment Request Form;* is used to make payments to repay qualified student loans and to pay for the cost of attending eligible post-secondary educational institutions and approved School-to-Work programs. Prior to making the payments, CNCS will review information from the forms and compare it to information taken from the AmeriCorps members' education award account(s) to ensure that the payments meet the requirements of the law. This information collection is not required to be considered for obtaining grant funding support.

The currently approved information collection is due to expire on August 31, 2019.

Comments submitted in response to this notice will be summarized and/or included in the request for OMB approval. Comments are invited on: (a) Whether the collection of information is necessary for the proper performance of the functions of the agency, including whether the information shall have practical utility; (b) the accuracy of the agency's estimate of the burden of the collection of information; (c) ways to enhance the quality, utility, and clarity of the information to be collected; (d) ways to minimize the burden of the collection of information on respondents, including through the use of automated collection techniques or other forms of information technology; and (e) estimates of capital or start-up costs and costs of operation, maintenance, and purchase of services to provide information. Burden means the total time, effort, or financial resources expended by persons to generate, maintain, retain, disclose or provide information to or for a Federal

agency. This includes the time needed to review instructions; to develop, acquire, install and utilize technology and systems for the purpose of collecting, validating and verifying information, processing and maintaining information, and disclosing and providing information; to train personnel and to be able to respond to a collection of information, to search data sources, to complete and review the collection of information; and to transmit or otherwise disclose the information. All written comments will be available for public inspection on regulations.gov.

Dated: June 3, 2019.

Jerry Prentice,

Director of the National Service Trust.

[FR Doc. 2019–12790 Filed 6–17–19; 8:45 am]

BILLING CODE 6050–28–P

DEPARTMENT OF DEFENSE

Defense Acquisition Regulations System

[Docket No. DARS–2018–0008; OMB 0704–0574]

Information Collection Requirement; Defense Federal Acquisition Regulation Supplement; Submission for OMB Review; Comment Request

AGENCY: Defense Acquisition Regulation System, Department of Defense (DoD).

ACTION: Notice.

SUMMARY: The Defense Acquisition Regulations System has submitted to OMB for clearance, the following proposal for collection of information under the provisions of the Paperwork Reduction Act.

DATES: Consideration will be given to all comments received by July 18, 2019.

Title, Associated Forms, and OMB Number: Defense Federal Acquisition Regulation Supplement (DFARS) Part 215; Only One Offer and Related Clauses at 252.215; OMB Control Number 0704–0574.

Type of Request: New Collection.

Number of Respondents: 2,079.

Responses per Respondent: Approximately 1.73.

Annual Responses: 3,593.

Average Burden per Response: Approximately 37.7 hours.

Annual Burden Hours: 135,330.

Needs and Uses: This notice is for a new information collection for DFARS proposed rule 2017–D009, Only One Offer, that DoD published in the **Federal Register** at 83 FR 30656 on June 29, 2018. This information collection pertains to information that an offeror/contractor must submit to DoD if only one offer was received in response to a competitive solicitation, and the contracting officer must now request certified cost or pricing data, because of the revised standard for adequate price competition that is applicable to DoD, NASA, and the Coast Guard. This information collection requirement implements Cost or Pricing Data—Truth in negotiations, 10 U.S.C. 2306a, as amended by section 822 of the National Defense Authorization Act (NDAA) for Fiscal Year (FY) 2017 (Pub. L. 114–328). To the extent that 10 U.S.C. 23906a is the same as 41 U.S.C. chapter 35, information collection requirements are covered under OMB clearance 9000–0013. However, section 822 of the NDAA for FY 2017 changes the standard for adequate price competition for DoD, NASA, and the Coast Guard. This supporting statement addresses only the additional burden for DoD, as implemented in DFARS provisions 252.215–7008, Only One Offer; and 252.215–7010, Requirements for Certified Cost or Pricing Data and Data Other Than Certified Cost or Pricing Data. The information obtained through DFARS 252.215–7008, Only One Offer, and 252.215–7010, Requirements for Certified Cost or Pricing Data and Data Other Than Certified Cost or Pricing Data, is used to determine whether the offered price is fair and reasonable and to meet the statutory requirement for certified cost or pricing data.

Affected Public: Businesses or other for-profit and not-for- profit institutions.

Frequency: On occasion.

Respondent's Obligation: Required to obtain or maintain benefits.

OMB Desk Officer: Ms. Jasmeet Seehra.

Written comments and recommendations on the proposed information collection should be sent to Ms. Seehra at the Office of Management and Budget, Desk Officer for DoD, Room 10236, New Executive Office Building, Washington, DC 20503.

You may also submit comments, identified by docket number and title, by the following method:

- *Federal eRulemaking Portal: http://www.regulations.gov.* Follow the instructions for submitting comments.

DoD Clearance Officer: Ms. Angela James.

Requests for copies of the information collection proposal should be sent to Ms. James at *whs.mc-alex.esd.mbx.dd-dod-information-collections@mail.mil.*

Jennifer Lee Hawes,

Regulatory Control Officer, Defense Acquisition Regulations System.

[FR Doc. 2019–12881 Filed 6–17–19; 8:45 am]

BILLING CODE 5001–06–P

DEPARTMENT OF DEFENSE

Office of the Secretary

[Transmittal No. 19–32]

Arms Sales Notification

AGENCY: Defense Security Cooperation Agency, Department of Defense.

ACTION: Arms sales notice.

SUMMARY: The Department of Defense is publishing the unclassified text of an arms sales notification.

FOR FURTHER INFORMATION CONTACT: Karma Job at *karma.d.job.civ@mail.mil* or (703) 697–8976.

SUPPLEMENTARY INFORMATION: This 36(b)(1) arms sales notification is published to fulfill the requirements of section 155 of Public Law 104–164 dated July 21, 1996. The following is a copy of a letter to the Speaker of the House of Representatives, Transmittal 19–32 with attached Policy Justification and Sensitivity of Technology.

Dated: June 12, 2019.

Aaron T. Siegel,

Alternate OSD Federal Register Liaison Officer, Department of Defense.

BILLING CODE 5001–06–P

DEFENSE SECURITY COOPERATION AGENCY
201 12TH STREET SOUTH, STE 203
ARLINGTON VA 22202-5408

MAY 1 5 2019

The Honorable Nancy Pelosi
Speaker of the House
U.S. House of Representatives
H-209, The Capitol
Washington, DC 20515

Dear Madam Speaker:

Pursuant to the reporting requirements of Section 36(b)(1) of the Arms Export Control Act, as amended, we are forwarding herewith Transmittal No. 19-32 concerning the Navy's proposed Letter(s) of Offer and Acceptance to the Government of Canada for defense articles and services estimated to cost $387 million. After this letter is delivered to your office, we plan to issue a news release to notify the public of this proposed sale.

Sincerely,

Charles W. Hooper
Lieutenant General, USA
Director

Enclosures:
1. Transmittal
2. Policy Justification
3. Sensitivity of Technology

BILLING CODE 5001–06–C

Transmittal No. 19-32

Notice of Proposed Issuance of Letter of Offer Pursuant to Section 36(b)(1) of the Arms Export Control Act, as amended

(i) *Prospective Purchaser*: Government of Canada

(ii) *Total Estimated Value*:

Major Defense Equipment* ..	$288 million
Other	$ 99 million
TOTAL	$387 million

(iii) *Description and Quantity or Quantities of Articles or Services under Consideration for Purchase*:

Major Defense Equipment (MDE): Four hundred twenty-five (425) MK 54 Lightweight Torpedo Conversion Kits

Non-MDE: Also included are torpedo containers, Recoverable Exercise Torpedoes (REXTORP) with containers, Fleet Exercise Section (FES) and fuel tanks, air launch accessories for fixed wing, torpedo spare parts, training, publications, support and test equipment, U.S. Government and contractor engineering, technical, and logistics support services, and other related elements of logistics and program support.

(iv) *Military Department*: Navy (CN-P-AMP)

(v) *Prior Related Cases, if any*: CN-P-APR

(vi) *Sales Commission, Fee, etc., Paid, Offered, or Agreed to be Paid*: None

(vii) *Sensitivity of Technology Contained in the Defense Article or Defense Services Proposed to be Sold*: See Attached Annex.

(viii) *Date Report Delivered to Congress*: May 16, 2019

*As defined in Section 47(6) of the Arms Export Control Act.

POLICY JUSTIFICATION

Canada — MK 54 Lightweight Torpedoes

The Government of Canada has requested to buy four hundred twenty-five (425) MK 54 lightweight torpedo conversion kits. Also included are torpedo containers, Recoverable Exercise Torpedoes (REXTORP) with containers, Fleet Exercise Section (FES) and fuel tanks, air launch accessories for fixed wing, torpedo spare parts, training, publications, support and test equipment, U.S. Government and contractor engineering, technical, and logistics support services, and other related elements of logistics and program support. The total estimated program cost is $387 million.

This proposed sale will support the foreign policy and national security objectives of the United States by helping to improve the military capability of Canada, a NATO ally that is an important force for ensuring political stability and economic progress and a contributor to military, peacekeeping and humanitarian operations around the world.

Canada intends to upgrade its current inventory of MK 46 torpedoes to the MK 54 with the purchase of these kits. The MK 54 torpedo is designed to be easily upgraded from the existing MK 46

torpedo. Canada plans to utilize MK 54 Lightweight Torpedoes on its Royal Canadian Navy's Halifax class ships, the Royal Canadian Air Force's CP-140 Aurora Aircraft, and the CH-148 Maritime Helicopters. Canada will have no difficulty absorbing this equipment into its armed forces.

The proposed sale of this equipment and support will not alter the basic military balance in the region.

The principal contractor for the MK 54 Torpedo is Raytheon Integrated Defense Systems, Portsmouth, Rhode Island. The Government of Canada is expected to negotiate an offset agreement with Raytheon, in accordance with Canada's Industrial and Technological Benefits (ITB) Policy, before signing the Letter of Offer and Acceptance (LOA).

Implementation of this proposed sale will not require the assignment of additional U.S. Government or contractor representatives to Canada. However, it is anticipated that engineering and technical support services provided by the U.S. Government may be required on an interim basis for training and technical assistance.

There will be no adverse impact on U.S. defense readiness as a result of this proposed sale.

Transmittal No. 19-32

Notice of Proposed Issuance of Letter of Offer Pursuant to Section 36(b)(1) of the Arms Export Control Act

Annex

Item No. vii

(vii) *Sensitivity of Technology*:

1. The MK 54 Torpedo is a conventional torpedo that can be launched from surface ships, and rotary and fixed wing aircraft. The MK 54 is an upgrade to the MK 46 Torpedo. The upgrade to the MK 54 entails replacement of the torpedo's sonar and guidance and control systems with modern technology. The new guidance and control system uses a mixture of commercial-off-the-shelf and custom-built electronics. The warhead, fuel tank and propulsion system from the MK 46 torpedo are re-used in the MK 54 configuration with minor modifications. There is no sensitive technology in the MK 54 or its support and test equipment. The assembled MK 54 torpedo and several of its individual components are classified CONFIDENTIAL. The MK 54 operational software is classified as SECRET. Canada has not requested nor will it be provided with the source code for the MK 54 operational software.

2. If a technologically advanced adversary were to obtain knowledge of the specific hardware and software elements, the information could be used to develop countermeasures or equivalent systems which might reduce weapon system effectiveness or be used in the development of a system with similar or advanced capabilities.

3. A determination has been made that Canada can provide substantially the same degree of protection for the technology being released as the U.S. Government. This sale supports the U.S. foreign policy and national security objectives as outlined in the Policy Justification.

4. All defense articles and services listed in this transmittal have been authorized for release and export to Canada.

[FR Doc. 2019–12777 Filed 6–17–19; 8:45 am]

BILLING CODE 5001–06–P

DEPARTMENT OF DEFENSE

Office of the Secretary

[Transmittal No. 19–36]

Arms Sales Notification

AGENCY: Defense Security Cooperation Agency, Department of Defense.

ACTION: Arms sales notice.

SUMMARY: The Department of Defense is publishing the unclassified text of an arms sales notification.

FOR FURTHER INFORMATION CONTACT: Karma Job at *karma.d.job.civ@mail.mil* or (703) 697–8976.

SUPPLEMENTARY INFORMATION: This 36(b)(1) arms sales notification is published to fulfill the requirements of section 155 of Public Law 104–164 dated July 21, 1996. The following is a copy of a letter to the Speaker of the House of Representatives, Transmittal 19–36 with attached Policy Justification and Sensitivity of Technology.

Dated: June 12, 2019.

Aaron T. Siegel,

Alternate OSD Federal Register Liaison Officer, Department of Defense.

BILLING CODE 5001–06–P

DEFENSE SECURITY COOPERATION AGENCY
201 12TH STREET SOUTH, STE 203
ARLINGTON, VA 22202-5408

MAY 3 0 2019

The Honorable Nancy Pelosi
Speaker of the House
U.S. House of Representatives
H-209, The Capitol
Washington, DC 20515

Dear Madam Speaker:

Pursuant to the reporting requirements of Section 36(b)(1) of the Arms Export Control Act, as amended, we are forwarding herewith Transmittal No. 19-36 concerning the Air Force's proposed Letter(s) of Offer and Acceptance to the Government of Bulgaria for defense articles and services estimated to cost $1.673 billion. After this letter is delivered to your office, we plan to issue a news release to notify the public of this proposed sale.

Sincerely,

Charles W. Hooper
Lieutenant General, USA
Director

Enclosures:
1. Transmittal
2. Policy Justification
3. Sensitivity of Technology

BILLING CODE 5001–06–C

Transmittal No. 19-36

Notice of Proposed Issuance of Letter of Offer Pursuant to Section 36(b)(1) of the Arms Export Control Act, as amended

(i) *Prospective Purchaser*: Government of Bulgaria

(ii) *Total Estimated Value*:

Major Defense Equipment *	$ .763 billion
Other	$ .910 billion
TOTAL	$1.673 billion

(iii) *Description and Quantity or Quantities of Articles or Services under Consideration for Purchase:*

Major Defense Equipment (MDE):
- Eight (8) F–16C/D Block 70/72 Aircraft
- Ten (10) F110 General Electric Engines (includes 2 spares)
- Ten (10) Link-16 Multifunctional Information Distribution Systems—JTRS (MIDS–JTRS) (includes 2 spares)
- Nine (9) Improved Program Display Generators (iPDG) (includes 1 spare)
- Nine (9) APG–83 Active Electronically Scanned Array (AESA) Radars (includes 1 spare)
- Four (4) AN/AAQ–33 SNIPER Targeting Pods
- Nine (9) Modular Mission Computers (MMC) 7000AH (includes 1 spare)
- Nine (9) LN–260 Embedded GPS/INS (EGI)
- Nine (9) M61 Vulcan 20mm Cannons
- Sixteen (16) AIM–120C7 Advanced Medium Range Air-to-Air Missiles (AMRAAMs)
- One (1) AIM–120C7 Spare Guidance Section
- Twenty-four (24) AIM–9X Sidewinder Missiles
- Eight (8) AIM–9X Captive Air Training Missiles (CATM)
- Four (4) AIM–9X Spare Tactical Guidance Sections
- Four (4) AIM–9X Spare CATM Guidance Sections
- Forty-eight (48) LAU–129 Multi-Purpose Launchers
- Fifteen (15) GBU–49 Enhanced Paveway II Kits
- Fifteen (15) GBU–54 Laser JDAM Kits
- Twenty-eight (28) GBU–39 Small Diameter Bombs (SDB–1)
- Twenty-four (24) FMU–152 Fuzes
- Twenty-four (24) MK82 Bombs (Tritonal)
- Six (6) MK82 Bombs (Inert)
- Thirteen (13) MAU–210 Enhanced Computer Control Group (ECCG)

Non-MDE: Also included are nine (9) AN/ALQ-211 Internal Advanced Integrated Defensive Electronic Warfare Suites (including 1 spare); nine (9) AN/ALE-47 Countermeasure Dispensers (including 1 spare); 4,140 Infrared Flare countermeasures, with impulse cartridges; 8,250 each of PGU-27A/B 20mm training and combat munitions; thirty-six (36) MK-124 Signal/Smoke Illumination devices; nine (9) APX-126 Advanced Identification Friend or Foe

(AIFF) units with Secure Communications and Cryptographic Appliques; eighteen (18) AN/ARC-238 UHF/VHF SATURN Radios; sixteen (16) AIM-120C AMRAAM training CATMs; Joint Mission Planning System (JMPS) with software, training and support; twenty (20) Joint Helmet Mounted Cueing System (JHMCS) II with Night Vision Goggle compatibility; ten (10) Night Vision Devices; two (2) Remote Operated Video Enhanced Receiver (ROVER) 6i units, plus 1 ground station; ground training device (flight and maintenance simulator); one (1) Avionics I-level Test Station; Electronic Combat International Security Assistance Program (ECISAP) support; Cartridge Actuated and Propellant Actuated Devices (CAD/PAD) support; Common Munitions Bit-test Reprogramming Equipment (CMBRE) support with Computer Test Set Adapter Group; communications equipment; software delivery and support; facilities and construction support; spares and repair/replace parts; personnel training and training equipment; publications and technical documentation; containers; munition support and test equipment; aircraft and munition integration and test support; studies and surveys; U.S. Government and contractor technical, engineering and logistical support services; and other related elements of logistics and program support.

(iv) *Military Department*:

Air Force (BU-D-SAB, BU-D-AAA)
Navy (BU-P-AAD, BU-P-LAR)

(v) *Prior Related Cases, if any*: None

(vi) *Sales Commission, Fee, etc., Paid, Offered, or Agreed to be Paid*: None

(vii) *Sensitivity of Technology Contained in the Defense Article or Defense Services Proposed to be Sold*: See Attached Annex

(viii) *Date Report Delivered to Congress*: May 30, 2019

* As defined in Section 47(6) of the Arms Export Control Act.

POLICY JUSTIFICATION

Bulgaria—F-16 Block 70/72 New Purchase

The Government of Bulgaria has requested to buy eight (8) F-16 C/D Block 70/72 aircraft; ten (10) F110 General Electric engines (includes 2 spares); ten (10) Link-16 Multi-Functional Information Distribution System (MIDS)—JTRS (MIDS-JTRS) (includes 2 spares); nine (9) Improved Program Display Generators (iPDG) (includes 1 spare); nine (9) AN/APG-83 Active Electronically Scanned Array (AESA) Radars (includes 1 spare); four (4) AN/AAQ-33 SNIPER Targeting Pods; nine (9) Modular Mission Computers (MMC) 7000AH (includes 1 spare); nine (9) LN-260 Embedded GPS/INS (EGI); nine (9) M61 Vulcan 20mm Cannons; sixteen (16) AIM-120C7 Advanced Medium Range Air-to-Air Missiles (AMRAAMs); one AIM-120C7 Spare Guidance Section; twenty-four (24) AIM-9X Sidewinder Missiles; eight (8) AIM-9X Captive Air Training Missiles (CATM); four (4) AIM-9X Spare Tactical Guidance Sections; four (4) AIM-9X Spare CATM Guidance Sections; forty-eight (48) LAU-129 Multi-Purpose Launchers; fifteen (15) GBU-49 Enhanced Paveway II Kits; fifteen (15) GBU-54 Laser JDAM Kits; twenty-eight (28) GBU-39 Small Diameter Bombs (SDB-1); twenty-four (24) FMU-152 Fuzes; twenty-four (24) MK-82 Bombs (Tritonal); six (6) MK82 Bombs (Inert); and thirteen (13) MAU-210 Enhanced Computer Control Group (ECCG). Also included are nine (9) AN/ALQ-211 Internal Advanced Integrated Defensive Electronic Warfare Suites (including 1 spare); nine (9) AN/ALE-47 Countermeasure Dispensers (including 1 spare); 4,140 Infrared Flare countermeasures, with impulse cartridges; 8,250 each of PGU-27A/B 20mm training and combat munitions; thirty-six (36) MK-124 Signal/Smoke Illumination devices; nine (9) APX-126 Advanced Identification Friend or Foe (AIFF) units with Secure Communications and Cryptographic Appliques; eighteen (18) AN/ARC-238 UHF/VHF SATURN Radios; sixteen (16) AIM-120C AMRAAM training CATMs; Joint Mission Planning System (JMPS) with software, training and support; twenty (20) Joint Helmet Mounted Cueing System (JHMCS) II with Night Vision Goggle compatibility; ten (10) Night Vision Devices; two (2) Remote Operated Video Enhanced Receiver (ROVER) 6i units, plus 1 ground station; ground training device (flight and maintenance simulator); one (1) Avionics I-level Test Station; Electronic Combat International Security Assistance Program (ECISAP) support; Cartridge Actuated and Propellant Actuated Devices (CAD/PAD) support; Common Munitions Bit-test Reprogramming Equipment (CMBRE) support with Computer Test Set Adapter Group; communications equipment; software delivery and support; facilities and construction support; spares and repair/replace parts; personnel training and training equipment; publications and technical documentation; containers; munition support and test equipment; aircraft and munition integration and test support; studies and surveys; U.S. Government and contractor technical, engineering and logistical support services; and other related elements of logistics and program support. The estimated cost is $1.673 billion.

The proposed sale will contribute to the foreign policy and national security of the United States by helping to improve security of a NATO ally and a key democratic partner of the United States in ensuring peace and stability in this region.

The proposed sale will contribute to Bulgaria's capability to provide for the defense of its airspace, regional security, and interoperability with the United States and NATO. These aircraft will provide Bulgaria with a fleet of modernized multi-role combat aircraft, ensuring that Bulgaria can effectively operate in hazardous areas and enhancing the Bulgarian Air Force's interoperability with U.S. as well as NATO forces. Bulgaria currently relies on the United States and the United Kingdom to participate in joint air policing. By acquiring these F-16s and the associated sustainment and training package, Bulgaria will be able to provide for the defense of its own airspace and borders. Bulgaria will have no difficulty absorbing this aircraft and services into its armed forces.

The proposed sale of this equipment will not alter the basic military balance in the region.

The prime contractor will be Lockheed Corporation, Bethesda, Maryland. There are no known offset agreements proposed in connection with this potential sale.

Implementation of this proposed sale will not require the assignment of any additional U.S. Government or contractor representatives to Bulgaria.

There will be no adverse impact on U.S. defense readiness as a result of this proposed sale.

Transmittal No. 19-36

Notice of Proposed Issuance of Letter of Offer Pursuant to Section 36(b)(1) of the Arms Export Control Act

Annex

Item No. vii

(vii) *Sensitivity of Technology*:

1. This sale will involve the release of sensitive technology to Bulgaria. The F-16C/D Block 70/72 weapon system is unclassified, except as noted below. The aircraft utilizes the F-16 airframe and features advanced avionics and systems. It will contain the General Electric F110-129D engine, AN/APG-83 radar, digital flight control system, embedded internal global navigation system, Joint Helmet Mounted Cueing Systems (JHMCS II) with night vision

compatibility, internal and external electronic warfare equipment, Advanced IFF, LINK-16 datalink, operational flight trainer, and software computer systems.

2. Sensitive and/or classified (up to SECRET) elements of the proposed F-16 include hardware, accessories, components, and associated software: LINK-16 (MIDS-JTRS) with TACAN and ESHI Terminals, Multi-purpose Launcher (LAU-129), Internal AN/ALQ-211 EW Management Systems, Advanced Identification Friend or Foe (AIFF), Cryptographic Appliques (KIV-78), Dual-band ARC-238 UHF/VHF Radios, KY-58M COMSEC Secure Voice Processors, Joint Mission Planning System, F-16 Flight Simulator, Avionics I-level Test Station, and SNIPER AN/AAQ-33 Targeting Pods. Additional sensitive areas include operating manuals, maintenance technical orders containing performance information, operating and test procedures, and other information related to support operations and repair. The hardware, software and data identified are classified to protect vulnerabilities, design and performance parameters and other similar critical information.

3. The AN/APG-83 radar is an Active Electronically Scanned Array (AESA) upgrade on the F-16. It includes higher processor power, higher transmission power, more sensitive receiver electronics, and Synthetic Aperture Radar (SAR), which creates higher resolution ground maps from a greater distance than existing mechanically scanned array radars (e.g., APG-68). The upgrade features an increase in detection range of air targets, increase in processing speed and memory, in addition to significant improvement in all operating modes. The highest classification of the radar is SECRET.

4. The Multifunctional Information Distribution System-Low Volume Terminal (MIDS–LVT) is an advanced Link-16 command, control, communications, and intelligence (C3I) system incorporating high-capacity, jam-resistant, digital communication links for exchange of near real-time tactical information, including both data and voice, among air, ground, and sea elements. MIDS-LVT is intended to support key theater functions such as surveillance, identification, air control, weapons engagement coordination, and direction for all services and allied forces. The system will provide jamming-resistant, wide-area communications on a Link-16 network among MIDS and Joint Tactical Information Distribution System (JTIDS) equipped platforms. The MIDS/LVT and MIDS On Ship Terminal hardware, publications, performance specifications, operational capability, parameters, vulnerabilities to countermeasures, and software documentation are classified CONFIDENTIAL. The classified information to be provided consists of that which is necessary for the operation, maintenance, and repair (through intermediate level) of the data link terminal, installed systems, and related software. Group A provision only will be transferred initially.

5. EGI LN-260: The Embedded GPS INS (EGI) LN-260 is a sensor that combines GPS and inertial sensor inputs to provide accurate location information for navigation and targeting. The EGI LN-260 is UNCLASSIFIED. The GPS crypto variable keys needed for highest GPS accuracy are classified up to SECRET.

6. The Modular Mission Computer (MMC) is the central aircraft computer of the F-16. It serves as the hub for all aircraft subsystems and avionics data transfer. The hardware and software are classified SECRET.

7. The Improved Programmable Display Generator (iPDG) and color multifunction displays utilize ruggedized commercial liquid crystal display technology that is designed to withstand the harsh environment found in modern fighter cockpits. The display generator is the fifth generation graphics processor for the F-16. Through the use of state-of-the-art microprocessors and graphics engines, it provided orders of magnitude increases in throughput, memory, and graphics capabilities. The hardware and software are UNCLASSIFIED.

8. The SNIPER (AN/AAQ-33) targeting system is UNCLASSIFIED and contains technology representing the latest state-of-the-art in electro-optical clarity and haze, and low light targeting capability. Information on performance and inherent vulnerabilities is classified SECRET. Software (object code) is classified CONFIDENTIAL. Overall system classification is SECRET.

9. The M61 20mm Vulcan Cannon is a six barreled automatic cannon chambered in 20x120mm with a cyclic rate of fire from 2,500–6,000 shots per minute. This weapon is a hydraulically powered air cooled Gatling gun used to damage/destroy aerial targets, suppress/incapacitate personnel targets and damage or destroy moving and stationary light materiel targets. The M61 and its components are UNCLASSIFIED.

10. The AIM-9X Block II SIDEWINDER Tactical Missile includes the following advanced technology: Active Optical Target Detector (AOTD), Gyro Optics Assembly within the Guidance Control Section (GCS), Infrared Countermeasures (IRCM), Detection and Rejection Circuitry, digital ignition safety, a reduced smoke rocket motor and a weapons datalink to support beyond visual range engagements. The equipment/hardware, software, and maintenance are classified CONFIDENTIAL. Manuals and technical documents are classified SECRET. Performance and operating information is classified SECRET.

11. The LAU-129 Guided Missile Launcher is capable of launching the AIM-9 family of missile or AIM-120 Advanced Medium Range Air-to-Air Missile (AMRAAM). The LAU-129 launcher provides mechanical and electrical interface between missile and aircraft. There are five versions produced strictly for foreign military sales. The only difference between these launchers is the material they are coated with or the color of the coating.

12. The AIM-120C7 AMRAAM is a radar-guided missile featuring digital technology and micro-miniature solid-state electronics. The AMRAAM capabilities include look-down/shoot down, multiple launches against multiple targets, resistance to electronic countermeasures, and interception of high- and low-flying and maneuvering targets. The AMRAAM All Up Round (AUR) is classified CONFIDENTIAL, major components and subsystems range from UNCLASSIFIED to CONFIDENTIAL, and technical data and other documentation are classified up to SECRET.

13. Joint Direct Attack Munitions (JDAM) (General Overview) is a Joint Service weapon which uses an onboard GPS-aided Inertial Navigation System (INS) Guidance Set with a MK 82, MK 83, MK 84, BLU-109, BLU-110, BLU-111, BLU-117, BLU-126 (Navy) or BLU-129 warhead. The Guidance Set, when combined with a warhead and appropriate fuze, and tail kit forms a JDAM Guided Bomb Unit (GBU). The JDAM Guidance Set gives these bombs adverse weather capability with improved accuracy. The tail kit contains an Inertial Navigation System (INS) guidance/Global Positioning System (GPS) guidance to provide highly accurate weapon delivery in any ''flyable'' weather. The INS, using updates from the GPS, helps guide the bomb to the target via the use of movable tail fins. The JDAM weapon can be delivered from modest standoff ranges at high or low altitudes against a variety of land and surface targets during the day or night. After release, JDAM autonomously guides to a target, using the resident GPS-aided INS

guidance system. JDAM is capable of receiving target coordinates via preplanned mission data from the delivery aircraft, by onboard aircraft sensors (i.e. FLIR, Radar, etc.) during captive carry, or from & third party source via manual or automated aircrew cockpit entry. The JDAM as an All Up Round is SECRET; technical data for JDAM is classified up to SECRET.

14. GBU-54/56 (LJDAM) are 500 pound and 2,000 pound JDAM respectively, which incorporate all the capabilities of the JDAM and add a precision laser guidance set. The Laser—JDAM (LJDAM) gives the weapon system an optional semi-active laser guidance in addition to the correct GPS/INS guidance, which allows for striking moving targets. The LJDAM AUR and all of its components are SECRET; technical data for JDAM is classified up to SECRET. The GBU-54/56 contain a GPS Receiver Card with Selective Availability Anti-Spoofing Module (SAASM).

15. GBU-49 and GBU-50 Enhanced Paveway II (EP II) are 500lbs/2000lbs dual mode laser and GPS guided munitions respectively. The EP II works together with an embedded MAU-210 Enhanced Computer Control Group (ECCG) to guide the warhead to its laser-designated target. Information revealing target designation tactics and associated aircraft maneuvers, the probability of destroying specific/peculiar targets, vulnerabilities regarding countermeasures and the electromagnetic environment is classified SECRET. Information revealing the probability of destroying common/unspecified targets, the number of simultaneous lasers the laser seeker head can discriminate, and data on the radar/infrared frequency is classified CONFIDENTIAL.

16. The Guided Bomb Unit-39 (GBU-39/B) small diameter bomb (SDB) is a 250-lb class precision guided munition that is intended to provide aircraft with an ability to carry a high number of bombs. The weapon offers day or night, adverse weather, precision engagement capability against pre-planned, fixed, or stationary soft, non-hardened, and hardened targets, and provides greater than 50 NM standoff range. Aircraft are able to carry four SDBs in place of one 2,000-lb bomb. The SDB is equipped with a GPS-aided inertial navigation system to attack fixed/stationary targets such as fuel depots and bunkers. The SDB and all of its components are SECRET; technical data is classified up to SECRET.

17. Joint Programmable Fuze (JPF) FMU-152 is a multi-delay, multi-arm and proximity sensor compatible with general purpose blast, frag and hardened-target penetrator weapons. The JPF settings are cockpit selectable in flight when used with JDAM weapons.

18. Mk-82 General Purpose (GP) bomb is a 500 pound, free-fall, unguided, low-drag weapon. The Mk-82 is designed for soft, fragment sensitive targets and is not intended for hard targets or penetrations. The explosive filling is usually tritonal, though other compositions have sometimes been used. The overall classification of the weapon is UNCLASSIFIED.

19. Third generation aviation Night Vision Goggles (NVGs) offer high resolution, high gain, and photo response to near infrared light sources. Helmet mount configurations are designed for fixed and rotary-wing applications. Hardware is UNCLASSIFIED, and technical data and documentation to be provided are UNCLASSIFIED.

20. If a technologically advanced adversary were to obtain knowledge of the specific hardware and software elements, the information could be used to develop countermeasures that might reduce weapon system effectiveness or be used in the development of a system with similar or advanced capabilities.

21. A determination has been made that Bulgaria can provide substantially the same degree of protection for the sensitive technology being released as the U.S. Government. This sale is necessary in furtherance of the U.S. foreign policy and national security objectives outlined in the Policy Justification.

22. All defense articles and services listed in this transmittal are authorized for release and export to the Government of Bulgaria.

[FR Doc. 2019–12780 Filed 6–17–19; 8:45 am]

BILLING CODE 5001–06–P

DEPARTMENT OF ENERGY

International Energy Agency Meetings

AGENCY: Department of Energy.

ACTION: Notice of meetings.

SUMMARY: The Industry Advisory Board (IAB) to the International Energy Agency (IEA) will meet on June 26–27, 2019, at the French Ministry of Foreign Affairs, 27 rue de la Convention, 75015 Paris, France, in connection with a joint meeting of the IEA's Standing Group on Emergency Questions (SEQ) and the IEA's Standing Group on the Oil Market (SOM) which is scheduled at the same time.

DATES: June 26–27, 2019.

ADDRESSES: French Ministry of Foreign Affairs Building (Centre de Conférence Ministériel), 27 rue de la Convention, 75015 Paris, France.

FOR FURTHER INFORMATION CONTACT: Thomas Reilly, Assistant General Counsel for International and National Security Programs, Department of Energy, 1000 Independence Avenue SW, Washington, DC 20585, 202–586–5000.

SUPPLEMENTARY INFORMATION: In accordance with section 252(c)(1)(A)(i) of the Energy Policy and Conservation Act (42 U.S.C. 6272(c)(1)(A)(i)) (EPCA), the following notice of meetings is provided:

A meeting of the Industry Advisory Board (IAB) to the International Energy Agency (IEA) will be held at the French Ministry of Foreign Affairs Building (Centre de Conférence Ministériel), 27 rue de la Convention, 75015 Paris, France, commencing at 9:15 a.m. on June 27, 2019. The purpose of this notice is to permit attendance by representatives of U.S. company members of the IAB at a meeting of the IEA's Standing Group on Emergency Questions (SEQ), which is scheduled to be held at the same location and time. The IAB will also hold a preparatory meeting among company representatives at the same location at 9:30 a.m. on June 27. The agenda for this preparatory meeting is to review the agenda for the SEQ meeting.

The agenda of the meeting is under the control of the SEQ and the SOM. It is expected that the SEQ and the SOM will adopt the following agenda:

Closed SEQ Session—IEA Member Countries Only

1. Adoption of the Agenda
2. Approval of the Summary Record of the 157th Meeting
3. Status of Compliance with IEP Agreement Stockholding Obligations
4. Update on the Ministerial Mandate

Open SEQ Session—open to Association Countries

5. Update on Contaminated Russian oil—Druzhba incident
6. Mid-term Review of the Netherlands
7. EU—Cybersecurity
8. Industry Advisory Board Update
9. Emergency Response Review—Estonia
10. Mid-term Review of France
11. Outreach
12. Oral Reports by Administrations
13. Any Other Business

Schedule of SEQ & SOM Meetings 2019 & 2020

—22–24 October 2019

—24–26 March 2020

—23–25 June 2020
—17–19 November 20120

A meeting of the Industry Advisory Board (IAB) to the International Energy Agency (IEA) will be held at the French Ministry of Foreign Affairs, 27 rue de la Convention, 75015 Paris, France, on June 26, 2019, commencing at 09:15 a.m. The purpose of this notice is to permit attendance by representatives of U.S. company members of the IAB at a joint meeting of the IEA's Standing Group on Emergency Questions (SEQ) and the IEA's Standing Group on the Oil Market (SOM), which is scheduled to be held at the same location and time. The agenda of the SEQ meeting is under the control of the SEQ. It is expected that the SEQ will adopt the following agenda:

Start meeting/Introduction
1. Adoption of the Agenda
2. Approval of Summary Record of 21 March 2019
3. Reports on Recent Oil Market and Policy Developments in IEA Countries
4. Update on the Current Oil Market Situation: followed by Q&A
5. Special session: ''Focus on China''
   —Secretariat presentation: ''Economic, technology and political perspectives on Chinese oil demand''
   — Sinopec presentation: ''Medium-Term Outlook for Chinese demand''
6. Special session: ''Future of oil demand''
   —Secretariat presentation on Global Electric Vehicle Outlook 2019
   —Secretariat presentation on vehicle efficiency improvements
   —Member countries/IAB contributions: (TBC)
7. Presentation: ''World Energy Investment 2019'' followed by Q&A
8. Presentation: ''Gas 2019'' followed by Q&A
9. Other Business
   —Tentative schedule of the next SOM meeting: 22–24 October 2019, Location TBC

Concluding Remarks

As provided in section 252(c)(1)(A)(ii) of the Energy Policy and Conservation Act (42 U.S.C. 6272(c)(1)(A)(ii)), the meetings of the IAB are open to representatives of members of the IAB and their counsel; representatives of members of the IEA's Standing Group on Emergency Questions and the IEA's Standing Group on the Oil Markets; representatives of the Departments of Energy, Justice, and State, the Federal Trade Commission, the General Accounting Office, Committees of Congress, the IEA, and the European Commission; and invitees of the IAB, the SEQ, the SOM, or the IEA.

Issued in Washington, DC, June 12, 2019.

Thomas Reilly,

Assistant General Counsel for International and National Security Programs.

[FR Doc. 2019–12870 Filed 6–17–19; 8:45 am]

BILLING CODE 6450–01–P

DEPARTMENT OF ENERGY

Federal Energy Regulatory Commission

[Docket No. EL19–80–000]

Kansas Corporation Commission v. ITC Great Plains, LLC; Notice of Complaint

Take notice that on June 11, 2019, pursuant to sections 206, 306 and 309 of the Federal Power Act 16 U.S.C. 824e, 825e and 825h and Rule 206 of the Federal Energy Regulatory Commission's (Commission) Rules of Practice and Procedure, 18 CFR 385.206, Kansas Corporation Commission (KCC or Complainant) filed a formal complaint against ITC Great Plains, LLC (Respondent) asserting that KCC's rates are unjust and unreasonable as a result of Respondent's use of an excessive 100 basis point incentive adder to calculate its return on equity, all as more fully explained in the complaint.

KCC certifies that copies of the Complaint were served on the contacts for ITC Great Plains, LLC as listed on the Commission's list of Corporate Officials.

Any person desiring to intervene or to protest this filing must file in accordance with Rules 211 and 214 of the Commission's Rules of Practice and Procedure (18 CFR 385.211 and 385.214). Protests will be considered by the Commission in determining the appropriate action to be taken, but will not serve to make protestants parties to the proceeding. Any person wishing to become a party must file a notice of intervention or motion to intervene, as appropriate. The Respondents' answers and all interventions, or protests must be filed on or before the comment date. The Respondents' answers, motions to intervene, and protests must be served on the Complainant.

The Commission encourages electronic submissions of protests and interventions in lieu of paper using the ''eFiling'' link at *http://www.ferc.gov.* Persons unable to file electronically should submit an original and 5 copies of the protest or intervention to the Federal Energy Regulatory Commission, 888 First Street NE, Washington, DC 20426.

This filing is accessible on-line at *http://www.ferc.gov,* using the ''eLibrary'' link and is available for review in the Commission's Public Reference Room in Washington, DC. There is an ''eSubscription'' link on the website that enables subscribers to receive email notification when a document is added to a subscribed docket(s). For assistance with any FERC Online service, please email *FERCOnlineSupport@ferc.gov,* or call (866) 208–3676 (toll free). For TTY, call (202) 502–8659.

Comment Date: 5:00 p.m. Eastern Time on July 1, 2019.

Dated: June 12, 2019.

Kimberly D. Bose,

Secretary.

[FR Doc. 2019–12816 Filed 6–17–19; 8:45 am]

BILLING CODE 6717–01–P

DEPARTMENT OF ENERGY

Federal Energy Regulatory Commission

[Docket No. CP19–478–000]

Notice of Request Under Blanket Authorization: Stingray Pipeline Company, LLC

Take notice that on June 5, 2019, Stingray Pipeline Company, LLC (Stingray), 1221 Lamar Street, Suite 1525, Houston, Texas 77010, filed in Docket No. CP19–478–000 a prior notice request pursuant to sections 157.205, and 157.216 of the Commission's regulations under the Natural Gas Act (NGA), and Stingray's blanket certificate issued in Docket No. CP91–1505–000, to abandon four compressor units, three from an offshore compressor station in the Gulf of Mexico and the fourth from an onshore compressor station in Cameron Parish, Louisiana, all as more fully set forth in the application which is on file with the Commission and open to public inspection.

The filing may also be viewed on the web at *http://www.ferc.gov* using the ''eLibrary'' link. Enter the docket number excluding the last three digits in the docket number field to access the document. For assistance, please contact FERC Online Support at *FERCOnlineSupport@ferc.gov* or toll free at (866) 208–3676, or TTY, contact (202) 502–8659.

Any questions concerning this application may be directed to Dale Miller, Assistant Treasurer, Stingray Pipeline Company, LLC, 1221 Lamar Street, Suite 1525, Houston, Texas 77010, by telephone at (713) 457–8308, or by email at *dale.miller@mcpoperating.com.*

Any person or the Commission's staff may, within 60 days after issuance of

the instant notice by the Commission, file pursuant to Rule 214 of the Commission's Procedural Rules (18 CFR 385.214) a motion to intervene or notice of intervention and pursuant to section 157.205 of the regulations under the NGA (18 CFR 157.205), a protest to the request. If no protest is filed within the time allowed therefore, the proposed activity shall be deemed to be authorized effective the day after the time allowed for filing a protest. If a protest is filed and not withdrawn within 30 days after the allowed time for filing a protest, the instant request shall be treated as an application for authorization pursuant to section 7 of the NGA.

Pursuant to section 157.9 of the Commission's rules, 18 CFR 157.9, within 90 days of this Notice the Commission staff will either: Complete its environmental assessment (EA) and place it into the Commission's public record (eLibrary) for this proceeding, or issue a Notice of Schedule for Environmental Review. If a Notice of Schedule for Environmental Review is issued, it will indicate, among other milestones, the anticipated date for the Commission staff's issuance of the final environmental impact statement (FEIS) or EA for this proposal. The filing of the EA in the Commission's public record for this proceeding or the issuance of a Notice of Schedule for Environmental Review will serve to notify federal and state agencies of the timing for the completion of all necessary reviews, and the subsequent need to complete all federal authorizations within 90 days of the date of issuance of the Commission staff's FEIS or EA.

Persons who wish to comment only on the environmental review of this project should submit an original and two copies of their comments to the Secretary of the Commission. Environmental commenters will be placed on the Commission's environmental mailing list, and will be notified of any meetings associated with the Commission's environmental review process. Environmental commenters will not be required to serve copies of filed documents on all other parties. However, the non-party commenters, will not receive copies of all documents filed by other parties or issued by the Commission and will not have the right to seek court review of the Commission's final order.

The Commission strongly encourages electronic filings of comments, protests and interventions in lieu of paper using the ''eFiling'' link at *http://www.ferc.gov.* Persons unable to file electronically should submit an original and seven copies of the protest or intervention to the Federal Energy Regulatory Commission, 888 First Street NE, Washington, DC 20426.

Dated: June 12, 2019.

Kimberly D. Bose,

Secretary.

[FR Doc. 2019–12815 Filed 6–17–19; 8:45 am]

BILLING CODE 6717–01–P

DEPARTMENT OF ENERGY

Federal Energy Regulatory Commission

[Docket No. PF19–3–000]

Enable Gulf Run Transmission, LLC, Enable Gas Transmission, LLC; Notice of Intent To Prepare an Environmental Impact Statement for the Planned Gulf Run and Line CP Modifications Project, Request for Comments on Environmental Issues, and Notice of Public Scoping Sessions

The staff of the Federal Energy Regulatory Commission (FERC or Commission) will prepare an environmental impact statement (EIS) that will discuss the environmental impacts of the Gulf Run and Line CP Modifications Project involving construction and operation of facilities by Enable Gulf Run Transmission, LLC (Gulf Run) and Enable Gas Transmission, LLC (EGT) in Jackson, Richland, Red River, DeSoto, Sabine, Vernon, Beauregard, and Calcasieu Parishes in Louisiana. The Commission will use this EIS in its decision-making process to determine whether the project is in the public convenience and necessity.

This notice announces the opening of the scoping process the Commission will use to gather input from the public and interested agencies about issues regarding the project. The National Environmental Policy Act (NEPA) requires the Commission to take into account the environmental impacts that could result from its action whenever it considers the issuance of a Certificate of Public Convenience and Necessity. NEPA also requires the Commission to discover concerns the public may have about proposals. This process is referred to as ''scoping.'' The main goal of the scoping process is to focus the analysis in the EIS on the important environmental issues. By this notice, the Commission requests public comments on the scope of issues to address in the EIS. To ensure that your comments are timely and properly recorded, please submit your comments so that the Commission receives them in Washington, DC on or before 5:00 p.m. Eastern Time on July 12, 2019.

You can make a difference by submitting your specific comments or concerns about the project. Your comments should focus on the potential environmental effects, reasonable alternatives, and measures to avoid or lessen environmental impacts. Your input will help the Commission staff determine what issues they need to evaluate in the EIS. Commission staff will consider all filed comments during the preparation of the EIS.

If you sent comments on this project to the Commission before the opening of this docket on March 18, 2019, you will need to file those comments in Docket No. PF19–3–000 to ensure they are considered as part of this proceeding.

This notice is being sent to the Commission's current environmental mailing list for this project. State and local government representatives should notify their constituents of this planned project and encourage them to comment on their areas of concern.

If you are a landowner receiving this notice, a pipeline company representative may contact you about the acquisition of an easement to construct, operate, and maintain the planned facilities. The company would seek to negotiate a mutually acceptable easement agreement. You are not required to enter into an agreement. However, if the Commission approves the project, that approval conveys with it the right of eminent domain. Therefore, if you and the company do not reach an easement agreement, the pipeline company could initiate condemnation proceedings in court. In such instances, compensation would be determined by a judge in accordance with state law.

A fact sheet prepared by the FERC entitled ''An Interstate Natural Gas Facility On My Land? What Do I Need To Know?'' is available for viewing on the FERC website (*www.ferc.gov*) at *https://www.ferc.gov/resources/guides/gas/gas.pdf.* This fact sheet addresses a number of typically asked questions, including the use of eminent domain and how to participate in the Commission's proceedings.

Public Participation

The Commission offers a free service called eSubscription which makes it easy to stay informed of all issuances and submittals regarding the dockets/projects to which you subscribe. These instant email notifications are the fastest way to receive notification and provide a link to the document files which can reduce the amount of time you spend researching proceedings. To sign up go

to *www.ferc.gov/docs-filing/esubscription.asp.*

For your convenience, there are four methods you can use to submit your comments to the Commission. The Commission encourages electronic filing of comments and has staff available to assist you at (866) 208–3676 or *FercOnlineSupport@ferc.gov.* Please carefully follow these instructions so that your comments are properly recorded.

(1) You can file your comments electronically using the *eComment* feature, which is located on the Commission's website (*www.ferc.gov*) under the link to *Documents and Filings.* Using eComment is an easy method for submitting brief, text-only comments on a project;

(2) You can file your comments electronically by using the *eFiling* feature, which is located on the Commission's website (*www.ferc.gov*) under the link to *Documents and Filings.* With eFiling, you can provide comments in a variety of formats by attaching them as a file with your submission. New eFiling users must first create an account by clicking on ''*eRegister.*'' You will be asked to select the type of filing you are making; a comment on a particular project is considered a ''Comment on a Filing''; or

(3) You can file a paper copy of your comments by mailing them to the following address. Be sure to reference the project docket number (PF19–3–000) with your submission: Kimberly D. Bose, Secretary, Federal Energy Regulatory Commission, 888 First Street NE, Room 1A, Washington, DC 20426.

(4) In lieu of sending written comments, the Commission invites you to attend one of the public scoping sessions its staff will conduct in the project area, scheduled as follows:

Date and time	Location
Wednesday, June 26, 2019, 4:30–6:30 p.m	Natchitoches Event Center, 750 Second St., Natchitoches, LA 71457, (318) 238–7500.
Thursday, June 27, 2019, 4:30–6:30 p.m	War Memorial Civic Center, 250 W 7th St., DeRidder, LA 70634, (337) 463–7212.

The primary goal of these scoping sessions is to have you identify the specific environmental issues and concerns that should be considered in the EIS. Individual verbal comments will be taken on a one-on-one basis with a court reporter. This format is designed to receive the maximum amount of verbal comments, in a convenient way during the timeframe allotted.

Each scoping session is scheduled from 4:30 p.m. to 6:30 p.m. CDT. You may arrive at any time after 4:00 p.m. There will not be a formal presentation by Commission staff when the session opens. If you wish to speak, the Commission staff will hand out numbers in the order of your arrival. Comments will be taken until 6:30 p.m. However, if no additional numbers have been handed out and all individuals who wish to provide comments have had an opportunity to do so, staff may conclude the session at 6:00 p.m. Please see appendix 1 for additional information on the session format and conduct.[1]

Your scoping comments will be recorded by a court reporter (with FERC staff or representative present) and become part of the public record for this proceeding. Transcripts will be publicly available on FERC's eLibrary system (see the last page of this notice for instructions on using eLibrary). If a significant number of people are interested in providing verbal comments in the one-on-one settings, a time limit of 5 minutes may be implemented for each commentor.

It is important to note that the Commission provides equal consideration to all comments received, whether filed in written form or provided verbally at a scoping session. Although there will not be a formal presentation, Commission staff will be available throughout the scoping session to answer your questions about the environmental review process. Representatives from Gulf Run and EGT will also be present to answer project-specific questions.

Please note this is not your only public input opportunity; please refer to the review process flow chart in appendix 2.

Summary of the Planned Project

For the Gulf Run project component, Gulf Run plans to construct and operate approximately 171 miles of natural gas transmission pipeline, two new compressor stations, and ancillary facilities extending from Westdale, Louisiana, south to two connection points near Starks and Gillis, Louisiana. New pipeline facilities would include approximately 135 miles of mainline pipeline and approximately 36 miles of lateral pipeline.

For the Line CP Modifications project component, EGT plans to implement modifications necessary to allow bi-directional flow on its existing Line CP. Additionally, EGT plans to abandon Line CP by sale to Gulf Run. The Gulf Run and Line CP Modifications Project is currently designed to transport 2,800,000 dekatherms per day (Dth/d) of natural gas. According to Gulf Run, its project would enhance the reliability and diversity of natural gas supply in the Gulf Coast Region and will create a new link between major supply basins and the Louisiana Gulf Coast.

The Gulf Run and Line CP Modifications Project would consist of the following facilities, all of which are in Louisiana:

- Mainline Pipeline—Approximately 135-mile-long, 42-inch-diameter natural gas transmission mainline pipeline extending from a receipt point at an interconnect with the existing EGT Line CP pipeline at the existing Westdale Compressor Station (CS) to delivery points at interconnects with the existing Golden Pass Pipeline, LLC and Transco Pipeline near Starks.
- Gillis Lateral—Approximately 36-mile-long, 36-inch-diameter lateral pipeline extending from the proposed Gulf Run CS #2 near DeRidder, to interconnects with multiple existing interstate pipelines (*e.g.,* Cheniere Creole Trail, L.P., Texas Eastern Transmission, LP, Transco, and Trunkline Gas Company, LLC) near Gillis.
- Two new compressor stations:
  - Gulf Run CS #1—To be constructed near the town of Many in Sabine Parish. Installed capacity will include up to 55,370 horsepower (hp) from one natural gas-powered Titan 250 and one natural gas-powered Titan 130 compressor units on an approximately 20-acre site.
  - Gulf Run CS #2—To be constructed near DeRidder in Vernon Parish. Installed capacity will include up to 62,840 hp from two natural gas-powered Titan 130 compressor units and one natural gas-powered Mars 100 compressor unit on an approximately 20-acre site.
- Six new meter stations: Two near Starks and four near Gillis.

[1] The appendices referenced in this notice will not appear in the **Federal Register**. Copies of the appendices were sent to all those receiving this notice in the mail and are available at *www.ferc.gov* using the link called ''eLibrary'' or from the Commission's Public Reference Room, 888 First Street NE, Washington, DC 20426, or call (202) 502-8371. For instructions on connecting to eLibrary, refer to the last page of this notice.

• New ancillary facilities including main line valves and pig launcher/receiver facilities.[2] The exact design and location of these facilities are to be determined, but it is anticipated that some facilities will be located within the confines of the proposed compressor station and meter station sites.

• In addition to new facilities to be constructed, the following modifications are planned for the existing EGT Line CP system:

○ Westdale Compressor Station (near Westdale in Red River Parish)—Install two natural gas-powered Mars 100 compressor units totaling 31,800 hp; restage the two existing natural gas-powered Mars 100 compressor units (totaling 30,000 hp); add up to eight air-cooled heat exchangers; modify existing station piping; and add a motor control center building fuel gas skid, power and control building, and standby generator.

○ Vernon Compressor Station (near North Hodge in Jackson Parish)—Restage the existing natural gas-powered Mars 100 and two Taurus 70 compressor units (totaling 35,604 hp); add air-cooled heat exchangers; and modify existing station piping.

• Alto Compressor Station (near Alto in Richland Parish)—Restage the existing natural gas-powered Mars 100 compressor unit (15,000 hp) and modify existing station piping.

○ Modifications to four existing meters stations consisting of adding bi-directional flow to the ANR Meter Station and the Columbia Meter Station, modifying the Midcontinent Express Pipeline Meter Station to increase size, and adding a new receipt meter at the EGT Meter Station between Line CP and existing EGT pipeline facilities not being sold to Gulf Run.

The general location of the project facilities is shown in appendix 3.

Land Requirements for Construction

Construction of the planned new aboveground facilities and the pipeline would disturb about 3,000 acres of land. Following construction, Gulf Run would maintain about 1,000 acres for permanent operation of the project's facilities; the remaining acreage would be restored and revert to former uses. About 45 percent of the planned mainline pipeline route and about 61 percent of the Gillis Lateral pipeline route parallels existing pipeline, utility, or road rights-of-way. Additionally, modifications to the existing Line CP system would disturb about approximately 40 acres of land. Following construction, the operational area of the Line CP modifications would generally be within the footprint of the existing facilities.

The EIS Process

The EIS will discuss impacts that could occur as a result of the construction and operation of the planned project under these general headings:

• Geology and soils;
• water resources and wetlands;
• vegetation and wildlife;
• threatened and endangered species;
• socioeconomics;
• cultural resources;
• land use;
• air quality and noise;
• public safety; and
• cumulative impacts

Commission staff will also evaluate possible alternatives to the planned project or portions of the project and make recommendations on how to lessen or avoid impacts on the various resource areas.

Although no formal application has been filed, Commission staff have already initiated a NEPA review under the Commission's pre-filing process. The purpose of the pre-filing process is to encourage early involvement of interested stakeholders and to identify and resolve issues before the Commission receives an application. As part of the pre-filing review, Commission staff will contact federal and state agencies to discuss their involvement in the scoping process and the preparation of the EIS.

The EIS will present Commission staffs' independent analysis of the issues. The draft EIS will be available in electronic format in the public record through eLibrary[3] and the Commission's website (*https://www.ferc.gov/industries/gas/enviro/eis.asp*). If eSubscribed, you will receive instant email notification when the draft EIS is issued. The draft EIS will be issued for an allotted public comment period. After the comment period on the draft EIS, Commission staff will consider all timely comments and revise the document, as necessary, before issuing a final EIS. To ensure Commission staff have the opportunity to consider and address your comments, please carefully follow the instructions in the Public Participation section, beginning on page 2.

With this notice, the Commission is asking agencies with jurisdiction by law and/or special expertise with respect to the environmental issues related to this project to formally cooperate in the preparation of the EIS.[4] Agencies that would like to request cooperating agency status should follow the instructions for filing comments provided under the Public Participation section of this notice.

Consultation Under Section 106 of the National Historic Preservation Act

In accordance with the Advisory Council on Historic Preservation's implementing regulations for section 106 of the National Historic Preservation Act, the Commission is using this notice to initiate consultation with the applicable State Historic Preservation Office(s), and to solicit their views and those of other government agencies, interested Indian tribes, and the public on the project's potential effects on historic properties.[5] The EIS for this project will document our findings on the impacts on historic properties and summarize the status of consultations under section 106.

Currently Identified Environmental Issues

Commission staff have already identified several issues that deserve attention based on a preliminary review of the planned facilities and the environmental information provided by Gulf Run and EGT. This preliminary list of issues may change based on your comments and our analysis:

• Impacts on wetlands, especially forested wetlands;
• potential impacts on threatened and endangered species;
• visual effects to cultural and scenic resources, such as the Hickory Branch state scenic river; and
• impacts on land use.

Environmental Mailing List

The environmental mailing list includes federal, state, and local government representatives and agencies; elected officials; Native American Tribes; and other interested parties. This list also includes all affected landowners (as defined in the Commission's regulations) who are potential right-of-way grantors, whose property may be used temporarily for project purposes, or who own homes

[2] A "pig" is a tool that the pipeline company inserts into and pushes through the pipeline for cleaning the pipeline, conducting internal inspections, or other purposes.

[3] For instructions on connecting to eLibrary, refer to the last page of this notice.

[4] The Council on Environmental Quality regulations addressing cooperating agency responsibilities are at Title 40, Code of Federal Regulations, Part 1501.6.

[5] The Advisory Council on Historic Preservation regulations are at Title 36, Code of Federal Regulations, Part 800. Those regulations define historic properties as any prehistoric or historic district, site, building, structure, or object included in or eligible for inclusion in the National Register of Historic Places.

within certain distances of aboveground facilities, and anyone who submits comments on the project. Commission staff will update the environmental mailing list as the analysis proceeds to ensure that Commission notices related to this environmental review are sent to all individuals, organizations, and government entities interested in and/or potentially affected by the planned project.

A *Notice of Availability* of the draft EIS will be sent to the environmental mailing list and will provide instructions to access the electronic document on the FERC's website (*www.ferc.gov*). If you need to make changes to your name/address, or if you would like to remove your name from the mailing list, please return the attached ''Mailing List Update Form'' (appendix 4).

Becoming an Intervenor

Once Gulf Run and EGT file their application with the Commission, you may want to become an ''intervenor'' which is an official party to the Commission's proceeding. Only intervenors have the right to seek rehearing of the Commission's decision and be heard by the courts if they choose to appeal the Commission's final ruling. An intervenor formally participates in the proceeding by filing a request to intervene pursuant to Rule 214 of the Commission's Rules of Practice and Procedures (18 CFR 385.214). Motions to intervene are more fully described at *http://www.ferc.gov/resources/guides/how-to/intervene.asp.* Please note that the Commission will not accept requests for intervenor status at this time. You must wait until the Commission receives a formal application for the project, after which the Commission will issue a public notice that establishes an intervention deadline.

Additional Information

Additional information about the project is available from the Commission's Office of External Affairs, at (866) 208–FERC, or on the FERC website (*www.ferc.gov*) using the eLibrary link. Click on the eLibrary link, click on ''General Search'' and enter the docket number in the ''Docket Number'' field, excluding the last three digits (*i.e.,* PF19–3). Be sure you have selected an appropriate date range. For assistance, please contact FERC Online Support at *FercOnlineSupport@ferc.gov* or toll free at (866) 208–3676, or for TTY, contact (202) 502–8659. The eLibrary link also provides access to the texts of all formal documents issued by the Commission, such as orders, notices, and rulemakings.

Public sessions or site visits will be posted on the Commission's calendar located at *www.ferc.gov/EventCalendar/EventsList.aspx* along with other related information.

Dated: June 12, 2019.

Kimberly D. Bose,

Secretary.

[FR Doc. 2019–12818 Filed 6–17–19; 8:45 am]

BILLING CODE 6717–01–P

DEPARTMENT OF ENERGY

Federal Energy Regulatory Commission

Combined Notice of Filings #1

Take notice that the Commission received the following exempt wholesale generator filings:

Docket Numbers: EG19–125–000.
Applicants: Palmas Wind, LLC.
Description: Notice of Self-Certification of Exempt Wholesale Generator Status of Palmas Wind, LLC.
Filed Date: 6/11/19.
Accession Number: 20190611–5117.
Comments Due: 5 p.m. ET 7/2/19.

Take notice that the Commission received the following electric rate filings:

Docket Numbers: ER15–1456–007; ER10–2615–012; ER10–2934–013; ER10–2959–014; ER11–2235–002; ER11–3859–018; ER11–4634–007; ER13–450–005; ER14–1699–008; ER15–1457–007; ER16–999–007; ER17–1605–001; ER17–436–006; ER17–437–009; ER18–920–002
Applicants: Beaver Falls, L.L.C., Chambers Cogeneration, Limited Partnership, Dighton Power, LLC, Dominion Energy Fairless, LLC, Dominion Energy Manchester Street, Inc., Greenleaf Energy Unit 1 LLC, Hazleton Generation LLC, Logan Generating Company, L.P., Marco DM Holdings, L.L.C., Marcus Hook Energy, L.P., Marcus Hook 50, L.P., Milford Power, LLC, Plum Point Energy Associates, LLC, Plum Point Services Company, LLC, Syracuse, L.L.C.
Description: Supplement to January 15, 2019 Notice of Change in Status of the SEG MBR Entities.
Filed Date: 6/10/19.
Accession Number: 20190610–5131.
Comments Due: 5 p.m. ET 7/1/19.

Docket Numbers: ER19–838–001.
Applicants: Midcontinent Independent System Operator, Inc.
Description: Compliance filing: 2019–06–11_Compliance re ATC Revisions to Att O for ADIT in response to EL18–157 to be effective 6/27/2018.
Filed Date: 6/11/19.
Accession Number: 20190611–5128.
Comments Due: 5 p.m. ET 7/2/19.

Docket Numbers: ER19–1409–001.
Applicants: Birdsboro Power LLC.
Description: Compliance filing: Compliance Filing Under Docket Nos. ER19–1409 and EL19–73 to be effective 5/30/2019.
Filed Date: 6/11/19.
Accession Number: 20190611–5134.
Comments Due: 5 p.m. ET 7/2/19.

Docket Numbers: ER19–2097–000.
Applicants: PacifiCorp.
Description: § 205(d) Rate Filing: Dixie/DGT Trans IC Agmt—Purgatory Flat to be effective 6/12/2019.
Filed Date: 6/11/19.
Accession Number: 20190611–5123.
Comments Due: 5 p.m. ET 7/2/19.

Docket Numbers: ER19–2098–000.
Applicants: Southwest Power Pool, Inc.
Description: § 205(d) Rate Filing: 1628R15 Western Farmers Electric Cooperative NITSA NOA to be effective 6/1/2019.
Filed Date: 6/11/19.
Accession Number: 20190611–5125.
Comments Due: 5 p.m. ET 7/2/19.

Docket Numbers: ER19–2099–000.
Applicants: Midcontinent Independent System Operator, Inc.
Description: § 205(d) Rate Filing: 2019–06–11_Stage 1B of Auction Revenue Right Allocation Process Filing to be effective 8/11/2019.
Filed Date: 6/11/19.
Accession Number: 20190611–5126.
Comments Due: 5 p.m. ET 7/2/19.

Docket Numbers: ER19–2100–000.
Applicants: ALLETE, Inc., Midcontinent Independent System Operator, Inc.
Description: § 205(d) Rate Filing: 2019–06–11_SA 3312 MP–GRE T–L (Bull Moose) to be effective 6/11/2019.
Filed Date: 6/11/19.
Accession Number: 20190611–5129.
Comments Due: 5 p.m. ET 7/2/19.

Docket Numbers: ER19–2101–000.
Applicants: Alabama Power Company.
Description: § 205(d) Rate Filing: Tyre Bridge Solar LGIA Filing to be effective 5/29/2019.
Filed Date: 6/11/19.
Accession Number: 20190611–5131.
Comments Due: 5 p.m. ET 7/2/19.

Docket Numbers: ER19–2102–000.
Applicants: ITC Midwest LLC.
Description: § 205(d) Rate Filing: Filing of Master JUA with Anita Municipal Utilities to be effective 8/11/2019.
Filed Date: 6/11/19.
Accession Number: 20190611–5132.

Comments Due: 5 p.m. ET 7/2/19.

Docket Numbers: ER19–2103–000.

Applicants: GridLiance Heartland LLC.

Description: § 205(d) Rate Filing: GLH OATT TSA Filing to be effective 8/9/2019.

Filed Date: 6/11/19.

Accession Number: 20190611–5133.

Comments Due: 5 p.m. ET 7/2/19.

Docket Numbers: ER19–2104–000.

Applicants: New York Independent System Operator, Inc.

Description: § 205(d) Rate Filing: NYISO 205 External ICAP Suppliers Supplemental Resource Evaluation (SRE) Penalty to be effective 8/12/2019.

Filed Date: 6/11/19.

Accession Number: 20190611–5135.

Comments Due: 5 p.m. ET 7/2/19.

Docket Numbers: ER19–2105–000.

Applicants: Appalachian Power Company, PJM Interconnection, L.L.C.

Description: § 205(d) Rate Filing: PJM TOs submit revisions to OATT, Schedules 7 and 8 and Att. H–A re: Border Rate to be effective 8/10/2019.

Filed Date: 6/11/19.

Accession Number: 20190611–5137.

Comments Due: 5 p.m. ET 7/2/19.

Docket Numbers: ER19–2106–000.

Applicants: Duke Energy Progress, LLC.

Description: Petition for Waiver of Tariff Provisions of Duke Energy Progress, LLC.

Filed Date: 6/11/19.

Accession Number: 20190611–5138.

Comments Due: 5 p.m. ET 7/2/19.

Docket Numbers: ER19–2107–000.

Applicants: Black Rock Wind Force, LLC.

Description: Request for Limited Waiver, et al. of Black Rock Wind Force, LLC.

Filed Date: 6/11/19.

Accession Number: 20190611–5142.

Comments Due: 5 p.m. ET 6/21/19.

Docket Numbers: ER19–2108–000.

Applicants: NSTAR Electric Company.

Description: Notice of Termination of the Related Facilities Service Agreement (No. 80) of NSTAR Electric Company.

Filed Date: 6/11/19.

Accession Number: 20190611–5144.

Comments Due: 5 p.m. ET 7/2/19.

Docket Numbers: ER19–2109–000.

Applicants: PPL Electric Utilities Corporation, PJM Interconnection, L.L.C.

Description: § 205(d) Rate Filing: PPL submits an ECSA, Service Agreement No. 5419 with MAIT to be effective 8/12/2019.

Filed Date: 6/12/19.

Accession Number: 20190612–5039.

Comments Due: 5 p.m. ET 7/3/19.

Docket Numbers: ER19–2110–000.

Applicants: Midcontinent Independent System Operator, Inc.

Description: § 205(d) Rate Filing: 2019–06–12_SA 3317 NSPM-Nobles 2 Power Partners E&P (J512) to be effective 5/13/2019.

Filed Date: 6/12/19.

Accession Number: 20190612–5093.

Comments Due: 5 p.m. ET 7/3/19.

The filings are accessible in the Commission's eLibrary system by clicking on the links or querying the docket number.

Any person desiring to intervene or protest in any of the above proceedings must file in accordance with Rules 211 and 214 of the Commission's Regulations (18 CFR 385.211 and 385.214) on or before 5:00 p.m. Eastern time on the specified comment date. Protests may be considered, but intervention is necessary to become a party to the proceeding.

eFiling is encouraged. More detailed information relating to filing requirements, interventions, protests, service, and qualifying facilities filings can be found at: *http://www.ferc.gov/docs-filing/efiling/filing-req.pdf.* For other information, call (866) 208–3676 (toll free). For TTY, call (202) 502–8659.

Dated: June 12, 2019.

Kimberly D. Bose,

Secretary.

[FR Doc. 2019–12812 Filed 6–17–19; 8:45 am]

BILLING CODE 6717–01–P

DEPARTMENT OF ENERGY

Federal Energy Regulatory Commission

[Docket No. CP19–476–000]

American Midstream (AlaTenn), LLC; Notice of Request Under Blanket Authorization

Take notice that on June 3, 2019, American Midstream (AlaTenn), LLC (AlaTenn), 2103 City West Boulevard, Building #4, Suite 800, Houston, Texas 77042, filed in the above referenced docket a prior notice request pursuant to sections 157.205, 157.208, 157.210, and 157.216 of the Commission's regulations under the Natural Gas Act (NGA) and its blanket certificate issued in Docket No. CP89–2201–000 for authorization to: (i) Abandon in-place four existing compressor units, totaling 1,455 horsepower (hp), at its Decatur Compression Station in Limestone County, Alabama; and (ii) install two new compressor units, totaling 3,550 hp, and appurtenances at its Decatur Compressor Station. AlaTenn states that the proposed project will allow it to provide additional firm transportation service to the City of Huntsville, Alabama, d/b/a Huntsville Utilities and improve system reliability. AlaTenn estimates the cost of the project to be $5,415,200, all as more fully set forth in the request which is on file with the Commission and open to public inspection.

The filing is available for review at the Commission in the Public Reference Room or may be viewed on the Commission's website web at *http://www.ferc.gov* using the ''eLibrary'' link. Enter the docket number excluding the last three digits in the docket number field to access the document. For assistance, contact FERC at *FERCOnlineSupport@ferc.gov* or call toll-free, (886) 208–3676 or TYY, (202) 502–8659.

Any questions regarding this application should be directed to Dennis J. Kelly, Senior Attorney, American Midstream (AlaTenn), LLC (AlaTenn), 2103 City West Boulevard, Building #4, Suite 800, Houston, Texas 77042, by telephone at (345) 241–3546 or by email at *dkelly@americanmidstream.com.*

Any person or the Commission's staff may, within 60 days after issuance of the instant notice by the Commission, file pursuant to Rule 214 of the Commission's Procedural Rules (18 CFR 385.214) a motion to intervene or notice of intervention and pursuant to section 157.205 of the regulations under the NGA (18 CFR 157.205), a protest to the request. If no protest is filed within the time allowed therefore, the proposed activity shall be deemed to be authorized effective the day after the time allowed for filing a protest. If a protest is filed and not withdrawn within 30 days after the allowed time for filing a protest, the instant request shall be treated as an application for authorization pursuant to section 7 of the NGA.

Pursuant to section 157.9 of the Commission's rules, 18 CFR 157.9, within 90 days of this Notice the Commission staff will either: Complete its environmental assessment (EA) and place it into the Commission's public record (eLibrary) for this proceeding; or issue a Notice of Schedule for Environmental Review. If a Notice of Schedule for Environmental Review is issued, it will indicate, among other milestones, the anticipated date for the Commission staff's issuance of the EA for this proposal. The filing of the EA in the Commission's public record for this proceeding or the issuance of a Notice of Schedule for Environmental

Review will serve to notify federal and state agencies of the timing for the completion of all necessary reviews, and the subsequent need to complete all federal authorizations within 90 days of the date of issuance of the Commission staff's EA.

Persons who wish to comment only on the environmental review of this project should submit an original and two copies of their comments to the Secretary of the Commission. Environmental commenters will be placed on the Commission's environmental mailing list and will be notified of any meetings associated with the Commission's environmental review process. Environmental commenters will not be required to serve copies of filed documents on all other parties. However, the non-party commenters will not receive copies of all documents filed by other parties or issued by the Commission and will not have the right to seek court review of the Commission's final order.

The Commission strongly encourages electronic filings of comments, protests and interventions in lieu of paper using the ''eFiling'' link at *http://www.ferc.gov.* Persons unable to file electronically should submit an original and 3 copies of the protest or intervention to the Federal Energy regulatory Commission, 888 First Street NE, Washington, DC 20426.

Dated: June 12, 2019.

Kimberly D. Bose,

Secretary.

[FR Doc. 2019–12814 Filed 6–17–19; 8:45 am]

BILLING CODE 6717–01–P

DEPARTMENT OF ENERGY

Federal Energy Regulatory Commission

[Docket No. OR19–27–000]

Gunvor USA LLC v. Colonial Pipeline Company; Notice of Complaint

Take notice that on June 11, 2019, pursuant to sections 1(5), 6, 8, 9, 13, 15 and 16 of the Interstate Commerce Act,[1] section 1803 of the Energy Policy Act of 1992 (EPAct),[2] Rule 206 of the Rules of Practice and Procedures of the Federal Energy Regulatory Commission (Commission),[3] and Rules 343.2 of the Commission's Procedural Rules Applicable to Oil Pipeline Proceedings,[4] Gunvor USA LLC (Complainant) filed a formal complaint against Colonial Pipeline Company (Respondent) challenging the just and reasonableness of (1) Respondent's cost-based transportation rates in FERC Tariff No. 99.36.0 and predecessor tariffs; (2) Respondent's market-based rate authority and rates charged pursuant to that authority; and (3) Respondent's charges relating to product loss allocation and transmix, all as more fully explained in the complaint.

Complainant certifies that copies of the complaint were served on the contacts for Respondent as listed on the Commission's list of Corporate Officials.

Any person desiring to intervene or to protest this filing must file in accordance with Rules 211 and 214 of the Commission's Rules of Practice and Procedure (18 CFR 385.211, 385.214). Protests will be considered by the Commission in determining the appropriate action to be taken, but will not serve to make protestants parties to the proceeding. Any person wishing to become a party must file a notice of intervention or motion to intervene, as appropriate. The Respondent's answer and all interventions, or protests must be filed on or before the comment date. The Respondent's answer, motions to intervene, and protests must be served on the Complainants.

The Commission encourages electronic submission of protests and interventions in lieu of paper using the ''eFiling'' link at *http://www.ferc.gov.* Persons unable to file electronically should submit an original and 5 copies of the protest or intervention to the Federal Energy Regulatory Commission, 888 First Street NE, Washington, DC 20426.

This filing is accessible on-line at *http://www.ferc.gov,* using the ''eLibrary'' link and is available for electronic review in the Commission's Public Reference Room in Washington, DC. There is an ''eSubscription'' link on the website that enables subscribers to receive email notification when a document is added to a subscribed docket(s). For assistance with any FERC Online service, please email *FERCOnlineSupport@ferc.gov,* or call (866) 208–3676 (toll free). For TTY, call (202) 502–8659.

Comment Date: 5 p.m. Eastern Time on July 11, 2019.

Dated: June 12, 2019.

Kimberly D. Bose,

Secretary.

[FR Doc. 2019–12817 Filed 6–17–19; 8:45 am]

BILLING CODE 6717–01–P

[1] 49 U.S.C. App. 1(5), 6, 8, 9, 13, 15 and 16.

[2] Public Law 102–486, 106 Stat. 2772 (1992).

[3] 18 CFR 385.206 (2018).

[4] 18 CFR 343.2 (2018).

DEPARTMENT OF ENERGY

Federal Energy Regulatory Commission

[Docket No. CP19–474–000]

Florida Gas Transmission Company, LLC; Notice of Application

Take notice that on May 31, 2019, Florida Gas Transmission Company, LLC (FGT), 1300 Main Street, Houston, Texas 77002, filed in Docket No. CP19–474–000 an application pursuant to section 7(c) of the Natural Gas Act (NGA) requesting authorization to construct, install, and operate: (i) Approximately 13.7 miles of 30-inch-diameter mainline pipe loop extension and auxiliary facilities in Columbia and Union Counties, Florida; (ii) approximately 7 miles of 30-inch-diameter mainline pipe loop extension and auxiliary facilities in Clay and Putnam Counties, Florida; (iii) minor modifications to Compressor Station 18 in Orange County, Florida; and (iv) a relocation of existing pig receivers in Clay, Putnam, and Union Counties, Florida. FGT states that the project would enable the delivery of up to 169,000 Million British thermal units per day (MMBtu/d) of firm transportation natural gas to their customers—109,000 MMBtu/d would utilize existing capacity and 60,000 MMBtu/d would be created by the proposed facilities. FGT is proposing negotiated rates and estimates the total cost of the Putnam Expansion Project to be approximately $102,572,436, all as more fully set forth in the application which is on file with the Commission and open to public inspection.

The filing is available for review at the Commission in the Public Reference Room or may be viewed on the Commission's website web at *http://www.ferc.gov* using the ''eLibrary'' link. Enter the docket number excluding the last three digits in the docket number field to access the document. For assistance, contact FERC at *FERCOnlineSupport@ferc.gov* or call toll-free, (886) 208–3676 or TYY, (202) 502–8659.

Any questions concerning this application may be directed to Blair Lichtenwalter, Senior Director—Certificates, Florida Gas Transmission Company, LLC, 1300 Main Street, Houston, Texas 77002, by telephone at (713) 989–2605, by facsimile at (713) 989–1205, or by email at *Blair.Lichtenwalter@energytransfer.com.*

Pursuant to section 157.9 of the Commission's rules, 18 CFR 157.9, within 90 days of this Notice the Commission staff will either: complete

its environmental assessment (EA) and place it into the Commission's public record (eLibrary) for this proceeding; or issue a Notice of Schedule for Environmental Review. If a Notice of Schedule for Environmental Review is issued, it will indicate, among other milestones, the anticipated date for the Commission staff's issuance of the final environmental impact statement (FEIS) or EA for this proposal. The filing of the EA in the Commission's public record for this proceeding or the issuance of a Notice of Schedule for Environmental Review will serve to notify federal and state agencies of the timing for the completion of all necessary reviews, and the subsequent need to complete all federal authorizations within 90 days of the date of issuance of the Commission staff's FEIS or EA.

There are two ways to become involved in the Commission's review of this project. First, any person wishing to obtain legal status by becoming a party to the proceedings for this project should, on or before the comment date stated below file with the Federal Energy Regulatory Commission, 888 First Street NE, Washington, DC 20426, a motion to intervene in accordance with the requirements of the Commission's Rules of Practice and Procedure (18 CFR 385.214 or 385.211) and the Regulations under the NGA (18 CFR 157.10). A person obtaining party status will be placed on the service list maintained by the Secretary of the Commission and will receive copies of all documents filed by the applicant and by all other parties. A party must submit 3 copies of filings made in the proceeding with the Commission and must provide a copy to the applicant and to every other party. Only parties to the proceeding can ask for court review of Commission orders in the proceeding.

However, a person does not have to intervene in order to have comments considered. The second way to participate is by filing with the Secretary of the Commission, as soon as possible, an original and two copies of comments in support of or in opposition to this project. The Commission will consider these comments in determining the appropriate action to be taken, but the filing of a comment alone will not serve to make the filer a party to the proceeding. The Commission's rules require that persons filing comments in opposition to the project provide copies of their protests only to the party or parties directly involved in the protest.

Persons who wish to comment only on the environmental review of this project should submit an original and two copies of their comments to the Secretary of the Commission. Environmental commenters will be placed on the Commission's environmental mailing list and will be notified of any meetings associated with the Commission's environmental review process. Environmental commenters will not be required to serve copies of filed documents on all other parties. However, the non-party commenters will not receive copies of all documents filed by other parties or issued by the Commission and will not have the right to seek court review of the Commission's final order.

As of the February 27, 2018 date of the Commission's order in Docket No. CP16–4–001, the Commission will apply its revised practice concerning out-of-time motions to intervene in any new Natural Gas Act section 3 or section 7 proceeding.[1] Persons desiring to become a party to a certificate proceeding are to intervene in a timely manner. If seeking to intervene out-of-time, the movant is required to ''show good cause why the time limitation should be waived,'' and should provide justification by reference to factors set forth in Rule 214(d)(1) of the Commission's Rules and Regulations.[2]

The Commission strongly encourages electronic filings of comments, protests and interventions in lieu of paper using the ''eFiling'' link at *http://www.ferc.gov.* Persons unable to file electronically should submit an original and 3 copies of the protest or intervention to the Federal Energy Regulatory Commission, 888 First Street NE, Washington, DC 20426.

Comment Date: 5:00 p.m. Eastern Time on July 3, 2019.

Dated: June 12, 2019.

Kimberly D. Bose,

Secretary.

[FR Doc. 2019–12813 Filed 6–17–19; 8:45 am]

BILLING CODE 6717–01–P

[1] *Tennessee Gas Pipeline Company, L.L.C.,* 162 FERC ¶ 61,167 at ¶ 50 (2018).

[2] 18 CFR 385.214(d)(1).

FEDERAL COMMUNICATIONS COMMISSION

Radio Broadcasting Services; AM or FM Proposals To Change the Community of License

AGENCY: Federal Communications Commission.

ACTION: Notice.

DATES: The agency must receive comments on or before August 19, 2019.

ADDRESSES: Federal Communications Commission, 445 12th Street SW, Washington, DC 20554.

FOR FURTHER INFORMATION CONTACT: Rolanda F. Smith, 202–418–2054.

SUPPLEMENTARY INFORMATION: The following applicants filed AM or FM proposals to change the community of license: COCHISE MEDIA LICENSES LLC, KFMR(FM), Fac. ID No. 198760, Channel 247C3, To CENTRAL HEIGHTS-MIDL, AZ, From VIRDEN, NM, File No. BPH–20190423ABE; POLNET COMMUNICATIONS, LTD, WRXB(AM), 1590 kHz, To PALM RIVER-CLAIR MEL, FL, From ST. PETERSBURG BEACH, FL, File No. BP–20190528ABA; and COCHISE BROADCASTING LLC, KFMM(FM), Fac. ID No. 72368, Channel 256C1, To VIRDEN, NM, From THATCHER, AZ, File No. BPH–20190423ABD.

The full text of these applications is available for inspection and copying during normal business hours in the Commission's Reference Center, 445 12th Street SW, Washington, DC 20554 or electronically via the Media Bureau's Consolidated Data Base System, *http://licensing.fcc.gov/prod/cdbs/pubacc/prod/app_sear.htm.*

Federal Communications Commission.

Nazifa Sawez,

Assistant Chief, Audio Division, Media Bureau.

[FR Doc. 2019–12896 Filed 6–17–19; 8:45 am]

BILLING CODE 6712–01–P

FEDERAL ELECTION COMMISSION

Sunshine Act Meeting

TIME AND DATE: Thursday, June 20, 2019 at 10:00 a.m.

PLACE: 1050 First Street NE, Washington, DC (12th Floor).

STATUS: This meeting will be open to the public.

MATTERS TO BE CONSIDERED:

Correction and Approval of Minutes for May 9, 2019

Correction and Approval of Minutes for May 23, 2019

Audit Division Recommendation Memorandum on the Oklahoma Democratic Party (A17–19)

Internet Ad Disclaimers Rulemaking Proposal for REG 2011–02 (Internet Communication Disclaimers and Definition of ''Public Communication'')

Management and Administrative Matters

CONTACT PERSON FOR MORE INFORMATION: Judith Ingram, Press Officer,

Telephone: (202) 694–1220.

Individuals who plan to attend and require special assistance, such as sign language interpretation or other reasonable accommodations, should contact Laura E. Sinram, Acting Secretary and Clerk, at (202) 694–1040, at least 72 hours prior to the meeting date.

Laura E. Sinram,

Acting Secretary and Clerk of the Commission.

[FR Doc. 2019–13002 Filed 6–14–19; 4:15 pm]

BILLING CODE 6715–01–P

FEDERAL RESERVE SYSTEM

Formations of, Acquisitions by, and Mergers of Bank Holding Companies

The companies listed in this notice have applied to the Board for approval, pursuant to the Bank Holding Company Act of 1956 (12 U.S.C. 1841 *et seq.*) (BHC Act), Regulation Y (12 CFR part 225), and all other applicable statutes and regulations to become a bank holding company and/or to acquire the assets or the ownership of, control of, or the power to vote shares of a bank or bank holding company and all of the banks and nonbanking companies owned by the bank holding company, including the companies listed below.

The applications listed below, as well as other related filings required by the Board, are available for immediate inspection at the Federal Reserve Bank indicated. The applications will also be available for inspection at the offices of the Board of Governors. Interested persons may express their views in writing on the standards enumerated in the BHC Act (12 U.S.C. 1842(c)). If the proposal also involves the acquisition of a nonbanking company, the review also includes whether the acquisition of the nonbanking company complies with the standards in section 4 of the BHC Act (12 U.S.C. 1843). Unless otherwise noted, nonbanking activities will be conducted throughout the United States.

Unless otherwise noted, comments regarding each of these applications must be received at the Reserve Bank indicated or the offices of the Board of Governors not later than July 16, 2019.

A. Federal Reserve Bank of Boston (Prabal Chakrabarti, Senior Vice President) 600 Atlantic Avenue, Boston, Massachusetts 02210–2204. Comments can also be sent electronically to *BOS.SRC.Applications.Comments@bos.frb.org:*

1. *Provident Bancorp Inc., Amesbury, Massachusetts;* to become a bank holding company by acquiring 100 percent of the voting shares of Provident Bank, also of Amesbury, Massachusetts, upon the conversion of Provident Bancorp from mutual to stock form.

Board of Governors of the Federal Reserve System, June 13, 2019.

Yao-Chin Chao,

Assistant Secretary of the Board.

[FR Doc. 2019–12823 Filed 6–17–19; 8:45 am]

BILLING CODE 6210–01–P

FEDERAL RESERVE SYSTEM

Privacy Act of 1974; System of Records

AGENCY: Board of Governors of the Federal Reserve System.

ACTION: Notice of a modified system of records.

SUMMARY: Pursuant to the provisions of the Privacy Act of 1974, notice is given that the Board of Governors of the Federal Reserve System (Board) proposes the modification of a system of records, BGFRS–40, entitled ''FRB—Board Subscription Services.'' BGFRS–40 maintains subscription-related information regarding individuals who subscribe to Board publications.

DATES: Comments must be received on or before July 18, 2019.

This modified system of records will become effective July 18, 2019, without further notice, unless comments dictate otherwise.

The Office of Management and Budget (OMB), which has oversight responsibility under the Privacy Act, requires a 30-day period prior to publication in the **Federal Register** in which to review the system and to provide any comments to the agency. The public is then given a 30-day period in which to comment, in accordance with 5 U.S.C. 552a(e)(4) and (11).

ADDRESSES: You may submit comments, identified by *BGFRS–40; FRB-Board Subscription Services,* by any of the following methods:

- *Agency Website: https://www.federalreserve.gov.* Follow the instructions for submitting comments at *https://www.federalreserve.gov/apps/foia/proposedregs.aspx.*
- *Email: regs.comments@federalreserve.gov.* Include SORN name and number in the subject line of the message.
- *Fax:* (202) 452–3819 or (202) 452–3102.
- *Mail:* Ann E. Misback, Secretary, Board of Governors of the Federal Reserve System, 20th Street and Constitution Avenue NW, Washington, DC 20551.

All public comments will be made available on the Board's website at *https://www.federalreserve.gov/apps/foia/proposedregs.aspx* as submitted, unless modified for technical reasons, or to remove sensitive personally identifiable information. Public comments may also be viewed electronically or in paper form in Room 146, 1709 New York Avenue NW, Washington, DC 20006, between 9:00 a.m. and 5:00 p.m. on weekdays.

FOR FURTHER INFORMATION CONTACT: David B. Husband, Senior Attorney, (202) 530–6270, or *david.b.husband@frb.gov;* Legal Division, Board of Governors of the Federal Reserve System, 20th Street and Constitution Avenue NW, Washington, DC 20551.

SUPPLEMENTARY INFORMATION: The main publication that the Board provides is the Federal Reserve Regulatory Service (FRRS), which is a compilation of the statutes administered by the Board along with regulations, interpretations, policy statements, rulings, and opinions issued by the Board and its staff. The FRRS also includes select regulations issued by other agencies that are relevant to the Board's responsibilities. The Board also provides subscriptions to other publications such as general publications, reports to Congress, and economic research and data.

The Board contracts the FRRS subscription services to a vendor who processes subscriptions purchased on the FRRS website. Going forward, to accommodate subscriber demand for an offline payment option, the vendor will also process offline check payments for FRRS subscriptions. The Board will continue to operate the subscription services for the other publications (*e.g.,* the general publications). Accordingly, the Board is updating the categories of records in the system and updating the history field to reflect the earlier publication of this SORN.

The Board is also making a technical correction to the routine uses for the system and replacing two BGFRS–40 system-specific uses that reflect OMB breach notification related uses with the corresponding Board General Routine Uses. This change is necessary because the Board published BGFRS–40 with the OMB breach notification uses before amending the ''General Routine Uses of Board Systems of Records,'' to incorporate those same OMB breach notification uses. See 83 FR 43872, August 28, 2018, available at *https://www.govinfo.gov/content/pkg/FR-2018-08-28/pdf/2018-18627.pdf.* Therefore, the Board is replacing the BGFRS–40 system-specific routine use (1) with General Routine Use I and the BGFRS–

40 system-specific routine use (2) with General Routine Use J.

SYSTEM NAME AND NUMBER

BGFRS–40, ''FRB—Board Subscription Services''

SECURITY CLASSIFICATION:

Unclassified.

SYSTEM LOCATION:

The vendor maintains FRRS subscription materials in paper and electronic form. The vendor is located at 101 Fry Drive, Mechanicsburg, PA 17055. The Board maintains historical FRRS subscription records and new FRRS records created and transmitted by the vendor to the Board (such as the monthly call reports), along with the subscription information for other Board publications. Paper records are stored in file folders and electronic records are stored on the Board's network. Records are maintained at the Board's central offices located at: Board of Governors of the Federal Reserve System, 20th Street and Constitution Avenue NW, Washington, DC 20551.

SYSTEM MANAGER(S):

Both managers are located at the Board's central offices in Washington, DC. The manager for the FRRS is Mike Budzinski, Manager, Editing, Office of Board Members, (202) 452–3262, *mike.w.budzinski@frb.gov.* For all other Board publications and for historical records stored at the Board, the manager is Gladys Parran, Manager, Printing & Fulfillment, Office of Board Members, (202) 736–5520, *gladys.parran@frb.gov.*

AUTHORITY FOR MAINTENANCE OF THE SYSTEM:

12 U.S.C. 244.

PURPOSE(S) OF THE SYSTEM:

The Board maintains these records to allow individuals to subscribe to Board publications. The main publication the Board provides is the Federal Reserve Regulatory Service (FRRS), a publication that compiles the statutes administered by the Board along with regulations, interpretations, policy statements, rulings, and opinions issued by the Board and its staff as well as select regulations issued by other agencies that are relevant to the Board's responsibilities. The Board also makes available other publications such as general publications, reports to Congress, and economic research and data.

CATEGORIES OF INDIVIDUALS COVERED BY THE SYSTEM:

Persons who subscribe to the FRRS or create an account for the purpose of subscribing to the FRRS and persons who request to subscribe to other available Board publications.

CATEGORIES OF RECORDS IN THE SYSTEM:

The Board Subscription Services system covers records related to the ordering and fulfillment of orders for the FRRS and other Board publications, such as economic research and data, general publications, and reports to Congress. The information collected for all publications (including the FRRS) includes the subscriber's name, company name or affiliation (if applicable), shipping address, order type, email address, and phone number. For Board publications other than the FRRS, the Board also collects the payment type (check, money order, credit card) and relevant payment information.

For the FRRS, the vendor collects the check payment if the order is by check. In addition, subscriptions for the FRRS also include the FRRS account information (log-in and password information), the billing address, order history, and fulfillment information (shipping and delivery instructions). The Board's vendor provides the Board with a monthly report on FRRS subscriptions. The monthly report records FRRS subscription revenue and selected subscriber and fulfillment information of current FRRS subscribers, including the individual subscriber's name, company name (if applicable), email address, and order type. The Board retains historical FRRS subscription and payment information from the Board's operation of the FRRS subscription service for the appropriate six-year record retention period.

RECORD SOURCE CATEGORIES:

The subscriber to the publication or the FRRS account holder provides the relevant information.

ROUTINE USES OF RECORDS MAINTAINED IN THE SYSTEM, INCLUDING CATEGORIES OF USERS AND PURPOSES OF SUCH USES:

General routine uses, A, C, D, G, I, and J apply to this system. These general routine uses are located at *https://www.federalreserve.gov/files/SORN-page-general-routine-uses-of-board-systems-of-records.pdf* and are published in the **Federal Register** at 83 FR 43872 (August 28, 2018) at 43873–74.

POLICIES AND PRACTICES FOR STORAGE OF RECORDS:

Paper records in this system are stored in file folders with access limited to staff with a need to know. Electronic records are stored on a secure server.

POLICIES AND PRACTICES FOR RETRIEVAL OF RECORDS:

Paper and electronic records can be retrieved by name or other identifying aspects.

POLICIES AND PRACTICES FOR RETENTION AND DISPOSAL OF RECORDS:

The retention period for the records in this system is six years. Records will be disposed of at the end of their retention periods, subject to an annual close-out.

ADMINISTRATIVE, TECHNICAL, AND PHYSICAL SAFEGUARDS:

Board and vendor staff are restricted to the data that is required in the performances of their duties. This is accomplished through user roles, which provide differential access levels to users based on their official duties and need-to-know. Only Board or vendor staff whose official duties require such access may view the subscription and fulfillment records. Electronic records are password protected and paper records are stored in locked file cabinets.

Only select Board and vendor staff have access to the FRRS subscriber and fulfillment information provided in the monthly FRRS vendor-provided report. Authorized Board staff access the monthly FRRS report through an encrypted connection.

RECORD ACCESS PROCEDURES:

The Privacy Act allows individuals the right to access records maintained about them in a Board system of records. Your request for access must: (1) Contain a statement that the request is made pursuant to the Privacy Act of 1974; (2) provide either the name of the Board system of records expected to contain the record requested or a concise description of the system of records; (3) provide the information necessary to verify your identity; and (4) provide any other information that may assist in the rapid identification of the record you seek.

Current or former Board employees may make a request for access by contacting the Board office that maintains the record. The Board handles all Privacy Act requests as both a Privacy Act request and as a Freedom of Information Act request. The Board does not charge fees to a requestor seeking to access or amend his/her Privacy Act records.

You may submit your Privacy Act request to the—Secretary of the Board, Board of Governors of the Federal Reserve System, 20th Street and Constitution Avenue NW, Washington, DC 20551.

You may also submit your Privacy Act request electronically through the

Board's FOIA ''Electronic Request Form'' located here: *https://www.federalreserve.gov/secure/forms/efoiaform.aspx.*

CONTESTING RECORD PROCEDURES:

The Privacy Act allows individuals to seek amendment of information that is erroneous, irrelevant, untimely, or incomplete and is maintained in a system of records that pertains to them. To request an amendment to your record, you should clearly mark the request as a ''Privacy Act Amendment Request.'' You have the burden of proof for demonstrating the appropriateness of the requested amendment and you must provide relevant and convincing evidence in support of your request.

Your request for amendment must: (1) Provide the name of the specific Board system of records containing the record you seek to amend; (2) identify the specific portion of the record you seek to amend; (3) describe the nature of and reasons for each requested amendment; (4) explain why you believe the record is not accurate, relevant, timely, or complete; and (5) unless you have already done so in a related Privacy Act request for access or amendment, provide the necessary information to verify your identity.

NOTIFICATION PROCEDURES:

Same as ''Access procedures'' above. You may also follow this procedure in order to request an accounting of previous disclosures of records pertaining to you as provided for by 5 U.S.C. 552a(c).

EXEMPTIONS PROMULGATED FOR THE SYSTEM:

No exemptions are claimed for this system.

HISTORY:

This SORN was previously published at 83 FR 15569 (April 11, 2018).

Board of Governors of the Federal Reserve System, June 11, 2019.

Ann Misback,

Secretary of the Board.

[FR Doc. 2019–12837 Filed 6–17–19; 8:45 am]

BILLING CODE 6210–01–P

DEPARTMENT OF DEFENSE

GENERAL SERVICES ADMINISTRATION

NATIONAL AERONAUTICS AND SPACE ADMINISTRATION

[OMB Control No. 9000–0187; Docket No. 2019–0003; Sequence No. 23]

Submission for OMB Review; Reporting of Nonconforming Items to the Government-Industry Data Exchange Program

AGENCY: Department of Defense (DOD), General Services Administration (GSA), and National Aeronautics and Space Administration (NASA).

ACTION: Notice.

SUMMARY: Under the provisions of the Paperwork Reduction Act, the Regulatory Secretariat Division has submitted to the Office of Management and Budget (OMB) a request to review and approve a new information collection requirement regarding reporting certain counterfeit or suspect counterfeit parts and certain major or critical nonconformances to the Government-Industry Data Exchange Program system.

DATES: Submit comments on or before July 18, 2019.

ADDRESSES: Submit comments regarding this burden estimate or any other aspect of this collection of information, including suggestions for reducing this burden to: Office of Information and Regulatory Affairs of OMB, Attention: Desk Officer for GSA, Room 10236, NEOB, Washington, DC 20503. Additionally submit a copy to GSA by any of the following methods:

- *Federal eRulemaking Portal:* This website provides the ability to type short comments directly into the comment field or attach a file for lengthier comments. Go to *http://www.regulations.gov* and follow the instructions on the site.
- *Mail:* General Services Administration, Regulatory Secretariat Division (MVCB), 1800 F Street NW, Washington, DC 20405. ATTN: Ms. Mandell/IC 9000–0187, Reporting of Nonconforming Items to the Government-Industry Data Exchange Program.

Instructions: All items submitted must cite Information Collection 9000–0187, Reporting of Nonconforming Items to the Government-Industry Data Exchange. Comments received generally will be posted without change to *http://www.regulations.gov,* including any personal and/or business confidential information provided. To confirm receipt of your comment(s), please check *www.regulations.gov,* approximately two to three days after submission to verify posting (except allow 30 days for posting of comments submitted by mail).

FOR FURTHER INFORMATION CONTACT: Marilyn E. Chambers, Procurement Analyst, at telephone 202–285–7380, or *marilyn.chambers@gsa.gov.*

SUPPLEMENTARY INFORMATION:

A. OMB Number, Title, and any Associated Form(s)

OMB Control Number 9000–0187, Expanded Reporting of Nonconforming Items.

B. Needs and Uses

The goal of reporting counterfeit and suspect counterfeit items and common items that have a critical or major nonconformance into the Government-Industry Data Exchange Program (GIDEP) system is to avoid, detect, and address nonconforming or counterfeit parts in the supply chain. This information will be available to businesses for searching prior to placing orders, thus enabling the avoidance of purchasing counterfeit items in the first place.

C. Annual Burden

Respondents: 5,166.
Responses per Respondent: 1.
Total Annual Responses: 5,166.
Hours per Response: 6.
Total Burden Hours: 30,996.

D. Public Comment

A 60 day notice was published in the **Federal Register** at 79 FR 33164, on June 10, 2014, as part of a proposed rule under FAR Case 2013–002. Fourteen responses on the proposed rule were received, of which 4 respondents provided comments on the estimates in the information collection requirement, as addressed in the preamble of the **Federal Register** notice that published the proposed rule. The estimate of the burden changed due to public comment.

Several respondents stated that the burden is currently underestimated. According to one respondent, the estimate of 474,000 reports underestimates the potential burden of the expanded reporting requirements because it failed to account for the growth in GIDEP reporting entities and relies on the number of companies currently participating in GIDEP.

Various respondents commented that 3 hours per report was substantially underestimated. One respondent noted that any incident must be identified, investigated, and reported. Procedures need to be followed, individuals with

expertise need to be consulted, tests need to be performed and reports to memorialize findings of the review need to be prepared and filed. Another respondent noted that a single report can take up to 100 hours to complete, including significant legal review. Another respondent commented that the ''very low estimate'' seems to ignore the significant time and costs associated with training, implementation, and the risks of liability.

DoD, GSA, and NASA have completely revised the estimated number of reports per year because the rule has been significantly de-scoped and data was also reviewed regarding the current number or participating contractors and the current number of reports submitted, resulting in an estimate of 51,657 participating contractors submitting 5,166 reports per year.

Industry already has all the information necessary to prepare a GIDEP report, based on existing quality assurance systems and procedures. However, in response to the industry comments, DoD, GSA, and NASA have reconsidered the number of estimated hours to prepare, review, and submit the report at an average of 6 hours per report.

Obtaining Copies: Requesters may obtain a copy of the information collection documents from the General Services Administration, Regulatory Secretariat Division (MVCB), 1800 F Street NW, Washington, DC 20405, telephone 202–501–4755. Please cite OMB Control No. 9000–0187, Reporting of Nonconforming Items to the Government-Industry Data Exchange Program, in all correspondence.

Dated: June 12, 2019.

Janet Fry,

Director, Federal Acquisition Policy Division, Office of Governmentwide Acquisition Policy, Office of Acquisition Policy, Office of Governmentwide Policy.

[FR Doc. 2019–12774 Filed 6–17–19; 8:45 a.m.]

BILLING CODE 6820–EP–P

DEPARTMENT OF HEALTH AND HUMAN SERVICES

Administration for Children and Families

Proposed Information Collection Activity; Head Start (HS) Connects: Individualizing and Connecting Families to Family Support Services (New Collection)

AGENCY: Office of Planning, Research, and Evaluation; Administration for Children and Families; HHS.

ACTION: Request for public comment.

SUMMARY: The Administration for Children and Families (ACF) at the U.S. Department of Health and Human Services (HHS) seeks approval to conduct semi-structured, qualitative interviews with Head Start staff, parents/guardians, and community providers at six Head Start programs for case studies that explore case management and coordination of family support services.

DATES: *Comments due within 60 days of publication.* In compliance with the requirements of Section 3506(c)(2)(A) of the Paperwork Reduction Act of 1995, the Administration for Children and Families is soliciting public comment on the specific aspects of the information collection described above.

ADDRESSES: Copies of the proposed collection of information can be obtained and comments may be forwarded by emailing *OPREinfo collection@acf.hhs.gov.* Alternatively, copies can also be obtained by writing to the Administration for Children and Families, Office of Planning, Research, and Evaluation, 330 C Street SW, Washington, DC 20201, Attn: OPRE Reports Clearance Officer. All requests, emailed or written, should be identified by the title of the information collection.

SUPPLEMENTARY INFORMATION:

Description: The case studies proposed as part of the *Head Start (HS) Connects: Individualizing and Connecting Families to Family Support Services* project are intended to build knowledge about how Head Start programs (Head Start or Early Head Start grantees, delegate agencies, and staff) across the country coordinate family well-being services for parents/guardians and tailor coordination processes to individual family needs. The case studies will explore case management and coordination of family support services from multiple perspectives, including from the perspective of Head Start Administrators/Family and Community Partnerships Managers, Family Support Staff, Other Staff, Parents/Guardians, and Community Providers, at each of the six study sites during site visits. The case studies will further inform the development of design options for a large-scale descriptive study of Head Start programs nationally that is focused on describing how Head Start programs coordinate family support services for parents/guardians.

Respondents: Head Start Administrator/Family and Community Partnerships Manager, Head Start Family Support Staff, Other Head Start Staff, Parents/Guardians, Community Providers.

Annual Burden Estimates:

Instrument	Total/annual number of respondents	Number of responses per respondent	Average burden hours per response	Annual burden hours
Head Start Administrator/Family and Community Partnerships Manager pre-visit call	6	1	1	6
Head Start Family Support Staff pre-visit call	18	1	1	18
Head Start Administrator/Family and Community Partnerships Manager interview	6	1	2	12
Head Start Family Support Staff interview	18	1	2.5	45
Head Start Other Staff interview	18	1	1	18
Parent/Guardian interview	24	1	2	48
Community Providers interview	12	1	1	12

Estimated Total Annual Burden Hours: 159.

Comments: The Department specifically requests comments on (a) whether the proposed collection of information is necessary for the proper performance of the functions of the agency, including whether the information shall have practical utility; (b) the accuracy of the agency's estimate of the burden of the proposed collection of information; (c) the quality, utility, and clarity of the information to be collected; and (d) ways to minimize the burden of the collection of information

on respondents, including through the use of automated collection techniques or other forms of information technology. Consideration will be given to comments and suggestions submitted within 60 days of this publication.

Authority: Section 640(a)(2)(D) and section 649 of the Improving Head Start for School Readiness Act of 2007.

Mary B. Jones,

ACF/OPRE Certifying Officer.

[FR Doc. 2019–12795 Filed 6–17–19; 8:45 am]

BILLING CODE 4184–22–P

DEPARTMENT OF HEALTH AND HUMAN SERVICES

Administration for Children and Families

Proposed Information Collection Activity; 45 CFR 303.7—Provision of Services in Intergovernmental IV–D; Federally Approved Forms (OMB #0970–0085)

AGENCY: Office of Child Support Enforcement; Administration for Children and Families; HHS

ACTION: Request for Public Comment.

SUMMARY: This is a revision to an existing data collection which expires December 31, 2019. This data collection consists of 13 intergovernmental forms used by states and other entities to process intergovernmental child support cases. This request is for minor revisions to the approved forms.

DATES: *Comments due within 60 days of publication.* In compliance with the requirements of Section 3506(c)(2)(A) of the Paperwork Reduction Act of 1995, the Administration for Children and Families is soliciting public comment on the specific aspects of the information collection described above.

ADDRESSES: Copies of the proposed collection of information can be obtained and comments may be forwarded by emailing *infocollection@acf.hhs.gov.* Alternatively, copies can also be obtained by writing to the Administration for Children and Families, Office of Planning, Research, and Evaluation, 330 C Street, SW, Washington, DC 20201, Attn: OPRE Reports Clearance Officer. All requests, emailed or written, should be identified by the title of the information collection.

SUPPLEMENTARY INFORMATION:

Description: Public Law 104–193, the Personal Responsibility and Work Opportunity Reconciliation Act of 1996, amended 42 U.S.C. 666 to require State Child Support Enforcement (CSE) agencies to enact the Uniform Interstate Family Support Act (UIFSA) into State law by January 1, 1998. Section 311(b) of UIFSA requires the States to use forms mandated by Federal law. 45 CFR 303.7(a)(4) also requires child support programs to use federally-approved forms in intergovernmental IV–D cases unless a country has provided alternative forms.

Proposed changes to the forms include updates for clarification and consistency to the instructions on all of the forms. Additional changes include:

- On the Child Support Enforcement Transmittal #3—Request for Assistance/Discovery, the addition of a new case processing action to facilitate payment processing for a direct Income Withholding Order, and the revision of the payment forwarding action.
- On the Declaration in Support of Establishing Parentage, the revision of the declaration signature section to make it consistent with the General Testimony and more flexible for cases involved children in foster care.

Respondents: State agencies administering a child support program under title IV–D of the Social Security Act.

ANNUAL BURDEN ESTIMATES

Instrument	Number of respondents	Number of responses per respondent	Average burden hours per response	Total burden hours
Transmittal #1—Initial Request	54	18,246	0.17	167,498
Transmittal #1—Initial Request Acknowledgement *	54	18,246	0.05	49,264
Transmittal #2—Subsequent Action	54	13,685	0.08	59,119
Transmittal #3—Request for Assistance/Discovery	54	2,737	0.08	11,824
Uniform Support Petition	54	7,298	0.05	19,705
General Testimony	54	7,298	0.33	130,050
Declaration in Support of Establishing Parentage	54	2,737	0.15	22,170
Child Support Locate Request	54	182	0.05	491
Notice of Determination of Controlling Order	54	2	0.25	27
Letter of Transmittal Requesting Registration	54	10,948	0.08	47,295
Personal Information Form for UIFSA § 311 *	54	7,298	0.05	19,705
Child Support Agency Confidential Information Form *	54	21,895	0.05	59,117
Request for Change of Support Payment Location Pursuant to UIFSA 319(b) *	54	91	0.05	246
Estimated Total Annual Burden Hours:				586,511

Comments: The Department specifically requests comments on (a) whether the proposed collection of information is necessary for the proper performance of the functions of the agency, including whether the information shall have practical utility; (b) the accuracy of the agency's estimate of the burden of the proposed collection of information; (c) the quality, utility, and clarity of the information to be collected; and (d) ways to minimize the burden of the collection of information on respondents, including through the use of automated collection techniques or other forms of information technology. Consideration will be given to comments and suggestions submitted within 60 days of this publication.

Authority: 45 CFR 303.7.

Mary B. Jones,

ACF/OPRE Certifying Officer.

[FR Doc. 2019–12794 Filed 6–17–19; 8:45 am]

BILLING CODE 4184–41–P

DEPARTMENT OF HEALTH AND HUMAN SERVICES

Administration for Children and Families

Proposed Information Collection Activity; Child Care and Development Fund (CCDF) Tribal Annual Report—ACF–700 (0970–0430)

AGENCY: Office of Child Care; Administration for Children and Families; HHS.

ACTION: Request for public comment.

SUMMARY: The Administration for Children and Families (ACF) is requesting a three-year extension of the form ACF–700: Child Care and Development Fund (CCDF) Tribal Annual Report (OMB #0970–0430, expiration 11/30/2019) with changes.

DATES: *Comments due within 60 days of publication.* In compliance with the requirements of Section 3506(c)(2)(A) of the Paperwork Reduction Act of 1995, the Administration for Children and Families is soliciting public comment on the specific aspects of the information collection described above.

ADDRESSES: Copies of the proposed collection of information can be obtained and comments may be forwarded by emailing *infocollection@acf.hhs.gov.* Alternatively, copies can also be obtained by writing to the Administration for Children and Families, Office of Planning, Research, and Evaluation, 330 C Street SW, Washington, DC 20201, Attn: OPRE Reports Clearance Officer. All requests, emailed or written, should be identified by the title of the information collection.

SUPPLEMENTARY INFORMATION:

Description: The Child Care and Development Fund (CCDF) Tribal Annual Report (ACF–700) requests Tribal Lead Agencies (TLAs) to provide annual Tribal aggregate information on services provided through the CCDF, which is required by CCDF regulations (45 FR parts 98 and 99). The revised ACF–700 report consists of an introductory section that provides program characteristics and two parts: (1) Administrative Data, and (2) Tribal Narrative. The content and format of the entire form have been revised to address Child Care and Development Block Grant (CCDBG) Act of 2014 changes and to reduce the reporting burden to TLAs.

Information from the ACF–700 will be included in the CCDF Report to Congress, as appropriate, and will be shared with TLAs to inform them of CCDF-funded activities.

Respondents: Tribal Governments.

Annual Burden Estimates:

Instrument	Total number of respondents	Total number of responses per respondent	Average burden hours per response	Total burden hours	Annual burden hours
ACF–700	138 (Tribes with small allocation)	3	19	7,866	2,622
ACF–700	83 (Tribes with medium/large allocation).	3	26	6,474	2,158

Estimated Total Annual Burden Hours: 4,780.

Comments: The Department specifically requests comments on (a) whether the proposed collection of information is necessary for the proper performance of the functions of the agency, including whether the information shall have practical utility; (b) the accuracy of the agency's estimate of the burden of the proposed collection of information; (c) the quality, utility, and clarity of the information to be collected; and (d) ways to minimize the burden of the collection of information on respondents, including through the use of automated collection techniques or other forms of information technology. Consideration will be given to comments and suggestions submitted within 60 days of this publication.

Authority: 42 U.S.C. 9857.

Mary B. Jones,

ACF/OPRE Certifying Officer.

[FR Doc. 2019–12782 Filed 6–17–19; 8:45 am]

BILLING CODE 4184–43–P

DEPARTMENT OF HEALTH AND HUMAN SERVICES

Administration for Children and Families

Proposed Information Collection Activity; Assessing the Implementation and Cost of High Quality Early Care and Education: Field Test (0970–0499)

AGENCY: Office of Planning, Research, and Evaluation, Administration for Children and Families, HHS.

ACTION: Request for public comment.

SUMMARY: This information request is part of the project, Assessing the Implementation and Cost of High Quality Early Care and Education (ECE–ICHQ). The project's goal is to create a technically sound and feasible instrument that will provide consistent, systematic measures of the implementation and costs of education and care in center-based settings that serve children from birth to age 5. The resulting measures will inform research, policy, and practice by improving understanding of variations in what centers do to support quality, their associated costs, and how resources for ECE may be better aligned with expectations for quality.

DATES: *Comments due within 60 days of publication.* In compliance with the requirements of Section 3506(c)(2)(A) of the Paperwork Reduction Act of 1995, the Administration for Children and Families is soliciting public comment on the specific aspects of the information collection described above.

ADDRESSES: Copies of the proposed collection of information can be obtained and comments may be forwarded by emailing *OPREinfocollection@acf.hhs.gov.* Alternatively, copies can also be obtained by writing to the Administration for Children and Families, Office of Planning, Research, and Evaluation, 330 C Street SW, Washington, DC 20201, Attn: OPRE Reports Clearance Officer. All requests, emailed or written should be identified by the title of the information collection.

SUPPLEMENTARY INFORMATION:

Description: The Administration for Children and Families (ACF) at the U.S. Department of Health and Human Services (HHS) seeks approval to collect new information to use in testing measures of the implementation and costs of high quality early care and education. This information collection is part of the project, Assessing the Implementation and Cost of High Quality Early Care and Education (ECE–

ICHQ). The project's goal is to create a technically sound and feasible instrument that will provide consistent, systematic measures of the implementation and costs of education and care in center-based settings that serve children from birth to age 5. The resulting measures will inform research, policy, and practice by improving understanding of variations in what centers do to support quality, their associated costs, and how resources for ECE may be better aligned with expectations for quality. The goals of the study are (1) to test and refine a data collection approach to gather information about implementation activities and costs of key functions within ECE centers and (2) to develop new measures of implementation and costs for use together in understanding ways to support quality. The study has completed two phases of data collection to develop the data collection tools and measures. The study team collected data through on-site visits to 15 centers as part of an initial phase of data collection to pre-test information collections (data collected under clearance #0970–0355). A second phase (OMB #0970–0499) relied on remote data collection through an electronic cost workbook, telephone interviews, and web-based surveys to gather information from 30 centers in three states to develop preliminary measures of implementation and cost and further reduced and refined the data collection tools.

This proposed new information collection is focused on a field test of the measures to assess the psychometric properties of the implementation measures and to examine the associations between measures of implementation, cost, and quality. The field test will include a mix of remote and on-site data collection.

Respondents: ECE site administrators or center directors, program directors, education specialists, financial managers or accountants, teachers, and aides.

Annual Burden Estimates:

Instrument	Number of respondents	Number of responses per respondent	Average burden hours per response	Total burden hours
Center recruitment call (*to gain participation; assumes outreach to 10 centers for every 1 center needed*):				
Center director	800	1	.33	264
Umbrella organization administrator	75	1	.33	25
Center engagement call (*to gather basic characteristics and plan steps for participation; assumes 20% may withdraw after this step*)	100	1	.50	50
Implementation interview protocol:				
Center director	80	1	3	240
Additional center staff	20	1	3	60
Electronic cost workbook	80	1	8	640
Staff rosters for time use survey	80	1	.25	20
Time-use survey	1,120	1	.25	280
Classroom rosters for observations	80	1	.50	40
Total Burden				1,619

Comments: The Department specifically requests comments on (a) whether the proposed collection of information is necessary for the proper performance of the functions of the agency, including whether the information shall have practical utility; (b) the accuracy of the agency's estimate of the burden of the proposed collection of information; (c) the quality, utility, and clarity of the information to be collected; and (d) ways to minimize the burden of the collection of information on respondents, including through the use of automated collection techniques or other forms of information technology. Consideration will be given to comments and suggestions submitted within 60 days of this publication.

Authority: Social Security Act § 418 as extended by the Continuing Appropriations Act of 2017 and the TANF Extension Act of 2019.

Mary B. Jones,

ACF/OPRE Certifying Officer.

[FR Doc. 2019–12796 Filed 6–17–19; 8:45 am]

BILLING CODE 4184–23–P

DEPARTMENT OF HEALTH AND HUMAN SERVICES

Administration for Children and Families

Submission for OMB Review; Survey of Head Start Grantees on Training and Technical Assistance (New Collection)

AGENCY: Office of Planning, Research, and Evaluation; Administration for Children and Families; HHS.

ACTION: Request for public comment.

SUMMARY: The Administration for Children and Families (ACF) at the U.S. Department of Health and Human Services (HHS) seeks approval to conduct a statistically representative survey of directors and managers/coordinators from Head Start grantee organizations regarding their access to and use of training and technical assistance (T/TA) from multiple sources, including ACF's Early Childhood Training and Technical Assistance system. The purpose of the data collection is to inform ACF on three aspects of grantee directors and managers/coordinators T/TA experience: (1) Search and selection of T/TA; (2) receipt of T/TA; (3) and potential relationships between T/TA received and perceived change in practice.

DATES: *Comments due within 30 days of publication.* OMB is required to make a decision concerning the collection of information between 30 and 60 days after publication of this document in the **Federal Register**. Therefore, a comment is best assured of having its full effect if OMB receives it within 30 days of publication.

ADDRESSES: Written comments and recommendations for the proposed information collection should be sent directly to the following: Office of Management and Budget, Paperwork Reduction Project, Email: *OIRA_SUBMISSION@OMB.EOP.GOV*, Attn: Desk Officer for the Administration for Children and Families.

Copies of the proposed collection may be obtained by writing to the Administration for Children and Families, Office of Planning, Research and Evaluation, 330 C Street SW,

Washington, DC 20201, Attn: OPRE Reports Clearance Officer. All requests should be identified by the title of the information collection. Email address: *OPREinfocollection@acf.hhs.gov.*

SUPPLEMENTARY INFORMATION:

Description: The Head Start Directors Wave 1 survey addresses the grantee's organizational characteristics, how the organization defines and diffuses T/TA, T/TA received and requested in the prior program year, and overall organizational goals and reflections on T/TA efforts for the current year. The Head Start Managers/Coordinators Wave 2 survey addresses four distinct domains of Head Start activity: (1) Program management and fiscal operations; (2) education; (3) parent and family engagement; and (4) health and wellness. The Wave 2 survey addresses how these activity domains are structured and staffed with the grantee organization, the types of T/TA and resources sought and used to improve practice in each domain, perceptions of usefulness of recent T/TA received, and T/TA priorities for the next program year.

Respondents: Head Start Directors, Head Start Managers/Coordinators.

ANNUAL BURDEN ESTIMATES

Instrument	Total/annual number of respondents	Number of responses per respondent	Average burden hours per response	Annual burden hours
Wave 1 Head Start Director Survey	1,200	1	.75	900
Wave 2 Head Start Managers/Coordinator Survey	860	1	.75	644

Estimated Total Annual Burden Hours: 1,544.

Authority: The Statutory Authority for this data collection is: Section 640(a)(2)(D) and section 649 of the Improving Head Start for School Readiness Act of 2007.

Mary B. Jones,

ACF/OPRE Certifying Officer.

[FR Doc. 2019–12783 Filed 6–17–19; 8:45 am]

BILLING CODE 4184–40–P

DEPARTMENT OF HEALTH AND HUMAN SERVICES

Administration for Children and Families

Submission for OMB Review; Formative Data Collections for ACF Program Support (New Collection)

AGENCY: Office of Planning, Research, and Evaluation, Administration for Children and Families, HHS.

ACTION: Request for public comment.

SUMMARY: The Office of Planning, Research, and Evaluation (OPRE), in the Administration for Children and Families (ACF) at the U.S. Department of Health and Human Services (HHS) intends to request approval from the Office of Management and Budget (OMB) for a generic clearance to conduct a variety of formative data collections with more than nine respondents. These information collections would not be highly systematic or intended to be statistically representative or otherwise generalizable. ACF programs promote the economic and social well-being of families, children, individuals and communities. Many ACF program offices need to learn more about funded program services so that an understanding of program or grantee processes and potential for improvements can inform ACF decision-making and program support. Information collected under this generic would help address these needs.

DATES: *Comments due within 30 days of publication.* OMB is required to make a decision concerning the collection of information between 30 and 60 days after publication of this document in the **Federal Register**. Therefore, a comment is best assured of having its full effect if OMB receives it within 30 days of publication.

ADDRESSES: Written comments and recommendations for the proposed information collection should be sent directly to the following: Office of Management and Budget, Paperwork Reduction Project, Email: *OIRA_SUBMISSION@OMB.EOP.GOV,* Attn: Desk Officer for the Administration for Children and Families.

Copies of the proposed collection may be obtained by emailing *OPREinfocollection@acf.hhs.gov.* Alternatively, copies can also be obtained by writing to the Administration for Children and Families, Office of Planning, Research, and Evaluation, 330 C Street SW, Washington, DC 20201, Attn: OPRE Reports Clearance Officer. All requests, emailed or written, should be identified by the title of the information collection.

SUPPLEMENTARY INFORMATION:

Description: Information gathering for program support was originally described under the Formative Data Collections for ACF Research Generic Clearance (0970–0356), but is now being requested as a stand-alone generic clearance. A 60-day comment period was provided as part of the approval process for #0970–0356, which included description of information collections for program support. We are now providing a 30-day comment period specific to this generic clearance for program support.

The goals of the generic information collections under this approval are to obtain information about program and grantee processes or needs, and to inform the following types of activities, among others:

- Delivery of targeted assistance and workflows related to program implementation or the development or refinement of program and grantee processes, and the development and refinement of recordkeeping and communication systems.
- Planning for provision of programmatic or evaluation-related training or technical assistance (T/TA).
- Obtaining grantee or other stakeholder input on the development of program performance measures.
- Use of rapid-cycle testing activities to strengthen programs in preparation for summative evaluation.
- Development of learning agendas and research priorities.

ACF envisions using a variety of techniques such as semi-structured discussions, focus groups, surveys, templates, open-ended requests, and telephone or in-person interviews, in order to reach these goals.

Following standard OMB requirements, OPRE will submit a change request for each individual data collection activity under this generic clearance. Each request will include the individual instrument(s), a justification specific to the individual information collection, and any supplementary documents. OMB should review requests within 10 days of submission.

Respondents: Example respondents include: current or prospective service providers, training or technical assistance (T/TA) providers, grantees, contractors, current and potential participants in ACF programs or similar comparison groups, experts in fields

pertaining to ACF programs, key stakeholder groups involved in ACF projects and programs, individuals engaged in program re-design or demonstration development for evaluation, state or local government officials, or others involved in or prospectively involved in ACF programs.

ANNUAL BURDEN ESTIMATES

Instrument type	Estimated total number of respondents	Estimated number of responses per respondent	Average burden hours per response	Estimated total burden hours
Semi-Structured Discussions and Focus Groups	2,000	1	2	4,000
Interviews	1,000	1	1	1,000
Questionnaires/Surveys	1,000	* 1.5	.5	750
Templates and Open-ended requests	250	1	10	2,500
Total				8,250

* We have estimated 1.5 responses to account for rapid cycle testing, which will require multiple responses.

Authority: Social Security Act, Sec. 1110. [42 U.S.C. 1310].

Mary B. Jones,

ACF/OPRE Certifying Officer.

[FR Doc. 2019–12801 Filed 6–17–19; 8:45 am]

BILLING CODE 4184–79–P

DEPARTMENT OF HEALTH AND HUMAN SERVICES

Health Resources and Services Administration

Agency Information Collection Activities: Proposed Collection: Comment Request Information Request Title: 340B Drug Pricing Program Reporting Requirements, OMB Number 0915–0176—Extension

AGENCY: Health Resources and Services Administration (HRSA), Department of Health and Human Services (HHS).

ACTION: Notice.

SUMMARY: In compliance with the requirement for opportunity for public comment on proposed data collection projects of the Paperwork Reduction Act of 1995, HRSA announces plans to submit an Information Collection Request (ICR), described below, to the Office of Management and Budget (OMB). Prior to submitting the ICR to OMB, HRSA seeks comments from the public regarding the burden estimate or any other aspect of the ICR.

DATES: Comments on this ICR must be received no later than August 19, 2019.

ADDRESSES: Submit your comments to *paperwork@hrsa.gov* or mail the HRSA Information Collection Clearance Officer, Room 14N136B, 5600 Fishers Lane, Rockville, MD 20857.

FOR FURTHER INFORMATION CONTACT: To request more information on the proposed project or to obtain a copy of the data collection plans and draft instruments, email *paperwork@hrsa.gov* or call Lisa Wright-Solomon, the HRSA Information Collection Clearance Officer, at (301) 443–1984.

SUPPLEMENTARY INFORMATION: When submitting comments or requesting information, please include the information request collection title for reference.

Information Collection Request Title: Drug Pricing Program Reporting Requirements OMB No. 0915–0176—[Extension].

Abstract: Section 340B of the Public Health Service Act (PHS Act ''Limitation on Prices of Drugs Purchased by Covered Entities'') instructs HHS to enter into a Pharmaceutical Pricing Agreement (PPA) with manufacturers of covered outpatient drugs. Manufacturers are required by section 1927(a)(5)(A) of the Social Security Act to enter into agreements with the Secretary of HHS to comply with section 340B of the PHS Act if they participate in the Medicaid Drug Rebate Program. When a drug manufacturer signs a PPA, it is opting into the 340B Drug Pricing Program (340B Program) and it agrees to the statutory requirement that prices charged for covered outpatient drugs to covered entities will not exceed defined 340B ceiling prices, which are based on quarterly pricing data reported by manufacturers to the Centers for Medicare & Medicaid Services (CMS). When an eligible covered entity voluntarily decides to enroll and participate in the 340B Program, it accepts responsibility for ensuring compliance with all provisions of the 340B Program, including all associated costs. Covered entities that choose to participate in the 340B Program must comply with the requirements of section 340B(a)(5) of the PHS Act. Section 340B(a)(5)(A) prohibits a covered entity from accepting a discount for a drug that would also generate a Medicaid rebate. Further, section 340B(a)(5)(B) prohibits a covered entity from reselling or otherwise transferring a discounted drug to a person who is not a patient of the covered entity.

Section 340B(a)(5)(C) of the PHS Act permits the Secretary of HHS and manufacturers of a covered outpatient drug to conduct audits of covered entities in accordance with procedures established by the Secretary related to the number, duration, and scope of the audits. Manufacturers are permitted to conduct an audit only when there is reasonable cause to believe a violation of section 340B(a)(5)(A) or (B) has occurred. The manufacturer notifies the covered entity in writing when it believes the covered entity has violated these provisions of the 340B Program. If the problem cannot be resolved, the manufacturer will then submit an audit work plan describing the audit and evidence in support of the reasonable cause standard to the HRSA, Healthcare Systems Bureau, Office of Pharmacy Affairs (OPA) for review. OPA will review the documentation to determine if reasonable cause exists. Once the audit is completed, the manufacturer will submit copies of the audit report to OPA for review and resolution of the findings, as appropriate. The manufacturer will also submit an informational copy of the audit report to the HHS Office of Inspector General (OIG).

In response to the statutory mandate of section 340B(a)(5)(C) to permit the Secretary or manufacturers to conduct audits of covered entities and because of the potential for disputes involving covered entities and participating drug manufacturers, OPA developed an informal voluntary dispute resolution process for manufacturers and covered entities who, prior to filing a request for resolution of a dispute with OPA,

should attempt in good faith to resolve the dispute. All parties involved in the dispute should maintain written documentation as evidence of a good faith attempt to resolve the dispute. To request voluntary dispute resolution of an unresolved dispute, a party submits a written request for a review of the dispute to OPA. A committee appointed to review the documentation will send a letter to the party alleged to have committed a violation. The party will be asked to provide a response to or a rebuttal of the allegations.

HRSA published a notice in 1996 and a policy release in 2011 on manufacturer audit guidelines and the informal dispute resolution process (61 FR 65406 (December 12, 1996) and ''Clarification of Manufacturer Audits of 340B Covered Entities,'' Release No. 2011–3).

Need and Proposed Use of the Information: HRSA is proposing the collection of information related to the manufacturer audit guidelines. These guidelines contain the following reporting/notification elements:

1. Manufacturers should notify the covered entity in writing when it believes a violation has occurred;
2. manufacturers should submit documentation to OPA as evidence of good faith of attempts to resolve a dispute;
3. manufacturers must submit an audit work plan to OPA;
4. manufacturers should submit the audit report to the OPA and informational copies to the HHS OIG; and
5. the covered entity should provide a written response to the audit report.

This information is necessary to ensure the orderly conduct of manufacturer audits. Also, the informal dispute resolution process requires the participating manufacturer or covered entity requesting dispute resolution to provide OPA with a written request. The party alleged to have committed a 340B Program violation may provide a response or rebuttal to OPA. This information is necessary to ensure that the dispute will be resolved in a fair and equitable manner.

Likely Respondents: Drug manufacturers and 340B covered entities.

Burden Statement: Burden in this context means the time expended by persons to generate, maintain, retain, disclose or provide the information requested during an audit. This includes the time needed to review instructions, to develop, acquire, install, and utilize technology and systems for the purpose of collecting, validating and verifying information, processing and maintaining information, and disclosing and providing information, to train personnel and to be able to respond to a collection of information, to search data sources, to complete and review the collection of information, and to transmit or otherwise disclose the information for both covered entities and manufacturers. The total annual burden hours estimated for this ICR are summarized in the table below.

TOTAL ESTIMATED ANNUALIZED BURDEN HOURS

Form name	Number of respondents	Number of responses per respondent	Total responses	Average burden per response (in hours)	Total burden hours
Audits					
Good faith Resolution [1]	10	1	10	60	600
Audit Notification to Entity [1]	10	1	10	6	60
Audit Workplan [1]	43	1	43	12	516
Audit Report [1]	14	1	14	12	168
Entity Response	14	1	14	12	168
Dispute Resolution					
Mediation Request	10	4	40	15	600
Rebuttal	10	1	10	28	280
Total	111		120		2,392

[1] Prepared by the manufacturer.

Recordkeeping Burden:

Recordkeeping requirement	Number of recordkeepers	Hours of recordkeeping	Total burden
Dispute Records	50	1	50

HRSA specifically requests comments on (1) the necessity and utility of the proposed information collection for the proper performance of the agency's functions; (2) the accuracy of the estimated burden; (3) ways to enhance the quality, utility, and clarity of the information to be collected; and (4) the use of automated collection techniques or other forms of information technology to minimize the information collection burden.

Maria G. Button,

Director, Division of the Executive Secretariat.

[FR Doc. 2019–12894 Filed 6–17–19; 8:45 am]

BILLING CODE 4165–15–P

DEPARTMENT OF HEALTH AND HUMAN SERVICES

Health Resources and Services Administration

Senior Executive Service Performance Review Board

AGENCY: Health Resources and Services Administration (HRSA), Department of Health and Human Services (HHS).

ACTION: Notice.

SUMMARY: HRSA, an Operating Division of HHS, is publishing a list of persons appointed to serve on the Performance Review Board that oversees the evaluation of performance appraisals for Senior Executive Service members within HRSA for the Fiscal Year 2019 and 2020 review period.

FOR FURTHER INFORMATION CONTACT: Georgia Lyons, Executive Resources, Office of Human Resources, 5600 Fishers Lane, Rm. 12N06C, Rockville, Maryland 20857, Telephone (301) 443–4618.

SUPPLEMENTARY INFORMATION: Title 5, U.S.C. 4314(c)(4) of the Civil Service Reform Act of 1978, Public Law 95–454, requires that the appointment of Performance Review Board Members be published in the **Federal Register**. The following are persons appointed to serve on the HRSA Performance Review Board:

Leslie Atkinson
Tonya Bowers
Adriane Burton
Tina Cheatham
Laura Cheever
Natasha Coulouris
Cheryl Dammons
Elizabeth DeVoss
Diana Espinosa
Catherine Ganey
Alexandra Garcia
Heather Hauck
Laura Kavanagh
Martin Kramer
Rimas Liogys
Torey Mack
James Macrae
Susan Monarez
Thomas Morris
Kerry Nesseler
Luis Padilla
Wendy Ponton
Michael Warren

George Sigounas,

Administrator.

[FR Doc. 2019–12819 Filed 6–17–19; 8:45 am]

BILLING CODE 4165–15–P

DEPARTMENT OF HEALTH AND HUMAN SERVICES

Substance Abuse and Mental Health Services Administration, HHS

Meeting of the the Substance Abuse and Mental Health Services Administration's National Advisory Council

AGENCY: Substance Abuse and Mental Health Services Administration, HHS.

ACTION: Notice.

SUMMARY: Notice is hereby given of the meeting on July 1, 2019, of the Substance Abuse and Mental Health Services Administration's (SAMHSA) National Advisory Council (SAMHSA NAC). This notice may publish with less than 15 days prior to the meeting due to a change in schedule for the committee chair and unexpected calendar changes. The meeting is open to the public and can be accessed via telephone only. Agenda with call-in information will be posted on the SAMHSA website prior to the meeting at: *https://www.samhsa.gov/about-us/advisory-councils/meetings.* The meeting will include remarks and dialogue from the Assistant Secretary for Mental Health and Substance Use; updates from the SAMHSA Centers Directors, and a council discussion with SAMHSA NAC members.

DATES: July 1, 2019, 9:00 a.m. to 12:00 p.m. (EDT)/Open.

ADDRESSES: The meeting will be held (virtually) at SAMHSA Headquarters, 5600 Fishers Lane, Rockville, Maryland 20857.

FOR FURTHER INFORMATION CONTACT: Carlos Castillo, Committee Management Officer and Designated Federal Official, SAMHSA National Advisory Council, Room 18E05C, 5600 Fishers Lane, Rockville, Maryland 20857 (mail), Telephone: (240) 276–2787, *Email: carlos.castillo@samhsa.hhs.gov.*

SUPPLEMENTARY INFORMATION: The SAMHSA NAC was established to advise the Secretary, Department of Health and Human Services (HHS), and the Assistant Secretary for Mental Health and Substance Use, SAMHSA, to improve the provision of treatments and related services to individuals with respect to substance use and to improve prevention services, promote mental health, and protect legal rights of individuals with mental illness and individuals who are substance users.

Interested persons may present data, information, or views orally or in writing, on issues pending before the Council. Written submissions must be forwarded to the contact person by June 26, 2019. Oral presentations from the public will be scheduled at the conclusion of the meeting. Individuals interested in making oral presentations must notify the contact person by June 26, 2019. Up to 3 minutes will be allotted for each presentation.

To obtain the call-in number, access code, and/or web access link; submit written or brief oral comments; or request special accommodations for persons with disabilities, please register on-line at: *http://nac.samhsa.gov/Registration/meetingsRegistration.aspx,* or communicate with SAMHSA's Committee Management Officer, CAPT Carlos Castillo.

Meeting information and a roster of Council members may be obtained either by accessing the SAMHSA Council's website at *http://www.samhsa.gov/about-us/advisory-councils/* or by contacting Carlos Castillo.

Council Name: Substance Abuse and Mental Health Services Administration National Advisory Council.

Dated: June 12, 2019.

Carlos Castillo,

Committee Management Officer, SAMHSA.

[FR Doc. 2019–12797 Filed 6–17–19; 8:45 am]

BILLING CODE 4162–20–P

DEPARTMENT OF HOMELAND SECURITY

Federal Emergency Management Agency

[Internal Agency Docket No. FEMA–4421–DR; Docket ID FEMA–2019–0001]

Iowa; Amendment No. 5 to Notice of a Major Disaster Declaration

AGENCY: Federal Emergency Management Agency, DHS.

ACTION: Notice.

SUMMARY: This notice amends the notice of a major disaster declaration for the State of Iowa (FEMA–4421–DR), dated

March 23, 2019, and related determinations.

DATES: This amendment was issued May 7, 2019.

FOR FURTHER INFORMATION CONTACT: Dean Webster, Office of Response and Recovery, Federal Emergency Management Agency, 500 C Street SW, Washington, DC 20472, (202) 646–2833.

SUPPLEMENTARY INFORMATION: The notice of a major disaster declaration for the State of Iowa is hereby amended to include the following area among those areas determined to have been adversely affected by the event declared a major disaster by the President in his declaration of March 23, 2019.

Louisa County for Individual Assistance.

The following Catalog of Federal Domestic Assistance Numbers (CFDA) are to be used for reporting and drawing funds: 97.030, Community Disaster Loans; 97.031, Cora Brown Fund; 97.032, Crisis Counseling; 97.033, Disaster Legal Services; 97.034, Disaster Unemployment Assistance (DUA); 97.046, Fire Management Assistance Grant; 97.048, Disaster Housing Assistance to Individuals and Households In Presidentially Declared Disaster Areas; 97.049, Presidentially Declared Disaster Assistance—Disaster Housing Operations for Individuals and Households; 97.050 Presidentially Declared Disaster Assistance to Individuals and Households—Other Needs; 97.036, Disaster Grants—Public Assistance (Presidentially Declared Disasters); 97.039, Hazard Mitigation Grant.

Pete Gaynor,

Acting Administrator, Federal Emergency Management Agency.

[FR Doc. 2019–12832 Filed 6–17–19; 8:45 am]

BILLING CODE 9111–23–P

DEPARTMENT OF HOMELAND SECURITY

Federal Emergency Management Agency

[Internal Agency Docket No. FEMA–4428–DR; Docket ID FEMA–2019–0001]

Kentucky; Amendment No. 2 to Notice of a Major Disaster Declaration

AGENCY: Federal Emergency Management Agency, DHS.

ACTION: Notice.

SUMMARY: This notice amends the notice of a major disaster declaration for the Commonwealth of Kentucky (FEMA–4428–DR), dated April 17, 2019, and related determinations.

DATES: This amendment was issued May 24, 2019.

FOR FURTHER INFORMATION CONTACT: Dean Webster, Office of Response and Recovery, Federal Emergency Management Agency, 500 C Street SW, Washington, DC 20472, (202) 646–2833.

SUPPLEMENTARY INFORMATION: The notice of a major disaster declaration for the Commonwealth of Kentucky is hereby amended to include the following areas among those areas determined to have been adversely affected by the event declared a major disaster by the President in his declaration of April 17, 2019.

Nicholas and Owen Counties for Public Assistance.

The following Catalog of Federal Domestic Assistance Numbers (CFDA) are to be used for reporting and drawing funds: 97.030, Community Disaster Loans; 97.031, Cora Brown Fund; 97.032, Crisis Counseling; 97.033, Disaster Legal Services; 97.034, Disaster Unemployment Assistance (DUA); 97.046, Fire Management Assistance Grant; 97.048, Disaster Housing Assistance to Individuals and Households In Presidentially Declared Disaster Areas; 97.049, Presidentially Declared Disaster Assistance—Disaster Housing Operations for Individuals and Households; 97.050 Presidentially Declared Disaster Assistance to Individuals and Households—Other Needs; 97.036, Disaster Grants—Public Assistance (Presidentially Declared Disasters); 97.039, Hazard Mitigation Grant.

Pete Gaynor,

Acting Administrator, Federal Emergency Management Agency.

[FR Doc. 2019–12863 Filed 6–17–19; 8:45 am]

BILLING CODE 9111–23–P

DEPARTMENT OF HOMELAND SECURITY

Federal Emergency Management Agency

[Internal Agency Docket No. FEMA–4420–DR; Docket ID FEMA–2019–0001]

Nebraska; Amendment No. 6 to Notice of a Major Disaster Declaration

AGENCY: Federal Emergency Management Agency, DHS.

ACTION: Notice.

SUMMARY: This notice amends the notice of a major disaster declaration for the State of Nebraska (FEMA–4420–DR), dated March 21, 2019, and related determinations.

DATES: This amendment was issued May 6, 2019.

FOR FURTHER INFORMATION CONTACT: Dean Webster, Office of Response and Recovery, Federal Emergency Management Agency, 500 C Street SW, Washington, DC 20472, (202) 646–2833.

SUPPLEMENTARY INFORMATION: The notice of a major disaster declaration for the State of Nebraska is hereby amended to include the following areas among those areas determined to have been adversely affected by the event declared a major disaster by the President in his declaration of March 21, 2019.

Clay, Dawson, Kearney, and Polk Counties for Public Assistance.

Seward and York Counties for Public Assistance [Categories C–G] (already designated for debris removal and emergency protective measures [Categories A and B], including direct federal assistance, under the Public assistance program).

The following Catalog of Federal Domestic Assistance Numbers (CFDA) are to be used for reporting and drawing funds: 97.030, Community Disaster Loans; 97.031, Cora Brown Fund; 97.032, Crisis Counseling; 97.033, Disaster Legal Services; 97.034, Disaster Unemployment Assistance (DUA); 97.046, Fire Management Assistance Grant; 97.048, Disaster Housing Assistance to Individuals and Households In Presidentially Declared Disaster Areas; 97.049, Presidentially Declared Disaster Assistance—Disaster Housing Operations for Individuals and Households; 97.050 Presidentially Declared Disaster Assistance to Individuals and Households—Other Needs; 97.036, Disaster Grants—Public Assistance (Presidentially Declared Disasters); 97.039, Hazard Mitigation Grant.

Pete Gaynor,

Acting Administrator, Federal Emergency Management Agency.

[FR Doc. 2019–12834 Filed 6–17–19; 8:45 am]

BILLING CODE 9111–23–P

DEPARTMENT OF HOMELAND SECURITY

Federal Emergency Management Agency

[Docket ID FEMA–2019–0002; Internal Agency Docket No. FEMA–B–1938]

Proposed Flood Hazard Determinations

AGENCY: Federal Emergency Management Agency, DHS.

ACTION: Notice.

SUMMARY: Comments are requested on proposed flood hazard determinations, which may include additions or modifications of any Base Flood Elevation (BFE), base flood depth, Special Flood Hazard Area (SFHA) boundary or zone designation, or regulatory floodway on the Flood Insurance Rate Maps (FIRMs), and where applicable, in the supporting Flood Insurance Study (FIS) reports for the communities listed in the table below. The purpose of this notice is to seek general information and comment regarding the preliminary FIRM, and where applicable, the FIS report that the Federal Emergency Management Agency

(FEMA) has provided to the affected communities. The FIRM and FIS report are the basis of the floodplain management measures that the community is required either to adopt or to show evidence of having in effect in order to qualify or remain qualified for participation in the National Flood Insurance Program (NFIP). In addition, the FIRM and FIS report, once effective, will be used by insurance agents and others to calculate appropriate flood insurance premium rates for new buildings and the contents of those buildings.

DATES: Comments are to be submitted on or before September 16, 2019.

ADDRESSES: The Preliminary FIRM, and where applicable, the FIS report for each community are available for inspection at both the online location *https://www.fema.gov/preliminaryfloodhazarddata* and the respective Community Map Repository address listed in the tables below. Additionally, the current effective FIRM and FIS report for each community are accessible online through the FEMA Map Service Center at *https://msc.fema.gov* for comparison.

You may submit comments, identified by Docket No. FEMA–B–1938, to Rick Sacbibit, Chief, Engineering Services Branch, Federal Insurance and Mitigation Administration, FEMA, 400 C Street SW, Washington, DC 20472, (202) 646–7659, or (email) *patrick.sacbibit@fema.dhs.gov.*

FOR FURTHER INFORMATION CONTACT: Rick Sacbibit, Chief, Engineering Services Branch, Federal Insurance and Mitigation Administration, FEMA, 400 C Street SW, Washington, DC 20472, (202) 646–7659, or (email) *patrick.sacbibit@fema.dhs.gov;* or visit the FEMA Map Information eXchange (FMIX) online at *https://www.floodmaps.fema.gov/fhm/fmx_main.html.*

SUPPLEMENTARY INFORMATION: FEMA proposes to make flood hazard determinations for each community listed below, in accordance with section 110 of the Flood Disaster Protection Act of 1973, 42 U.S.C. 4104, and 44 CFR 67.4(a).

These proposed flood hazard determinations, together with the floodplain management criteria required by 44 CFR 60.3, are the minimum that are required. They should not be construed to mean that the community must change any existing ordinances that are more stringent in their floodplain management requirements. The community may at any time enact stricter requirements of its own or pursuant to policies established by other Federal, State, or regional entities. These flood hazard determinations are used to meet the floodplain management requirements of the NFIP and are used to calculate the appropriate flood insurance premium rates for new buildings built after the FIRM and FIS report become effective.

The communities affected by the flood hazard determinations are provided in the tables below. Any request for reconsideration of the revised flood hazard information shown on the Preliminary FIRM and FIS report that satisfies the data requirements outlined in 44 CFR 67.6(b) is considered an appeal. Comments unrelated to the flood hazard determinations also will be considered before the FIRM and FIS report become effective.

Use of a Scientific Resolution Panel (SRP) is available to communities in support of the appeal resolution process. SRPs are independent panels of experts in hydrology, hydraulics, and other pertinent sciences established to review conflicting scientific and technical data and provide recommendations for resolution. Use of the SRP only may be exercised after FEMA and local communities have been engaged in a collaborative consultation process for at least 60 days without a mutually acceptable resolution of an appeal. Additional information regarding the SRP process can be found online at *https://www.floodsrp.org/pdfs/srp_overview.pdf.*

The watersheds and/or communities affected are listed in the tables below. The Preliminary FIRM, and where applicable, FIS report for each community are available for inspection at both the online location *https://www.fema.gov/preliminaryfloodhazarddata* and the respective Community Map Repository address listed in the tables. For communities with multiple ongoing Preliminary studies, the studies can be identified by the unique project number and Preliminary FIRM date listed in the tables. Additionally, the current effective FIRM and FIS report for each community are accessible online through the FEMA Map Service Center at *https://msc.fema.gov* for comparison.

(Catalog of Federal Domestic Assistance No. 97.022, ''Flood Insurance.'')

Michael M. Grimm,

Assistant Administrator for Risk Management, Department of Homeland Security, Federal Emergency Management Agency.

Community	Community map repository address
Guadalupe County, Texas and Incorporated Areas Project: 16–06–1113S Preliminary Date: April 7, 2017	
City of Luling	City Hall, 509 East Crockett Street, Luling, TX 78648.

[FR Doc. 2019–12793 Filed 6–17–19; 8:45 am]

BILLING CODE 9110–12–P

DEPARTMENT OF HOMELAND SECURITY

Federal Emergency Management Agency

[Internal Agency Docket No. FEMA–4426–DR; Docket ID FEMA–2019–0001]

Alabama; Amendment No. 1 to Notice of a Major Disaster Declaration

AGENCY: Federal Emergency Management Agency, DHS.

ACTION: Notice.

SUMMARY: This notice amends the notice of a major disaster declaration for the State of Alabama (FEMA–4426–DR), dated April 17, 2019, and related determinations.

DATES: This amendment was issued May 6, 2019.

FOR FURTHER INFORMATION CONTACT: Dean Webster, Office of Response and Recovery, Federal Emergency Management Agency, 500 C Street SW, Washington, DC 20472, (202) 646–2833.

SUPPLEMENTARY INFORMATION: The notice of a major disaster declaration for the

State of Alabama is hereby amended to include the following areas among those areas determined to have been adversely affected by the event declared a major disaster by the President in his declaration of April 17, 2019.

Blount and Greene Counties for Public Assistance.

The following Catalog of Federal Domestic Assistance Numbers (CFDA) are to be used for reporting and drawing funds: 97.030, Community Disaster Loans; 97.031, Cora Brown Fund; 97.032, Crisis Counseling; 97.033, Disaster Legal Services; 97.034, Disaster Unemployment Assistance (DUA); 97.046, Fire Management Assistance Grant; 97.048, Disaster Housing Assistance to Individuals and Households In Presidentially Declared Disaster Areas; 97.049, Presidentially Declared Disaster Assistance—Disaster Housing Operations for Individuals and Households; 97.050 Presidentially Declared Disaster Assistance to Individuals and Households—Other Needs; 97.036, Disaster Grants—Public Assistance (Presidentially Declared Disasters); 97.039, Hazard Mitigation Grant.

Pete Gaynor,

Acting Administrator, Federal Emergency Management Agency.

[FR Doc. 2019–12867 Filed 6–17–19; 8:45 am]

BILLING CODE 9111–23–P

DEPARTMENT OF HOMELAND SECURITY

Federal Emergency Management Agency

[Internal Agency Docket No. FEMA–4337–DR; Docket ID FEMA–2019–0001]

Florida; Amendment No. 17 to Notice of a Major Disaster Declaration

AGENCY: Federal Emergency Management Agency, DHS.

ACTION: Notice.

SUMMARY: This notice amends the notice of a major disaster declaration for State of Florida (FEMA–4337–DR), dated September 10, 2017, and related determinations.

DATES: This change occurred on May 1, 2019.

FOR FURTHER INFORMATION CONTACT: Dean Webster, Office of Response and Recovery, Federal Emergency Management Agency, 500 C Street SW, Washington, DC 20472, (202) 646–2833.

SUPPLEMENTARY INFORMATION: The Federal Emergency Management Agency (FEMA) hereby gives notice that pursuant to the authority vested in the Administrator, under Executive Order 12148, as amended, Gary R. Stanley, of FEMA is appointed to act as the Federal Coordinating Officer for this disaster.

This action terminates the appointment of Thomas J. McCool as Federal Coordinating Officer for this disaster.

The following Catalog of Federal Domestic Assistance Numbers (CFDA) are to be used for reporting and drawing funds: 97.030, Community Disaster Loans; 97.031, Cora Brown Fund; 97.032, Crisis Counseling; 97.033, Disaster Legal Services; 97.034, Disaster Unemployment Assistance (DUA); 97.046, Fire Management Assistance Grant; 97.048, Disaster Housing Assistance to Individuals and Households In Presidentially Declared Disaster Areas; 97.049, Presidentially Declared Disaster Assistance—Disaster Housing Operations for Individuals and Households; 97.050, Presidentially Declared Disaster Assistance to Individuals and Households—Other Needs; 97.036, Disaster Grants—Public Assistance (Presidentially Declared Disasters); 97.039, Hazard Mitigation Grant.

Pete Gaynor,

Acting Administrator, Federal Emergency Management Agency.

[FR Doc. 2019–12827 Filed 6–17–19; 8:45 am]

BILLING CODE 9111–23–P

DEPARTMENT OF HOMELAND SECURITY

Federal Emergency Management Agency

[Internal Agency Docket No. FEMA–4421–DR; Docket ID FEMA–2019–0001]

Iowa; Amendment No. 9 to Notice of a Major Disaster Declaration

AGENCY: Federal Emergency Management Agency, DHS.

ACTION: Notice.

SUMMARY: This notice amends the notice of a major disaster declaration for the State of Iowa (FEMA–4421–DR), dated March 23, 2019, and related determinations.

DATES: This amendment was issued May 17, 2019.

FOR FURTHER INFORMATION CONTACT: Dean Webster, Office of Response and Recovery, Federal Emergency Management Agency, 500 C Street SW, Washington, DC 20472, (202) 646–2833.

SUPPLEMENTARY INFORMATION: Notice is hereby given that the incident period for this disaster is closed effective May 16, 2019.

The following Catalog of Federal Domestic Assistance Numbers (CFDA) are to be used for reporting and drawing funds: 97.030, Community Disaster Loans; 97.031, Cora Brown Fund; 97.032, Crisis Counseling; 97.033, Disaster Legal Services; 97.034, Disaster Unemployment Assistance (DUA); 97.046, Fire Management Assistance Grant; 97.048, Disaster Housing Assistance to Individuals and Households In Presidentially Declared Disaster Areas; 97.049, Presidentially Declared Disaster Assistance—Disaster Housing Operations for Individuals and Households; 97.050, Presidentially Declared Disaster Assistance to Individuals and Households—Other Needs; 97.036, Disaster Grants—Public Assistance (Presidentially Declared Disasters); 97.039, Hazard Mitigation Grant.

Pete Gaynor,

Acting Administrator, Federal Emergency Management Agency.

[FR Doc. 2019–12828 Filed 6–17–19; 8:45 am]

BILLING CODE 9111–23–P

DEPARTMENT OF HOMELAND SECURITY

Federal Emergency Management Agency

[Internal Agency Docket No. FEMA–4432–DR; Docket ID FEMA–2019–0001]

Oregon; Major Disaster and Related Determinations

AGENCY: Federal Emergency Management Agency, DHS.

ACTION: Notice.

SUMMARY: This is a notice of the Presidential declaration of a major disaster for the State of Oregon (FEMA–4432–DR), dated May 2, 2019, and related determinations.

DATES: The declaration was issued May 2, 2019.

FOR FURTHER INFORMATION CONTACT: Dean Webster, Office of Response and Recovery, Federal Emergency Management Agency, 500 C Street SW, Washington, DC 20472, (202) 646–2833.

SUPPLEMENTARY INFORMATION: Notice is hereby given that, in a letter dated May 2, 2019, the President issued a major disaster declaration under the authority of the Robert T. Stafford Disaster Relief and Emergency Assistance Act, 42 U.S.C. 5121 *et seq.* (the ''Stafford Act''), as follows:

I have determined that the damage in certain areas of the State of Oregon resulting from severe winter storms, flooding, landslides, and mudslides during the period of February 23 to February 26, 2019, is of sufficient severity and magnitude to warrant a major disaster declaration under the Robert T. Stafford Disaster Relief and Emergency Assistance Act, 42 U.S.C. 5121 *et seq.* (the ''Stafford Act''). Therefore, I declare that such a major disaster exists in the State of Oregon.

In order to provide Federal assistance, you are hereby authorized to allocate from funds available for these purposes such amounts as you find necessary for Federal disaster assistance and administrative expenses.

You are authorized to provide Public Assistance in the designated areas and

Hazard Mitigation throughout the State. Consistent with the requirement that Federal assistance be supplemental, any Federal funds provided under the Stafford Act for Hazard Mitigation will be limited to 75 percent of the total eligible costs. Federal funds provided under the Stafford Act for Public Assistance also will be limited to 75 percent of the total eligible costs, with the exception of projects that meet the eligibility criteria for a higher Federal cost-sharing percentage under the Public Assistance Alternative Procedures Pilot Program for Debris Removal implemented pursuant to section 428 of the Stafford Act.

Further, you are authorized to make changes to this declaration for the approved assistance to the extent allowable under the Stafford Act.

The Federal Emergency Management Agency (FEMA) hereby gives notice that pursuant to the authority vested in the Administrator, under Executive Order 12148, as amended, Rosalyn L. Cole, of FEMA is appointed to act as the Federal Coordinating Officer for this major disaster.

The following areas of the State of Oregon have been designated as adversely affected by this major disaster:

Coos, Curry, Douglas, Jefferson, and Lane Counties for Public Assistance.

All areas within the State of Oregon are eligible for assistance under the Hazard Mitigation Grant Program.

The following Catalog of Federal Domestic Assistance Numbers (CFDA) are to be used for reporting and drawing funds: 97.030, Community Disaster Loans; 97.031, Cora Brown Fund; 97.032, Crisis Counseling; 97.033, Disaster Legal Services; 97.034, Disaster Unemployment Assistance (DUA); 97.046, Fire Management Assistance Grant; 97.048, Disaster Housing Assistance to Individuals and Households In Presidentially Declared Disaster Areas; 97.049, Presidentially Declared Disaster Assistance—Disaster Housing Operations for Individuals and Households; 97.050, Presidentially Declared Disaster Assistance to Individuals and Households—Other Needs; 97.036, Disaster Grants—Public Assistance (Presidentially Declared Disasters); 97.039, Hazard Mitigation Grant.

Pete Gaynor,

Acting Administrator, Federal Emergency Management Agency.

[FR Doc. 2019–12855 Filed 6–17–19; 8:45 am]

BILLING CODE 9111–23–P

DEPARTMENT OF HOMELAND SECURITY

Federal Emergency Management Agency

[Internal Agency Docket No. FEMA–3412–EM; Docket ID FEMA–2019–0001]

Kansas; Amendment No. 2 to Notice of an Emergency Declaration

AGENCY: Federal Emergency Management Agency, DHS.

ACTION: Notice.

SUMMARY: This notice amends the notice of an emergency declaration for the State of Kansas (FEMA–3412–EM), dated May 28, 2019, and related determinations.

DATES: This amendment was issued May 31, 2019.

FOR FURTHER INFORMATION CONTACT: Dean Webster, Office of Response and Recovery, Federal Emergency Management Agency, 500 C Street SW, Washington, DC 20472, (202) 646–2833.

SUPPLEMENTARY INFORMATION: The notice of an emergency declaration for the State of Kansas is hereby amended to include the following areas among those areas determined to have been adversely affected by the event declared an emergency by the President in his declaration of May 28, 2019.

Allen, Dickinson, Doniphan, Douglas, Geary, Jefferson, Leavenworth, Linn, Lyon, Marshall, Morris, Pottawattamie, Riley, Saline, and Wabaunsee Counties for emergency protective measures (Category B), limited to direct federal assistance, under the Public Assistance program.

The following Catalog of Federal Domestic Assistance Numbers (CFDA) are to be used for reporting and drawing funds: 97.030, Community Disaster Loans; 97.031, Cora Brown Fund; 97.032, Crisis Counseling; 97.033, Disaster Legal Services; 97.034, Disaster Unemployment Assistance (DUA); 97.046, Fire Management Assistance Grant; 97.048, Disaster Housing Assistance to Individuals and Households In Presidentially Declared Disaster Areas; 97.049, Presidentially Declared Disaster Assistance—Disaster Housing Operations for Individuals and Households; 97.050 Presidentially Declared Disaster Assistance to Individuals and Households—Other Needs; 97.036, Disaster Grants—Public Assistance (Presidentially Declared Disasters); 97.039, Hazard Mitigation Grant.

Pete Gaynor,

Acting Administrator, Federal Emergency Management Agency.

[FR Doc. 2019–12854 Filed 6–17–19; 8:45 am]

BILLING CODE 9111–23–P

DEPARTMENT OF HOMELAND SECURITY

Federal Emergency Management Agency

[Internal Agency Docket No. FEMA–4436–DR; Docket ID FEMA–2019–0001]

Navajo Nation; Major Disaster and Related Determinations

AGENCY: Federal Emergency Management Agency, DHS.

ACTION: Notice.

SUMMARY: This is a notice of the Presidential declaration of a major disaster for the Navajo Nation (FEMA–4436–DR), dated May 21, 2019, and related determinations.

DATES: The declaration was issued May 21, 2019.

FOR FURTHER INFORMATION CONTACT: Dean Webster, Office of Response and Recovery, Federal Emergency Management Agency, 500 C Street SW, Washington, DC 20472, (202) 646–2833.

SUPPLEMENTARY INFORMATION: Notice is hereby given that, in a letter dated May 21, 2019, the President issued a major disaster declaration under the authority of the Robert T. Stafford Disaster Relief and Emergency Assistance Act, 42 U.S.C. 5121 *et seq.* (the ''Stafford Act''), as follows:

I have determined that the emergency conditions on the Navajo Nation resulting from a snowstorm and flooding during the period of February 21 to February 24, 2019, is of sufficient severity and magnitude to warrant a major disaster declaration under the Robert T. Stafford Disaster Relief and Emergency Assistance Act, 42 U.S.C. 5121 *et seq.* (the ''Stafford Act''). Therefore, I declare that such a major disaster exists for the Navajo Nation.

In order to provide Federal assistance, you are hereby authorized to allocate from funds available for these purposes such amounts as you find necessary for Federal disaster assistance and administrative expenses.

You are authorized to provide assistance for debris removal and emergency protective measures (Categories A and B) under the Public Assistance program and Hazard Mitigation. You are further authorized to provide snow assistance under the Public Assistance program for a limited period of time during or proximate to the incident period. Consistent with the requirement that Federal assistance be supplemental, any Federal funds provided under the Stafford Act for Hazard Mitigation will be limited to 75 percent of the total eligible costs. Federal funds provided under the Stafford Act for Public Assistance also will be limited to 75 percent of the total eligible costs, with the exception of projects that meet the eligibility criteria for a higher Federal cost-sharing percentage under the Public Assistance Alternative Procedures Pilot Program for

Debris Removal implemented pursuant to Section 428 of the Stafford Act.

Further, you are authorized to make changes to this declaration for the approved assistance to the extent allowable under the Stafford Act.

The Federal Emergency Management Agency (FEMA) hereby gives notice that pursuant to the authority vested in the Administrator, under Executive Order 12148, as amended, Benigno Bern Ruiz, of FEMA is appointed to act as the Federal Coordinating Officer for this major disaster.

The following areas have been designated as adversely affected by this major disaster:

The Navajo Nation for debris removal and emergency protective measures (Categories A and B), including snow assistance under the Public Assistance program.

The Navajo Nation is eligible to apply for assistance under the Hazard Mitigation Grant Program.

The following Catalog of Federal Domestic Assistance Numbers (CFDA) are to be used for reporting and drawing funds: 97.030, Community Disaster Loans; 97.031, Cora Brown Fund; 97.032, Crisis Counseling; 97.033, Disaster Legal Services; 97.034, Disaster Unemployment Assistance (DUA); 97.046, Fire Management Assistance Grant; 97.048, Disaster Housing Assistance to Individuals and Households In Presidentially Declared Disaster Areas; 97.049, Presidentially Declared Disaster Assistance—Disaster Housing Operations for Individuals and Households; 97.050, Presidentially Declared Disaster Assistance to Individuals and Households—Other Needs; 97.036, Disaster Grants—Public Assistance (Presidentially Declared Disasters); 97.039, Hazard Mitigation Grant.

Pete Gaynor,

Acting Administrator, Federal Emergency Management Agency.

[FR Doc. 2019–12860 Filed 6–17–19; 8:45 am]

BILLING CODE 9111–23–P

DEPARTMENT OF HOMELAND SECURITY

Federal Emergency Management Agency

[Internal Agency Docket No. FEMA–4427–DR; Docket ID FEMA–2019–0001]

Tennessee; Amendment No. 1 to Notice of a Major Disaster Declaration

AGENCY: Federal Emergency Management Agency, DHS.

ACTION: Notice.

SUMMARY: This notice amends the notice of a major disaster declaration for the State of Tennessee (FEMA–4427–DR), dated April 17, 2019, and related determinations.

DATES: This amendment was issued May 15, 2019.

FOR FURTHER INFORMATION CONTACT: Dean Webster, Office of Response and Recovery, Federal Emergency Management Agency, 500 C Street SW, Washington, DC 20472, (202) 646–2833.

SUPPLEMENTARY INFORMATION: The notice of a major disaster declaration for the State of Tennessee is hereby amended to include the following areas among those areas determined to have been adversely affected by the event declared a major disaster by the President in his declaration of April 17, 2019.

Anderson, Lawrence, and Loudon Counties for Public Assistance.

The following Catalog of Federal Domestic Assistance Numbers (CFDA) are to be used for reporting and drawing funds: 97.030, Community Disaster Loans; 97.031, Cora Brown Fund; 97.032, Crisis Counseling; 97.033, Disaster Legal Services; 97.034, Disaster Unemployment Assistance (DUA); 97.046, Fire Management Assistance Grant; 97.048, Disaster Housing Assistance to Individuals and Households In Presidentially Declared Disaster Areas; 97.049, Presidentially Declared Disaster Assistance—Disaster Housing Operations for Individuals and Households; 97.050 Presidentially Declared Disaster Assistance to Individuals and Households—Other Needs; 97.036, Disaster Grants—Public Assistance (Presidentially Declared Disasters); 97.039, Hazard Mitigation Grant.

Pete Gaynor,

Acting Administrator, Federal Emergency Management Agency.

[FR Doc. 2019–12864 Filed 6–17–19; 8:45 am]

BILLING CODE 9111–23–P

DEPARTMENT OF HOMELAND SECURITY

Federal Emergency Management Agency

[Internal Agency Docket No. FEMA–4421–DR; Docket ID FEMA–2019–0001]

Iowa; Amendment No. 6 to Notice of a Major Disaster Declaration

AGENCY: Federal Emergency Management Agency, DHS.

ACTION: Notice.

SUMMARY: This notice amends the notice of a major disaster declaration for the State of Iowa (FEMA–4421–DR), dated March 23, 2019, and related determinations.

DATES: This amendment was issued May 8, 2019.

FOR FURTHER INFORMATION CONTACT: Dean Webster, Office of Response and Recovery, Federal Emergency Management Agency, 500 C Street SW, Washington, DC 20472, (202) 646–2833.

SUPPLEMENTARY INFORMATION: The notice of a major disaster declaration for the State of Iowa is hereby amended to include the following areas among those areas determined to have been adversely affected by the event declared a major disaster by the President in his declaration of March 23, 2019.

Carroll, Dickinson, Madison, Mahaska, and Page Counties for Public Assistance [Categories C–G] (already designated for debris removal and emergency protective measures [Categories A and B], including direct federal assistance, under the Public Assistance program).

The following Catalog of Federal Domestic Assistance Numbers (CFDA) are to be used for reporting and drawing funds: 97.030, Community Disaster Loans; 97.031, Cora Brown Fund; 97.032, Crisis Counseling; 97.033, Disaster Legal Services; 97.034, Disaster Unemployment Assistance (DUA); 97.046, Fire Management Assistance Grant; 97.048, Disaster Housing Assistance to Individuals and Households In Presidentially Declared Disaster Areas; 97.049, Presidentially Declared Disaster Assistance—Disaster Housing Operations for Individuals and Households; 97.050, Presidentially Declared Disaster Assistance to Individuals and Households—Other Needs; 97.036, Disaster Grants—Public Assistance (Presidentially Declared Disasters); 97.039, Hazard Mitigation Grant.

Pete Gaynor,

Acting Administrator, Federal Emergency Management Agency.

[FR Doc. 2019–12831 Filed 6–17–19; 8:45 am]

BILLING CODE 9111–23–P

DEPARTMENT OF HOMELAND SECURITY

Federal Emergency Management Agency

[Internal Agency Docket No. FEMA–4428–DR; Docket ID FEMA–2019–0001]

Kentucky; Amendment No. 1 to Notice of a Major Disaster Declaration

AGENCY: Federal Emergency Management Agency, DHS.

ACTION: Notice.

SUMMARY: This notice amends the notice of a major disaster declaration for the Commonwealth of Kentucky (FEMA–4428–DR), dated April 17, 2019, and related determinations.

DATES: This amendment was issued May 8, 2019.

FOR FURTHER INFORMATION CONTACT: Dean Webster, Office of Response and Recovery, Federal Emergency Management Agency, 500 C Street SW, Washington, DC 20472, (202) 646–2833.

SUPPLEMENTARY INFORMATION: The notice of a major disaster declaration for the

Commonwealth of Kentucky is hereby amended to include the following area among those areas determined to have been adversely affected by the event declared a major disaster by the President in his declaration of April 17, 2019.

Fulton County for Public Assistance.

The following Catalog of Federal Domestic Assistance Numbers (CFDA) are to be used for reporting and drawing funds: 97.030, Community Disaster Loans; 97.031, Cora Brown Fund; 97.032, Crisis Counseling; 97.033, Disaster Legal Services; 97.034, Disaster Unemployment Assistance (DUA); 97.046, Fire Management Assistance Grant; 97.048, Disaster Housing Assistance to Individuals and Households In Presidentially Declared Disaster Areas; 97.049, Presidentially Declared Disaster Assistance—Disaster Housing Operations for Individuals and Households; 97.050 Presidentially Declared Disaster Assistance to Individuals and Households—Other Needs; 97.036, Disaster Grants—Public Assistance (Presidentially Declared Disasters); 97.039, Hazard Mitigation Grant.

Pete Gaynor,

Acting Administrator, Federal Emergency Management Agency.

[FR Doc. 2019–12861 Filed 6–17–19; 8:45 am]

BILLING CODE 9111–23–P

DEPARTMENT OF HOMELAND SECURITY

Federal Emergency Management Agency

[Docket ID FEMA–2019–0001; Internal Agency Docket No. FEMA–4434–DR]

California; Major Disaster and Related Determinations

AGENCY: Federal Emergency Management Agency, DHS.

ACTION: Notice.

SUMMARY: This is a notice of the Presidential declaration of a major disaster for the State of California (FEMA–4434–DR), dated May 17, 2019, and related determinations.

DATES: The declaration was issued May 17, 2019.

FOR FURTHER INFORMATION CONTACT: Dean Webster, Office of Response and Recovery, Federal Emergency Management Agency, 500 C Street SW, Washington, DC 20472, (202) 646–2833.

SUPPLEMENTARY INFORMATION: Notice is hereby given that, in a letter dated May 17, 2019, the President issued a major disaster declaration under the authority of the Robert T. Stafford Disaster Relief and Emergency Assistance Act, 42 U.S.C. 5121 *et seq.* (the ''Stafford Act''), as follows:

I have determined that the damage in certain areas of the State of California resulting from severe winter storms, flooding, landslides, and mudslides during the period of February 24 to March 1, 2019, is of sufficient severity and magnitude to warrant a major disaster declaration under the Robert T. Stafford Disaster Relief and Emergency Assistance Act, 42 U.S.C. 5121 *et seq.* (the ''Stafford Act''). Therefore, I declare that such a major disaster exists in the State of California.

In order to provide Federal assistance, you are hereby authorized to allocate from funds available for these purposes such amounts as you find necessary for Federal disaster assistance and administrative expenses.

You are authorized to provide Public Assistance in the designated areas and Hazard Mitigation throughout the State. Consistent with the requirement that Federal assistance be supplemental, any Federal funds provided under the Stafford Act for Hazard Mitigation will be limited to 75 percent of the total eligible costs. Federal funds provided under the Stafford Act for Public Assistance also will be limited to 75 percent of the total eligible costs, with the exception of projects that meet the eligibility criteria for a higher Federal cost-sharing percentage under the Public Assistance Alternative Procedures Pilot Program for Debris Removal implemented pursuant to section 428 of the Stafford Act.

Further, you are authorized to make changes to this declaration for the approved assistance to the extent allowable under the Stafford Act.

The Federal Emergency Management Agency (FEMA) hereby gives notice that pursuant to the authority vested in the Administrator, under Executive Order 12148, as amended, Benigno Bern Ruiz, of FEMA is appointed to act as the Federal Coordinating Officer for this major disaster.

The following areas of the State of California have been designated as adversely affected by this major disaster:

Amador, Butte, Colusa, Del Norte, El Dorado, Glenn, Humboldt, Lake, Marin, Mariposa, Mendocino, Monterey, Napa, Sonoma, Tehama, Trinity, and Tuolumne Counties for Public Assistance.

All areas within the State of California are eligible for assistance under the Hazard Mitigation Grant Program.

The following Catalog of Federal Domestic Assistance Numbers (CFDA) are to be used for reporting and drawing funds: 97.030, Community Disaster Loans; 97.031, Cora Brown Fund; 97.032, Crisis Counseling; 97.033, Disaster Legal Services; 97.034, Disaster Unemployment Assistance (DUA); 97.046, Fire Management Assistance Grant; 97.048, Disaster Housing Assistance to Individuals and Households In Presidentially Declared Disaster Areas; 97.049, Presidentially Declared Disaster Assistance—Disaster Housing Operations for Individuals and Households; 97.050, Presidentially Declared Disaster Assistance to Individuals and Households—Other Needs; 97.036, Disaster Grants—Public Assistance (Presidentially Declared Disasters); 97.039, Hazard Mitigation Grant.

Pete Gaynor,

Acting Administrator, Federal Emergency Management Agency.

[FR Doc. 2019–12927 Filed 6–17–19; 8:45 am]

BILLING CODE 9111–23–P

DEPARTMENT OF HOMELAND SECURITY

Federal Emergency Management Agency

[Internal Agency Docket No. FEMA–4435–DR; Docket ID FEMA–2019–0001]

Missouri; Major Disaster and Related Determinations

AGENCY: Federal Emergency Management Agency, DHS.

ACTION: Notice.

SUMMARY: This is a notice of the Presidential declaration of a major disaster for the State of Missouri (FEMA–4435–DR), dated May 20, 2019, and related determinations.

DATES: The declaration was issued May 20, 2019.

FOR FURTHER INFORMATION CONTACT: Dean Webster, Office of Response and Recovery, Federal Emergency Management Agency, 500 C Street SW, Washington, DC 20472, (202) 646–2833.

SUPPLEMENTARY INFORMATION: Notice is hereby given that, in a letter dated May 20, 2019, the President issued a major disaster declaration under the authority of the Robert T. Stafford Disaster Relief and Emergency Assistance Act, 42 U.S.C. 5121 *et seq.* (the ''Stafford Act''), as follows:

I have determined that the damage in certain areas of the State of Missouri resulting from severe storms, straight-line winds, and flooding during the period of March 11 to April 16, 2019, is of sufficient severity and magnitude to warrant a major disaster declaration under the Robert T. Stafford Disaster Relief and Emergency Assistance Act, 42 U.S.C. 5121 *et seq.* (the ''Stafford Act''). Therefore, I declare that such a major disaster exists in the State of Missouri.

In order to provide Federal assistance, you are hereby authorized to allocate from funds available for these purposes such amounts as you find necessary for Federal disaster assistance and administrative expenses.

You are authorized to provide Public Assistance in the designated areas and Hazard Mitigation throughout the State. Consistent with the requirement that Federal assistance be supplemental, any Federal funds provided under the Stafford Act for Hazard Mitigation will be limited to 75 percent of the total eligible costs. Federal funds provided under the Stafford Act for

Public Assistance also will be limited to 75 percent of the total eligible costs, with the exception of projects that meet the eligibility criteria for a higher Federal cost-sharing percentage under the Public Assistance Alternative Procedures Pilot Program for Debris Removal implemented pursuant to section 428 of the Stafford Act.

Further, you are authorized to make changes to this declaration for the approved assistance to the extent allowable under the Stafford Act.

The Federal Emergency Management Agency (FEMA) hereby gives notice that pursuant to the authority vested in the Administrator, under Executive Order 12148, as amended, Seamus K. Leary, of FEMA is appointed to act as the Federal Coordinating Officer for this major disaster.

The following areas of the State of Missouri have been designated as adversely affected by this major disaster:

Andrew, Atchison, Buchanan, Carroll, Chariton, Holt, Mississippi, New Madrid, Pemiscot, Perry, Platte, Ray, and Ste. Genevieve Counties for Public Assistance.

All areas within the State of Missouri are eligible for assistance under the Hazard Mitigation Grant Program.

The following Catalog of Federal Domestic Assistance Numbers (CFDA) are to be used for reporting and drawing funds: 97.030, Community Disaster Loans; 97.031, Cora Brown Fund; 97.032, Crisis Counseling; 97.033, Disaster Legal Services; 97.034, Disaster Unemployment Assistance (DUA); 97.046, Fire Management Assistance Grant; 97.048, Disaster Housing Assistance to Individuals and Households In Presidentially Declared Disaster Areas; 97.049, Presidentially Declared Disaster Assistance—Disaster Housing Operations for Individuals and Households; 97.050, Presidentially Declared Disaster Assistance to Individuals and Households—Other Needs; 97.036, Disaster Grants—Public Assistance (Presidentially Declared Disasters); 97.039, Hazard Mitigation Grant.

Pete Gaynor,

Acting Administrator, Federal Emergency Management Agency.

[FR Doc. 2019–12858 Filed 6–17–19; 8:45 am]

BILLING CODE 9111–23–P

DEPARTMENT OF HOMELAND SECURITY

Federal Emergency Management Agency

[Internal Agency Docket No. FEMA–4421–DR; Docket ID FEMA–2019–0001]

Iowa; Amendment No. 8 to Notice of a Major Disaster Declaration

AGENCY: Federal Emergency Management Agency, DHS.

ACTION: Notice.

SUMMARY: This notice amends the notice of a major disaster declaration for the State of Iowa (FEMA–4421–DR), dated March 23, 2019, and related determinations.

DATES: This amendment was issued May 10, 2019.

FOR FURTHER INFORMATION CONTACT: Dean Webster, Office of Response and Recovery, Federal Emergency Management Agency, 500 C Street SW, Washington, DC 20472, (202) 646–2833.

SUPPLEMENTARY INFORMATION: The notice of a major disaster declaration for the State of Iowa is hereby amended to include the following area among those areas determined to have been adversely affected by the event declared a major disaster by the President in his declaration of March 23, 2019.

Scott County for Individual Assistance.

The following Catalog of Federal Domestic Assistance Numbers (CFDA) are to be used for reporting and drawing funds: 97.030, Community Disaster Loans; 97.031, Cora Brown Fund; 97.032, Crisis Counseling; 97.033, Disaster Legal Services; 97.034, Disaster Unemployment Assistance (DUA); 97.046, Fire Management Assistance Grant; 97.048, Disaster Housing Assistance to Individuals and Households In Presidentially Declared Disaster Areas; 97.049, Presidentially Declared Disaster Assistance—Disaster Housing Operations for Individuals and Households; 97.050, Presidentially Declared Disaster Assistance to Individuals and Households—Other Needs; 97.036, Disaster Grants—Public Assistance (Presidentially Declared Disasters); 97.039, Hazard Mitigation Grant.

Pete Gaynor,

Acting Administrator, Federal Emergency Management Agency.

[FR Doc. 2019–12829 Filed 6–17–19; 8:45 am]

BILLING CODE 9111–23–P

DEPARTMENT OF HOMELAND SECURITY

Federal Emergency Management Agency

[Internal Agency Docket No. FEMA–4399–DR; Docket ID FEMA–2019–0001]

Florida; Amendment No. 9 to Notice of a Major Disaster Declaration

AGENCY: Federal Emergency Management Agency, DHS.

ACTION: Notice.

SUMMARY: This notice amends the notice of a major disaster declaration for State of Florida (FEMA–4399–DR), dated October 11, 2018, and related determinations.

DATES: This change occurred on May 1, 2019.

FOR FURTHER INFORMATION CONTACT: Dean Webster, Office of Response and Recovery, Federal Emergency Management Agency, 500 C Street SW, Washington, DC 20472, (202) 646–2833.

SUPPLEMENTARY INFORMATION: The Federal Emergency Management Agency (FEMA) hereby gives notice that pursuant to the authority vested in the Administrator, under Executive Order 12148, as amended, Thomas J. Dargan, of FEMA is appointed to act as the Federal Coordinating Officer for this disaster.

This action terminates the appointment of Thomas J. McCool as Federal Coordinating Officer for this disaster.

The following Catalog of Federal Domestic Assistance Numbers (CFDA) are to be used for reporting and drawing funds: 97.030, Community Disaster Loans; 97.031, Cora Brown Fund; 97.032, Crisis Counseling; 97.033, Disaster Legal Services; 97.034, Disaster Unemployment Assistance (DUA); 97.046, Fire Management Assistance Grant; 97.048, Disaster Housing Assistance to Individuals and Households In Presidentially Declared Disaster Areas; 97.049, Presidentially Declared Disaster Assistance—Disaster Housing Operations for Individuals and Households; 97.050, Presidentially Declared Disaster Assistance to Individuals and Households—Other Needs; 97.036, Disaster Grants—Public Assistance (Presidentially Declared Disasters); 97.039, Hazard Mitigation Grant.

Pete Gaynor,

Acting Administrator, Federal Emergency Management Agency.

[FR Doc. 2019–12853 Filed 6–17–19; 8:45 am]

BILLING CODE 9111–23–P

DEPARTMENT OF HOMELAND SECURITY

Federal Emergency Management Agency

[Docket ID FEMA–2019–0002]

Changes in Flood Hazard Determinations

AGENCY: Federal Emergency Management Agency, DHS.

ACTION: Notice.

SUMMARY: New or modified Base (1-percent annual chance) Flood Elevations (BFEs), base flood depths, Special Flood Hazard Area (SFHA) boundaries or zone designations, and/or regulatory floodways (hereinafter referred to as flood hazard determinations) as shown on the indicated Letter of Map Revision (LOMR) for each of the communities listed in the table below are finalized. Each LOMR revises the Flood Insurance

Rate Maps (FIRMs), and in some cases the Flood Insurance Study (FIS) reports, currently in effect for the listed communities. The flood hazard determinations modified by each LOMR will be used to calculate flood insurance premium rates for new buildings and their contents.

DATES: Each LOMR was finalized as in the table below.

ADDRESSES: Each LOMR is available for inspection at both the respective Community Map Repository address listed in the table below and online through the FEMA Map Service Center at *https://msc.fema.gov.*

FOR FURTHER INFORMATION CONTACT: Rick Sacbibit, Chief, Engineering Services Branch, Federal Insurance and Mitigation Administration, FEMA, 400 C Street SW, Washington, DC 20472, (202) 646–7659, or (email) *patrick.sacbibit@fema.dhs.gov;* or visit the FEMA Map Information eXchange (FMIX) online at *https://www.floodmaps.fema.gov/fhm/fmx_main.html.*

SUPPLEMENTARY INFORMATION: The Federal Emergency Management Agency (FEMA) makes the final flood hazard determinations as shown in the LOMRs for each community listed in the table below. Notice of these modified flood hazard determinations has been published in newspapers of local circulation and 90 days have elapsed since that publication. The Deputy Associate Administrator for Insurance and Mitigation has resolved any appeals resulting from this notification.

The modified flood hazard determinations are made pursuant to section 206 of the Flood Disaster Protection Act of 1973, 42 U.S.C. 4105, and are in accordance with the National Flood Insurance Act of 1968, 42 U.S.C. 4001 *et seq.,* and with 44 CFR part 65.

For rating purposes, the currently effective community number is shown and must be used for all new policies and renewals.

The new or modified flood hazard information is the basis for the floodplain management measures that the community is required either to adopt or to show evidence of being already in effect in order to remain qualified for participation in the National Flood Insurance Program (NFIP).

This new or modified flood hazard information, together with the floodplain management criteria required by 44 CFR 60.3, are the minimum that are required. They should not be construed to mean that the community must change any existing ordinances that are more stringent in their floodplain management requirements. The community may at any time enact stricter requirements of its own or pursuant to policies established by other Federal, State, or regional entities.

This new or modified flood hazard determinations are used to meet the floodplain management requirements of the NFIP and are used to calculate the appropriate flood insurance premium rates for new buildings, and for the contents in those buildings. The changes in flood hazard determinations are in accordance with 44 CFR 65.4.

Interested lessees and owners of real property are encouraged to review the final flood hazard information available at the address cited below for each community or online through the FEMA Map Service Center at *https://msc.fema.gov.*

(Catalog of Federal Domestic Assistance No. 97.022, ''Flood Insurance.'')

Michael M. Grimm,

Assistant Administrator for Risk Management, Department of Homeland Security, Federal Emergency Management Agency.

State and county	Location and case No.	Chief executive officer of community	Community map repository	Date of modification	Community No.
Arizona:					
Maricopa (FEMA Docket No.: B–1907).	City of Avondale (18–09–0518P).	The Honorable Kenneth N. Weise, Mayor, City of Avondale, 11465 West Civic Center Drive, Avondale, AZ 85323.	Development & Engineering Services Department, 11465 West Civic Center Drive, Avondale, AZ 85323.	Apr. 19, 2019	040038
Maricopa (FEMA Docket No.: B–1872).	City of Scottsdale (18–09–1514P).	The Honorable W.J. ''Jim'' Lane, Mayor, City of Scottsdale, City Hall, 3939 North Drinkwater Boulevard, Scottsdale, AZ 85251.	Planning Records, 7447 East Indian School Road, Suite 100, Scottsdale, AZ 85251.	Mar. 15, 2019	045012
Maricopa (FEMA Docket No.: B–1872).	Town of Paradise Valley (18–09–1514P).	The Honorable Michael Collins, Mayor, Town of Paradise Valley, 6401 East Lincoln Drive, Paradise Valley, AZ 85253.	Town Hall, 6401 East Lincoln Drive, Paradise Valley, AZ 85253.	Mar. 15, 2019	040049
Maricopa (FEMA Docket No.: B–1907).	Unincorporated Areas of Maricopa County (18–09–0518P).	The Honorable Steve Chucri, Chairman, Board of Supervisors, Maricopa County, 301 West Jefferson Street, 10th Floor, Phoenix, AZ 85003.	Flood Control District of Maricopa County, 2801 West Durango Street, Phoenix, AZ 85009.	Apr. 19, 2019	040037
California:					
Placer (FEMA Docket No.: B–1901).	Unincorporated Areas of Placer County (18–09–2198P).	The Honorable Jim Holmes, Chairman, Board of Supervisors, Placer County, 175 Fulweiler Avenue, Auburn, CA 95603.	Placer County, Department of Public Works, 3091 County Center Drive, Suite 220, Auburn, CA 95603.	Apr. 8, 2019	060239
Riverside (FEMA Docket No.: B–1870).	City of Riverside (18–09–1163P).	The Honorable Rusty Bailey, Mayor, City of Riverside, 3900 Main Street, Riverside, CA 92522.	Planning and Building Department, 3900 Main Street, Riverside, CA 92501.	Feb. 6, 2019	060260
Sacramento (FEMA Docket No.: B–1901).	City of Sacramento (17–09–2500P).	The Honorable Darrell Steinberg, Mayor, City of Sacramento, City Hall, 915 I Street, 5th Floor, Sacramento, CA 95814.	Department of Utilities, Stormwater Program Management, 1395 35th Avenue, Sacramento, CA 95822.	Mar. 25, 2019	060266
Sacramento (FEMA Docket No.: B–1901).	Unincorporated Areas of Sacramento County (17–09–2500P).	The Honorable Susan Peters, Chair, Board of Supervisors, Sacramento County, 700 H Street, Suite 2450, Sacramento, CA 95814.	Sacramento County, Department of Water Resources, 827 7th Street, Suite 301, Sacramento, CA 95814.	Mar. 25, 2019	060262
Santa Clara (FEMA Docket No.: B–1870).	City of San Jose (18–09–1360P).	The Honorable Sam Liccardo, Mayor, City of San Jose, 200 East Santa Clara Street, 18th Floor, San Jose, CA 95113.	Department of Public Works, 200 East Santa Clara Street, 3rd Floor, San Jose, CA 95113.	Mar. 7, 2019	060349
Florida:					

State and county	Location and case No.	Chief executive officer of community	Community map repository	Date of modification	Community No.
Broward (FEMA Docket No.: B–1870).	City of Hollywood (18–04–1751P).	The Honorable Josh Levy, Mayor, City of Hollywood, 2600 Hollywood Boulevard, Room 419, Hollywood, FL 33022.	City Hall, 2600 Hollywood Boulevard, Hollywood, FL 33022.	Feb. 22, 2019	125113
St. Johns (FEMA Docket No.: B–1870).	Unincorporated Areas of St. Johns County (18–04–3472P).	Mr. Henry Dean, Chairman, St. Johns County Board of Commissioners, St. Johns County Administration, 500 San Sebastian View, St. Augustine, FL 32084.	St. Johns County Administration Building, 4020 Lewis Speedway, St. Augustine, FL 32084.	Feb. 28, 2019	125147
St. Johns (FEMA Docket No.: B–1870).	Unincorporated Areas of St. Johns County (18–04–4670P).	Mr. Henry Dean, Chairman, St. Johns County Board of Commissioners, St. Johns County Administration, 500 San Sebastian View, St. Augustine, FL 32084.	St. Johns County Administration Building, 4020 Lewis Speedway, St. Augustine, FL 32084.	Mar. 1, 2019	125147
St. Johns (FEMA Docket No.: B–1872).	Unincorporated Areas of St. Johns County (18–04–6389P).	Mr. Henry Dean, Chairman, St. Johns County Board of Commissioners, 500 San Sebastian View, St. Augustine, FL 32084.	St. Johns County Administration Building, 4020 Lewis Speedway, St. Augustine, FL 32084.	Mar. 20, 2019	125147
St. Johns (FEMA Docket No.: B–1907).	Unincorporated Areas of St. Johns County (18–04–6798P).	Mr. Henry Dean, Chairman, St. Johns County Board of Commissioners, 500 San Sebastian View, St. Augustine, FL 32084.	St. Johns County Administration Building, 4020 Lewis Speedway, St. Augustine, FL 32084.	Apr. 25, 2019	125147
Walton (FEMA Docket No.: B–1907).	Unincorporated Areas of Walton County (18–04–4592P).	Mr. Trey Nick, Commissioner, Walton County, 263 Chaffin Avenue, DeFuniak Springs, FL 32433.	Walton County Courthouse Annex, 47 North 6th Street, DeFuniak Springs, FL 32435.	May 2, 2019	120317
Idaho: Ada (FEMA Docket No.: B–1872).	City of Boise (18–10–0336P).	The Honorable David Bieter, Mayor, City of Boise, P.O. Box 500, Boise, ID 83701.	Planning and Development Services, City Hall, 150 North Capital Boulevard, Boise, ID 83701.	Mar. 11, 2019	160002
Illinois:					
Cook (FEMA Docket No.: B–1872).	Village of Northbrook (18–05–5952P).	The Honorable Sandra E. Frum, Village President, Village of Northbrook, 1225 Cedar Lane, Northbrook, IL 60062.	Public Works Department, Engineering Division, 655 Huehl Road, Northbrook, IL 60062.	Mar. 1, 2019	170132
McHenry (FEMA Docket No.: B–1872).	Unincorporated Areas of McHenry County (18–05–5951P).	The Honorable Jack D. Franks, Chairman, McHenry County Board, McHenry County Government Center, 2200 North Seminary Avenue, Woodstock, IL 60098.	McHenry County Government Center, 2200 North Seminary Avenue, Woodstock, IL 60098.	Mar. 20, 2019	170732
Indiana:					
Allen (FEMA Docket No.: B–1870).	City of Fort Wayne (18–05–2605P).	The Honorable Tom Henry, Mayor, City of Fort Wayne, Citizens Square, 200 East Berry Street, Suite 420, Fort Wayne, IN 46802.	Department of Planning Services, 200 East Berry Street, Suite 150, Fort Wayne, IN 46802.	Feb. 22, 2019	180003
Madison (FEMA Docket No.: B–1872).	City of Anderson (17–05–5967P).	The Honorable Thomas J. Broderick, Jr., Mayor, City of Anderson, Anderson City Building, 120 East 8th Street, Anderson, IN 46016.	City Hall, 120 East 8th Street, Anderson, IN 46016.	Mar. 15, 2019	180150
Madison (FEMA Docket No.: B–1872).	Town of Country Club Heights (17–05–5967P).	The Honorable Carey McLaughlin, Town Manager, Town of County Club Heights, 30 Overlook Drive, Anderson, IN 46011.	Administrative Building, 1202 North Madison Avenue, Anderson, IN 46011.	Mar. 15, 2019	180451
Madison (FEMA Docket No.: B–1872).	Town of Woodlawn Heights (17–05–5967P).	The Honorable Steve Murphy, Town Manager, Town of Woodlawn Heights, P.O. Box 888, Anderson, IN 46015.	Town Hall, 1625 Van Buskirk Road, Anderson, IN 46015.	Mar. 15, 2019	180495
Madison (FEMA Docket No.: B–1872).	Unincorporated Areas of Madison County (17–05–5967P).	The Honorable John Richwine, President, Madison County Board of Commissioners, Government Center, 16 East 9th Street, Anderson, IN 46016.	Madison County, Government Center, 16 East 9th Street, Room 200, Anderson, IN 46016.	Mar. 15, 2019	180442
Kansas:					
Douglas (FEMA Docket No.: B–1907).	City of Lawrence (18–07–0976P).	The Honorable Stuart Boley, Mayor, City of Lawrence, P.O. Box 708, Lawrence, KS 66044.	City Hall, 6 East 6th Street, Lawrence, KS 66044.	Apr. 29, 2019	200090
Douglas (FEMA Docket No.: B–1907).	Unincorporated Areas of Douglas County (18–07–0976P).	Mr. Mike Gaughan, Douglas County Commissioner, 1st District, County Courthouse, 1100 Massachusetts Street, Lawrence, KS 66044.	Douglas County Zoning & Codes Department, 2108 West 27th Street, Suite I, Lawrence, KS 66047.	Apr. 29, 2019	200087
Johnson (FEMA Docket No.: B–1870).	City of Lenexa (18–07–1607P).	The Honorable Michael Boehm, Mayor, City of Lenexa, 8522 Caenen Lake Court, Lenexa, KS 66215.	City Hall, 12350 West 87th Street Parkway, Lenexa, KS 66215.	Mar. 13, 2019	200168
Johnson (FEMA Docket No.: B–1907).	City of Shawnee (18–07–1702P).	The Honorable Michelle Distler, Mayor, City of Shawnee City Hall, 11110 Johnson Drive, Shawnee, KS 66203.	City Hall, 11110 Johnson Drive, Shawnee, KS 66203.	Apr. 17, 2019	200177
Johnson (FEMA Docket No.: B–1907).	City of Shawnee (18–07–2005P).	The Honorable Michelle Distler, Mayor, City of Shawnee City Hall, 11110 Johnson Drive, Shawnee, KS 66203.	City Hall, 11110 Johnson Drive, Shawnee, KS 66203.	Apr. 17, 2019	200177
Johnson (FEMA Docket No.: B–1907).	City of Shawnee (18–07–2117P).	The Honorable Michelle Distler, Mayor, City of Shawnee City Hall, 11110 Johnson Drive, Shawnee, KS 66203.	City Hall, 11110 Johnson Drive, Shawnee, KS 66203.	Apr. 17, 2019	200177
Lyon (FEMA Docket No.: B–1872).	City of Emporia (18–07–1531P).	The Honorable Danny Giefer, Mayor, City of Emporia, P.O. Box 928, Emporia, KS 66801.	Water Department, 104 East 5th Avenue, Emporia, KS 66801.	Mar. 12, 2019	200203

State and county	Location and case No.	Chief executive officer of community	Community map repository	Date of modification	Community No.
Massachusetts:					
Middlesex (FEMA Docket No.: B–1907).	City of Lowell (18–01–1941P).	The Honorable William Samaras, Mayor, City of Lowell City Hall, 375 Merrimack Street, Lowell, MA 01852.	City Hall, 375 Merrimack Street, Lowell, MA 01852.	May 9, 2019	250201
Middlesex (FEMA Docket No.: B–1907).	Town of Dracut (18–01–1941P).	The Honorable Jesse Forcier, Chairman, Town of Dracut Board of Selectmen, Town Hall, 62 Arlington Street, Dracut, MA 01826.	Town Hall, 62 Arlington Street, Dracut, MA 01826.	May 9, 2019	250190
Middlesex (FEMA Docket No.: B–1907).	Town of Tewksbury (18–01–1941P).	The Honorable Jay J. Kelly, Chairman, Town of Tewksbury Board of Selectmen, Town Hall, 1009 Main Street, 2nd Floor, Tewksbury, MA 01876.	Town Hall, 1009 Main Street, Tewksbury, MA 01876.	May 9, 2019	250218
Michigan:					
Macomb (FEMA Docket No.: B–1901).	City of Sterling Heights (18–05–4204P).	The Honorable Michael C. Taylor, Mayor, City of Sterling Heights, P.O. Box 8009, Sterling Heights, MI 48311.	City Hall, 40555 Utica Road, Sterling Heights, MI 48311.	Mar. 21, 2019	260128
Ottawa (FEMA Docket No.: B–1901).	City of Hudsonville (18–05–4330P).	The Honorable Mark Northrup, Mayor, City of Hudsonville, 3275 Central Boulevard, Hudsonville, MI 49426.	City Hall, 3275 Central Boulevard, Hudsonville, MI 49426.	Mar. 28, 2019	260493
Minnesota:					
Carver (FEMA Docket No.: B–1872).	City of Waconia (18–05–4974P).	The Honorable Jim Sanborn, Mayor, City of Waconia City Hall, 201 South Vine Street, Waconia, MN 55387.	City Hall, 201 South Vine Street, Waconia, MN 55387.	Dec. 26, 2018	270055
Washington (FEMA Docket No.: B–1870).	City of Lake Elmo (18–05–3738P).	The Honorable Mike Pearson, Mayor, City of Lake Elmo, 2805 Lisbon Avenue North, Lake Elmo, MN 55042.	City Hall, 3800 Laverne Avenue, Lake Elmo, MN 55042.	Mar. 7, 2019	270505
Nebraska:					
Cass (FEMA Docket No.: B–1907).	City of Louisville (18–07–0041P).	The Honorable Roger Behrns, Mayor, City of Louisville, P.O. Box 370, Louisville, NE 68037.	City Hall, 210 Main Street, Louisville, NE 68037.	May 3, 2019	310031
Lancaster (FEMA Docket No.: B–1901).	City of Waverly (18–07–0490P).	The Honorable Mike Werner, Mayor, City of Waverly, P.O. Box 427, Waverly, NE 68462.	City Hall, 14130 Lancashire, Waverly, NE 68462.	Apr. 26, 2019	310140
Nevada:					
Clark (FEMA Docket No.: B–1872).	City of North Las Vegas (18–09–0886P).	The Honorable John J. Lee, Mayor, City of North Las Vegas, 2250 Las Vegas Boulevard North, North Las Vegas, NV 89030.	Public Works Department, 2200 Civic Center Drive, North Las Vegas, NV 89030.	Mar. 12, 2019	320007
Douglas (FEMA Docket No.: B–1907).	Unincorporated Areas of Douglas County (18–09–1883P).	The Honorable Steve Thaler, Chairman, Board of Commissioners Douglas County, P.O. Box 218, Minden, NV 89423.	Douglas County Community Development, 1594 Esmeralda Avenue, Minden, NV 89423.	May 3, 2019	320008
New Jersey:					
Monmouth (FEMA Docket No.: B–1872).	Borough of Atlantic Highlands (18–02–1965P).	The Honorable Rhonda Le Grice, Mayor, Borough of Atlantic Highlands Borough Hall, 100 1st Avenue, Atlantic Highlands, NJ 07716.	Borough Hall, 100 1st Avenue, Atlantic Highlands, NJ 07716.	Mar. 21, 2019	340286
Monmouth (FEMA Docket No.: B–1872).	Borough of Highlands (18–02–1965P).	The Honorable Rick O'Neil, Mayor, Borough of Highlands Administrative Offices, 42 Shore Drive, Highlands, NJ 07732.	Municipal Office, 42 Shore Drive, Highlands, NJ 07732.	Mar. 21, 2019	345297
New York: Westchester (FEMA Docket No.: B–1872).	City of Rye (18–02–1994P).	The Honorable Josh Cohn, Mayor, City of Rye, 1051 Boston Post Road, Rye, NY 10580.	City Hall, 1051 Boston Post Road, Rye, NY 10580.	May 2, 2019	360931
Ohio: Montgomery (FEMA Docket No.: B–1907).	City of Englewood (18–05–6276P).	Mr. William J. Singer, Development Director City of Englewood, 333 West National Road, Englewood, OH 45322.	Government Center, 333 West National Road, Englewood, OH 45322.	May 6, 2019	390828
Oregon:					
Benton (FEMA Docket No.: B–1901).	Unincorporated Areas of Benton County (18–10–0715P).	The Honorable Xanthippe Augerot, Chair, Benton County Board of Commissioners, P.O. Box 3020, Corvallis, OR 97339.	Benton County Sheriff's Office, 180 Northwest 5th Street, Corvallis, OR 97333.	Mar. 28, 2019	410008
Marion (FEMA Docket No.: B–1907).	City of Salem (18–10–1215P).	The Honorable Chuck Bennett, Mayor, City of Salem City Hall, 555 Liberty Street Southeast, Room 220, Salem, OR 97301.	Public Works Department, 555 Liberty Street Southeast, Room 325, Salem, OR 97301.	May 9, 2019	410167
Marion (FEMA Docket No.: B–1907).	Unincorporated Areas of Marion County (18–10–1215P).	Ms. Janet Carlson, Chair, Marion County Board of Commissioners, P.O. Box 14500, Salem, OR 97309.	Marion County Department of Planning, 3150 Lancaster Drive Northeast, Salem, OR 97305.	May 9, 2019	410154
Washington (FEMA Docket No.: B–1907).	City of Hillsboro (18–10–0728P).	The Honorable Steve Callaway, Mayor, City of Hillsboro, Civic Center Building, 150 East Main Street, Hillsboro, OR 97123.	City Hall, 150 East Main Street, Hillsboro, OR 97123.	Apr. 25, 2019	410243
Washington (FEMA Docket No.: B–1907).	Unincorporated Areas of Washington County (18–10–0728P).	The Honorable Roy Rogers, Mayor, Washington County, 155 North 1st Avenue, Hillsboro, OR 97124.	Washington County Department of Land Use and Transportation, 155 North 1st Avenue, Suite 350, Hillsboro, OR 97124.	Apr. 25, 2019	410238
Texas:					

State and county	Location and case No.	Chief executive officer of community	Community map repository	Date of modification	Community No.
Hays (FEMA Docket No.: B–1901).	City of San Marcos (18–06–1845P).	The Honorable John Thomaides, Mayor, City of San Marcos, City Hall, 630 East Hopkins Street, San Marcos, TX 78666.	Engineering Department, City Hall, 630 East Hopkins Street, San Marcos, TX 78666.	Apr. 4, 2019	485505
Hays (FEMA Docket No.: B–1901).	Unincorporated Areas of Hays County (18–06–1845P).	The Honorable Bert Cobb, M.D., County Judge, Hays County, Hays County Courthouse, 111 East San Antonio Street, Suite 300, San Marcos, TX 78666.	Hays County Development Services Department, 2171 Yarrington Road, San Marcos, TX 78666.	Apr. 4, 2019	480321
Virginia:					
Fairfax (FEMA Docket No.: B–1901).	Unincorporated Areas of Fairfax County (18–03–1394P).	The Honorable David L. Meyer, Mayor, Fairfax County, 10455 Armstrong Street, Fairfax, VA 22030.	Fairfax County Community Map Repository/Stormwater Planning, 12000 Government Center Parkway, Suite 449, Fairfax, VA 22035.	Apr. 9, 2019	515525
Fairfax (FEMA Docket No.: B–1907).	Unincorporated Areas of Fairfax County (18–03–1475P).	The Honorable Sharon Bulova, Chairman, Fairfax County Board of Supervisors, 12000 Government Center Parkway, Suite 552, Fairfax, VA 22035.	Fairfax County Community Map Repository/Stormwater Planning, 12000 Government Center Parkway, Suite 449, Fairfax, VA 22035.	Apr. 11, 2019	515525
Fairfax (FEMA Docket No.: B–1870).	Unincorporated Areas of Fairfax County (18–03–1811P).	Mr. Bryan J. Hill, County Executive, 12000 Government Center Parkway, Suite 552, Fairfax, VA 22035.	Fairfax County Community Map Repository/Stormwater Planning, 12000 Government Center Parkway, Suite 449, Fairfax, VA 22035.	Mar. 6, 2019	515525
Washington:					
Grays Harbor (FEMA Docket No.: B–1907).	City of Aberdeen (18–10–0100P).	The Honorable Erik Larson, Mayor, City of Aberdeen, City Hall, 200 East Market Street, Aberdeen, WA 98520.	City Hall, 200 East Market Street, Aberdeen, WA 98520.	Apr. 19, 2019	530058
Grays Harbor (FEMA Docket No.: B–1907).	Unincorporated Areas of Grays Harbor County (18–10–0100P).	Ms. Vickie Raines, Commissioner, Grays Harbor County Administration Building, 100 West Broadway, Suite 1, Montesano, WA 98563.	Grays Harbor Administration Building, 100 West Broadway, Suite 31, Montesano, WA 98563.	Apr. 19, 2019	530057
Pierce (FEMA Docket No.: B–1901).	City of Puyallup (18–10–0841P).	The Honorable John Palmer, Mayor, City of Puyallup, City Hall, 333 South Meridian, Puyallup, WA 98371.	City Hall, 333 South Meridian, Puyallup, WA 98371.	Apr. 4, 2019	530144
Pierce (FEMA Docket No.: B–1907).	City of Tacoma (18–10–1374P).	The Honorable Victoria Woodards, Mayor, City of Tacoma, 747 Market Street, 12th Floor, Tacoma, WA 98402.	Municipal Building, 747 Market Street, Tacoma, WA 98402.	Apr. 25, 2019	530148
Pierce (FEMA Docket No.: B–1901).	Unincorporated Areas of Pierce County (18–10–0476P).	Mr. Bruce Dammeier, County Executive, Pierce County, 930 Tacoma Avenue South, Room 737, Tacoma, WA 98402.	Pierce County Annex Building, 2401 South 35th Street, Tacoma, WA 98409.	Mar. 27, 2019	530138
Spokane (FEMA Docket No.: B–1872).	City of Spokane Valley (18–10–1264P).	The Honorable Rod Higgins, Mayor, City of Spokane Valley, City Hall, 10210 East Sprague Avenue, Spokane Valley, WA 99206.	City Hall, 10210 East Sprague Avenue, Spokane Valley, WA 99206.	Mar. 15, 2019	530342
Yakima (FEMA Docket No.: B–1907).	Unincorporated Areas of Yakima County (18–10–0191P).	The Honorable Ron Anderson, Chairman, Board of Yakima County Commissioners, Yakima County Courthouse, 128 North 2nd Street, Room 232, Yakima, WA 98901.	Yakima County Public Services, 128 North 2nd Street, Yakima, WA 98901.	Apr. 5, 2019	530217
Wisconsin:					
Dodge (FEMA Docket No.: B–1872).	City of Watertown (18–05–4306P).	The Honorable John David, Mayor, City of Watertown, P.O. Box 477, Watertown, WI 53094.	City Hall, 106 Jones Street, Watertown, WI 53094.	Feb. 26, 2019	550107
Winnebago (FEMA Docket No.: B–1901).	City of Oshkosh (18–05–2015P).	The Honorable Steve Cummings, Mayor, City of Oshkosh, City Hall, P.O. Box 1130, Oshkosh, WI 54903.	City Hall, 215 Church Avenue, Oshkosh, WI 54903.	Mar. 27, 2019	550511
Winnebago (FEMA Docket No.: B–1901).	Unincorporated Area of Winnebago County (18–05–2015P).	Mr. Mark Harris, Executive, Winnebago County, County Courthouse, 415 Jackson Street, Oshkosh, WI 54901.	Winnebago County Zoning Department, 448 Algoma Boulevard, Oshkosh, WI 54901.	Mar. 27, 2019	550537

[FR Doc. 2019–12792 Filed 6–17–19; 8:45 am]

BILLING CODE 9110–12–P

DEPARTMENT OF HOMELAND SECURITY

Federal Emergency Management Agency

[Internal Agency Docket No. FEMA–4437–DR; Docket ID FEMA–2019–0001]

Montana; Major Disaster and Related Determinations

AGENCY: Federal Emergency Management Agency, DHS.

ACTION: Notice.

SUMMARY: This is a notice of the Presidential declaration of a major disaster for the State of Montana (FEMA–4437–DR), dated May 24, 2019, and related determinations.

DATES: The declaration was issued May 24, 2019.

FOR FURTHER INFORMATION CONTACT: Dean Webster, Office of Response and Recovery, Federal Emergency Management Agency, 500 C Street SW, Washington, DC 20472, (202) 646–2833.

SUPPLEMENTARY INFORMATION: Notice is hereby given that, in a letter dated May 24, 2019, the President issued a major disaster declaration under the authority of the Robert T. Stafford Disaster Relief and Emergency Assistance Act, 42 U.S.C. 5121 *et seq.* (the ''Stafford Act''), as follows:

I have determined that the damage in certain areas of the State of Montana resulting from flooding during the period of March 20 to April 10, 2019, is of sufficient severity and magnitude to warrant a major disaster declaration under the Robert T. Stafford Disaster Relief and Emergency Assistance Act, 42 U.S.C. 5121 *et seq.* (the ''Stafford Act''). Therefore, I declare that such a major disaster exists in the State of Montana.

In order to provide Federal assistance, you are hereby authorized to allocate from funds available for these purposes such amounts as you find necessary for Federal disaster assistance and administrative expenses.

You are authorized to provide Public Assistance in the designated areas and Hazard Mitigation throughout the State. Consistent with the requirement that Federal assistance be supplemental, any Federal funds provided under the Stafford Act for Hazard Mitigation will be limited to 75 percent of the total eligible costs. Federal funds provided under the Stafford Act for Public Assistance also will be limited to 75 percent of the total eligible costs, with the exception of projects that meet the eligibility criteria for a higher Federal cost-sharing percentage under the Public Assistance Alternative Procedures Pilot Program for Debris Removal implemented pursuant to section 428 of the Stafford Act.

Further, you are authorized to make changes to this declaration for the approved assistance to the extent allowable under the Stafford Act.

The Federal Emergency Management Agency (FEMA) hereby gives notice that pursuant to the authority vested in the Administrator, under Executive Order 12148, as amended, Nathan Knapp, of FEMA is appointed to act as the Federal Coordinating Officer for this major disaster.

The following areas of the State of Montana have been designated as adversely affected by this major disaster:

Daniels, Lake, McCone, Park, Powder River, Stillwater, Treasure, and Valley for Public Assistance.

All areas within the State of Montana are eligible for assistance under the Hazard Mitigation Grant Program.

The following Catalog of Federal Domestic Assistance Numbers (CFDA) are to be used for reporting and drawing funds: 97.030, Community Disaster Loans; 97.031, Cora Brown Fund; 97.032, Crisis Counseling; 97.033, Disaster Legal Services; 97.034, Disaster Unemployment Assistance (DUA); 97.046, Fire Management Assistance Grant; 97.048, Disaster Housing Assistance to Individuals and Households In Presidentially Declared Disaster Areas; 97.049, Presidentially Declared Disaster Assistance—Disaster Housing Operations for Individuals and Households; 97.050, Presidentially Declared Disaster Assistance to Individuals and Households—Other Needs; 97.036, Disaster Grants—Public Assistance (Presidentially Declared Disasters); 97.039, Hazard Mitigation Grant.

Pete Gaynor,

Acting Administrator, Federal Emergency Management Agency.

[FR Doc. 2019–12862 Filed 6–17–19; 8:45 am]

BILLING CODE 9111–23–P

DEPARTMENT OF HOMELAND SECURITY

Federal Emergency Management Agency

[Internal Agency Docket No. FEMA–4421–DR; Docket ID FEMA–2019–0001]

Iowa; Amendment No. 7 to Notice of a Major Disaster Declaration

AGENCY: Federal Emergency Management Agency, DHS.

ACTION: Notice.

SUMMARY: This notice amends the notice of a major disaster declaration for the State of Iowa (FEMA–4421–DR), dated March 23, 2019, and related determinations.

DATES: This amendment was issued May 8, 2019.

FOR FURTHER INFORMATION CONTACT: Dean Webster, Office of Response and Recovery, Federal Emergency Management Agency, 500 C Street SW, Washington, DC 20472, (202) 646–2833.

SUPPLEMENTARY INFORMATION: The notice of a major disaster declaration for the State of Iowa is hereby amended to include the following areas among those areas determined to have been adversely affected by the event declared a major disaster by the President in his declaration of March 23, 2019.

Adams and Palo Alto Counties for Public Assistance.

Fayette, Hamilton, and Webster Counties for Public Assistance [Categories C–G] (already designated for debris removal and emergency protective measures [Categories A and B], including direct federal assistance, under the Public Assistance program).

The following Catalog of Federal Domestic Assistance Numbers (CFDA) are to be used for reporting and drawing funds: 97.030, Community Disaster Loans; 97.031, Cora Brown Fund; 97.032, Crisis Counseling; 97.033, Disaster Legal Services; 97.034, Disaster Unemployment Assistance (DUA); 97.046, Fire Management Assistance Grant; 97.048, Disaster Housing Assistance to Individuals and Households In Presidentially Declared Disaster Areas; 97.049, Presidentially Declared Disaster Assistance—Disaster Housing Operations for Individuals and Households; 97.050, Presidentially Declared Disaster Assistance to Individuals and Households—Other Needs; 97.036, Disaster Grants—Public Assistance (Presidentially Declared Disasters); 97.039, Hazard Mitigation Grant.

Pete Gaynor,

Acting Administrator, Federal Emergency Management Agency.

[FR Doc. 2019–12830 Filed 6–17–19; 8:45 am]

BILLING CODE 9111–23–P

DEPARTMENT OF HOMELAND SECURITY

Federal Emergency Management Agency

[Internal Agency Docket No. FEMA–3412–EM; Docket ID FEMA–2019–0001]

Kansas; Amendment No. 1 to Notice of an Emergency Declaration

AGENCY: Federal Emergency Management Agency, DHS.

ACTION: Notice.

SUMMARY: This notice amends the notice of an emergency declaration for the State of Kansas (FEMA–3412–EM), dated May 28, 2019, and related determinations.

DATES: This amendment was issued May 31, 2019.

FOR FURTHER INFORMATION CONTACT: Dean Webster, Office of Response and Recovery, Federal Emergency Management Agency, 500 C Street SW, Washington, DC 20472, (202) 646–2833.

SUPPLEMENTARY INFORMATION: Notice is hereby given that the incident for this emergency has been expanded to include tornadoes.

(The following Catalog of Federal Domestic Assistance Numbers (CFDA) are to be used for reporting and drawing funds: 97.030, Community Disaster Loans; 97.031, Cora Brown Fund; 97.032, Crisis Counseling; 97.033, Disaster Legal Services; 97.034, Disaster Unemployment Assistance (DUA); 97.046, Fire Management Assistance Grant; 97.048, Disaster Housing Assistance to Individuals and Households In Presidential Declared Disaster Areas; 97.049, Presidential Declared Disaster Assistance—Disaster Housing Operations for Individuals and Households; 97.050, Presidential Declared Disaster Assistance to Individuals and Households—Other Needs; 97.036, Disaster Grants—Public Assistance (Presidentially Declared Disasters); 97.039, Hazard Mitigation Grant.

Pete Gaynor,

Acting Administrator, Federal Emergency Management Agency.

[FR Doc. 2019–12856 Filed 6–17–19; 8:45 am]

BILLING CODE 9111–23–P

DEPARTMENT OF HOMELAND SECURITY

Federal Emergency Management Agency

[Internal Agency Docket No. FEMA–4421–DR; Docket ID FEMA–2019–0001]

Iowa; Amendment No. 4 to Notice of a Major Disaster Declaration

AGENCY: Federal Emergency Management Agency, DHS.

ACTION: Notice.

SUMMARY: This notice amends the notice of a major disaster declaration for the State of Iowa (FEMA–4421–DR), dated March 23, 2019, and related determinations.

DATES: This amendment was issued May 6, 2019.

FOR FURTHER INFORMATION CONTACT: Dean Webster, Office of Response and Recovery, Federal Emergency Management Agency, 500 C Street SW, Washington, DC 20472, (202) 646–2833.

SUPPLEMENTARY INFORMATION: The notice of a major disaster declaration for the State of Iowa is hereby amended to include the following areas among those areas determined to have been adversely affected by the event declared a major disaster by the President in his declaration of March 23, 2019.

Allamakee, Audubon, Bremer, Clay, Decatur, Hancock, Hardin, Howard, Humboldt, Iowa, Montgomery, Pocahontas, and Sac Counties for Public Assistance [Categories C–G] (already designated for debris removal and emergency protective measures [Categories A and B], including direct federal assistance, under the Public Assistance program).

The following Catalog of Federal Domestic Assistance Numbers (CFDA) are to be used for reporting and drawing funds: 97.030, Community Disaster Loans; 97.031, Cora Brown Fund; 97.032, Crisis Counseling; 97.033, Disaster Legal Services; 97.034, Disaster Unemployment Assistance (DUA); 97.046, Fire Management Assistance Grant; 97.048, Disaster Housing Assistance to Individuals and Households In Presidentially Declared Disaster Areas; 97.049, Presidentially Declared Disaster Assistance—Disaster Housing Operations for Individuals and Households; 97.050, Presidentially Declared Disaster Assistance to Individuals and Households—Other Needs; 97.036, Disaster Grants—Public Assistance (Presidentially Declared Disasters); 97.039, Hazard Mitigation Grant.

Pete Gaynor,

Acting Administrator, Federal Emergency Management Agency.

[FR Doc. 2019–12833 Filed 6–17–19; 8:45 am]

BILLING CODE 9111–23–P

DEPARTMENT OF HOMELAND SECURITY

Federal Emergency Management Agency

[Internal Agency Docket No. FEMA–4425–DR; Docket ID FEMA–2019–0001]

Soboba Band of Luiseño Indians; Amendment No. 1 to Notice of a Major Disaster Declaration

AGENCY: Federal Emergency Management Agency, DHS.

ACTION: Notice.

SUMMARY: This notice amends the notice of a major disaster declaration for the Soboba Band of Luiseño Indians (FEMA–4425–DR), dated April 8, 2019, and related determinations.

DATES: This change occurred on May 9, 2019.

FOR FURTHER INFORMATION CONTACT: Dean Webster, Office of Response and Recovery, Federal Emergency Management Agency, 500 C Street SW, Washington, DC 20472, (202) 646–2833.

SUPPLEMENTARY INFORMATION: The Federal Emergency Management Agency (FEMA) hereby gives notice that pursuant to the authority vested in the Administrator, under Executive Order 12148, as amended, Benigno Bern Ruiz, of FEMA is appointed to act as the Federal Coordinating Officer for this disaster.

This action terminates the appointment of Mark Wingate as Federal Coordinating Officer for this disaster.

The following Catalog of Federal Domestic Assistance Numbers (CFDA) are to be used for reporting and drawing funds: 97.030, Community Disaster Loans; 97.031, Cora Brown Fund; 97.032, Crisis Counseling; 97.033, Disaster Legal Services; 97.034, Disaster Unemployment Assistance (DUA); 97.046, Fire Management Assistance Grant; 97.048, Disaster Housing Assistance to Individuals and Households In Presidentially Declared Disaster Areas; 97.049, Presidentially Declared Disaster Assistance—Disaster Housing Operations for Individuals and Households; 97.050, Presidentially Declared Disaster Assistance to Individuals and Households—Other Needs; 97.036, Disaster Grants—Public Assistance (Presidentially Declared Disasters); 97.039, Hazard Mitigation Grant.

Pete Gaynor,

Acting Administrator, Federal Emergency Management Agency.

[FR Doc. 2019–12868 Filed 6–17–19; 8:45 am]

BILLING CODE 9111–23–P

DEPARTMENT OF HOMELAND SECURITY

Federal Emergency Management Agency

[Internal Agency Docket No. FEMA–4422–DR; Docket ID FEMA–2019–0001]

La Jolla Band of Luiseño Indians; Amendment No. 1 to Notice of a Major Disaster Declaration

AGENCY: Federal Emergency Management Agency, DHS.

ACTION: Notice.

SUMMARY: This notice amends the notice of a major disaster declaration for the La Jolla Band of Luiseño Indians (FEMA–4422–DR), dated March 26, 2019, and related determinations.

DATES: This change occurred on May 9, 2019.

FOR FURTHER INFORMATION CONTACT: Dean Webster, Office of Response and Recovery, Federal Emergency Management Agency, 500 C Street SW, Washington, DC 20472, (202) 646–2833.

SUPPLEMENTARY INFORMATION: The Federal Emergency Management Agency (FEMA) hereby gives notice that pursuant to the authority vested in the Administrator, under Executive Order 12148, as amended, Benigno Bern Ruiz, of FEMA is appointed to act as the Federal Coordinating Officer for this disaster.

This action terminates the appointment of Mark Wingate as Federal Coordinating Officer for this disaster.

The following Catalog of Federal Domestic Assistance Numbers (CFDA) are to be used for reporting and drawing funds: 97.030, Community Disaster Loans; 97.031, Cora Brown Fund; 97.032, Crisis Counseling; 97.033, Disaster Legal Services; 97.034, Disaster Unemployment Assistance (DUA); 97.046, Fire Management Assistance Grant; 97.048, Disaster Housing Assistance to Individuals and Households In Presidentially Declared Disaster Areas; 97.049, Presidentially Declared Disaster Assistance—Disaster Housing Operations for Individuals and Households; 97.050, Presidentially Declared Disaster Assistance to Individuals and Households—Other Needs; 97.036, Disaster Grants—Public Assistance (Presidentially Declared Disasters); 97.039, Hazard Mitigation Grant.

Pete Gaynor,

Acting Administrator, Federal Emergency Management Agency.

[FR Doc. 2019–12875 Filed 6–17–19; 8:45 am]

BILLING CODE 9111–23–P

DEPARTMENT OF HOMELAND SECURITY

Federal Emergency Management Agency

[Internal Agency Docket No. FEMA–4399–DR; Docket ID FEMA–2019–0001]

Florida; Amendment No. 10 to Notice of a Major Disaster Declaration

AGENCY: Federal Emergency Management Agency, DHS.

ACTION: Notice.

SUMMARY: This notice amends the notice of a major disaster for the State of Florida (FEMA–4399–DR), dated October 11, 2018, and related determinations.

DATES: This amendment was issued May 17, 2019.

FOR FURTHER INFORMATION CONTACT: Dean Webster, Office of Response and Recovery, Federal Emergency Management Agency, 500 C Street SW, Washington, DC 20472, (202) 646–2833.

SUPPLEMENTARY INFORMATION: Notice is hereby given that, in a letter dated May 17, 2019, the President amended the cost-sharing arrangements regarding Federal funds provided under the authority of the Robert T. Stafford Disaster Relief and Emergency Assistance Act, 42 U.S.C. 5121 *et seq.* (the ''Stafford Act''), in a letter to Pete Gaynor, Acting Administrator, Federal Emergency Management Agency, Department of Homeland Security, under Executive Order 12148, as follows:

I have determined that the damage in certain areas of the State of Florida resulting from Hurricane Michael during the period of October 7 to October 19, 2018, is of sufficient severity and magnitude that special cost-sharing arrangements are warranted regarding Federal funds provided under the Robert T. Stafford Disaster Relief and Emergency Assistance Act, 42 U.S.C. 5121 *et seq.* (the ''Stafford Act'').

Therefore, I amend my declarations of October 11, 2018, October 14, 2018, and March 9, 2019, to authorize Federal funds for debris removal and emergency protective measures (Categories A and B), including direct Federal assistance, under the Public Assistance program at 90 percent of total eligible costs, except for assistance previously approved at 100 percent.

(The following Catalog of Federal Domestic Assistance Numbers (CFDA) are to be used for reporting and drawing funds: 97.030, Community Disaster Loans; 97.031, Cora Brown Fund; 97.032, Crisis Counseling; 97.033, Disaster Legal Services; 97.034, Disaster Unemployment Assistance (DUA); 97.046, Fire Management Assistance Grant; 97.048, Disaster Housing Assistance to Individuals and Households In Presidentially Declared Disaster Areas; 97.049, Presidentially Declared Disaster Assistance—Disaster Housing Operations for Individuals and Households; 97.050 Presidentially Declared Disaster Assistance to Individuals and Households—Other Needs; 97.036, Disaster Grants—Public Assistance (Presidentially Declared Disasters); 97.039, Hazard Mitigation Grant.

Pete Gaynor,

Acting Administrator, Federal Emergency Management Agency.

[FR Doc. 2019–12851 Filed 6–17–19; 8:45 am]

BILLING CODE 9111–23–P

DEPARTMENT OF HOMELAND SECURITY

Federal Emergency Management Agency

[Internal Agency Docket No. FEMA–4418–DR; Docket ID FEMA–2019–0001]

Washington; Amendment No. 1 to Notice of a Major Disaster Declaration

AGENCY: Federal Emergency Management Agency, DHS.

ACTION: Notice.

SUMMARY: This notice amends the notice of a major disaster declaration for State of Washington (FEMA–4418–DR), dated March 4, 2019, and related determinations.

DATES: This change occurred on March 27, 2019.

FOR FURTHER INFORMATION CONTACT: Dean Webster, Office of Response and Recovery, Federal Emergency Management Agency, 500 C Street SW, Washington, DC 20472, (202) 646–2833.

SUPPLEMENTARY INFORMATION: The Federal Emergency Management Agency (FEMA) hereby gives notice that pursuant to the authority vested in the Administrator, under Executive Order 12148, as amended, Willie G. Nunn, of FEMA is appointed to act as the Federal Coordinating Officer for this disaster.

This action terminates the appointment of Dolph A. Diemont as Federal Coordinating Officer for this disaster.

The following Catalog of Federal Domestic Assistance Numbers (CFDA) are to be used for reporting and drawing funds: 97.030, Community Disaster Loans; 97.031, Cora Brown Fund; 97.032, Crisis Counseling; 97.033, Disaster Legal Services; 97.034, Disaster Unemployment Assistance (DUA); 97.046, Fire Management Assistance Grant; 97.048, Disaster Housing Assistance to Individuals and Households In Presidentially Declared Disaster Areas; 97.049, Presidentially Declared Disaster Assistance—Disaster Housing Operations for Individuals and Households; 97.050, Presidentially Declared Disaster Assistance to Individuals and Households—Other Needs; 97.036, Disaster Grants—Public Assistance (Presidentially Declared Disasters); 97.039, Hazard Mitigation Grant.

Pete Gaynor,

Acting Administrator, Federal Emergency Management Agency.

[FR Doc. 2019–12835 Filed 6–17–19; 8:45 am]

BILLING CODE 9111–23–P

DEPARTMENT OF HOMELAND SECURITY

Federal Emergency Management Agency

[Internal Agency Docket No. FEMA–4429–DR; Docket ID FEMA–2019–0001]

Mississippi; Amendment No. 2 to Notice of a Major Disaster Declaration

AGENCY: Federal Emergency Management Agency, DHS.

ACTION: Notice.

SUMMARY: This notice amends the notice of a major disaster declaration for the State of Mississippi (FEMA–4429–DR), dated April 23, 2019, and related determinations.

DATES: This amendment was issued May 22, 2019.

FOR FURTHER INFORMATION CONTACT: Dean Webster, Office of Response and Recovery, Federal Emergency Management Agency, 500 C Street SW, Washington, DC 20472, (202) 646–2833.

SUPPLEMENTARY INFORMATION: The notice of a major disaster declaration for the

State of Mississippi is hereby amended to include the following areas among those areas determined to have been adversely affected by the event declared a major disaster by the President in his declaration of April 23, 2019.

Coahoma, Leflore, Sunflower, and Washington Counties for Public Assistance.

The following Catalog of Federal Domestic Assistance Numbers (CFDA) are to be used for reporting and drawing funds: 97.030, Community Disaster Loans; 97.031, Cora Brown Fund; 97.032, Crisis Counseling; 97.033, Disaster Legal Services; 97.034, Disaster Unemployment Assistance (DUA); 97.046, Fire Management Assistance Grant; 97.048, Disaster Housing Assistance to Individuals and Households In Presidentially Declared Disaster Areas; 97.049, Presidentially Declared Disaster Assistance—Disaster Housing Operations for Individuals and Households; 97.050, Presidentially Declared Disaster Assistance to Individuals and Households—Other Needs; 97.036, Disaster Grants—Public Assistance (Presidentially Declared Disasters); 97.039, Hazard Mitigation Grant.

Pete Gaynor,

Acting Administrator, Federal Emergency Management Agency.

[FR Doc. 2019–12859 Filed 6–17–19; 8:45 am]

BILLING CODE 9111–23–P

DEPARTMENT OF HOMELAND SECURITY

Federal Emergency Management Agency

[Internal Agency Docket No. FEMA–3405–EM; Docket ID FEMA–2019–0001]

Florida; Amendment No. 2 to Notice of an Emergency Declaration

AGENCY: Federal Emergency Management Agency, DHS.

ACTION: Notice.

SUMMARY: This notice amends the notice of an emergency declaration for State of Florida (FEMA–3405–EM), dated October 9, 2018, and related determinations.

DATES: This change occurred on May 1, 2019.

FOR FURTHER INFORMATION CONTACT: Dean Webster, Office of Response and Recovery, Federal Emergency Management Agency, 500 C Street SW, Washington, DC 20472, (202) 646–2833.

SUPPLEMENTARY INFORMATION: The Federal Emergency Management Agency (FEMA) hereby gives notice that pursuant to the authority vested in the Administrator, under Executive Order 12148, as amended, Thomas J. Dargan, of FEMA is appointed to act as the Federal Coordinating Officer for this emergency.

This action terminates the appointment of Thomas J. McCool as Federal Coordinating Officer for this emergency.

The following Catalog of Federal Domestic Assistance Numbers (CFDA) are to be used for reporting and drawing funds: 97.030, Community Disaster Loans; 97.031, Cora Brown Fund; 97.032, Crisis Counseling; 97.033, Disaster Legal Services; 97.034, Disaster Unemployment Assistance (DUA); 97.046, Fire Management Assistance Grant; 97.048, Disaster Housing Assistance to Individuals and Households In Presidentially Declared Disaster Areas; 97.049, Presidentially Declared Disaster Assistance—Disaster Housing Operations for Individuals and Households; 97.050, Presidentially Declared Disaster Assistance to Individuals and Households—Other Needs; 97.036, Disaster Grants—Public Assistance (Presidentially Declared Disasters); 97.039, Hazard Mitigation Grant.

Pete Gaynor,

Acting Administrator, Federal Emergency Management Agency.

[FR Doc. 2019–12857 Filed 6–17–19; 8:45 am]

BILLING CODE 9111–23–P

DEPARTMENT OF HOMELAND SECURITY

Federal Emergency Management Agency

[Internal Agency Docket No. FEMA–4423–DR; Docket ID FEMA–2019–0001]

Cahuilla Band of Indians; Amendment No. 1 to Notice of a Major Disaster Declaration

AGENCY: Federal Emergency Management Agency, DHS.

ACTION: Notice.

SUMMARY: This notice amends the notice of a major disaster declaration for the Cahuilla Band of Indians (FEMA–4423–DR), dated March 28, 2019, and related determinations.

DATES: This change occurred on May 9, 2019.

FOR FURTHER INFORMATION CONTACT: Dean Webster, Office of Response and Recovery, Federal Emergency Management Agency, 500 C Street SW, Washington, DC 20472, (202) 646–2833.

SUPPLEMENTARY INFORMATION: The Federal Emergency Management Agency (FEMA) hereby gives notice that pursuant to the authority vested in the Administrator, under Executive Order 12148, as amended, Benigno Bern Ruiz, of FEMA is appointed to act as the Federal Coordinating Officer for this disaster.

This action terminates the appointment of Mark Wingate as Federal Coordinating Officer for this disaster.

The following Catalog of Federal Domestic Assistance Numbers (CFDA) are to be used for reporting and drawing funds: 97.030, Community Disaster Loans; 97.031, Cora Brown Fund; 97.032, Crisis Counseling; 97.033, Disaster Legal Services; 97.034, Disaster Unemployment Assistance (DUA); 97.046, Fire Management Assistance Grant; 97.048, Disaster Housing Assistance to Individuals and Households In Presidentially Declared Disaster Areas; 97.049, Presidentially Declared Disaster Assistance—Disaster Housing Operations for Individuals and Households; 97.050, Presidentially Declared Disaster Assistance to Individuals and Households—Other Needs; 97.036, Disaster Grants—Public Assistance (Presidentially Declared Disasters); 97.039, Hazard Mitigation Grant.

Pete Gaynor,

Acting Administrator, Federal Emergency Management Agency.

[FR Doc. 2019–12874 Filed 6–17–19; 8:45 am]

BILLING CODE 9111–23–P

DEPARTMENT OF HOMELAND SECURITY

Federal Emergency Management Agency

[Internal Agency Docket No. FEMA–4431–DR; Docket ID FEMA–2019–0001]

California; Major Disaster and Related Determinations

AGENCY: Federal Emergency Management Agency, DHS.

ACTION: Notice.

SUMMARY: This is a notice of the Presidential declaration of a major disaster for the State of California (FEMA–4431–DR), dated May 1, 2019, and related determinations.

DATES: The declaration was issued May 1, 2019.

FOR FURTHER INFORMATION CONTACT: Dean Webster, Office of Response and Recovery, Federal Emergency Management Agency, 500 C Street SW, Washington, DC 20472, (202) 646–2833.

SUPPLEMENTARY INFORMATION: Notice is hereby given that, in a letter dated May 1, 2019, the President issued a major disaster declaration under the authority of the Robert T. Stafford Disaster Relief and Emergency Assistance Act, 42 U.S.C. 5121 *et seq.* (the ''Stafford Act''), as follows:

I have determined that the damage in certain areas of the State of California resulting from severe winter storms, flooding, landslides, and mudslides during the period of February 13 to February 15, 2019, is of sufficient severity and magnitude to warrant a major disaster declaration under the Robert

T. Stafford Disaster Relief and Emergency Assistance Act, 42 U.S.C. 5121 *et seq.* (the ''Stafford Act''). Therefore, I declare that such a major disaster exists in the State of California.

In order to provide Federal assistance, you are hereby authorized to allocate from funds available for these purposes such amounts as you find necessary for Federal disaster assistance and administrative expenses.

You are authorized to provide Public Assistance in the designated areas and Hazard Mitigation throughout the State. Consistent with the requirement that Federal assistance be supplemental, any Federal funds provided under the Stafford Act for Hazard Mitigation will be limited to 75 percent of the total eligible costs. Federal funds provided under the Stafford Act for Public Assistance also will be limited to 75 percent of the total eligible costs, with the exception of projects that meet the eligibility criteria for a higher Federal cost-sharing percentage under the Public Assistance Alternative Procedures Pilot Program for Debris Removal implemented pursuant to section 428 of the Stafford Act.

Further, you are authorized to make changes to this declaration for the approved assistance to the extent allowable under the Stafford Act.

The Federal Emergency Management Agency (FEMA) hereby gives notice that pursuant to the authority vested in the Administrator, under Executive Order 12148, as amended, Benigno Bern Ruiz, of FEMA is appointed to act as the Federal Coordinating Officer for this major disaster.

The following areas of the State of California have been designated as adversely affected by this major disaster:

Calaveras, Colusa, Marin, Mariposa, Mendocino, Modoc, Napa, Riverside, Santa Barbara, Shasta, and Trinity Counties for Public Assistance.

All areas within the State of California are eligible for assistance under the Hazard Mitigation Grant Program.

The following Catalog of Federal Domestic Assistance Numbers (CFDA) are to be used for reporting and drawing funds: 97.030, Community Disaster Loans; 97.031, Cora Brown Fund; 97.032, Crisis Counseling; 97.033, Disaster Legal Services; 97.034, Disaster Unemployment Assistance (DUA); 97.046, Fire Management Assistance Grant; 97.048, Disaster Housing Assistance to Individuals and Households In Presidentially Declared Disaster Areas; 97.049, Presidentially Declared Disaster Assistance—Disaster Housing Operations for Individuals and Households; 97.050, Presidentially Declared Disaster Assistance to Individuals and Households—Other Needs; 97.036, Disaster Grants—Public Assistance (Presidentially Declared Disasters); 97.039, Hazard Mitigation Grant.

Pete Gaynor,

Acting Administrator, Federal Emergency Management Agency.

[FR Doc. 2019–12852 Filed 6–17–19; 8:45 am]

BILLING CODE 9111–23–P

DEPARTMENT OF HOMELAND SECURITY

[Docket No. DHS–2019–0004]

Privacy Act of 1974; System of Records

AGENCY: U.S. Citizenship and Immigration Services, Department of Homeland Security.

ACTION: Notice of a Modified System of Records.

SUMMARY: In accordance with the Privacy Act of 1974, the Department of Homeland Security (DHS) proposes to modify and reissue a current DHS system of records titled, ''Department of Homeland Security/U.S. Citizenship and Immigration Services-011 E-Verify Program System of Records.'' This system of records describes DHS/U.S. Citizenship and Immigration Services (USCIS) collection and maintenance of records on employers, entities authorized by federal law to use E-Verify, employees in the United States, and individuals subject to employment eligibility verification under E-Verify and E-Verify Self-Check.

DHS/USCIS is updating this system of records notice to: (1) Add the Data Universal Numbering System (DUNS) number; (2) add Validation Instrument for Business Enterprises (VIBE) as a new record source; (3) specify under categories of records that information from State Motor Vehicle Agencies can be derived from commercial data providers; (4) update Routine Use E and add Routine Use F to comply with requirements set forth by OMB Memorandum M–17–12, ''Preparing for and Responding to a Breach of Personally Identifiable Information,'' (Jan. 3, 2017); (5) amend Routine Use J to include disclosure to the National Law Enforcement Telecommunications System (NLETS)[1] for the purpose of validating information from a driver's license, permit, or identification card issued by a State Motor Vehicle Agency; (6) add Routine Use L for disclosure to persons and other entities authorized by federal law to confirm the employment eligibility of individuals subject to verification under E-Verify; (7) add Routine Use M for disclosure to federal government intelligence or counterterrorism agencies or components when DHS becomes aware of a violation or potential violation of E-Verify program requirements that is related to an indication of a threat or potential threat to national security to assist in countering such a threat; and (8) explain that this system of records covers records from other DHS systems of records that may claim exemptions and DHS will comply with the record source system exemptions when relevant. All following routine uses are being renumbered to account for the additional routine uses. Additionally, this notice includes non-substantive changes to simplify the formatting and text of the previously published notice. This modified system will be included in DHS's inventory of record systems.

DATES: Submit comments on or before July 18, 2019. This modified system will be effective upon publication. New or modified routine uses are effective July 18, 2019.

ADDRESSES: You may submit comments, identified by docket number DHS–2019–0004 by one of the following methods:

- *Federal e-Rulemaking Portal: http://www.regulations.gov.* Follow the instructions for submitting comments.
- *Fax:* 202–343–4010.
- *Mail:* Jonathan R. Cantor, Acting Chief Privacy Officer, Privacy Office, Department of Homeland Security, Washington, DC 20528–0655.

Instructions: All submissions received must include the agency name and docket number DHS–2019–0004. All comments received will be posted without change to *http://www.regulations.gov,* including any personal information provided.

Docket: For access to the docket to read background documents or comments received, go to *http://www.regulations.gov.*

FOR FURTHER INFORMATION CONTACT: For general questions, please contact: Donald K. Hawkins, (202) 272–8030, *USCIS.PrivacyCompliance@uscis.dhs.gov,* Privacy Officer, U.S. Citizenship and Immigration Services, 20 Massachusetts Avenue NW, Washington, DC 20529. For privacy questions, please contact: Jonathan R. Cantor, (202) 343–1717, *Privacy@hq.dhs.gov,* Acting Chief Privacy Officer, Privacy Office, Department of Homeland Security, Washington, DC 20528–0655.

SUPPLEMENTARY INFORMATION:

I. Background

In accordance with the Privacy Act of 1974, 5 U.S.C. 552a, DHS/USCIS proposes to modify and reissue a current DHS system of records titled, ''DHS/USCIS–011 E-Verify Program System of Records.''

USCIS is modifying this system of records notice (SORN) to (1) add the

[1] NLETS, which is owned by the States, is a 501(c)(3) nonprofit organization that was created over 50 years ago by the principal law enforcement agencies of the States.

DUNS number as a category of record; (2) add VIBE as a new record source; (3) specify under categories of records that information from State Motor Vehicle Agencies can be derived from commercial data providers; (4) update Routine Use E and add Routine Use F to comply with requirements set forth by OMB Memorandum M–17–12, ''Preparing for and Responding to a Breach of Personally Identifiable Information,'' (Jan. 3, 2017); (5) amend Routine Use J to include disclosure to NLETS for the purpose of validating information from a driver's license, permit, or identification card issued by a state Motor Vehicle Agency; (6) add Routine Use L for disclosure to persons and other entities authorized by federal law to confirm the employment eligibility of individuals subject to verification under E-Verify; (7) add Routine Use M for disclosure to federal government intelligence or counterterrorism agencies or components when DHS becomes aware of a violation or potential violation of E-Verify program requirements that is related to an indication of a threat or potential threat to national security for the purpose of countering such threat; and (8) explain that this system of records covers records from other DHS systems of records that may claim exemptions and DHS will comply with the record source system exemptions when relevant. All following routine uses are being renumbered to account for the additional routine uses. Additionally, this notice includes non-substantive changes to simplify the formatting and text of the previously published notice.

E-Verify is an internet-based system that allows enrolled participants to electronically confirm the employment eligibility of employees to work in the United States. Participants collect information from the Form I–9, *Employment Eligibility Verification,* completed by the employee, to query against existing information accessed by the Verification Information System (VIS). VIS provides employment authorization information to employers, entities authorized by federal law to use E-Verify, and to individuals seeking to check employment eligibility under the Immigration and Nationality Act (INA). It may be used by DHS to support DHS monitoring and compliance activities aimed to prevent the commission of fraud, discrimination, or other misuse or abuse of E-Verify, or other violation of law related to employment eligibility verification. E-Verify, in particular, monitors against violations of privacy laws or other illegal activity related to misuse of E-Verify, including for example: (1) Investigating duplicate or incomplete enrollments by employers; (2) inappropriate enrollments by individuals posing as employers; (3) verifications that are not performed within the required time limits; and (4) cases referred by and between E-Verify and the Department of Justice Immigrant and Employee Rights Section (formerly known as the Office of Special Counsel for Immigration-Related Unfair Employment Practices), or other intelligence or law enforcement entities.

Additionally, the information in E-Verify may be used for program management and analysis, program outreach, customer service, and preventing or deterring further use of stolen identities in E-Verify.

USCIS also provides services to employees, job seekers, and employers through a free Web-based service: myE-Verify, which provides the following resources:

- Resource Center: Information and learning materials from the employee's perspective about the E-Verify and employment eligibility verification processes, including employee's rights and roles, privacy, as well as the employer's responsibilities.
- Case Tracker: Track the status of the employee's E-Verify case-in-progress and advises whether any action is required.
- myE-Verify personal accounts: Allows employees to establish a secure personal account to access additional myE-Verify features. Account holders have access to the following features:
  - *Self Lock: Protects the employee's identity by preventing unauthorized use of his or her Social Security number (SSN) in E-Verify.* Self Lock allows the employee to place a ''lock'' on his or her SSN. This helps prevent anyone else from using the employee's SSN to try to get a job with an E-Verify employer. The Self Lock feature is only available to myE-Verify account holders.
  - Document Expiration Reminders: When an employee presents a work authorization document with an expiration date, E-Verify will remind the employer when the document is about to expire. This case alert provides a countdown of expiring work authorization documents beginning 90 days before expiration and will show the document as expired for 30 days past expiration.
  - Case History: Allows employees to see where and when their information has been used in E-Verify and Self Check. The Case History feature is only available to myE-Verify account holders.
  - Self Check: Provides individuals the ability to confirm their employment eligibility. Self Check also provides a service that permits individuals who successfully complete a Self Check case to establish a myE-Verify account. The information collected to register and maintain a myE-Verify account, including information collected for e-authentication purposes, is covered by DHS/ALL–037 E-Authentication System of Records, previously published in the **Federal Register** at 79 FR 46857 (August 11, 2014).

Consistent with DHS's information sharing mission, records covered by this SORN may be shared with other DHS Components that have a need to know the information to carry out their national security, law enforcement, immigration, intelligence, or other homeland security functions. In addition, DHS/USCIS may share information with appropriate federal, state, local, tribal, territorial, foreign, or international government agencies consistent with the routine uses set forth in this system of records notice. USCIS reviews disclosures from this System of Records for compliance with Illegal Immigration Reform and Immigrant Responsibility Act of 1996 (IIRIRA) section 404(h).

This modified system will be included in DHS's inventory of record systems.

II. Privacy Act

The Privacy Act embodies fair information practice principles in a statutory framework governing the means by which Federal Government agencies collect, maintain, use, and disseminate individuals' records. The Privacy Act applies to information that is maintained in a ''system of records.'' A ''system of records'' is a group of any records under the control of an agency from which information is retrieved by the name of an individual or by some identifying number, symbol, or other identifying particular assigned to the individual. In the Privacy Act, an individual is defined to encompass U.S. citizens and lawful permanent residents. Additionally, the Judicial Redress Act (JRA) provides covered persons with a statutory right to make requests for access and amendment to covered records, as defined by the JRA, along with judicial review for denials of such requests. In addition, the JRA prohibits disclosures of covered records, except as otherwise permitted by the Privacy Act.

Below is the description of the DHS/USCIS–011 E-Verify Program System of Records.

In accordance with 5 U.S.C. 552a(r), DHS has provided a report of this system of records to the Office of

Management and Budget and to Congress.

SYSTEM NAME AND NUMBER

Department of Homeland Security (DHS)/U.S. Citizenship Immigration Service (USCIS)-011 E-Verify Program.

SECURITY CLASSIFICATION:

Unclassified.

SYSTEM LOCATION:

Records are maintained at USCIS Headquarters in Washington, DC and at DHS/USCIS field offices. Electronic records are stored in the *Verification Information System (VIS).*

SYSTEM MANAGER(S):

Chief, Verification Division, *E-Verify@dhs.gov,* U.S. Citizenship and Immigration Services, Department of Homeland Security, 131 M Street NE, Suite 200, Mail Stop 200, Washington, DC 20529.

AUTHORITY FOR MAINTENANCE OF THE SYSTEM:

Illegal Immigration Reform and Immigrant Responsibility Act of 1996, Public Law 104–208, secs. 401–405 (Sept. 30, 1996), codified at 8 U.S.C. 1324a note.

PURPOSE(S) OF THE SYSTEM:

The purpose of this system is to provide employment authorization information to employers, entities authorized by federal law to participate in E-Verify, and to individuals seeking to check employment eligibility under the Immigration and Nationality Act (INA). This system also enables individuals to access features concerning the use of their personally identifiable information (PII) in E-Verify, such as the ability to lock their Social Security number (SSN) to prevent its use in E-Verify and Self Check. The system may also be used by DHS to support DHS monitoring and compliance activities for obtaining information in order to prevent the commission of fraud, discrimination, or other misuse or abuse of the E-Verify system, including violations of privacy laws or other illegal activity related to misuse of E-Verify, including for example: (1) Investigating duplicate or incomplete enrollments by employers; (2) inappropriate enrollments by individuals posing as employers; (3) verifications that are not performed within the required time limits; and (4) cases referred by and between E-Verify and the Department of Justice Immigrant and Employee Rights Section (formerly known as the Office of Special Counsel for Immigration-Related Unfair Employment Practices), or other *intelligence or* law enforcement entities.

Additionally, the information in E-Verify may be used for program management and analysis, program outreach, customer service, and preventing or deterring further use of stolen identities in E-Verify.

CATEGORIES OF INDIVIDUALS COVERED BY THE SYSTEM:

Categories of individuals covered by E-Verify, to the extent these individuals are covered by and defined by the Privacy Act and this SORN, include: Employees whose employers have submitted identity and employment eligibility information on their behalf; employers or employer agents that enroll in E-Verify; clients of employer agents who enroll in E-Verify; individuals employed or retained by employers or employer agents who have accounts to use E-Verify; individuals subject to verification by E-Verify; entities authorized by federal law to use E-Verify; entities who contact E-Verify for information on the use of E-Verify; entities who provide their names and contact information to E-Verify for notification or contact purposes; individuals seeking to confirm employment eligibility under the INA using Self Check; and individuals who have created a myE-Verify account.

CATEGORIES OF RECORDS IN THE SYSTEM:

Information collected about individuals may include the following:

A. Information about the employee or individual to be confirmed:

- Full name (first, middle, and last);
- Other names or aliases, if available;
- Date of birth;
- SSN;
- Home address (address, apartment number, city, state/region);
- Email address;
- Telephone number (home, mobile, work, other);
- Employee's First Day of Employment;
- Claimed citizenship status;
- Form I–9 document type provided by individual to the entity verifying employment eligibility (such as passport, employment authorization document, or permanent resident card);
- Expiration date of acceptable Form I–9 document;
- State or jurisdiction of issuance of identity document when that document is a driver's license, driver's permit, or state-issued identification (ID) card;
- Passport number and country of issuance;
- Driver's license number, driver's permit number, or state-issued ID number;
- Receipt number;
- Visa number;
- Alien Number (A-Number);
- I–94 Number;
- Form I–766, *Employment Authorization Document,* Number; and
- Form I–551, *Permanent Resident Card,* Number and photographs.

B. Disposition data from the employer or entity. If the E-Verify case result is Employment Authorized, E-Verify automatically closes the case and no additional information is collected from the employer or entity. The following codes are entered by the employer or entity when the case result is Final Nonconfirmation (FNC), based on what the employer or entity does as a result of the employment verification query (the most up-to-date disposition codes can be found in the E-Verify User Manual available at *https://www.E-Verify.gov*):

- [Employer Name] will no longer employ [Employee Name].
- [Employer Name] will continue to employ [Employee Name].
  - ○ If the employer selects the option that he or she will continue to employ the individual, he or she has to provide the reason why he or she will do so in a free text field.
- Neither of the options above apply—I am closing this case for a different reason.
  - ○ If the employer selects the option that he or she is closing the case for another reason, the employer has to select a reason from the following predetermined reasons:
    - ▪ SSA (Social Security Administration) asked me to re-run this case
    - ▪ DHS (Department of Homeland Security) asked me to re-run this case
    - ▪ The information entered was not correct.
    - ▪ Other
- If the employer selects ''Other,'' the employer must type the reason in a free text field.
- Information related to the expiration of the three day hire rule;
  - ○ Whether an individual is awaiting a SSN;
  - ○ Technical problems;
  - ○ Audit revealed new hire was not run;
  - ○ Federal contractor with E-Verify clause verifying existing employees; and
  - ○ Other.

C. Information about the Enrollee, Employer, Entity, or Employer Agent:

- Company name;
- ''Doing business as'' name (optional);
- Data Universal Numbering System (DUNS) number (only required for employers with Federal Acquisition Regulation (FAR) clause);
- Street address;

- Employer Identification Number (EIN);
- North American Industry Classification System (NAICS) code;
- Number of employees;
- Number of sites;
- Parent company or corporate company;
- Name of company point of contact;
- Phone number;
- Fax number; and
- Email address.

D. Information about the Individual User of E-Verify (*e.g.,* Human Resource employee conducting E-Verify queries):

- Full name (first, middle initial, and last);
- Telephone number (home, mobile, work, other);
- Fax number;
- Email address; and
- User ID.

E. Employment Eligibility Information created by E-Verify:

- Case Verification Number; and
- Verification Information System response (the most up-to-date codes can be found in the E-Verify User Manual available at *https://www.E-Verify.gov*), for example:
  - Employment authorized;
  - DHS verification in process;
  - SSA Tentative Nonconfirmation (TNC);
  - DHS TNC;
  - Employee referred to SSA;
  - Employee referred to DHS;
  - Close Case and Resubmit;
  - SSA Case in Continuance (In rare cases, SSA needs more than 10 Federal Government workdays to confirm employment eligibility); and
  - DHS Case in Continuance (In rare cases, DHS needs more than 10 Federal Government workdays to confirm employment eligibility);
  - FNC.

F. Information from the National Law Enforcement Telecommunications System (NLETS) and State Motor Vehicle Agencies (MVA) used to verify the information from a driver's license, permit, or state issued ID card. The categories of records from MVAs and MVA information via commercial data providers include:

- Full name (first, middle and last);
- State or Jurisdiction of Issuance;
- Document type (*i.e.,* driver's license, driver's permit, or state-issued ID card);
- Document number;
- Date of birth;
- Status text (*e.g.,* status of the license—valid, revoked, or expired);
- Status description text (*i.e.,* document issue date and/or record found indicator); and
- Expiration date.

G. Information from federal databases used to confirm employment eligibility may contain some or all of the following information about the individual being verified:

- Full name (first, middle, and last);
- Other names or aliases, if available;
- Date of birth;
- Age;
- Country of birth;
- Country of citizenship;
- A-Number;
- SSN;
- Citizenship number;
- Receipt number;
- Home address (address, apartment number, city, state/region);
- Previous Address;
- Phone number;
- Nationality;
- Gender;
- Photograph;
- Date entered into United States;
- Class of admission;
- File Control Office Code;
- Student and Exchange Visitor Information System (SEVIS) Number;
- Form I–94 Number;
- Provision of Law cited for employment authorization;
- Office Code where the authorization was granted;
- Date employment authorization decision was issued;
- Date employment authorization begins;
- Date employment authorization expires;
- Date employment authorization was denied;
- Confirmation of employment eligibility;
- TNC of employment eligibility and justification;
- FNC of employment eligibility;
- Status of Department of Justice Executive Office Immigration Review System (EOIR) information, if in proceedings;
- Date alien's status changed;
- Class of Admission Code;
- Date employee is admitted into the U.S. until;
- Port of Entry;
- Departure date;
- Visa Number;
- Passport Number;
- Passport Country of Issuance (COI);
- Passport Card Number;
- Benefit granting document number, for example, Form I–551, *Permanent Resident Card,* or Form I–766, *Employment Authorization Document;*
- Expiration date;
- Employment Authorization Card information;
- Permanent Resident Card information;
- Employer Identification Number;
- Valid to date;
- Student status;
- Visa Code;
- Status Code;
- Status change date;
- Port of Entry Code;
- Non-Citizen entry date;
- Program end date;
- Naturalization Certificate Number;
- Naturalization date and place;
- Naturalization information and certificate;
- Naturalization verification (Citizenship Certificate Identification ID);
- Naturalization verification (Citizenship naturalization date/time);
- Immigration status (Immigration Status Code);
- Universal Control Number (formerly known as Federal Bureau of Investigation Number);
- Admission Number;
- Date of admission;
- Marital status;
- Marriage date and place;
- Marriage information and Certificate;
- Visa Control Number;
- Visa Foil Number;
- Case history;
- Alerts;
- Case summary comments;
- Case category;
- Date of encounter;
- Encounter information;
- Case actions and decisions;
- Bonds;
- Current status;
- Asylum Applicant Receipt date;
- Airline and Flight Number;
- Country of residence;
- City where boarded;
- City where visa was issued;
- Date visa issued;
- Address while in United States;
- File Number; and
- File location.

H. Information from individuals who successfully complete an E-Verify query using Self Check:

- Full name (first, middle initial, and last);
- Other names or aliases, if available;
- Date of birth;
- SSN; and
- Document(s) type, associated number, and associated expiration date that demonstrates work authorization. These may include U.S. Passport, Form I–766, *Employment Authorization Document,* Form I–551, *Permanent Resident Card,* or other documents and associated numbers listed as acceptable Form I–9, Form I–9 and supporting documents; and Employment Eligibility Verification documents.

I. Information from individuals that establish a lock on their SSN through myE-Verify accounts:

- Full name (first, middle initial, and last);
- Other names or aliases, if available;
- SSN;
- Date of birth;
- Lock Receipt Number;
- Lock date and expiration date;
- Email address; and
- Self-Generated security questions and answers.

RECORD SOURCE CATEGORIES:

Records are obtained from several sources including: (A) Information collected from employers and entities about their employees; (B) Information collected from individuals relating to employment eligibility verification; (C) Information collected from E-Verify users used to provide account access and monitoring; (D) Information collected from entities requesting information about E-Verify; (E) Information created by E-Verify; (F) Information from individuals seeking to check employment eligibility and access to features concerning the use of their information in E-Verify and Self Check; (G) Federal and state databases listed below, including the systems and the SORNs that cover information contained in those systems:

- SSA Numident System covered by SSA's Master Files of SSN Holders and SSN Applications SORN, 79 FR 8780 (February 13, 2014), 78 FR 40542 (July 5, 2013), and 75 FR 82121 (December 29, 2010);
- U.S. Customs and Border Protection (CBP) information covered by DHS/CBP–005 Advance Passenger Information System SORN, 80 FR 13407 (March 13, 2015); DHS/CBP–007 CBP Border Crossing Information SORN, 81 FR 89957 (December 13, 2016); DHS/CBP–011 U.S. Customs and Border Protection TECS SORN, 73 FR 77778 (December 19, 2008); DHS/CBP–016 Non-Immigrant System SORN, 80 FR 13398 (March 13, 2015); DHS/CBP–021 Arrival and Departure Information System SORN, 80 FR 72081 (November 18, 2015); DHS/USVISIT–004 DHS Automated Biometric Identification System (IDENT) SORN, 72 FR 31080 (June 5, 2007); DHS/USCIS/ICE/CBP–001 Alien File, Index, and National File Tracking System of Records SORN, 82 FR 43556 (September 18, 2017); and DHS/ICE–001 Student and Exchange Visitor Information System (SEVIS) SORN, 75 FR 412 (January 5, 2010);
- CBP Nonimmigrant Information System (NIIS) covered by DHS/CBP–016 Non-Immigrant System SORN, 80 FR 13398 (March 13, 2015);
- CBP Border Crossing Information (BCI) covered by DHS/CBP–007 CBP Border Crossing Information SORN, 81 FR 89957 (December 13, 2016);
- U.S. Immigration Customs and Enforcement (ICE) SEVIS covered by DHS/ICE–001 Student and Exchange Visitor Information System (SEVIS) SORN, 75 FR 412 (January 5, 2010); DHS/ALL–016 Correspondence Records SORN, 83 FR 48645 (September 26, 2018); and DHS/ALL–003 Department of Homeland Security General Training Records SORN, 73 FR 71656 (November 25, 2008);
- ICE ENFORCE Integrated Database (EID) Enforcement Alien Removal Module (EARM) Alien Number covered by DHS/ICE–011 Criminal Arrest Records and Immigration Enforcement Records (CARIER) System of Records SORN, 81 FR 72080 (October 19, 2016);
- USCIS Aliens Change of Address System (AR–11) covered by DHS/USCIS–007 Benefit Information System SORN, 81 FR 72069 (October 19, 2016);
- USCIS Central Index System (CIS) covered by DHS/USCIS/ICE/CBP–001 Alien File, Index, and National File Tracking System of Records SORN, 82 FR 43556 (September 18, 2017);
- USCIS Customer Profile Management System (CPMS) covered by DHS/USCIS–018 Immigration Biometric and Background Check (IBBC) System of Records SORN, 83 FR 36950 (July 31, 2018);
- USCIS Computer-Linked Application Information Management System 3 (CLAIMS 3) covered by DHS/USCIS–007 Benefit Information System SORN, 81 FR 72069 (October 19, 2016);
- USCIS Computer-Linked Application Information Management System 4 (CLAIMS 4) covered by DHS/USCIS–007 Benefit Information System SORN, 81 FR 72069 (October 19, 2016);
- USCIS Citizenship and Immigration Services Centralized Operational Repository (eCISCOR); [2]
- USCIS RAILS (a modernization of the National File Tracking System) covered by DHS/USCIS/ICE/CBP–001 Alien File, Index, and National File Tracking System of Records SORN, 82 FR 43556 (September 18, 2017);
- USCIS Microfilm Digitization Application System (MiDAS) covered by DHS/USCIS/ICE/CBP–001 Alien File, Index, and National File Tracking System of Records SORN, 82 FR 43556 (September 18, 2017);
- USCIS Marriage Fraud Amendment System (MFAS) covered by DHS/USCIS–007 Benefit Information System SORN, 81 FR 72069 (October 19, 2016);
- USCIS Enterprise Document Management System (EDMS) covered by DHS/USCIS/ICE/CBP–001 Alien File, Index, and National File Tracking System of Records SORN, 82 FR 43556 (September 18, 2017);
- USCIS Global (formerly known as Refugees, Asylum, and Parole System (RAPS)) covered by DHS/USCIS–010 Asylum Information and Pre-Screening System of Records SORN, 80 FR 74781 (November 30, 2015);
- USCIS Validation Instrument for Business Enterprises (VIBE) covered by DHS/USCIS/ICE/CBP–001 Alien File, Index, and National File Tracking System of Records SORN, 82 FR 43556 (September 18, 2017); DHS/USCIS–006 Fraud Detection and National Security Records (FDNS) SORN, 77 FR 47411 (August 8, 2012); and DHS/USCIS–007 Benefit Information System SORN, 81 FR 72069 (October 19, 2016);
- Department of State Consular Consolidated Database (CCD) covered by STATE–05 Overseas Citizens Services Records and Other Overseas Records, 81 FR 62235, (September 8, 2016); STATE–26 Passport Records, 80 FR 15653 (March 24, 2015); and STATE–39 Visa Records, 83 FR 28062 (June 15, 2018);
- DOJ's Immigration Review Information Exchange System (IRIES) covered by EOIR–001 Records and Management Information System, 69 FR 26179 (May 11, 2004), including routine use updates in 82 FR 24147 (May 25, 2017); and
- State Motor Vehicle Agencies (through commercial data providers).

ROUTINE USES OF RECORDS MAINTAINED IN THE SYSTEM, INCLUDING CATEGORIES OF USERS AND PURPOSES OF SUCH USES:

In addition to those disclosures generally permitted under 5 U.S.C. 552a(b) of the Privacy Act, all or a portion of the records or information contained in this system may be disclosed outside DHS as a routine use pursuant to 5 U.S.C. 552a(b)(3) as listed below. USCIS reviews disclosures from this System of Records for compliance with IIRIRA section 404(h).

A. To the Department of Justice (DOJ), including Offices of the U.S. Attorneys, or other federal agencies conducting litigation or in proceedings before any court, adjudicative, or administrative body, when it is relevant or necessary to the litigation and one of the following is a party to the litigation or has an interest in such litigation:

1. DHS or any component thereof;
2. Any employee or former employee of DHS in his/her official capacity;
3. Any employee or former employee of DHS in his/her individual capacity when DOJ or DHS has agreed to represent the employee; or

[2] SORN coverage is dependent upon connected IT systems. See Appendix to DHS/USCIS/PIA–023(b) Enterprise Citizenship and Immigrations Services Centralized Operational Repository.

4. The United States or any agency thereof.

B. To a congressional office from the record of an individual in response to an inquiry from that congressional office made at the request of the individual to whom the record pertains.

C. To the National Archives and Records Administration (NARA) or General Services Administration pursuant to records management inspections being conducted under the authority of 44 U.S.C. secs. 2904 and 2906.

D. To an agency or organization for the purpose of performing audit or oversight operations as authorized by law, but only such information as is necessary and relevant to such audit or oversight function.

E. To appropriate agencies, entities, and persons when (1) DHS suspects or has confirmed that there has been a breach of the system of records; (2) DHS has determined that as a result of the suspected or confirmed breach there is a risk of harm to individuals, DHS (including its information systems, programs, and operations), the Federal Government, or national security; and (3) the disclosure made to such agencies, entities, and persons is reasonably necessary to assist in connection with DHS's efforts to respond to the suspected or confirmed breach or to prevent, minimize, or remedy such harm.

F. To another Federal agency or Federal entity, when DHS determines that information from this system of records is reasonably necessary to assist the recipient agency or entity in (1) responding to a suspected or confirmed breach or (2) preventing, minimizing, or remedying the risk of harm to individuals, the recipient agency or entity (including its information systems, programs, and operations), the Federal Government, or national security, resulting from a suspected or confirmed breach.

G. To an appropriate federal, state, tribal, local, international, or foreign law enforcement agency or other appropriate authority charged with investigating or prosecuting a violation or enforcing or implementing a law, rule, regulation, or order, when a record, either on its face or in conjunction with other information, indicates a violation or potential violation of law, which includes criminal, civil, or regulatory violations and such disclosure is proper and consistent with the official duties of the person making the disclosure.

H. To contractors and their agents, grantees, experts, consultants, and others performing or working on a contract, service, grant, cooperative agreement, or other assignment for DHS, when necessary to accomplish an agency function related to this system of records. Individuals provided information under this routine use are subject to the same Privacy Act requirements and limitations on disclosure as are applicable to DHS officers and employees.

I. To employers participating in E-Verify in order to confirm the identity and employment eligibility of their employees working in the United States.

J. To NLETS and the American Association of MVA Network and participating MVAs for the purpose of validating information for a driver's license, permit, or identification card issued by the state MVAs.

K. To the DOJ, Civil Rights Division, for the purpose of responding to matters within the DOJ's jurisdiction of E-Verify, especially with respect to discrimination.

L. To persons and other entities authorized by federal law to determine the employment eligibility of individuals subject to verification under E-Verify (*e.g.,* SSA).

M. To federal government intelligence or counterterrorism agencies or components when DHS becomes aware of a violation or potential violation of E-Verify program requirements that is related to an indication of a threat or potential threat to national security to assist in countering such threat.

N. To the news media and the public, with the approval of the Chief Privacy Officer in consultation with counsel, when there exists a legitimate public interest in the disclosure of the information, when disclosure is necessary to preserve confidence in the integrity of DHS, or when disclosure is necessary to demonstrate the accountability of DHS's officers, employees, or individuals covered by the system, except to the extent the Chief Privacy Officer determines that release of the specific information in the context of a particular case would constitute a clearly unwarranted invasion of personal privacy.

POLICIES AND PRACTICES FOR STORAGE OF RECORDS:

DHS/USCIS stores records in this system electronically or on paper in secure facilities in a locked drawer behind a locked door. The records may be stored on magnetic disc, tape, and digital media.

POLICIES AND PRACTICES FOR RETRIEVAL OF RECORDS:

DHS/USCIS may retrieve records by name, verification case number, A-Number, I–94 Number, Receipt number, Passport (United States or Foreign) number and country of issuance, Driver's License, Permit, or State-Issued Identification Card Number, or SSN of the employee or employee user, or by the submitting company name.

POLICIES AND PRACTICES FOR RETENTION AND DISPOSAL OF RECORDS:

E-Verify records are covered by NARA-approved records retention and disposal schedule, N1–566–08–007. USCIS stores and retains records collected in the process of enrolling in E-Verify and in verifying employment eligibility for ten (10) years from the date of the completion of the last transaction, unless the records are part of an ongoing investigation in which case they may be retained until completion of the investigation. This period is based on the statute of limitations for most types of misuse or fraud possible using E-Verify (under 18 U.S.C. 3291, the statute of limitations for false statements or misuse regarding passports, citizenship, or naturalization documents).

ADMINISTRATIVE, TECHNICAL, AND PHYSICAL SAFEGUARDS:

DHS/USCIS safeguards records in this system according to applicable rules and policies, including all applicable DHS automated systems security and access policies. USCIS has imposed strict controls to minimize the risk of compromising the information that is being stored. Access to the computer system containing the records in this system is limited to those individuals who have a need to know the information for the performance of their official duties and who have appropriate clearances or permissions.

RECORD ACCESS PROCEDURES:

Individuals seeking access to and notification of any record contained in this system of records, or seeking to contest its content, may submit a request in writing to the Chief Privacy Officer and to the USCIS FOIA/Privacy Act Officer whose contact information can be found at *http://www.dhs.gov/foia* under ''Contact Information.'' If an individual believes more than one component maintains Privacy Act records concerning him or her, the individual may submit the request to the Chief Privacy Officer and Chief Freedom of Information Act Officer, Department of Homeland Security, Washington, DC 20528–0655. Even if neither the Privacy Act nor the Judicial Redress Act provide a right of access, certain records about you may be available under the Freedom of Information Act.

When an individual is seeking records about himself or herself from this system of records or any other Departmental system of records, the individual's request must conform with the Privacy Act regulations set forth in 6 CFR part 5. The individual must first verify his/her identity, meaning that the individual must provide his/her full name, current address, and date and place of birth. The individual must sign the request, and the individual's signature must either be notarized or submitted under 28 U.S.C. 1746, a law that permits statements to be made under penalty of perjury as a substitute for notarization. While no specific form is required, an individual may obtain forms for this purpose from the Chief Privacy Officer and Chief Freedom of Information Act Officer, *http://www.dhs.gov/foia* or 1–866–431–0486. In addition, the individual should:

- Explain why he or she believes the Department would have information being requested;
- Identify which component(s) of the Department he or she believes may have the information;
- Specify when the individual believes the records would have been created; and
- Provide any other information that will help the FOIA staff determine which DHS component agency may have responsive records;

If an individual's request is seeking records pertaining to another living individual, the request must include an authorization from the individual whose record is being requested, authorizing the release to the requester.

Without the above information, the component(s) may not be able to conduct an effective search, and the individual's request may be denied due to lack of specificity or lack of compliance with applicable regulations.

CONTESTING RECORD PROCEDURES:

For records covered by the Privacy Act or covered JRA records, individuals may make a request for amendment or correction of a record of the Department about the individual by writing directly to the Department component that maintains the record, unless the record is not subject to amendment or correction. The request should identify each particular record in question, state the amendment or correction desired, and state why the individual believes that the record is not accurate, relevant, timely, or complete. The individual may submit any documentation that would be helpful. If the individual believes that the same record is in more than one system of records, the request should state that and be addressed to each component that maintains a system of records containing the record. For records not covered by the Privacy Act or Judicial Redress Act, individuals may still amend their records at a USCIS Field Office by making an InfoPass appointment *http://infopass.uscis.gov* or by contacting the USCIS Contact Center at 1–800–375–5283.

NOTIFICATION PROCEDURES:

See ''Record Access Procedures.''

EXEMPTIONS PROMULGATED FOR THE SYSTEM:

No exemption will be claimed except for those records covered by a system of records that have been claimed exempt in that source system identified above in the record source categories under 5 U.S.C. 552a(j)(2) and are covered by this system of records. DHS will claim the same exemptions for those records that are claimed for the original primary systems of records from which they originated for this system.

HISTORY:

DHS/USCIS–011 E-Verify Program, 79 FR 46852 (August 11, 2014); E-Verify Program, 77 FR 47419 (August 8, 2012); Verification and Information System (VIS), 73 FR 75445 (December 11, 2008); VIS, 73 FR 10793 (February 28, 2008); VIS, 72 FR 17569 (April 9, 2007); Justice/INS–035, 67 FR 64134 (October 17, 2002); and Alien Status; and Verification Index (ASVI) Justice/INS–009, 66 FR 174 (September 7, 2001).

Jonathan R Cantor,

Acting Chief Privacy Officer, Department of Homeland Security.

[FR Doc. 2019–12789 Filed 6–17–19; 8:45 am]

BILLING CODE 9111–97–P

DEPARTMENT OF THE INTERIOR

Fish and Wildlife Service

[Docket No. FWS–HQ–IA–2019–0051; FXIA16710900000–190–FF09A30000]

Foreign Endangered Species; Receipt of Permit Applications

AGENCY: Fish and Wildlife Service, Interior.

ACTION: Notice of receipt of permit applications; request for comments.

SUMMARY: We, the U.S. Fish and Wildlife Service, invite the public to comment on applications to conduct certain activities with foreign species that are listed as endangered under the Endangered Species Act (ESA). With some exceptions, the ESA prohibits activities with listed species unless Federal authorization is issued that allows such activities. The ESA also requires that we invite public comment before issuing permits for any activity otherwise prohibited by the ESA with respect to any endangered species.

DATES: We must receive comments by July 18, 2019.

ADDRESSES:

Obtaining Documents: The applications, application supporting materials, and any comments and other materials that we receive will be available for public inspection at *http://www.regulations.gov* in Docket No. FWS–HQ–IA–2019–0051.

Submitting Comments: When submitting comments, please specify the name of the applicant and the permit number at the beginning of your comment. You may submit comments by one of the following methods:

- *Internet: http://www.regulations.gov.* Search for and submit comments on Docket No. FWS–HQ–IA–2019–0051.
- *U.S. mail or hand-delivery:* Public Comments Processing, Attn: Docket No. FWS–HQ–IA–2019–0051; U.S. Fish and Wildlife Service Headquarters, MS: PERMA; 5275 Leesburg Pike; Falls Church, VA 22041–3803.

For more information, see Public Comment Procedures under **SUPPLEMENTARY INFORMATION**.

FOR FURTHER INFORMATION CONTACT: Brenda Tapia, by phone at 703–358–2104, via email at *DMAFR@fws.gov*, or via the Federal Relay Service at 800–877–8339.

SUPPLEMENTARY INFORMATION:

I. Public Comment Procedures

A. How do I comment on submitted applications?

We invite the public and local, State, Tribal, and Federal agencies to comment on these applications. Before issuing any of the requested permits, we will take into consideration any information that we receive during the public comment period.

You may submit your comments and materials by one of the methods in **ADDRESSES**. We will not consider comments sent by email or fax, or to an address not in **ADDRESSES**. We will not consider or include in our administrative record comments we receive after the close of the comment period (see **DATES**).

When submitting comments, please specify the name of the applicant and the permit number at the beginning of your comment. Provide sufficient information to allow us to authenticate any scientific or commercial data you include. The comments and recommendations that will be most

useful and likely to influence agency decisions are: (1) Those supported by quantitative information or studies; and (2) those that include citations to, and analyses of, the applicable laws and regulations.

B. May I review comments submitted by others?

You may view and comment on others' public comments at *http://www.regulations.gov,* unless our allowing so would violate the Privacy Act (5 U.S.C. 552a) or Freedom of Information Act (5 U.S.C. 552).

C. Who will see my comments?

If you submit a comment at *http://www.regulations.gov,* your entire comment, including any personal identifying information, will be posted on the website. If you submit a hardcopy comment that includes personal identifying information, such as your address, phone number, or email address, you may request at the top of your document that we withhold this information from public review. However, we cannot guarantee that we will be able to do so. Moreover, all submissions from organizations or businesses, and from individuals identifying themselves as representatives or officials of organizations or businesses, will be made available for public disclosure in their entirety.

II. Background

To help us carry out our conservation responsibilities for affected species, and in consideration of section 10(c) of the Endangered Species Act of 1973, as amended (ESA; 16 U.S.C. 1531 *et seq.*), we invite public comments on permit applications before final action is taken. With some exceptions, the ESA prohibits certain activities with listed species unless Federal authorization is issued that allows such activities. Permits issued under section 10(a)(1)(A) of the ESA allow otherwise prohibited activities for scientific purposes or to enhance the propagation or survival of the affected species. Service regulations regarding prohibited activities with endangered species, captive-bred wildlife registrations, and permits for any activity otherwise prohibited by the ESA with respect to any endangered species are available in title 50 of the Code of Federal Regulations in part 17.

III. Permit Applications

We invite comments on the following applications.

Applicant: Memphis Zoo, Memphis, TN; Permit No. 26396D

The applicant requests a permit to re-export biological samples of giant panda (*Ailuropoda melanoleuca*) to Shanghai Zoo, Shanghai, China, for the purpose of enhancing the propagation or survival of the species. This notification is for a single re-export.

Applicant: Wildwood Wildlife Park and Nature Center, Inc., Minocqua, WI; Permit No. 31011D

The applicant requests a permit to purchase in interstate commerce five male and five female captive hatched African penguin (*Spheniscus demersus*) from Richmond Metro Zoo Mosely, VA, for the purpose of enhancing the propagation or survival of the species. This notification is for a single interstate commerce activity.

Applicant: Duke University Lemur Center, Durham, NC; Permit No. 48515B

The applicant requests a permit to conduct interstate and foreign commerce of animals listed under the ESA for captive-born and wild source animals of the family Lemuridae (lemurs), Genus Indri (wooly lemurs) and Propithecus (sifakas), and aye-aye (*Daubentonia madagascariensis*), pygmy slow loris (*Nycticebus pygmaeus),* and Philippine tarsier (*Tarsius syrichta)* for the purpose of scientific research. This notification covers activities to be conducted by the applicant over a 5-year period.

Applicant: Kathryn Everson/University of Kentucky, Lexington, KY; Permit No. 36412D

The applicant requests a permit to import 12 tubes of DNA samples from wild source Milne-Edwards' sportive lemur (*Lepilemur edwardsi*), Sambirano mouse lemur (*Microcebus sambiranensis*) and Danfoss' mouse lemur (*Microcebus danfossi*) for the purpose of scientific research. This notification is for a single import.

Applicant: Y.O. Schreiner Ranch, Mountain Home, TX; Permit No. 02439D

The applicant requests a captive-bred wildlife registration under 50 CFR 17.21(g) for swamp deer (*Rucervus duvaucelii*) to enhance the propagation or survival of the species. This notification covers activities to be conducted by the applicant over a 5-year period.

Applicant: Y.O. Schreiner Ranch, Mountain Home, TX; Permit No. 02441D

The applicant requests a permit authorizing the culling of excess swamp deer (*Rucervus duvaucelii*) from the captive herd maintained at their facility, to enhance the species' propagation and survival. This notification covers activities to be conducted by the applicant over a 5-year period.

Multiple Trophy Applicants

The following applicants request permits to import sport-hunted trophies of male bontebok (*Damaliscus pygargus*) culled from a captive herd maintained under the management program of the Republic of South Africa, for the purpose of enhancing the propagation or survival of the species.

Applicant: Arnold Beck, Spring Creek, NV; Permit No. 32317D

Applicant: Micajah Boatright, Kingwood, TX; Permit No. 37707D

Applicant: Curtis Jones, Kerrville, TX; Permit No. 37668D

Applicant: Douglas Pruett, Texarkana, AR; Permit No. 31036D

Applicant: David Seeno, Concord, CA; Permit No. 33365D

Applicant: Charles Green, Fort Worth, TX; Permit No. 22214D

Applicant: Brian Bailey, Roswell, NM; Permit No. 33361D

Applicant: Marianne Kelley, Oklahoma City, OK; Permit No. 37949D

Applicant: Thomas Edlund, Arvada, CO; Permit No. 37099D

IV. Next Steps

After the comment period closes, we will make decisions regarding permit issuance. If we issue permits to any of the applicants listed in this notice, we will publish a notice in the **Federal Register**. You may locate the notice announcing the permit issuance by searching *http://www.regulations.gov* for the permit number listed above in this document. For example, to find information about the potential issuance of Permit No. 12345A, you would go to regulations.gov and search for ''12345A''.

V. Authority

We issue this notice under the authority of the Endangered Species Act of 1973, as amended (16 U.S.C. 1531 *et seq.*), and its implementing regulations.

Brenda Tapia,

Program Analyst/Data Administrator, Branch of Permits, Division of Management Authority.

[FR Doc. 2019–12798 Filed 6–17–19; 8:45 am]

BILLING CODE 4333–15–P

DEPARTMENT OF THE INTERIOR

Bureau of Land Management

[LLES962000 L14400000 BJ0000 18X]

Notice of Filing of Plat Survey; Eastern States

AGENCY: Bureau of Land Management, Interior

ACTION: Notice of Official Filing.

SUMMARY: The plats of survey of the following described lands are scheduled to be officially filed in the Bureau of land Management (BLM), Eastern States Office, Washington, DC, 30 days from the date of this publication. The surveys, executed at the request of the identified agencies is required for the management of these lands.

DATES: Unless there are protests of this action, the filing of the plat described in this notice will happen on July 18, 2019.

ADDRESSES: Written notices protesting any of these surveys must be sent to the State Director, BLM Eastern States, Suite 950, 20 M Street SE, Washington, DC 20003.

FOR FURTHER INFORMATION CONTACT: Janet Wilkins, Acting Chief Cadastral Surveyor for Eastern States; (202) 912–7756; email: *J1wilkin@blm.gov;* or U.S. Postal Service: BLM–ES, 20 M Street SE, Washington, DC 20003. Attn: Cadastral Survey. Persons who use a telecommunications device for the deaf may call the Federal Information Relay Service (FIRS) at 1–800–877–8339 to contact the above individual during normal business hours. The service is available 24 hours a day, 7 days a week, to leave a message or question with the above individual. You will receive a reply during normal business hours.

SUPPLEMENTARY INFORMATION: The supplemental plat of section 29, Township 50 North, Range 18 West, Fourth Principal Meridian, Minnesota; portrays the amended lotting of Lot 4 and the removal of lot 5 as designated on the plat approved August 5, 1981. Survey requested by the Bureau of Indian Affairs and BLM.

The dependent resurvey of a portion of the West Boundary of Tract 2001, the North boundary of Tract 2223 and the North and West boundaries of Tract 2224 of the Edwin B. Forsythe National Wildlife Refuge in Brick Township, Ocean County in the State of New Jersey. Survey requested by the U.S. Fish and Wildlife Service.

The dependent resurvey of tract 7009 of the Edwin B. Forsythe National Wildlife Refuge Galloway Township, Atlantic County, in the State of New Jersey. Survey requested by the U.S. Fish and Wildlife Service.

A person or party who wishes to protest a survey must file a written notice of protest within 30 calendar days from the date of this publication at the address list in the **ADDRESSES** section of this notice. A statement of reasons for the protest may be filed with the notice of protest and must be filed within 30 calendar days after the protest is filed. If a protest against the survey is received prior to the date of official filing, the filing will be stayed pending consideration of the protest. A plat will not be officially filed until the day after all protests have been dismissed or otherwise resolved.

Before including your address, phone number, email address, or other personal identifying information in your comment, please be aware that your entire protest, including your personal identifying information may be made publicly available at any time. While you can ask us in your comment to withhold your personal identifying information from public review, we cannot guarantee that we will be able to do so.

A copy of the described plats will be placed in the open files, and available to the public as a matter of information.

Authority: 43 U.S.C. Chap. 3.

Janet M. Wilkins,

Acting Chief Cadastral Surveyor.

[FR Doc. 2019–12891 Filed 6–17–19; 8:45 am]

BILLING CODE 4310–GJ–P

INTERNATIONAL TRADE COMMISSION

Carburetors and Products Containing Such Carburetors

[Investigation No. 337–TA–1123]

Commission Determination Not To Review an Initial Determination Granting a Motion for Leave To Amend the Complaint and Notice of Investigation

AGENCY: U.S. International Trade Commission.

ACTION: Notice.

SUMMARY: Notice is hereby given that the U.S. International Trade Commission has determined not to review an initial determination (''ID'') (Order No. 53) of the presiding administrative law judge (''ALJ''), granting complainant's unopposed motion for leave to amend the complaint and notice of investigation to substitute ''Home Depot Product Authority LLC'' and ''Home Depot U.S.A., Inc.'' for originally-named respondent ''The Home Depot, Inc.'' of Atlanta, Georgia.

FOR FURTHER INFORMATION CONTACT: Amanda Pitcher Fisherow, Esq., Office of the General Counsel, U.S. International Trade Commission, 500 E Street SW, Washington, DC 20436, telephone (202) 205–2737. Copies of non-confidential documents filed in connection with this investigation are or will be available for inspection during official business hours (8:45 a.m. to 5:15 p.m.) in the Office of the Secretary, U.S. International Trade Commission, 500 E Street SW, Washington, DC 20436, telephone (202) 205–2000. General information concerning the Commission may also be obtained by accessing its internet server at *https://www.usitc.gov.* The public record for this investigation may be viewed on the Commission's electronic docket (EDIS) at *https://edis.usitc.gov.* Hearing-impaired persons are advised that information on this matter can be obtained by contacting the Commission's TDD terminal on (202) 205–1810.

SUPPLEMENTARY INFORMATION: The Commission instituted this investigation on July 20, 2018, based on a complaint, as supplemented, filed on behalf of Walbro, LLC of Tucson, Arizona (''Complainant''). 83 FR 34,614 (July 20, 2018). The complaint, as supplemented, alleges violations of Section 337 of the Tariff Act of 1930, as amended, 19 U.S.C. 1337 (''section 337''), based upon the importation into the United States, the sale for importation, and the sale within the United States after importation of certain carburetors and products containing such carburetors by reason of infringement of one or more of U.S. Patent Nos. 6,394,424; 6,439,547; 6,533,254; 6,540,212; and 7,070,173. The complaint further alleges that an industry in the United States exists as required by section 337. The notice of investigation named numerous respondents, including The Home Depot, Inc. The Office of Unfair Import Investigations (''OUII'') was named as a party in this investigation.

On May 8, 2019, Complainant filed an unopposed motion to amend the complaint and notice of investigation to substituted ''Home Depot Product Authority LLC'' and ''Home Depot U.S.A., Inc.'' for originally-named respondent ''The Home Depot, Inc.'' On May 20, 2019, OUII filed a response supporting the motion.

On May 28, 2019, the ALJ issued Order No. 53. Order No. 53 finds that ''good cause exists for amending the Complaint to substitute Respondents Home Depot Product Authority LLC and

Home Depot U.S.A, Inc. for Respondent The Home Depot, Inc.'' Order No. 53 at 2. The ALJ further finds that ''amending the Complaint and Notice of Investigation to reflect the real parties in interest will aid in the development of the Investigation and is necessary to avoid prejudicing the public interest and rights of the parties to the Investigation.'' *Id.* No party petitioned for review.

The Commission has determined not to review the ID. The notice of investigation and complaint are amended.

The authority for the Commission's determination is contained in section 337 of the Tariff Act of 1930, as amended (19 U.S.C. 1337), and in part 210 of the Commission's Rules of Practice and Procedure (19 CFR part 210).

By order of the Commission.

Issued: June 12, 2019.

Lisa Barton,

Secretary to the Commission.

[FR Doc. 2019–12776 Filed 6–17–19; 8:45 am]

BILLING CODE 7020–02–P

INTERNATIONAL TRADE COMMISSION

[Investigation No. 337–TA–1161]

Certain Food Processing Equipment and Packaging Materials Thereof; Institution of Investigation

AGENCY: U.S. International Trade Commission.

ACTION: Notice.

SUMMARY: Notice is hereby given that a complaint was filed with the U.S. International Trade Commission on March 12, 2019, under section 337 of the Tariff Act of 1930, as amended, on behalf of 3–A Sanitary Standards, Inc. of McLean, Virginia. A first amended complaint was filed on May 14, 2019, and a second amended complaint was filed on June 3, 2019. The complaint, as amended, alleges violations of section 337 based upon the importation or sale of certain food processing equipment and packaging materials thereof by reason of false advertising and unfair competition, the threat or effect of which is to destroy or substantially injure an industry in the United States.

The complainant requests that the Commission institute an investigation and, after the investigation, issue a general, or in the alternative a limited exclusion order, and cease and desist orders.

ADDRESSES: The amended complaint, except for any confidential information contained therein, is available for inspection during official business hours (8:45 a.m. to 5:15 p.m.) in the Office of the Secretary, U.S. International Trade Commission, 500 E Street SW, Room 112, Washington, DC 20436, telephone (202) 205–2000. Hearing impaired individuals are advised that information on this matter can be obtained by contacting the Commission's TDD terminal on (202) 205–1810. Persons with mobility impairments who will need special assistance in gaining access to the Commission should contact the Office of the Secretary at (202) 205–2000. General information concerning the Commission may also be obtained by accessing its internet server at *https://www.usitc.gov.* The public record for this investigation may be viewed on the Commission's electronic docket (EDIS) at *https://edis.usitc.gov.*

FOR FURTHER INFORMATION CONTACT: Pathenia M. Proctor, The Office of Unfair Import Investigations or U.S. International Trade Commission, telephone (202) 205–2560.

SUPPLEMENTARY INFORMATION:

Authority: The authority for institution of this investigation is contained in section 337 of the Tariff Act of 1930, as amended, 19 U.S.C. 1337, and in section 210.10 of the Commission's Rules of Practice and Procedure, 19 CFR 210.10 (2019).

Scope of Investigation: Having considered the amended complaint, the U.S. International Trade Commission, on June 11, 2019, Ordered that—

(1) Pursuant to subsection (b) of section 337 of the Tariff Act of 1930, as amended, an investigation be instituted to determine whether there is a violation of subsections (a)(1)(A) of section 337 in the importation or sale of certain products identified in paragraph (2) by reason of false advertising and unfair competition under Section 43(a) of the Lanham Act, 15 U.S.C. 1125(a), the threat or effect of which is to destroy or substantially injure an industry in the United States;

(2) Pursuant to section 210.10(b)(1) of the Commission's Rules of Practice and Procedure, 19 CFR 210.10(b)(1), the plain language description of the accused products or category of accused products, which defines the scope of the investigation, is ''certain food processing equipment and packaging materials thereof, namely, valves (including clamped cleaning balls), clamps (including hygienic fittings clamps), and fittings (including sanitary elbow, sanitary clamp elbows, and pipe fittings), and packaging materials thereof'';

(3) For the purpose of the investigation so instituted, the following are hereby named as parties upon which this notice of investigation shall be served:

(a) The complainant is:

3–A Sanitary Standards, Inc., 6888 Elm Street, Suite 2D, McLean, VA 22101

(b) The respondents are the following entities alleged to be in violation of section 337, and are the parties upon which the amended complaint is to be served:

Wenzhou QiMing Stainless Co., Ltd., No. 659 Dingxiang Road, Binhai Industry Zone, Wenxhou, Zhejiang, China 325025

High MPa Valve Manufacturing Co., Ltd., No. 97, Road 15, Avenue 4, Economic and Technological Zone, Wenzhou, Zhejiang, China 325024

Wenzhou Sinco Steel Co, Ltd., 167 Ningcheng West Road, Ningcheng Industry Zone, Yongzhong, Longwan District, Wenzhou, China 325024

Wenzhou Kasin Valve Pipe Fitting Co., Ltd., Binhai Industry Zone, Wenzhou Economy & Technology Development Zone, E, Wenzhou, China 325000

Wenzhou Fuchuang Machinery Co., Ltd., Binhai Industrial Park, Shacheng Town, Longwan District, Wenzhou, Zhejiang, China 325024

(c) The Office of Unfair Import Investigations, U.S. International Trade Commission, 500 E Street SW, Suite 401, Washington, DC 20436; and

(4) For the investigation so instituted, the Chief Administrative Law Judge, U.S. International Trade Commission, shall designate the presiding Administrative Law Judge.

Responses to the amended complaint and the notice of investigation must be submitted by the named respondents in accordance with section 210.13 of the Commission's Rules of Practice and Procedure, 19 CFR 210.13. Pursuant to 19 CFR 201.16(e) and 210.13(a), such responses will be considered by the Commission if received not later than 20 days after the date of service by the Commission of the amended complaint and the notice of investigation. Extensions of time for submitting responses to the amended complaint and the notice of investigation will not be granted unless good cause therefor is shown.

Failure of a respondent to file a timely response to each allegation in the amended complaint and in this notice may be deemed to constitute a waiver of the right to appear and contest the allegations of the amended complaint and this notice, and to authorize the administrative law judge and the Commission, without further notice to

the respondent, to find the facts to be as alleged in the amended complaint and this notice and to enter an initial determination and a final determination containing such findings, and may result in the issuance of an exclusion order or a cease and desist order or both directed against the respondent.

By order of the Commission.
Issued: June 12, 2019.

Lisa Barton,

Secretary to the Commission.

[FR Doc. 2019–12791 Filed 6–17–19; 8:45 am]

BILLING CODE 7020–02–P

DEPARTMENT OF JUSTICE

[OMB Number 1110–0006]

Agency Information Collection Activities; Proposed eCollection; eComments Requested; Law Enforcement Officers Killed and Assaulted: Extension of a Currently Approved Collection

AGENCY: Federal Bureau of Investigation, Department of Justice.

ACTION: 30-Day notice.

SUMMARY: Department of Justice (DOJ), Federal Bureau of Investigation (FBI), Criminal Justice Information Services (CJIS) Division will be submitting the following information collection request to the Office of Management and Budget (OMB) for review and approval in accordance with the Paperwork Reduction Act of 1995.

DATES: Comments are encouraged and will be accepted for an additional 30 days until July 18, 2019.

FOR FURTHER INFORMATION CONTACT: Written comments and/or suggestions regarding the items contained in this notice, especially the estimated public burden and associated response time, should be directed to Mrs. Amy C. Blasher, Unit Chief, Federal Bureau of Investigation, CJIS Division, Module E–3, 1000 Custer Hollow Road, Clarksburg, West Virginia 26306; facsimile (304) 625–3566. Written comments and/or suggestions can also be sent to the Office of Management and Budget, Office of Information and Regulatory Affairs, Attention Department of Justice Desk Officer, Washington, DC 20503 or sent to *OIRA_submissions@omb.eop.gov.*

SUPPLEMENTARY INFORMATION: Written comments and suggestions from the public and affected agencies concerning the proposed collection of information are encouraged. Your comments should address one or more of the following four points:

—Evaluate whether the proposed collection of information is necessary for the proper performance of the functions of the agency, including whether the information will have practical utility;
—Evaluate the accuracy of the agency's estimate of the burden of the proposed collection of information, including the validity of the methodology and assumptions used;
—Enhance the quality, utility, and clarity of the information to be collected; and
—Minimize the burden of the collection of information on those who are to respond, including through the use of appropriate automated, electronic, mechanical, or other technological collection techniques or other forms of information technology, *e.g.,* permitting electronic submission of responses.

Overview of This Information Collection

(1) *Type of Information Collection:* Extension of a currently approved collection.

(2) *Title of the Form/Collection:* Law Enforcement Officers Killed and Assaulted.

(3) *Agency form number, if any, and the applicable component of the Department sponsoring the collection:* Form Number: 1110–0006, Sponsor: Criminal Justice Information Services Division, Federal Bureau of Investigation, Department of Justice.

(4) *Affected public who will be asked or required to respond, as well as a brief abstract:* City, county, state, federal, and tribal law enforcement agencies.

Abstract: Under Title 28, U.S. Code, Section 534, Acquisition, Preservation, and Exchange of Identification Records; Appointment of Officials, 1930, this collection requests Law Enforcement Officers Killed or Assaulted data from city, county, state, federal, and tribal law enforcement agencies in order for the FBI UCR Program to serve as the national clearinghouse for the collection and dissemination of crime data to publish these statistics in the Law Enforcement Officers Killed and Assaulted publication.

(5) *An estimate of the total number of respondents and the amount of time estimated for an average respondent to respond/reply:* There are approximately 18,547 law enforcement agencies within the universe of potential respondents. Based on current reporting patterns, 10,721 law enforcement agency respondents would submit monthly resulting in 128,652 responses with an estimated response time of 7 minutes per response on this form. The remaining 7,826 agencies would provide responses through the National Incident-Based Reporting System covered under a different data collection.

(6) *An estimate of the total public burden (in hours) associated with the collection:* There are approximately 15,009 hours, annual burden, associated with this information collection.

If additional information is required contact: Melody Braswell, Department Clearance Officer, United States Department of Justice, Justice Management Division, Policy and Planning Staff, Two Constitution Square, 145 N Street NE, Suite 3E.405B, Washington, DC 20530.

Dated: June 13, 2019.

Melody Braswell,

Department Clearance Officer, PRA, U.S. Department of Justice.

[FR Doc. 2019–12882 Filed 6–17–19; 8:45 am]

BILLING CODE 4410–02–P

DEPARTMENT OF LABOR

Employment and Training Administration

Agency Information Collection Activities; Comment Request; Collection for Contractor and Grantee Information Gathering

ACTION: Notice.

SUMMARY: The Department of Labor's (DOL's), Employment Training Administration (ETA) is soliciting comments concerning a proposed revision for the authority to conduct the information collection request (ICR) titled, ''Contractor and Grantee Information Gathering'' This comment request is part of continuing Departmental efforts to reduce paperwork and respondent burden in accordance with the Paperwork Reduction Act of 1995 (PRA).

DATES: Consideration will be given to all written comments received by August 19, 2019.

ADDRESSES: A copy of this ICR with applicable supporting documentation; including a description of the likely respondents, proposed frequency of response, and estimated total burden may be obtained free by contacting Lawrence Lyford by telephone at 202–693–3121 (this is not a toll-free number), TTY 1–877–889–5627 (this is not a toll-free number), or by email at *Lyford.Lawrence@dol.gov.*

Submit written comments about, or requests for a copy of, this ICR by mail or courier to the U.S. Department of

Labor, Employment and Training Administration, Office of Job Corps, 200 Constitution Avenue NW, Room N4507, Washington, DC 20210; by email: *Lyford.Lawrence@dol.gov;* or by Fax 202–693–3113.

FOR FURTHER INFORMATION CONTACT: Lawrence Lyford by telephone at 202–693–3121 (this is not a toll free number) or by email at *Lyford.Lawrence@dol.gov.*

SUPPLEMENTARY INFORMATION: The DOL, as part of continuing efforts to reduce paperwork and respondent burden, conducts a pre-clearance consultation program to provide the general public and Federal agencies an opportunity to comment on proposed and/or continuing collections of information before submitting them to the OMB for final approval. This program helps to ensure requested data can be provided in the desired format, reporting burden (time and financial resources) is minimized, collection instruments are clearly understood, and the impact of collection requirements can be properly assessed.

Job Corps is the nation's largest residential, educational, and career technical training program for the economically disadvantaged youths. The Economic Opportunity Act established Job Corps in 1964, and it currently operates under the authority of the Workforce Innovation and Opportunity Act (WIOA) of 2014. For over 54 years, Job Corps has helped prepare over three million at-risk young people between the ages of 16 and 24 for success in our nation's workforce. With 123 centers in 50 states, Puerto Rico, and the District of Columbia, Job Corps assists students across the nation in attaining academic credentials, including High School Diplomas (HSD) and/or High School Equivalency (HSE), and career technical training credentials, including industry-recognized certifications, state licensures, and pre-apprenticeship credentials.

Job Corps is a national program administered by the U.S. Department of Labor (DOL) through the Office of Job Corps and six Regional Offices. DOL awards and administers contracts for the recruiting and screening of new students, center operations, and the placement and transitional support of graduates and former enrollees. Large and small corporations and nonprofit organizations manage and operate 98 Job Corps centers under contractual agreements with DOL. These contract Center Operators are selected through a competitive procurement process that evaluates potential operators' technical expertise, proposed costs, past performance, and other factors, in accordance with the Competition in Contracting Act and the Federal Acquisition Regulations. The U.S. Department of Agriculture operates the remaining 25 Job Corps centers, called Civilian Conservation Centers, via an interagency agreement. In addition, DOL awards experimental, research and demonstration grants, which requires collection of cost and performance information. The DOL has a direct role in the operation of Job Corps and does not serve as a pass-through agency for this program. The Workforce Innovation Opportunity Act (WIOA), Section 116(b)(2)(A)(i), Section 159(c)(4) and Section 156 (a) authorizes this information collection.

This information collection is subject to the PRA. A Federal agency generally cannot conduct or sponsor a collection of information, and the public is generally not required to respond to an information collection, unless OMB approves the collection under the PRA and displays a currently valid OMB Control Number. In addition, notwithstanding any other provisions of law, no person shall generally be subject to penalty for failing to comply with a collection of information that does not display a valid Control Number. *See* 5 CFR 1320.5(a) and 1320.6.

Interested parties are encouraged to provide comments to the contact shown in the **ADDRESSES** section. Comments must be written to receive consideration, and they will be summarized and included in the request for OMB approval of the final ICR. In order to help ensure appropriate consideration, comments should mention OMB control number 1205–0426.

Submitted comments will also be a matter of public record for this ICR and posted on the internet, without redaction. The DOL encourages commenters not to include personally identifiable information, confidential business data, or other sensitive statements/information in any comments.

The DOL is particularly interested in comments that:

- Evaluate whether the proposed collection of information is necessary for the proper performance of the functions of the agency, including whether the information will have practical utility;
- Evaluate the accuracy of the agency's estimate of the burden of the proposed collection of information, including the validity of the methodology and assumptions used;
- Enhance the quality, utility, and clarity of the information to be collected; and
- Minimize the burden of the collection of information on those who are to respond, including through the use of appropriate automated, electronic, mechanical, or other technological collection techniques or other forms of information technology (*e.g.,* permitting electronic submission of responses).

Agency: DOL–ETA.
Type of Review: Revision.
Title of Collection: Contractor and Grantee Information Gathering.
Forms: Various.
OMB Control Number: 1205–0219.
Affected Public: Individuals or Households and Private Sector businesses, grantees or other for-profits.
Estimated Number of Respondents: 2,935.
Frequency: varies.
Total Estimated Annual Responses: 193,925.
Estimated Average Time per Response: varies.
Estimated Total Annual Burden Hours: 84,819.
Total Estimated Annual Other Cost Burden: $0.

Molly E. Conway,
Acting Assistant Secretary for Employment and Training, Labor.

[FR Doc. 2019–12784 Filed 6–17–19; 8:45 am]
BILLING CODE 4510–FT–P

NATIONAL CREDIT UNION ADMINISTRATION

Agency Information Collection Activities: Proposed Collection; Comment Request; NCUA Personnel Security Processing Form

AGENCY: National Credit Union Administration (NCUA).

ACTION: Notice and request for comment.

SUMMARY: The National Credit Union Administration (NCUA), as part of a continuing effort to reduce paperwork and respondent burden, invites the general public and other Federal agencies to comment on a new information collection, as required by the Paperwork Reduction Act of 1995.

DATES: Written comments should be received on or before August 19, 2019 to be assured consideration.

ADDRESSES: Interested persons are invited to submit written comments on the information collections to the Mackie Malaka, National Credit Union Administration, 1775 Duke Street, Suite 6058, Alexandria, Virginia 22314, or email at *PRAComments@NCUA.gov.*

FOR FURTHER INFORMATION CONTACT: Requests for additional information should be directed to Mackie Malaka at the address above or telephone (703) 548–2704.

SUPPLEMENTARY INFORMATION:

OMB Number: 3133–0201.

Title: NCUA Personnel Security Processing Forms.

Forms: NCUA 1092, 1093, and 1093C.

Abstract: Title 5, Code of Federal Regulations, Part 731 (suitability), Executive Order (E.O.) 13764 (contractor fitness), E.O. 12968/SEAD 4 (classified access), and Homeland Security Directive-12 (badging) requires all federal and contractor employees to undergo a background investigation when seeking employment with an agency. The NCUA Personnel Security Processing Forms (*Personnel Security Data Form-Contractor, Personnel Security Data Form-Employee and the Authorization for Release of Credit Information*) are used to collect information necessary for applying the government-established suitability/fitness criteria on employees before they can begin employment with or perform contractual services for the NCUA. It may be also required should a contract employee be moved to a new contract work. The background investigation process culminates in an adjudicative determination on whether or not these employees are fit to perform services on behalf of the agency.

Type of Review: New collection.

Affected Public: Individuals or Households.

Estimated No. of Respondents: 500.

Estimated Annual Frequency: 1.5.

Estimated Annual Number of Responses: 1,200.

Estimated Burden Hours per Response: 0.16.

Estimated Total Annual Burden Hours: 200.

Request for Comments: Comments submitted in response to this notice will be summarized and included in the request for Office of Management and Budget approval. All comments will become a matter of public record. The public is invited to submit comments concerning: (a) Whether the collection of information is necessary for the proper execution of the function of the agency, including whether the information will have practical utility; (b) the accuracy of the agency's estimate of the burden of the collection of information, including the validity of the methodology and assumptions used; (c) ways to enhance the quality, utility, and clarity of the information to be collected; and (d) ways to minimize the burden of the collection of the information on the respondents, including the use of automated collection techniques or other forms of information technology.

By Gerard Poliquin, Secretary of the Board, the National Credit Union Administration, on June 13, 2019.

Dated: June 13, 2019.

Mackie I. Malaka,

NCUA PRA Clearance Officer.

[FR Doc. 2019–12821 Filed 6–17–19; 8:45 am]

BILLING CODE 7535–01–P

NATIONAL SCIENCE FOUNDATION

Request for Information on Update to Strategic Computing Objectives

AGENCY: Networking and Information Technology Research and Development (NITRD) National Coordination Office (NCO), National Science Foundation.

ACTION: Notice of request for information.

SUMMARY: On behalf of the National Science and Technology Council's (NSTC) Fast-Track Action Committee (FTAC) on Strategic Computing (SC), NITRD NCO requests input from all interested parties on the goals and necessary approaches for sustaining and enhancing U.S. scientific, technological, and economic leadership in strategic computing.

DATES: Comments must be submitted on or before 11:59 p.m. (ET) on August 23, 2019.

ADDRESSES: Comments may be sent by any of the following methods:

- *Email: StrategicComputing@nitrd.gov.* Email submissions should be machine-readable and not be copy-protected. Submissions should include ''RFI Response: Strategic Computing Research and Development'' in the subject line of the message.
- *Fax:* (202) 459–9673, Attn: Ji Lee; or
- *Mail:* Attn: Ji Lee, NITRD NCO, 2415 Eisenhower Avenue, Alexandria, VA 22314, USA.

Instructions: Response to this RFI is voluntary. Each individual or institution is requested to submit only one response. Submissions must not exceed 10 pages in 12 point or larger font, with a page number provided on each page. Responses should include the name of the person(s) or organization(s) filing the comment.

Responses to this RFI may be posted online at *http://www.nitrd.gov.* Therefore, we request that no business proprietary information, copyrighted information, or personally identifiable information be submitted in response to this RFI.

In accordance with FAR 15.202(3), responses to this notice are not offers and cannot be accepted by the Federal government to form a binding contract. Responders are solely responsible for all expenses associated with responding to this RFI.

FOR FURTHER INFORMATION CONTACT: Ji Lee at (202) 459–9674 or *StrategicComputing@nitrd.gov,* or by mail to 2415 Eisenhower Avenue, Alexandria, VA 22314, USA. Individuals who use a telecommunications device for the deaf (TDD) may call the Federal Information Relay Service (FIRS) at 1–800–877–8339 between 8 a.m. and 8 p.m., Eastern time, Monday through Friday.

SUPPLEMENTARY INFORMATION: The National Science and Technology Council's (NSTC) Fast-Track Action Committee (FTAC) on Strategic Computing (SC), NITRD NCO requests input from all interested parties on the goals and necessary approaches for sustaining and enhancing U.S. scientific, technological, and economic leadership in strategic computing. This includes the national high-performance computing ecosystem (as outlined in the National Stratetic Computing Initiative Strategic Plan) as well as research, development, and deployment. This Request for Information (RFI) seeks input on whether the strategic computing objectives should be revised and, if so, how. Comments about existing strategic objectives (*i.e.,* suggestions to add, remove, or modify the objectives) and their past or future implementation by the Federal government are requested. All interested parties including those engaged in strategic computing research and development (R&D) and those affected by such R&D are welcome to respond. Responses will inform the NITRD NCO and the FTAC on SC on updating the goals and approaches for strategic computing R&D.

Background: In 2015, the *National Strategic Computing Initiative (NSCI)* was launched to sustain and enhance U.S. leadership in strategic computing. The NSCI Strategic Plan, released in 2016, established five strategic objectives in collaboration with industry and academia:

1. *Accelerating the delivery of capable exascale computing systems*
2. *Increasing technology coherence between technology base used for modeling and simulation and that used for data analytic computing*
3. *Establishing, over the next 15 years, a viable path forward for future HPC systems, even after the limits*

of current semiconductor technology are reached

4. Creating an enduring national HPC ecosystem

5. Developing an enduring public-private partnership to ensure that the benefits of the research and development advances are, to the greatest extent, shared between the United States Government and industrial and academic sectors

Since the launch of NSCI, there have been significant near- and long-term advances that support the efforts towards exascale computing. There have also been changes in the technology landscape such as: The availability of resources and usage models, the nature and requirements of applications, and the means and methods of implementation. Examples include the increasing role of network-centric and edge computing; the need for improved software interoperability and sustainability; the availability of new approaches for hardware-specific compute; and concerns regarding the long-term future of computing architectures and underlying technologies. As a result, it is appropriate to reexamine, as a nation, the objectives of SC.

The Administration chartered the FTAC on SC under the NSTC to update the goals and approaches to strategic computing R&D and ensure continued and sustained U.S. leadership in SC. In consultation with the NSTC Artificial Intelligence Select Committee, the NITRD Subcommittee, the Subcommittee on Quantum Information Systems, and the Lab2Market Subcommittee, FTAC members will consider respondent's input in developing a SC R&D update report.

Responders are asked to answer one or more of the following questions in the responses to the RFI:

1. What are emerging and future scientific and technical challenges and opportunities that are central to ensuring American leadership in SC, and what are effective mechanisms for addressing these challenges?

2. What are appropriate models for partnerships between government, academia and industry in SC, and how can these partnerships be effectively leveraged to advance the objectives of SC?

3. How do we develop and nurture the capable workforce with the necessary skill and competencies to ensure American leadership in SC? What are effective nontraditional approaches to lowering the barriers to knowledge transfer?

4. How can technical advances in SC and other large government and private initiatives, including infrastructure advances, provide new knowledge and mechanisms for executing next generation research?

5. What are the future national-level use cases that will drive new computing paradigms, and how will new computing paradigms yield new use cases?

6. What areas of research or topics of the 2016 NSCI Strategic Plan should continue to be a priority for federally funded research and require continued Federal R&D investments? What areas of research or topics of the 2016 Strategic Plan no longer need to be prioritized for federally funded research?

7. What challenges or objectives not included in the 2016 NSCI Strategic Plan should be strategic priorities for the federally funded SC R&D? Discuss what new capabilities would be desired, what objectives should guide such research, and why those capabilities and objective should be strategic priorities.

Reference: 2016 *NSCI Strategic Plan: https://www.whitehouse.gov/sites/whitehouse.gov/files/images/NSCI%20Strategic%20Plan_20160721.pdf.pdf.*

Submitted by the National Science Foundation in support of the Networking and Information Technology Research and Development (NITRD) National Coordination Office (NCO) on June 13, 2019.

(Authority: 42 U.S.C. 1861.)

Suzanne H. Plimpton,

Reports Clearance Officer, National Science Foundation.

[FR Doc. 2019–12866 Filed 6–17–19; 8:45 am]

BILLING CODE 7555–01–P

NUCLEAR REGULATORY COMMISSION

[NRC–2019–0135]

Biweekly Notice; Applications and Amendments to Facility Operating Licenses and Combined Licenses Involving No Significant Hazards Considerations

AGENCY: Nuclear Regulatory Commission.

ACTION: Biweekly notice.

SUMMARY: Pursuant to the Atomic Energy Act of 1954, as amended (the Act), the U.S. Nuclear Regulatory Commission (NRC) is publishing this regular biweekly notice. The Act requires the Commission to publish notice of any amendments issued, or proposed to be issued, and grants the Commission the authority to issue and make immediately effective any amendment to an operating license or combined license, as applicable, upon a determination by the Commission that such amendment involves no significant hazards consideration, notwithstanding the pendency before the Commission of a request for a hearing from any person.

This biweekly notice includes all notices of amendments issued, or proposed to be issued, from May 21, 2019 to June 3, 2019. The last biweekly notice was published on June 4, 2019.

DATES: Comments must be filed by July 18, 2019. A request for a hearing must be filed by August 19, 2019.

ADDRESSES: You may submit comments by any of the following methods (unless this document describes a different method for submitting comments on a specific subject):

- *Federal Rulemaking Website:* Go to *http://www.regulations.gov* and search for *Docket ID NRC–2019–0135.* Address questions about NRC dockets IDs in *Regulations.gov* to Jennifer Borges; telephone: 301–287–9127; email: *Jennifer.Borges@nrc.gov.* For technical questions, contact the individual(s) listed in the **FOR FURTHER INFORMATION CONTACT** section of this document.
- *Mail comments to:* Office of Administration, Mail Stop: TWFN–7–A60M, U.S. Nuclear Regulatory Commission, Washington, DC 20555–0001, ATTN: Program Management, Announcements and Editing Staff.

For additional direction on obtaining information and submitting comments, see ''Obtaining Information and Submitting Comments'' in the **SUPPLEMENTARY INFORMATION** section of this document.

FOR FURTHER INFORMATION CONTACT: Beverly Clayton, Office of Nuclear Reactor Regulation, U.S. Nuclear Regulatory Commission, Washington, DC 20555–0001; telephone: 301–415–3475, email: *Beverly.Clayton@nrc.gov.*

SUPPLEMENTARY INFORMATION:

I. Obtaining Information and Submitting Comments

A. Obtaining Information

Please refer to *Docket ID NRC–2019–0135* facility name, unit number(s), plant docket number, application date, and subject when contacting the NRC about the availability of information for this action. You may obtain publicly-available information related to this action by any of the following methods:

- *Federal Rulemaking Website:* Go to *http://www.regulations.gov* and search for *Docket ID NRC–2019–0135.*
- *NRC's Agencywide Documents Access and Management System (ADAMS):* You may obtain publicly-

available documents online in the ADAMS Public Documents collection at *http://www.nrc.gov/reading-rm/adams.html.* To begin the search, select ''Begin Web-based ADAMS Search.'' For problems with ADAMS, please contact the NRC's Public Document Room (PDR) reference staff at 1–800–397–4209, 301–415–4737, or by email to *pdr.resource@nrc.gov* The ADAMS accession number for each document referenced (if it is available in ADAMS) is provided the first time that it is mentioned in this document.

- *NRC's PDR:* You may examine and purchase copies of public documents at the NRC's PDR, Room O1–F21, One White Flint North, 11555 Rockville Pike, Rockville, Maryland 20852.

B. Submitting Comments

Please include *Docket ID NRC–2019–0135* facility name, unit number(s), plant docket number, application date, and subject in your comment submission.

The NRC cautions you not to include identifying or contact information that you do not want to be publicly disclosed in your comment submission. The NRC will post all comment submissions at *http://www.regulations.gov* as well as enter the comment submissions into ADAMS. The NRC does not routinely edit comment submissions to remove identifying or contact information.

If you are requesting or aggregating comments from other persons for submission to the NRC, then you should inform those persons not to include identifying or contact information that they do not want to be publicly disclosed in their comment submission. Your request should state that the NRC does not routinely edit comment submissions to remove such information before making the comment submissions available to the public or entering the comment into ADAMS.

II. Background

Pursuant to Section 189a.(2) of the Atomic Energy Act of 1954, as amended (the Act), the U.S. Nuclear Regulatory Commission (NRC) is publishing this regular biweekly notice. The Act requires the Commission to publish notice of any amendments issued, or proposed to be issued, and grants the Commission the authority to issue and make immediately effective any amendment to an operating license or combined license, as applicable, upon a determination by the Commission that such amendment involves no significant hazards consideration, notwithstanding the pendency before the Commission of a request for a hearing from any person.

III. Notice of Consideration of Issuance of Amendments to Facility Operating Licenses and Combined Licenses and Proposed No Significant Hazards Consideration Determination

The Commission has made a proposed determination that the following amendment requests involve no significant hazards consideration. Under the Commission's regulations in section 50.92 of title 10 of the *Code of Federal Regulations* (10 CFR), this means that operation of the facility in accordance with the proposed amendment would not (1) involve a significant increase in the probability or consequences of an accident previously evaluated; or (2) create the possibility of a new or different kind of accident from any accident previously evaluated; or (3) involve a significant reduction in a margin of safety. The basis for this proposed determination for each amendment request is shown below.

The Commission is seeking public comments on this proposed determination. Any comments received within 30 days after the date of publication of this notice will be considered in making any final determination.

Normally, the Commission will not issue the amendment until the expiration of 60 days after the date of publication of this notice. The Commission may issue the license amendment before expiration of the 60-day period provided that its final determination is that the amendment involves no significant hazards consideration. In addition, the Commission may issue the amendment prior to the expiration of the 30-day comment period if circumstances change during the 30-day comment period such that failure to act in a timely way would result, for example in derating or shutdown of the facility. If the Commission takes action prior to the expiration of either the comment period or the notice period, it will publish in the **Federal Register** a notice of issuance. If the Commission makes a final no significant hazards consideration determination, any hearing will take place after issuance. The Commission expects that the need to take this action will occur very infrequently.

A. Opportunity To Request a Hearing and Petition for Leave To Intervene

Within 60 days after the date of publication of this notice, any persons (petitioner) whose interest may be affected by this action may file a request for a hearing and petition for leave to intervene (petition) with respect to the action. Petitions shall be filed in accordance with the Commission's ''Agency Rules of Practice and Procedure'' in 10 CFR part 2. Interested persons should consult a current copy of 10 CFR 2.309. The NRC's regulations are accessible electronically from the NRC Library on the NRC's website at *http://www.nrc.gov/reading-rm/doc-collections/cfr/.* Alternatively, a copy of the regulations is available at the NRC's Public Document Room, located at One White Flint North, Room O1–F21, 11555 Rockville Pike (first floor), Rockville, Maryland 20852. If a petition is filed, the Commission or a presiding officer will rule on the petition and, if appropriate, a notice of a hearing will be issued.

As required by 10 CFR 2.309(d) the petition should specifically explain the reasons why intervention should be permitted with particular reference to the following general requirements for standing: (1) The name, address, and telephone number of the petitioner; (2) the nature of the petitioner's right under the Act to be made a party to the proceeding; (3) the nature and extent of the petitioner's property, financial, or other interest in the proceeding; and (4) the possible effect of any decision or order which may be entered in the proceeding on the petitioner's interest.

In accordance with 10 CFR 2.309(f), the petition must also set forth the specific contentions which the petitioner seeks to have litigated in the proceeding. Each contention must consist of a specific statement of the issue of law or fact to be raised or controverted. In addition, the petitioner must provide a brief explanation of the bases for the contention and a concise statement of the alleged facts or expert opinion which support the contention and on which the petitioner intends to rely in proving the contention at the hearing. The petitioner must also provide references to the specific sources and documents on which the petitioner intends to rely to support its position on the issue. The petition must include sufficient information to show that a genuine dispute exists with the applicant or licensee on a material issue of law or fact. Contentions must be limited to matters within the scope of the proceeding. The contention must be one which, if proven, would entitle the petitioner to relief. A petitioner who fails to satisfy the requirements at 10 CFR 2.309(f) with respect to at least one contention will not be permitted to participate as a party.

Those permitted to intervene become parties to the proceeding, subject to any limitations in the order granting leave to intervene. Parties have the opportunity

to participate fully in the conduct of the hearing with respect to resolution of that party's admitted contentions, including the opportunity to present evidence, consistent with the NRC's regulations, policies, and procedures.

Petitions must be filed no later than 60 days from the date of publication of this notice. Petitions and motions for leave to file new or amended contentions that are filed after the deadline will not be entertained absent a determination by the presiding officer that the filing demonstrates good cause by satisfying the three factors in 10 CFR 2.309(c)(1)(i) through (iii). The petition must be filed in accordance with the filing instructions in the ''Electronic Submissions (E-Filing)'' section of this document.

If a hearing is requested, and the Commission has not made a final determination on the issue of no significant hazards consideration, the Commission will make a final determination on the issue of no significant hazards consideration. The final determination will serve to establish when the hearing is held. If the final determination is that the amendment request involves no significant hazards consideration, the Commission may issue the amendment and make it immediately effective, notwithstanding the request for a hearing. Any hearing would take place after issuance of the amendment. If the final determination is that the amendment request involves a significant hazards consideration, then any hearing held would take place before the issuance of the amendment unless the Commission finds an imminent danger to the health or safety of the public, in which case it will issue an appropriate order or rule under 10 CFR part 2.

A State, local governmental body, Federally-recognized Indian Tribe, or agency thereof, may submit a petition to the Commission to participate as a party under 10 CFR 2.309(h)(1). The petition should state the nature and extent of the petitioner's interest in the proceeding. The petition should be submitted to the Commission no later than 60 days from the date of publication of this notice. The petition must be filed in accordance with the filing instructions in the ''Electronic Submissions (E-Filing)'' section of this document, and should meet the requirements for petitions set forth in this section, except that under 10 CFR 2.309(h)(2) a State, local governmental body, or Federally-recognized Indian Tribe, or agency thereof does not need to address the standing requirements in 10 CFR 2.309(d) if the facility is located within its boundaries. Alternatively, a State, local governmental body, Federally-recognized Indian Tribe, or agency thereof may participate as a non-party under 10 CFR 2.315(c).

If a hearing is granted, any person who is not a party to the proceeding and is not affiliated with or represented by a party may, at the discretion of the presiding officer, be permitted to make a limited appearance pursuant to the provisions of 10 CFR 2.315(a). A person making a limited appearance may make an oral or written statement of his or her position on the issues but may not otherwise participate in the proceeding. A limited appearance may be made at any session of the hearing or at any prehearing conference, subject to the limits and conditions as may be imposed by the presiding officer. Details regarding the opportunity to make a limited appearance will be provided by the presiding officer if such sessions are scheduled.

B. Electronic Submissions (E-Filing)

All documents filed in NRC adjudicatory proceedings, including a request for hearing and petition for leave to intervene (petition), any motion or other document filed in the proceeding prior to the submission of a request for hearing or petition to intervene, and documents filed by interested governmental entities that request to participate under 10 CFR 2.315(c), must be filed in accordance with the NRC's E-Filing rule (72 FR 49139; August 28, 2007, as amended at 77 FR 46562; August 3, 2012). The E-Filing process requires participants to submit and serve all adjudicatory documents over the internet, or in some cases to mail copies on electronic storage media. Detailed guidance on making electronic submissions may be found in the Guidance for Electronic Submissions to the NRC and on the NRC website at *http://www.nrc.gov/site-help/e-submittals.html.* Participants may not submit paper copies of their filings unless they seek an exemption in accordance with the procedures described below.

To comply with the procedural requirements of E-Filing, at least 10 days prior to the filing deadline, the participant should contact the Office of the Secretary by email at *hearing.docket@nrc.gov,* or by telephone at 301–415–1677, to (1) request a digital identification (ID) certificate, which allows the participant (or its counsel or representative) to digitally sign submissions and access the E-Filing system for any proceeding in which it is participating; and (2) advise the Secretary that the participant will be submitting a petition or other adjudicatory document (even in instances in which the participant, or its counsel or representative, already holds an NRC-issued digital ID certificate). Based upon this information, the Secretary will establish an electronic docket for the hearing in this proceeding if the Secretary has not already established an electronic docket.

Information about applying for a digital ID certificate is available on the NRC's public website at *http://www.nrc.gov/site-help/e-submittals/getting-started.html.* Once a participant has obtained a digital ID certificate and a docket has been created, the participant can then submit adjudicatory documents. Submissions must be in Portable Document Format (PDF). Additional guidance on PDF submissions is available on the NRC's public website at *http://www.nrc.gov/site-help/electronic-sub-ref-mat.html.* A filing is considered complete at the time the document is submitted through the NRC's E-Filing system. To be timely, an electronic filing must be submitted to the E-Filing system no later than 11:59 p.m. Eastern Time on the due date. Upon receipt of a transmission, the E-Filing system time-stamps the document and sends the submitter an email notice confirming receipt of the document. The E-Filing system also distributes an email notice that provides access to the document to the NRC's Office of the General Counsel and any others who have advised the Office of the Secretary that they wish to participate in the proceeding, so that the filer need not serve the document on those participants separately. Therefore, applicants and other participants (or their counsel or representative) must apply for and receive a digital ID certificate before adjudicatory documents are filed so that they can obtain access to the documents via the E-Filing system.

A person filing electronically using the NRC's adjudicatory E-Filing system may seek assistance by contacting the NRC's Electronic Filing Help Desk through the ''Contact Us'' link located on the NRC's public website at *http://www.nrc.gov/site-help/e-submittals.html,* by email to *MSHD.Resource@nrc.gov,* or by a toll-free call at 1–866–672–7640. The NRC Electronic Filing Help Desk is available between 9 a.m. and 6 p.m., Eastern Time, Monday through Friday, excluding government holidays.

Participants who believe that they have a good cause for not submitting documents electronically must file an exemption request, in accordance with 10 CFR 2.302(g), with their initial paper

filing stating why there is good cause for not filing electronically and requesting authorization to continue to submit documents in paper format. Such filings must be submitted by: (1) First class mail addressed to the Office of the Secretary of the Commission, U.S. Nuclear Regulatory Commission, Washington, DC 20555–0001, Attention: Rulemaking and Adjudications Staff; or (2) courier, express mail, or expedited delivery service to the Office of the Secretary, 11555 Rockville Pike, Rockville, Maryland 20852, Attention: Rulemaking and Adjudications Staff. Participants filing adjudicatory documents in this manner are responsible for serving the document on all other participants. Filing is considered complete by first-class mail as of the time of deposit in the mail, or by courier, express mail, or expedited delivery service upon depositing the document with the provider of the service. A presiding officer, having granted an exemption request from using E-Filing, may require a participant or party to use E-Filing if the presiding officer subsequently determines that the reason for granting the exemption from use of E-Filing no longer exists.

Documents submitted in adjudicatory proceedings will appear in the NRC's electronic hearing docket which is available to the public at *https://adams.nrc.gov/ehd,* unless excluded pursuant to an order of the Commission or the presiding officer. If you do not have an NRC-issued digital ID certificate as described above, click ''cancel'' when the link requests certificates and you will be automatically directed to the NRC's electronic hearing dockets where you will be able to access any publicly available documents in a particular hearing docket. Participants are requested not to include personal privacy information, such as social security numbers, home addresses, or personal phone numbers in their filings, unless an NRC regulation or other law requires submission of such information. For example, in some instances, individuals provide home addresses in order to demonstrate proximity to a facility or site. With respect to copyrighted works, except for limited excerpts that serve the purpose of the adjudicatory filings and would constitute a Fair Use application, participants are requested not to include copyrighted materials in their submission.

For further details with respect to these license amendment applications, see the application for amendment which is available for public inspection in ADAMS and at the NRC's PDR. For additional direction on accessing information related to this document, see the ''Obtaining Information and Submitting Comments'' section of this document.

Energy Northwest, Docket No. 50–397, Columbia Generating Station (Columbia), Benton County, Washington

Date of amendment request: March 27, 2019. A publicly available version is in ADAMS under Accession No. ML19086A315.

Description of amendment request: The proposed amendment would remove License Condition 2.C.(11), ''Shield Wall Deferral (Section 12.3.2, SSER #4, License Amendment #7)'' and its related Attachment 3, ''List of Shield Walls'' from Columbia's Renewed Facility Operating License, as these items are outdated and no longer applicable to Columbia's operation.

Basis for proposed no significant hazards consideration determination: As required by 10 CFR 50.91(a), the licensee has provided its analysis of the issue of no significant hazards consideration, which is presented below:

1. Does the proposed change involve a significant increase in the probability or consequences of an accident previously evaluated?

Response: No.

The proposed amendment involves the removal of an outdated license condition. The proposed amendment does not impact any accident initiators, analyzed events, or assumed mitigation of accident or transient events. The proposed change does not involve the addition or removal of any equipment or any design changes to the facility. The proposed change does not affect any plant operations, design functions, or analyses that verify the capability of structures, systems, and components (SSCs) to perform a design function. The proposed change does not change any of the accidents previously evaluated in the Final Safety Analysis Report (FSAR). The proposed change does not affect SSCs, operating procedures, and administrative controls that have the function of preventing or mitigating any of these accidents.

Therefore, the proposed change does not represent a significant increase in the probability or consequences of an accident previously evaluated.

2. Does the proposed change create the possibility of a new or different kind of accident from any accident previously evaluated?

Response: No.

The proposed amendment only involves the removal of an outdated license condition. No actual plant equipment or accident analyses will be affected by the proposed change. The proposed change will not change the design function or operation of any SSCs. The proposed change will not result in any new failure mechanisms, malfunctions, or accident initiators not considered in the design and licensing bases. The proposed amendment does not impact any accident initiators, analyzed events, or assumed mitigation of accident or transient events.

Therefore, this proposed change does not create the possibility of an accident of a new or different kind than previously evaluated.

3. Does the proposed change involve a significant reduction in a margin of safety?

Response: No.

The proposed amendment only involves the removal of an outdated license condition. The proposed change does not involve any physical changes to the plant or alter the manner in which plant systems are operated, maintained, modified, tested, or inspected. The proposed change does not alter the manner in which safety limits, limiting safety system settings or limiting conditions for operation are determined. The safety analysis acceptance criteria are not affected by this change. The proposed change will not result in plant operation in a configuration outside the design basis. The proposed change does not adversely affect systems that respond to safely shutdown the plant and to maintain the plant in a safe shutdown condition.

Therefore, the proposed change does not involve a significant reduction in a margin of safety.

The NRC staff has reviewed the licensee's analysis and, based on this review, it appears that the three standards of 10 CFR 50.92(c) are satisfied. Therefore, the NRC staff proposes to determine that the amendment request involves no significant hazards consideration.

Attorney for licensee: William A. Horin, Esq., Winston & Strawn, 1700 K Street NW, Washington, DC 20006–3817.

NRC Branch Chief: Robert J. Pascarelli.

Entergy Nuclear Operations, Inc., Docket Nos. 50–003, 50–247, and 50–286, Indian Point Nuclear Generating (Indian Point) Unit Nos. 1, 2, and 3, Westchester County, New York

Date of amendment request: April 15, 2019. A publicly available version is in ADAMS under Accession No. ML19105B278.

Description of amendment request: The amendments would revise the Indian Point Site Emergency Plan (SEP) for the permanently shutdown and defueled condition.

Basis for proposed no significant hazards consideration determination: As required by 10 CFR 50.91(a), the licensee has provided its analysis of the issue of no significant hazards consideration, which is presented below:

1. Does the proposed amendment involve a significant increase in the probability or consequences of an accident previously evaluated?

Response: No.

The proposed changes to the IPEC [Indian Point Energy Center] SEP do not impact the

function of plant structures, systems, or components (SSCs). The proposed changes do not affect accident initiators or precursors, nor does it alter design assumptions. The proposed changes do not prevent the ability of the on-shift staff and augmented ERO [Emergency Response Organization] to perform their intended functions to mitigate the consequences of any accident or event that will be credible in the permanently shut down and defueled condition. The proposed changes only remove positions that will no longer be credited in the IPEC SEP.

Therefore, the proposed amendment does not involve a significant increase in the probability or consequences of an accident previously evaluated.

2. Does the proposed amendment create the possibility of a new or different kind of accident from any accident previously evaluated?

Response: No.

The proposed changes reduce the number of on-shift and augmented ERO positions commensurate with the hazards associated with a permanently shut down and defueled facility. The proposed changes do not involve installation of new equipment or modification of existing equipment, so that no new equipment failure modes are introduced. Also, the proposed changes do not result in a change to the way that the equipment or facility is operated so that no new accident initiators are created.

Therefore, the proposed amendment does not create the possibility of a new or different kind of accident from any previously evaluated.

3. Does the proposed amendment involve a significant reduction in a margin of safety?

Response: No.

Margin of safety is associated with confidence in the ability of the fission product barriers (*i.e.,* fuel cladding, reactor coolant system pressure boundary, and containment structure) to limit the level of radiation dose to the public. The proposed changes are associated with the IPEC SEP and do not impact operation of the plant or its response to transients or accidents. The change does not affect the Technical Specifications. The proposed changes do not involve a change in the method of plant operation, and no accident analyses will be affected by the proposed changes. Safety analysis acceptance criteria are not affected by the proposed changes. The revised IPEC SEP will continue to provide the necessary response staff with the proposed changes.

Therefore, the proposed amendment does not involve a significant reduction in a margin of safety.

The NRC staff has reviewed the licensee's analysis and, based on this review, it appears that the three standards of 10 CFR 50.92(c) are satisfied. Therefore, the NRC staff proposes to determine that the amendment request involves no significant hazards consideration.

Attorney for licensee: Jeanne Cho, Assistant General Counsel, Entergy Nuclear Operations, Inc., 440 Hamilton Avenue, White Plains, NY 10601.

NRC Branch Chief: James G. Danna.

Entergy Nuclear Operations, Inc., Docket Nos. 50–247 and 50–286, Indian Point Nuclear Generating Unit Nos. 2 and 3 (Indian Point 2 and 3 or IP2 and IP3), Westchester County, New York

Date of amendment request: April 15, 2019. A publicly available version is in ADAMS under Accession No. ML19105B236.

Description of amendment request: The amendments propose changes to the staffing and training requirements for the Indian Point staff contained in Section 5.0, ''Administrative Controls,'' of the Indian Point 2 and Indian Point 3 Technical Specifications (TSs). Additional changes are also proposed to Section 1.1, ''Definitions''; Section 4.0, ''Design Features''; and Section 5.0, ''Administrative Controls,'' that are no longer applicable to a permanently defueled facility once Indian Point 2, and subsequently Indian Point 3, are permanently defueled.

Basis for proposed no significant hazards consideration determination: As required by 10 CFR 50.91(a), the licensee has provided its analysis of the issue of no significant hazards consideration, which is presented below:

1. Does the proposed amendment involve a significant increase in the probability or consequences of an accident previously evaluated?

Response: No.

The proposed amendment would not take effect until IP2 has permanently ceased operation and entered a permanently defueled condition and the Certified Fuel Handler Training and Retraining Program is approved by the NRC. The proposed amendment would modify the IP2 TS by deleting the portions of the TS that are no longer applicable to a permanently defueled facility, while modifying the other sections to correspond to the permanently defueled condition.

The deletion and modification of provisions of the administrative controls do not directly affect the design of structures, systems, and components (SSCs) necessary for safe storage of irradiated fuel or the methods used for handling and storage of such fuel in the spent fuel pool. The changes to the administrative controls are administrative in nature and do not affect any accidents applicable to the safe management of irradiated fuel or the permanently shutdown and defueled condition of the reactor. Thus, the consequences of an accident previously evaluated are not increased.

In a permanently defueled condition, the only credible accidents are the fuel handling accident (FHA) and those involving radioactive waste systems remaining in service. The probability of occurrence of previously evaluated accidents is not increased, because extended operation in a defueled condition will be the only operation allowed. This mode of operation is bounded by the existing analyses. Additionally, the occurrence of postulated accidents associated with reactor operation is no longer credible in a permanently defueled reactor. This significantly reduces the scope of applicable accidents.

Therefore, the proposed amendment does not involve a significant increase in the probability or consequences of an accident previously evaluated.

2. Does the proposed amendment create the possibility of a new or different kind of accident from any accident previously evaluated?

Response: No.

The proposed changes have no impact on facility SSCs affecting the safe storage of irradiated fuel, or on the methods of operation of such SSCs, or on the handling and storage of irradiated fuel itself. The administrative removal or modifications of the TS that are related only to administration of the facility cannot result in different or more adverse failure modes or accidents than previously evaluated because the reactor will be permanently shutdown and defueled and IP2 will no longer be authorized to operate the reactor or retain or place fuel in the reactor vessel.

The proposed changes to the IP2 TS do not affect systems credited in the accident analysis for the FHA or radioactive waste system upsets at IP2. The proposed TS will continue to require proper control and monitoring of safety significant parameters and activities.

The proposed amendment does not result in any new mechanisms that could initiate damage to the remaining relevant safety barriers for defueled plants (fuel cladding and spent fuel cooling). Extended operation in a defueled condition will be the only operation allowed, and it is bounded by the existing analyses, such a condition does not create the possibility of a new or different kind of accident.

Therefore, the proposed change does not create the possibility of a new or different kind of accident from any previously evaluated.

3. Does the proposed amendment involve a significant reduction in a margin of safety?

Since the 10 CFR part 50 license for IP2 will no longer authorize operation of the reactor or emplacement or retention of fuel into the reactor vessel once the certifications required by 10 CFR 50.82(a)(1) are docketed, as specified in 10 CFR 50.82(a)(2), the occurrence of postulated accidents associated with reactor operation is no longer credible. The only remaining credible accidents are a FHA and those involving radioactive waste systems remaining in service. The proposed amendment does not adversely affect the inputs or assumptions of any of the design basis analyses that impact these analyzed conditions.

The proposed changes are limited to those portions of the TS that are not related to the safe storage of irradiated fuel. The requirements that are proposed to be revised or deleted from the IP2 TS are not credited in the existing accident analysis for the remaining applicable postulated accident;

and as such, do not contribute to the margin of safety associated with the accident analysis. Postulated design basis accidents involving the reactor are no longer possible because the reactor will be permanently shutdown and defueled and IP2 will no longer be authorized to operate the reactor or retain or place fuel in the reactor vessel.

Therefore, the proposed change does not involve a significant reduction in the margin of safety.

The NRC staff has reviewed the licensee's analysis and, based on this review, it appears that the three standards of 10 CFR 50.92(c) are satisfied. Therefore, the NRC staff proposes to determine that the amendment request involves no significant hazards consideration.

Attorney for licensee: Jeanne Cho, Assistant General Counsel, Entergy Nuclear Operations, Inc., 440 Hamilton Avenue, White Plains, NY 10601.

NRC Branch Chief: James G. Danna.

Entergy Nuclear Operations, Inc., Docket No. 50–247, Indian Point Nuclear Generating Unit No. 2 (Indian Point 2 or IP2), Westchester County, New York

Date of amendment request: April 15, 2019. A publicly available version is in ADAMS under Accession No. ML19105B241.

Description of amendment request: The amendment would revise the Indian Point 2 Operating License (OL) and revise the Technical Specifications (TSs) in Appendix A to Permanently Defueled TSs, the Environmental TS Requirements in Appendix B of the OL, and the Inter-Unit Transfer TSs in Appendix C. The proposed changes would revise certain requirements contained within the Indian Point 2 OL and Appendices A through C TSs and remove the requirements that would no longer be applicable after Indian Point 2 is permanently shut down and defueled.

Basis for proposed no significant hazards consideration determination: As required by 10 CFR 50.91(a), the licensee has provided its analysis of the issue of no significant hazards consideration, which is presented below:

1. Does the proposed amendment involve a significant increase in the probability or consequences of an accident previously evaluated?

Response: No.

The proposed amendment would not take effect until IP2 has permanently ceased operation, entered a permanently defueled condition, met the decay requirements established in the analysis of the Fuel Handling Accident (FHA), implemented NRC approved License Amendments regarding fuel storage requirements and administrative controls for the permanently defueled condition, and received NRC approval of the Certified Fuel Handler Training and Retraining Program. The proposed amendment would modify the IP2 OL and TSs in Appendices A through C by deleting the portions of the OL and TSs that are no longer applicable to a permanently defueled facility, while modifying other portions to correspond to the permanently defueled condition. These proposed changes are consistent with the criteria set forth in 10 CFR 50.36 for the contents of TSs.

Section 14 of the IP2 Updated Final Safety Analysis Report (UFSAR) describes the DBA [design-basis accident] and transient scenarios applicable to IP2 during power operations. After the reactor is in a permanently defueled condition, the spent fuel pit (SFP) and its cooling systems will be dedicated only to spent fuel storage. In this condition, the spectrum of credible accidents will be much smaller than for an operational plant. After the certifications are docketed for IP2 in accordance with 10 CFR 50.82(a)(1), and the consequent removal of authorization to operate the reactor or to place or retain fuel in the reactor vessel in accordance with 10 CFR 50.82(a)(2), the majority of the accident scenarios previously postulated in the UFSAR will no longer be possible and will be removed from the UFSAR under the provisions of 10 CFR 50.59.

The deletion of TS definitions and rules of usage and application requirements that will not be applicable in a defueled condition has no impact on facility structures, systems, and components (SSCs) or the methods of operation of such SSCs. The deletion of design features and safety limits not applicable to the permanently shut down and defueled status of IP2 has no impact on the remaining applicable DBAs.

The removal of LCOs [limiting conditions for operation] or SRs [surveillance requirements] that are related only to the operation of the nuclear reactor or only to the prevention, diagnosis, or mitigation of reactor-related transients or accidents do not affect the applicable DBAs previously evaluated since these DBAs are no longer applicable in the permanently defueled condition. The safety functions involving core reactivity control, reactor heat removal, reactor coolant system (RCS) inventory control, and containment integrity are no longer applicable at IP2 as a permanently shut down and defueled facility. The analyzed accidents involving damage to the RCS, main steam lines, reactor core, and the subsequent release of radioactive material will no longer be possible at IP2.

After IP2 permanently ceases operation, the future generation of fission products will cease and the remaining source term will decay. The radioactive decay of the irradiated fuel following shut down of the reactor will have reduced the consequences of the FHA below those previously analyzed.

The SFP water level, boron concentration, and fuel storage TSs are retained to preserve the current requirements for safe storage of irradiated fuel. SFP cooling and make-up related equipment and support equipment (*e.g.,* electrical power systems) are not required to be continuously available since there will be sufficient time to effect repairs, establish alternate sources of make-up flow, or establish alternate sources of cooling in the event of a loss of cooling and make-up flow to the SFP.

The deletion and modification of provisions of the administrative controls of the Appendix A TSs and the non-radiological environmental protection requirements in Appendix B do not directly affect the design of SSCs necessary for safe storage of irradiated fuel or the methods used for handling and storage of such fuel in the SFP. The changes do not affect any accidents applicable to the safe management of irradiated fuel or the permanently shut down and defueled condition of the reactor.

The probability of occurrence of previously evaluated accidents is not increased, since extended operation in a defueled condition will be the only operation allowed, and therefore bounded by the existing analyses. Additionally, the occurrence of postulated accidents associated with reactor operation will no longer be credible in a permanently defueled reactor. This significantly reduces the scope of applicable accidents.

Therefore, the proposed amendment does not involve a significant increase in the probability or consequences of an accident previously evaluated.

2. Does the proposed amendment create the possibility of a new or different kind of accident from any accident previously evaluated?

Response: No.

The proposed changes to the IP2 OL and Appendices A through C TSs have no impact on facility SSCs affecting the safe storage of irradiated fuel, or on the methods of operation of such SSCs, or on the handling and storage of irradiated fuel itself. The removal of TSs that are related only to the operation of the nuclear reactor or only to the prevention, diagnosis, or mitigation of reactor-related transients or accidents, cannot result in different or more adverse failure modes or accidents than previously evaluated because the reactor will be permanently shut down and defueled and IP2 will no longer be authorized to operate the reactor.

The proposed deletion and modification of requirements of the IP2 OL and Appendices A through C TSs do not affect systems credited in the accidents that remain applicable at IP2 in the permanently defueled condition. The proposed OL and TSs will continue to require proper control and monitoring of safety significant parameters and activities.

The Appendix A TSs regarding SFP water level, boron concentration, and fuel storage are retained to preserve the current requirements for safe storage of irradiated fuel. The restriction on the SFP water level is fulfilled by normal operating conditions and preserves initial conditions assumed in the analyses of the postulated DBA.

The proposed amendment does not result in any new mechanisms that could initiate damage to the remaining relevant safety barriers for defueled plants (fuel cladding and spent fuel cooling). Since extended operation in a defueled condition will be the only operation allowed, and therefore

bounded by the existing analyses, such a condition does not create the possibility of a new or different kind of accident.

Therefore, the proposed amendment does not create the possibility of a new or different kind of accident from any previously evaluated.

3. Does the proposed amendment involve a significant reduction in a margin of safety?

Response: No.

Because the 10 CFR part 50 license for IP2 will no longer authorize operation of the reactor or emplacement or retention of fuel in the reactor vessel after the certifications required by 10 CFR 50.82(a)(1) are docketed for IP2 as specified in 10 CFR 50.82(a)(2), the occurrence of postulated accidents associated with reactor operation are no longer credible. The only remaining credible accidents are the FHA and the accidental release of waste liquids or waste gas. The proposed amendment does not adversely affect the inputs or assumptions of any of the design basis analyses that impact the remaining DBAs.

The proposed amendment would modify the IP2 OL and TSs in Appendices A through C by deleting the portions of the OL and TSs that are no longer applicable to a permanently defueled facility, while modifying other portions to correspond to the permanently defueled condition. The requirements that are proposed to be deleted from the IP2 OL and Appendix A TSs are not credited in the existing accident analyses for the remaining DBAs; and as such, do not contribute to the margin of safety associated with the accident analyses. Postulated DBAs involving the reactors will no longer be possible because the reactor will be permanently shut down and defueled and IP2 will no longer be authorized to operate the reactor.

The Appendix A TSs regarding SFP water level, boron concentration, and fuel storage are retained to preserve the current requirements for safe storage of irradiated fuel.

Therefore, the proposed amendment does not involve a significant reduction in the margin of safety.

The NRC staff has reviewed the licensee's analysis and, based on this review, it appears that the three standards of 10 CFR 50.92(c) are satisfied. Therefore, the NRC staff proposes to determine that the amendment request involves no significant hazards consideration.

Attorney for licensee: Jeanne Cho, Assistant General Counsel, Entergy Nuclear Operations, Inc., 440 Hamilton Avenue, White Plains, NY 10601.

NRC Branch Chief: James G. Danna.

Exelon Generation Company, LLC and PSEG Nuclear LLC, Docket Nos. 50–277 and 50–278, Peach Bottom Atomic Power Station, Units 2 and 3, York and Lancaster Counties, Pennsylvania

Date of amendment request: April 26, 2019. A publicly available version is in ADAMS under Accession No. ML19116A196.

Description of amendment request: The amendments would revise Peach Bottom Atomic Power Station, Units 2 and 3, Technical Specification (TS) 3.8.1, ''AC [Alternating Current] Power—Operating,'' Required Action A.3, to provide a temporary one-time extension of the completion time to allow sufficient time to perform physical modifications to replace 27 inaccessible electrical cables. These electrical cables are reaching the end of their dependable service life and are in need of replacement.

Basis for proposed no significant hazards consideration determination: As required by 10 CFR 50.91(a), the licensee has provided its analysis of the issue of no significant hazards consideration, which is presented below:

1. Does the proposed change involve a significant increase in the probability or consequences of an accident previously evaluated?

Response: No.

The proposed temporary one-time change to extend the Completion Time for TS 3.8.1, Required Action A.3, will not increase the probability of an accident, since the proposed Completion Time extension in the time duration that one qualified offsite circuit is out of service has no direct physical impact on the plant. The proposed inoperable offsite circuit limits the available redundancy of the offsite electrical system to a period not to exceed 21 days. Therefore, the proposed TS change does not have a direct impact on the plant that would make an accident more likely to occur due to extended Completion Time. Other sources of offsite and onsite power remain available.

During transients or events which require these systems/subsystems to be operating, there is sufficient capacity in the operable systems/subsystems to support plant operation or shutdown. Therefore, failures that are accident initiators will not occur more frequently than previously postulated as a result of the proposed temporary one-time TS change.

In addition, the consequences of an accident previously evaluated in the Updated Final Safety Analysis Report (UFSAR) will not be increased. With one offsite circuit inoperable, the consequences of any postulated accidents occurring on Unit 2 or Unit 3 during the proposed one-time Completion Time extension are bounded by the previous analyses as described in the UFSAR. The minimum equipment required to mitigate the consequences of an accident and/or safely shut down the plant will be operable or available during the extended Completion Time period of 21 days.

A risk evaluation has also been performed for the temporary one-time 21-day Completion Time extension. The evaluation concluded that the probability of a Loss of Offsite Power (LOOP) for the proposed configuration is very low. Therefore, the proposed change does not significantly increase the probability of an accident previously evaluated because: (a) The emergency buses continue to be fed from a reliable offsite source and; (b) the effect of the proposed configuration on the probability of a LOOP is very low.

Therefore, the proposed changes do not involve a significant increase in the probability or consequences of an accident previously evaluated.

2. Does the proposed change create possibility of a new or different kind of accident from any accident previously evaluated?

Response: No.

The proposed temporary one-time change to extend the Completion Time for TS 3.8.1, Required Action A.3, will not create the possibility of a new or different type of accident since it will only extend the time period that one of the offsite circuits can be out of service; the extension of the time duration for one offsite circuit being inoperable has no direct physical impact on the plant and does not create any new accident initiators. Other sources of offsite and onsite power remain available. The systems involved are accident mitigation systems. The possible impacts that the inoperable equipment may have on supported systems was previously analyzed in the UFSAR. The impact of inoperable support systems was also previously assessed, and any accident initiators created by the inoperable systems were evaluated. Extending the duration of the Completion Time does not create any additional accident initiators for the plant.

Therefore, the proposed changes do not create the possibility of a new or different kind of accident from any accident previously evaluated.

3. Does the proposed change involve a significant reduction in a margin of safety?

Response: No.

The existing TS Completion Time limit of seven (7) days for one offsite circuit inoperable was established to ensure that sufficient safety-related equipment is available for response to all accident conditions and that sufficient decay heat removal capability is available for a Loss of Coolant Accident (LOCA) coincident with a LOOP on one unit and simultaneous safe shutdown of the other unit. Although a very slight reduction in the margin of safety might be incurred during the proposed one-time extended Completion Time period, this slight reduction is judged to be minimal due to the low probability of an event occurring during the extended period. Other sources of offsite and onsite power remain available and operable during the 21-day extended period along with maintaining the availability of essential Emergency Core Cooling System (ECCS)/decay heat removal capability. The very slight reduction in the margin of safety resulting from extending the Completion Time from seven (7) days to 21 days when an offsite circuit is inoperable is not considered significant, since the remaining operable offsite circuit, the emergency Diesel Generators (DGs), the Station Blackout (SBO) line, and the FLEX DGs are available and provide an effective defense-in-depth plan to support the station electrical plant configurations during the extended 21-day Completion Time period.

The proposed TS change to extend the Completion Time does not affect the acceptance criteria for any analyzed event, nor is there a change to any safety limit. The proposed TS change does not affect any Structures, Systems or Components (SSC) or their capability to perform their intended functions. The proposed change does not alter the manner in which safety limits, limiting safety system settings, or limiting conditions for operation are determined. Neither the safety analyses nor the safety analysis acceptance criteria are affected by this change. The proposed change will not result in plant operation in a configuration outside the current design basis. The margin of safety is maintained by maintaining the capability to supply emergency buses with a redundant, separate, reliable offsite power source, and maintaining the onsite power sources in their design basis configuration.

Operations personnel are fully qualified and trained to respond to, and mitigate, a Design Basis Accident (DBA), including actions needed to ensure decay heat removal systems are available while PBAPS [Peach Bottom Atomic Power Station], Units 2 and 3, are in the operational electrical configurations described within this submittal. Accordingly, existing procedures are in place that address safe plant shutdown and decay heat removal for situations applicable during the extended one-time Completion Time period.

Therefore, the proposed changes do not involve a significant reduction in a margin of safety.

The NRC staff has reviewed the licensee's analysis and, based on this review, it appears that the three standards of 10 CFR 50.92(c) are satisfied. Therefore, the NRC staff proposes to determine that the amendment request involves no significant hazards consideration.

Attorney for licensee: Tamra Domeyer, Associate General Counsel, Exelon Generation Company, LLC, 4300 Winfield Road, Warrenville, IL 60555.

NRC Branch Chief: James G. Danna.

Exelon Generation Company, LLC, Docket No. 50–220, Nine Mile Point Nuclear Station, Unit 1, Oswego County, New York

Date of amendment request: June 26, 2018, as supplemented by letters dated February 25, 2019, and May 17, 2019 (ADAMS Accession Nos. ML18177A044, ML19056A387, and ML19137A070, respectively).

Description of amendment request: The license amendment request was originally noticed in the **Federal Register** on December 18, 2018 (83 FR 64894). This notice is being reissued in its entirety to include a revised description of the amendment request. The amendment would modify Technical Specification 3.3.1, ''Oxygen Concentration,'' to require inerting the primary containment to less than 4 percent by volume oxygen concentration within 72 hours of entering power operating condition. Also, the amendment would add a new requirement to identify required actions if the primary containment oxygen concentration increases to greater than or equal to four volume percent while in the power operating condition.

Basis for proposed no significant hazards consideration determination: As required by 10 CFR 50.91(a), the licensee has provided its analysis of the issue of no significant hazards consideration, which is presented below:

1. Does the proposed amendment involve a significant increase in the probability or consequences of an accident previously evaluated?

Response: No.

The proposed change modifies the Technical Specifications (TS) by adopting containment inerting and de-inerting requirements that are consistent with the guidance of NUREG–1433, ''Standard Technical Specifications—General Electric BWR/4 Plants, Volume 1, Revision 4.0,'' published April 2012. The proposed change will allow inerting of the primary containment within 24 hours of exceeding 15 percent (%) Rated Thermal Power (RTP), and de-inerting 24 hours prior to reducing reactor power to less than or equal to 15% RTP. Also, a new TS condition will be added to identify required actions if the primary containment oxygen concentration increases to greater than or equal to 4% by volume while in the power operating condition. The proposed change does not alter the physical configuration of the plant, nor does it affect any previously analyzed accident initiators. The accident analysis assumes that a Loss of Coolant Accident (LOCA) occurs at 100% RTP. The consequences of a LOCA at less than or equal to 15% RTP would be much less severe, and produce less hydrogen than a LOCA at 100% RTP.

Therefore, the proposed change does not involve a significant increase in the probability or consequences of an accident previously evaluated.

2. Does the proposed amendment create the possibility of a new or different kind of accident from any accident previously evaluated?

Response: No.

The proposed change adopts the STS [Standard Technical Specifications] guidance regarding containment inerting/de-inerting requirements. The proposed change introduces no new mode of plant operation and does not involve any physical modification to the plant. The proposed change is consistent with the current safety analysis assumptions. No setpoints are being changed which would alter the dynamic response of plant equipment. Accordingly, no new failure modes are introduced.

Therefore, the proposed change does not create the possibility of a new or different kind of accident from any previously evaluated.

3. Does the proposed amendment involve a significant reduction in a margin of safety?

Response: No.

The proposed change revises the Applicability presentation of the Oxygen Concentration TS. No safety limits are affected. The Oxygen Concentration TS requirements assure sufficient safety margins are maintained, and that the design, operation, surveillance methods, and acceptance criteria specified in applicable codes and standards (or alternatives approved for use by the NRC) will continue to be met as described in the plants' licensing basis. The proposed change does not adversely affect existing plant safety margins or the reliability of the equipment assumed to operate in the safety analysis. As such, there are no changes being made to safety analysis assumptions, safety limits, or limiting safety system settings that would adversely affect plant safety.

Therefore, the proposed change does not result in a significant reduction in a margin of safety.

The NRC staff has reviewed the licensee's analysis and, based on this review, it appears that the three standards of 10 CFR 50.92(c) are satisfied. Therefore, the NRC staff proposes to determine that the amendment request involves no significant hazards consideration.

Attorney for licensee: Tamra Domeyer, Associate General Counsel, Exelon Generation Company, LLC, 4300 Winfield Road, Warrenville, IL 60555.

NRC Branch Chief: James G. Danna.

Southern Nuclear Operating Company, Docket Nos. 52–025 and 52–026, Vogtle Electric Generating Plant (VEGP), Units 3 and 4, Burke County, Georgia

Date of amendment request: April 26, 2019. A publicly available version is in ADAMS under Accession No. ML19119A249.

Description of amendment request: The amendment request proposes changes to the Combined License (COL) Numbers NPF–91 and NPF–92 for VEGP, Units 3 and 4, and Updated Final Safety Analysis Report (UFSAR) in the form of departures from the incorporated plant-specific Design Control Document Tier 2 * and Tier 2 information related to the design-specific pre-operational Automatic Depressurization System (ADS) Blowdown Test. The requested amendment involves changes to credit the previously completed ADS Blowdown first three plant tests as described in the licensing basis documents, including COL Condition 2.D.(2)(a). Specifically, the proposed change would revise the COL, License Condition 2.D.(2)(a)2, by removing the requirement to perform the ADS Slowdown first three plant test during preoperational testing.

Basis for proposed no significant hazards consideration determination:

As required by 10 CFR 50.91(a), the licensee has provided its analysis of the issue of no significant hazards consideration, which is presented below with changes made by the Nuclear Regulatory Commission shown in square brackets:

1. Does the proposed amendment involve a significant increase in the probability or consequences of an accident previously evaluated?

Response: No.

The proposed change does not affect the operation of any systems or equipment that initiates an analyzed accident or alter any structures, systems, or components (SSC) accident initiator or initiating sequence of events. The proposed changes remove the requirement to perform the ADS Blowdown first three plant test based on the successful completion of the tests at the lead AP1000 units. The change does not adversely affect any methodology which would increase the probability or consequences of a previously evaluated accident.

The change does not impact the support, design, or operation of mechanical or fluid systems. There is no change to plant systems or the response of systems to postulated accident conditions. There is no change to predicted radioactive releases due to normal operation or postulated accident conditions. The plant response to previously evaluated accidents or external events is not adversely affected, nor does the proposed change create any new accident precursors.

Therefore, the proposed amendment does not involve a significant increase in the probability or consequences of a previously evaluated accident.

2. Does the proposed amendment create the possibility of a new or different kind of accident from any accident previously evaluated?

Response: No.

The proposed change does not affect the operation of any systems or equipment that may initiate a new or different kind of accident, or alter any SSC such that a new accident initiator or initiating sequence of events is created.

The proposed change credits previously completed ADS Blowdown first three plant testing based on the successful completion of the tests at the lead AP1000 units. The proposed changes do not adversely affect any design function of any SSC design functions or methods of operation in a manner that results in a new failure mode, malfunction, or sequence of events that affect safety-related or non-safety-related equipment. This activity does not allow for a new fission product release path, result in a new fission product barrier failure mode, or create a new sequence of events that result in significant fuel cladding failures.

Therefore, the proposed amendment does not create the possibility of a new or different kind of accident from any accident previously evaluated.

3. Does the proposed amendment involve a significant reduction in a margin of safety?

Response: No.

The proposed change maintains existing safety margin and provides adequate protection through continued application of the existing requirement in the UFSAR. The proposed change satisfies the same design functions in accordance with the same codes and standards as stated in the UFSAR. This change does not adversely affect any design code, function, design analysis, safety analysis input or result, or design/safety margin. No safety analysis or design basis acceptance limit/criterion is challenged or exceeded by the proposed change.

Since no safety analysis or design basis acceptance limit/criterion is challenged or exceeded by this change, no significant margin of safety is reduced.

Therefore, the proposed change does not involve a significant reduction in a margin of safety.

The NRC staff has reviewed the licensee's analysis and, based on this review, it appears that the three standards of 10 CFR 50.92(c) are satisfied. Therefore, the NRC staff proposes to determine that the amendment request involves no significant hazards consideration.

Attorney for licensee: M. Stanford Blanton, Balch & Bingham LLP, 1710 Sixth Avenue North, Birmingham, AL 35203–2015.

NRC Branch Chief: Jennifer Dixon-Herrity.

STP Nuclear Operating Company, Docket Nos. 50–498 and 50–499, South Texas Project, Units 1 and 2, Matagorda County, Texas

Date of amendment request: May 1, 2019. A publicly available version is in ADAMS under Accession No. ML19126A309.

Description of amendment request: The amendments would revise the South Texas Project, Units 1 and 2, Technical Specifications in Section 3.0 and Section 4.0 regarding limiting condition for operation (LCO) and surveillance requirement (SR) usage. The proposed changes are consistent with the NRC-approved Technical Specifications Task Force (TSTF) Traveler TSTF–529, ''Clarify Use and Application Rules,'' using the consolidated line item improvement process (ADAMS Accession No. ML16062A271). The model safety evaluation was approved by the NRC in a letter dated April 21, 2016 (ADAMS Accession No. ML16060A441).

Basis for proposed no significant hazards consideration determination: As required by 10 CFR 50.91(a), the licensee has provided its analysis of the issue of no significant hazards consideration, which is presented below:

1. Does the proposed change involve a significant increase in the probability or consequences of an accident previously evaluated?

Response: No.

The proposed change to Technical Specification LCO 3.0.4 has no effect on the requirement for systems to be Operable and has no effect on the application of Technical Specification actions. The proposed change to Technical Specification SR 4.0.3 states that the allowance may only be used when there is a reasonable expectation the surveillance will be met when performed. Since the proposed change does not significantly affect system Operability, the proposed change will have no significant effect on the initiating events for accidents previously evaluated and will have no significant effect on the ability of the systems to mitigate accidents previously evaluated.

Therefore, it is concluded that this change does not involve a significant increase in the probability or consequences of an accident previously evaluated.

2. Does the proposed change create the possibility of a new or different kind of accident from any accident previously evaluated?

Response: No.

The proposed change to the Technical Specifications usage rules does not affect the design or function of any plant systems. The proposed change does not change the Operability requirements for plant systems or the actions taken when plant systems are not Operable.

Therefore, it is concluded that this change does not create the possibility of a new or different kind of accident from any accident previously evaluated.

3. Does the proposed change involve a significant reduction in a margin of safety?

Response: No.

The proposed change clarifies the application of Technical Specification LCO 3.0.4 and does not result in changes in plant operation. Technical Specification SR 4.0.3 is revised to allow application of Technical Specification SR 4.0.3 when a Surveillance Requirement has not been previously performed if there is reasonable expectation that the Surveillance Requirement will be met when performed. This expands the use of Technical Specification SR 4.0.3 while ensuring the affected system is capable of performing its safety function. As a result, plant safety is either improved or unaffected.

Therefore, it is concluded that this change does not involve a significant reduction in a margin of safety.

The NRC staff has reviewed the licensee's analysis and, based on this review, it appears that the three standards of 10 CFR 50.92(c) are satisfied. Therefore, the NRC staff proposes to determine that the request for amendments involves no significant hazards consideration.

Attorney for licensee: Kym Harshaw, Vice President and General Counsel, STP Nuclear Operating Company, P.O. Box 289, Wadsworth, TX 77483.

NRC Branch Chief: Robert J. Pascarelli.

Tennessee Valley Authority (TVA), Docket Nos. 50–390 and 50–391, Watts Bar Nuclear Plant (WBN), Units 1 and 2, Rhea County, Tennessee

Date of amendment request: November 26, 2018, as supplemented by letter dated May 13, 2019. Publicly-available versions are in ADAMS under Accession Nos. ML18331A134 and ML19134A233, respectively.

Description of amendment request: The amendments would revise technical specifications (TSs) to support performance of 6.9 kiloVolt and associated 480 Volt shutdown board (SDBD) maintenance. The proposed changes provide operational flexibility for two-unit operation by providing sufficient time to perform preventive maintenance on SDBDs associated with a defueled unit while the opposite unit is operating in Modes 1, 2, 3, or 4.

Basis for proposed no significant hazards consideration determination: As required by 10 CFR 50.91(a), the licensee has provided its analysis of the issue of no significant hazards consideration, which is presented below:

1. Does the proposed change involve a significant increase in the probability or consequences of any accident previously evaluated?

Response: No.

The proposed change modifies the required actions for the opposite unit's onsite and offsite AC power sources and electrical distribution system. The opposite unit's AC power sources and electrical distribution system are required to be operable to support the associated unit's required features. In addition, a change is proposed to remove the details regarding the required input power to the vital inverters. This change will not affect the probability of an accident, since the AC power sources, vital inverters, and electrical distribution system are not initiators of any accident sequence analyzed in the WBN dual-unit Updated Final Safety Analysis Report (UFSAR). Rather, the AC power sources, vital inverters, and electrical distribution system support equipment used to mitigate accidents. The consequences of an analyzed accident will not be significantly increased since the minimum requirements for AC power sources, vital inverters, and electrical distribution system will be maintained to ensure the availability of the required power to mitigate accidents assumed in the UFSAR. Operation in accordance with the proposed TS will ensure that sufficient AC power sources, vital inverters, and electrical distribution subsystems are operable, as required to support the unit's required features. Therefore, the mitigating functions supported by the AC power sources, vital inverters, and electrical distribution system will continue to provide the protection assumed by the accident analysis. The integrity of fission product barriers, plant configuration, and operating procedures as described in the UFSAR will not be affected by the proposed changes. Thus, the consequences of previously analyzed accidents will not increase by implementing these changes. Therefore, the proposed changes do not involve a significant increase in the probability or consequences of an accident previously evaluated.

2. Does the proposed change create the possibility of a new or different kind of accident from any previously evaluated?

Response: No

The proposed changes involve restructuring the TS for the AC electrical power system to provide more flexibility in performing maintenance on electrical system components. The AC electrical power system is not an initiator to any accident sequence analyzed in the UFSAR. Rather, the AC electrical power system supports equipment used to mitigate accidents. The proposed changes to modify the required actions associated with inoperable opposite unit AC power sources and shutdown boards and proposed changes to the details of the required power supplies to the vital inverters will maintain the same level of equipment performance required for mitigating accidents assumed in the UFSAR. Therefore, operation of the facility in accordance with this proposed change will not create the possibility of a new or different kind of accident from any accident previously evaluated.

3. Does the proposed change involve a significant reduction in the margin of safety?

Response: No.

The margin of safety is established through equipment design, operating parameters, and the setpoints at which automatic actions are initiated. The equipment margins will be maintained in accordance with the plant-specific design bases as a result of the proposed changes. The proposed changes will not adversely affect operation of plant equipment. These changes will not result in a change to the setpoints at which protective actions are initiated. Sufficient AC capability to support operation of mitigation equipment is ensured. The equipment fed by the AC electrical sources will continue to provide adequate power to safety-related loads in accordance with analysis assumptions. The proposed TS changes maintain the same level of equipment performance stated in the UFSAR and the current TSs. Therefore, the proposed changes do not involve a significant reduction of safety.

The NRC staff has reviewed the licensee's analysis and, based on this review, it appears that the three standards of 10 CFR 50.92(c) are satisfied. Therefore, the NRC staff proposes to determine that the amendment request involves no significant hazards consideration.

Attorney for licensee: General Counsel, Tennessee Valley Authority, 400 West Summit Hill Drive, 6A West Tower, Knoxville, TN 37902.

NRC Branch Chief: Undine Shoop.

Tennessee Valley Authority, Docket Nos. 50–390 and 50–391, Watts Bar Nuclear Plant, Units 1 and 2, Rhea County, Tennessee

Date of amendment request: November 29, 2018. A publicly-available version is in ADAMS under Accession No. ML18334A389.

Description of amendment request: The amendments would modify the Watts Bar Nuclear Plant, Units 1 and 2, Technical Specification requirements related to direct current (DC) electrical systems to be consistent with Technical Specifications Task Force (TSTF) Traveler TSTF–500, Revision 2, ''DC Electrical Rewrite—Update to TSTF–360'' (ADAMS Accession No. ML092670242).

Basis for proposed no significant hazards consideration determination: As required by 10 CFR 50.91(a), the licensee has provided its analysis of the issue of no significant hazards consideration, which is presented below:

1. Does the proposed change involve a significant increase in the probability or consequences of any accident previously evaluated?

Response: No.

The proposed changes restructure the Technical Specifications (TS) for the direct current (DC) electrical power system and are consistent with TSTF–500, Revision 2. The proposed changes modify TS Actions relating to battery and battery charger inoperability. The DC electrical power system, including associated battery chargers, is not an initiator of any accident sequence analyzed in the Final Safety Analysis Report (FSAR). Rather, the DC electrical power system supports equipment used to mitigate accidents. The proposed changes to restructure TS and change surveillances for batteries and chargers to incorporate the updates included in TSTF–500, Revision 2, will maintain the same level of equipment performance required for mitigating accidents assumed in the FSAR. Operation in accordance with the proposed TS would ensure that the DC electrical power system is capable of performing its specified safety function as described in the FSAR. Therefore, the mitigating functions supported by the DC electrical power system will continue to provide the protection assumed by the analysis. The relocation of preventive maintenance surveillances, and certain operating limits and actions, to a licensee-controlled Battery Monitoring and Maintenance Program will not challenge the ability of the DC electrical power system to perform its design function. Appropriate monitoring and maintenance that are consistent with industry standards will continue to be performed. In addition, the DC electrical power system is within the scope of 10 CFR 50.65, ''Requirements for monitoring the effectiveness of maintenance at nuclear power plants,'' which will ensure the control of maintenance activities

associated with the DC electrical power system.

The integrity of fission product barriers, plant configuration, and operating procedures as described in the FSAR will not be affected by the proposed changes. Therefore, the consequences of previously analyzed accidents will not increase by implementing these changes. Therefore, the proposed changes do not involve a significant increase in the probability or consequences of an accident previously evaluated.

2. Does the proposed change create the possibility of a new or different kind of accident from any previously evaluated?

Response: No.

The proposed changes involve restructuring the TS for the DC electrical power system. The DC electrical power system, including associated battery chargers, is not an initiator to any accident sequence analyzed in the FSAR. Rather, the DC electrical power system supports equipment used to mitigate accidents. The proposed changes to restructure the TS and change surveillances for batteries and chargers to incorporate the updates included in TSTF–500, Revision 2, will maintain the same level of equipment performance required for mitigating accidents assumed in the FSAR. Administrative and mechanical controls are in place to ensure the design and operation of the DC systems continues to meet the plant design basis described in the FSAR. Therefore, operation of the facility in accordance with this proposed change will not create the possibility of a new or different kind of accident from any accident previously evaluated.

3. Does the proposed change involve a significant reduction in the margin of safety?

Response: No.

The margin of safety is established through equipment design, operating parameters, and the setpoints at which automatic actions are initiated. The equipment margins will be maintained in accordance with the plant-specific design bases because of the proposed changes. The proposed changes will not adversely affect operation of plant equipment. These changes will not result in a change to the setpoints at which protective actions are initiated. Sufficient DC capacity to support operation of mitigation equipment is ensured. The changes associated with the new battery Maintenance and Monitoring Program will ensure that the station batteries are maintained in a highly reliable manner. The equipment fed by the DC electrical sources will continue to provide adequate power to safety-related loads in accordance with analysis assumptions. TS changes made in accordance with TSTF–500, Revision 2, maintain the same level of equipment performance stated in the FSAR and the current TSs. Therefore, the proposed changes do not involve a significant reduction [in the margin] of safety.

The NRC staff has reviewed the licensee's analysis and, based on this review, it appears that the three standards of 10 CFR 50.92(c) are satisfied. Therefore, the NRC staff proposes to determine that the amendment request involves no significant hazards consideration.

Attorney for licensee: General Counsel, Tennessee Valley Authority, 400 West Summit Hill Drive, 6A West Tower, Knoxville, TN 37902.

NRC Branch Chief: Undine Shoop.

Virginia Electric and Power Company, Docket Nos. 50–338 and 50–339, North Anna Power Station, Units No. 1 and No. 2, Louisa County, Virginia

Date of amendment request: March 18, 2019. A publicly available version is in ADAMS under Accession No. ML19086A113.

Description of amendment request: The amendments would revise Renewed Facility Operating License Nos. NPF–4 and NPF–7 for the North Anna Power Station, Units 1 and 2, respectively, by revising the Technical Specification (TS) requirements regarding the Emergency Diesel Generators. Specifically, TS 3.8.1, ''AC Sources—Operating,'' would be revised to reduce the maximum voltage specified in the associated surveillance requirements.

Basis for proposed no significant hazards consideration determination: As required by 10 CFR 50.91(a), the licensee has provided its analysis of the issue of no significant hazards consideration, which is presented below:

1. Does the proposed change involve a significant increase in the probability or consequences of an accident previously evaluated?

Response: No.

Modifying the maximum steady-state voltage requirement does not increase the probability of an accident. Verifying proper operation of the EDGs to maintain adequate voltage ensures proper electrical and mechanical system function and does not increase the consequences of an accident.

2. Does the proposed change create the possibility of a new or different kind of accident from any accident previously evaluated?

Response: No.

The proposed change would provide more restrictive acceptance criteria to be applied to existing technical specification surveillance tests that demonstrate the capability of the facility EDGs to perform their design function. The proposed acceptance criteria changes would not create any new failure mechanisms, malfunctions, or accident initiators not considered in the design and licensing bases. Therefore, the possibility of a new or different kind of accident from any previously evaluated has not been created.

3. Does the proposed change involve a significant reduction in a margin of safety?

Response: No.

The proposed change involves decreasing maximum voltage test acceptance criterion for EDG Surveillance Tests. The conduct of surveillance tests on safety-related plant equipment is a means of assuring that the equipment is capable of maintaining the margin of safety established in the safety analyses for the facility. The proposed amendment does not affect EDG performance as described in the design basis analyses, including the capability of the EDG to maintain required voltage for proper operation of plant safety loads. The proposed amendment does not introduce changes to limits established in the accident analyses. Therefore, the proposed amendment does not involve a significant reduction in a margin of safety.

The NRC staff has reviewed the licensee's analysis and, based on this review, it appears that the three standards of 10 CFR 50.92(c) are satisfied. Therefore, the NRC staff proposes to determine that the amendment request involves no significant hazards consideration.

Attorney for licensee: Mr. W.S. Blair, Senior Counsel, Dominion Energy Services, Inc., 120 Tredegar Street, RS–2, Richmond, VA 23219.

NRC Branch Chief: Michael T. Markley.

IV. Notice of Issuance of Amendments to Facility Operating Licenses and Combined Licenses

During the period since publication of the last biweekly notice, the Commission has issued the following amendments. The Commission has determined for each of these amendments that the application complies with the standards and requirements of the Atomic Energy Act of 1954, as amended (the Act), and the Commission's rules and regulations. The Commission has made appropriate findings as required by the Act and the Commission's rules and regulations in 10 CFR chapter I, which are set forth in the license amendment.

A notice of consideration of issuance of amendment to facility operating license or combined license, as applicable, proposed no significant hazards consideration determination, and opportunity for a hearing in connection with these actions, was published in the **Federal Register** as indicated.

Unless otherwise indicated, the Commission has determined that these amendments satisfy the criteria for categorical exclusion in accordance with 10 CFR 51.22. Therefore, pursuant to 10 CFR 51.22(b), no environmental impact statement or environmental assessment need be prepared for these amendments. If the Commission has prepared an environmental assessment under the special circumstances provision in 10 CFR 51.22(b) and has made a determination based on that assessment, it is so indicated.

For further details with respect to the action see (1) the applications for amendment, (2) the amendment, and (3) the Commission's related letter, Safety Evaluation and/or Environmental Assessment as indicated. All of these items can be accessed as described in the ''Obtaining Information and Submitting Comments'' section of this document.

Arizona Public Service Company, et al., Docket Nos. STN 50–528, STN 50–529, and STN 50–530, Palo Verde Nuclear Generating Station, Unit Nos. 1, 2, and 3, Maricopa County, Arizona

Date of application for amendments: July 31, 2015, as supplemented by letters dated April 11, 2016; November 3, 2017; and May 18, June 1, September 21, and October 5, 2018.

Brief description of amendments: The amendments revised certain technical specification (TS) requirements related to Completion Times for Required Actions to provide the option to calculate a longer, risk-informed completion time. The allowance is described in a new program, ''Risk Informed Completion Time Program,'' that was added to TS Section 5.0, ''Administrative Controls.'' The methodology for using the Risk-Informed Completion Time Program is described in Nuclear Energy Institute (NEI) Report NEI 06–09, ''Risk-Informed Technical Specifications Initiative 4b: Risk-Managed Technical Specifications (RMTS) Guidelines,'' Revision 0–A.

Date of issuance: May 29, 2019.

Effective date: As of the date of issuance and shall be implemented within 270 days from the date of issuance.

Amendment Nos.: Unit 1—209; Unit 2—209; Unit 3—209. A publicly-available version is in ADAMS under Accession No. ML19085A525. Documents related to these amendments are listed in the Safety Evaluation enclosed with the amendments.

Renewed Facility Operating License Nos. NPF–41, NPF–51, and NPF–74: The amendments revised the Renewed Facility Operating Licenses and Technical Specifications.

*Date of initial notice in **Federal Register**:* December 8, 2015 (80 FR 76317). By letter dated November 3, 2017, the licensee supplemented its application. By supplemental letters dated May 18 and June 1, 2018, the licensee provided additional information that expanded the scope of the amendment request as originally noticed in the **Federal Register**. Accordingly, the NRC published a second proposed no significant hazards consideration determination in the **Federal Register** on August 14, 2018 (83 FR 40345), which superseded the original notice in its entirely. The supplemental letters dated September 21, and October 5, 2018, provided additional information that clarified the application, did not expand the scope of the application as noticed, and did not change the staff's second proposed no significant hazards consideration determination as published in the **Federal Register**.

The Commission's related evaluation of the amendments is contained in a Safety Evaluation dated May 29, 2019.

Dairyland Power Cooperative, Docket No.: 50–409, La Crosse Boiling Water Reactor, La Crosse County, Wisconsin

Date of application for amendment: June 27, 2016, supplemented by letter dated December 1, 2016, May 31, 2018, and November 15, 2018.

Brief description of amendment: The amendment revises the La Crosse Boiling Water Reactor (LACBWR) license to approve the License Termination Plan (LTP). The LACBWR LTP provides the details of the plan for characterizing, identifying, and remediating the remaining residual radioactivity at the LACBWR site to a level that will allow the site to be released for unrestricted use. The LACBWR LTP also describes how the licensee will confirm the extent and success of remediation through radiological surveys, provide financial assurance to complete decommissioning, and ensure the environmental impacts of the decommissioning activities are within the scope originally envisioned in the associated environmental documents. Decommissioning activities at the LACBWR site are scheduled to be complete in 2019, with license termination occurring before the end of 2020.

Date of issuance: May 21, 2019.

Effective date: As of the date of issuance and shall be implemented within 60 days.

Amendment No.: 75.

Possession Only License No. DPR–45: The amendment revised the Possession Only License.

*Date of initial notice in **Federal Register**:* August 30, 2016 (81 FR 59663). The supplements dated December 1, 2016, May 31, 2018, and November 15, 2018, provided additional information that clarified the application, did not expand the scope of the application as originally noticed, and did not affect the applicability of the NRC's generic no significant hazards consideration determination.

The Commission's related evaluation of the amendment is contained in a safety evaluation dated May 21, 2019, which is available in the Agencywide Documents Access and Management System (ADAMS) at Accession No. ML19008A079).

No significant hazards consideration comments received: Not applicable.

Dominion Energy Nuclear Connecticut, Inc., Docket No. 50–423, Millstone Power Station, Unit No. 3, New London County, Connecticut

Date of amendment request: May 3, 2018, as supplemented by letters dated November 29, 2018; March 27, 2019; and May 7, 2019.

Brief description of amendment: The amendment revised the Technical Specifications to reflect the results and constraints of a new criticality safety analysis for fuel assembly storage in the Millstone Power Station, Unit No. 3, fuel storage racks. Specifically, the amendment implemented the following items associated with fuel assembly storage: (1) Increased the Technical Specification minimum spent fuel pool soluble boron concentration, (2) revised allowed storage patterns and initial enrichment/burnup/decay time for fuel assemblies in the spent fuel pool to meet k_{eff} requirements under normal and accident conditions, (3) permitted the storage of any fuel assembly with certain enrichment that contains a rod cluster control assembly in Region 2 without restriction, and (4) implemented a revised criticality analysis for the new fuel storage racks using the updated methods for the spent fuel pool criticality analysis for consistency.

Date of issuance: May 28, 2019.

Effective date: As of the date of issuance and shall be implemented within 90 days of issuance.

Amendment No.: 273. A publicly available version is in ADAMS under Accession No. ML19126A000; documents related to this amendment are listed in the Safety Evaluation enclosed with the amendment.

Renewed Facility Operating License No. NPF–49: The amendment revised the Renewed Facility Operating License and Technical Specifications.

*Date of initial notice in **Federal Register**:* August 7, 2018 (83 FR 38735). The supplemental letters dated November 29, 2018; March 27, 2019; and May 7, 2019, provided additional information that clarified the application, did not expand the scope of the application as originally noticed, and did not change the NRC staff's original proposed no significant hazards

consideration determination as published in the **Federal Register**.

The Commission's related evaluation of the amendment is contained in a Safety Evaluation dated May 28, 2019.

No significant hazards consideration comments received: No.

Entergy Operations, Inc., Docket No. 50–313, Arkansas Nuclear One, Unit 1 (ANO–1), Pope County, Arkansas

Date of amendment request: March 12, 2018, as supplemented by letters dated April 26, October 17, and December 11, 2018.

Brief description of amendment: The amendment revised the ANO–1 Technical Specifications and operating license by relocating certain surveillance frequencies to a licensee-controlled program, consistent with the NRC-approved Technical Specifications Task Force (TSTF) Improved Standard Technical Specifications Change Traveler TSTF–425, Revision 3, ''Relocate Surveillance Frequencies to Licensee Control—RITSTF [Risk-Informed TSTF] Initiative 5b.''

Date of issuance: May 22, 2019.

Effective date: As of the date of issuance.

Amendment No.: 264. A publicly available version is in ADAMS under Accession No. ML19098A955; documents related to this amendment are listed in the Safety Evaluation enclosed with the amendment.

Renewed Facility Operating License No. DPR–51: Amendment revised the Renewed Facility Operating License and Technical Specifications.

*Date of initial notice in **Federal Register**:* June 5, 2018 (83 FR 26102). The supplemental letters dated October 17 and December 11, 2018, provided additional information that clarified the application, did not expand the scope of the application as originally noticed, and did not change the NRC staff's original proposed no significant hazards consideration determination as published in the **Federal Register**.

The Commission's related evaluation of the amendment is contained in a Safety Evaluation dated May 22, 2019.

No significant hazards consideration comments received: No.

Entergy Operations, Inc., System Energy Resources, Inc., Cooperative Energy, A Mississippi Electric Cooperative, and Entergy Mississippi, LLC, Docket No. 50–416, Grand Gulf Nuclear Station, Unit 1, Claiborne County, Mississippi

Date of amendment request: April 10, 2018, as supplemented by letters dated October 23, 2018, and March 13, 2019.

Brief description of amendment: The amendment revised the Technical Specifications (TSs) to adopt Technical Specifications Task Force (TSTF) Traveler TSTF–542, Revision 2, ''Reactor Pressure Vessel Water Inventory Control.'' The change replaced existing TS requirements related to ''operations with a potential for draining the reactor vessel'' with new requirements on reactor pressure vessel water inventory control to protect Safety Limit 2.1.1.3. Safety Limit 2.1.1.3 requires reactor vessel water level to be greater than the top of active irradiated fuel.

Date of issuance: May 23, 2019.

Effective date: As of the date of issuance and shall be implemented within 120 days from the date of issuance.

Amendment No: 218. A publicly available version is in ADAMS under Accession No. ML19084A218; documents related to this amendment are listed in the Safety Evaluation enclosed with the amendment.

Renewed Facility Operating License No. NPF–29: The amendment revised the Renewed Facility Operating License and Technical Specifications.

*Date of initial notice in **Federal Register**:* June 5, 2018 (83 FR 26103). The supplemental letters dated October 23, 2018, and March 13, 2019, provided additional information that clarified the application, did not expand the scope of the application as originally noticed, and did not change the NRC staff's original proposed no significant hazards consideration determination as published in the **Federal Register**.

The Commission's related evaluation of the amendment is contained in a Safety Evaluation dated May 23, 2019.

No significant hazards consideration comments received: No.

Exelon Generation Company, LLC, Docket Nos. 50–352 and 50–353, Limerick Generating Station, Units 1 and 2, Montgomery County, Pennsylvania

Exelon Generation Company, LLC, and PSEG Nuclear LLC, Docket Nos. 50–171, 50–277, and 50–278, Peach Bottom Atomic Power Station, Units 1, 2, and 3, York and Lancaster Counties, Pennsylvania

Date of amendment request: May 10, 2018, as supplemented by letters dated November 1 and November 29, 2018.

Brief description of amendments: The amendments revised the emergency response organization positions identified in the emergency plan for each site.

Date of issuance: May 24, 2019.

Effective date: As of the date of issuance and shall be implemented on or before December 31, 2019.

Amendment Nos.: Limerick—235/198 and Peach Bottom—14/325/328. A publicly-available version is in ADAMS under Accession No. ML19078A018. Documents related to these amendments are listed in the Safety Evaluation enclosed with the amendments.

Facility Operating License Nos. NPF–39, NPF–85, DPR–12, DPR–44, and DPR–56: Amendments revised the emergency plans.

*Date of initial notice in **Federal Register**:* July 17, 2018 (83 FR 33268). The supplemental letters dated November 1 and November 29, 2018, provided additional information that clarified the application, did not expand the scope of the application as originally noticed, and did not change the NRC staff's original proposed no significant hazards consideration determination as published in the **Federal Register**.

The Commission's related evaluation of the amendments is contained in a safety evaluation dated May 24, 2019.

No significant hazards consideration comments received: No.

PSEG Nuclear LLC and Exelon Generation Company, LLC, Docket Nos. 50–272 and 50–311, Salem Nuclear Generating Station, Unit Nos. 1 and 2, Salem County, New Jersey

Date of amendment request: June 29, 2018, as supplemented by letter dated October 27, 2018.

Brief description of amendments: The amendments revised Technical Specification (TS) 3/4.3.1, ''Reactor Trip System Instrumentation''; TS 3/4.3.2, ''Engineered Safety Feature Actuation System Instrumentation''; TS 3/4.7.1.5, ''Main Steam Isolation Valves''; and added a new TS for feedwater isolation to better align the TSs with the design-basis analyses and the design of the instrumentation.

Date of issuance: May 31, 2019.

Effective date: As of the date of issuance and shall be implemented within 60 days from the date of issuance.

Amendment Nos.: 329 (Unit No. 1) and 310 (Unit No. 2). A publicly available version is in ADAMS under Accession No. ML19105B171; documents related to these amendments are listed in the Safety Evaluation enclosed with the amendments.

Renewed Facility Operating License Nos. DPR–70 and DPR–75: The amendments revised the Renewed Facility Operating Licenses and Technical Specifications.

*Date of initial notice in **Federal Register**:* August 28, 2018 (83 FR 43907). The supplemental letter dated October 27, 2018, provided additional information that clarified the

application, did not expand the scope of the application as originally noticed, and did not change the NRC staff's original proposed no significant hazards consideration determination as published in the **Federal Register**.

The Commission's related evaluation of the amendments is contained in a Safety Evaluation dated May 31, 2019.

No significant hazards consideration comments received: No.

Tennessee Valley Authority, Docket Nos. 50–390 and 50–391, Watts Bar Nuclear Plant, Units 1 and 2, Rhea County, Tennessee

Date of amendment request: December 20, 2017, as supplemented by letters dated February 15, April 9, and October 4, 2018.

Brief description of amendments: The amendments revised Technical Specification (TS) 4.2.1, ''Fuel Assemblies,'' for Unit 2 to allow up to 1,792 tritium producing burnable absorber rods in the reactor; and revised the Units 1 and 2 TSs related to fuel storage.

Date of issuance: May 22, 2019.

Effective date: As of the date of issuance and shall be implemented prior to startup from the outage where any number of tritium producing burnable absorber rods is inserted in the Watts Bar Nuclear Plant, Unit 2, reactor core not to exceed December 31, 2022.

Amendment Nos.: 125 (Unit 1) and 27 (Unit 2). A publicly available version is in ADAMS under Accession No. ML18347B330; documents related to these amendments are listed in the Safety Evaluation enclosed with the amendments.

Facility Operating License Nos. NPF–90 and NPF–96: The amendments revised the Facility Operating Licenses and TSs.

*Date of initial notice in **Federal Register**:* June 8, 2018 (83 FR 26709). The supplement dated October 4, 2018, provided additional information that clarified the application, and did not expand the scope of the application as originally noticed in the **Federal Register**.

The Commission's related evaluation of the amendment is contained in a Safety Evaluation dated May 22, 2019.

Wolf Creek Nuclear Operating Corporation, Docket No. 50–482, Wolf Creek Generating Station, Unit 1 (Wolf Creek), Coffey County, Kansas

Date of amendment request: January 17, 2017, as supplemented by letters dated March 22, May 4, July 13, October 18, and November 14, 2017; January 15, January 29, April 19, June 19, August 9, November 15 (two letters), and December 6, 2018; and March 5, May 2, and May 15, 2019.

Brief description of amendment: The amendment revised the Wolf Creek Technical Specifications to replace the existing methodology for performing core design, non-loss-of-coolant-accident and loss-of-coolant accident safety analyses with standard Westinghouse Electric Corporation developed and NRC-approved analysis methodologies. In addition, the amendment revised the Wolf Creek licensing basis by adopting the alternative source term (AST) radiological analysis methodology in accordance with 10 CFR 50.67, ''Accident source term.'' This amendment represented a full scope implementation of the AST as described in Regulatory Guide 1.183, ''Alternative Radiological Source Terms for Evaluating Design Basis Accidents at Nuclear Power Reactors.''

Date of issuance: May 31, 2019.

Effective date: As of the date of issuance and shall be implemented during startup (prior to entry into Mode 2) from Refueling Outage 23.

Amendment No.: 221. A publicly available version is in ADAMS under Accession No. ML19100A122; documents related to this amendment are listed in the Safety Evaluation enclosed with the amendment.

Renewed Facility Operating License No. NPF–42. The amendment revised the Renewed Facility Operating License and Technical Specifications.

*Date of initial notice in **Federal Register**:* On July 5, 2017, the NRC staff published a proposed no significant hazards consideration (NSHC) determination in the **Federal Register** (82 FR 31084) for the proposed amendment. Subsequently by letters dated July 13, October 18, and November 14, 2017; January 15, January 29, April 19, June 19, and August 9, 2018, the licensee provided additional information that expanded the scope of the amendment request as originally noticed in the **Federal Register**. Accordingly, the NRC published a second proposed NSHC determination in the **Federal Register** on October 2, 2018 (83 FR 49590), which superseded the original notice in its entirety. The supplemental letters dated November 15 (two letters) and December 6, 2018; and March 5, May 2, and May 15, 2019, provided additional information that clarified the application, did not expand the scope of the application as noticed on October 2, 2018, and did not change the NRC staff's proposed NSHC determination published in the **Federal Register** dated October 2, 2018.

The Commission's related evaluation of the amendment is contained in a Safety Evaluation dated May 31, 2019.

No significant hazards consideration comments received: No.

Dated at Rockville, Maryland, this 10th day of June 2019.

For the Nuclear Regulatory Commission.

Craig G. Erlanger,

Director, Division of Operating Reactor Licensing, Office of Nuclear Reactor Regulation.

[FR Doc. 2019–12573 Filed 6–17–19; 8:45 am]

BILLING CODE 7590–01–P

NUCLEAR REGULATORY COMMISSION

[Docket No. 50–219; NRC–2019–0096]

Exelon Generation Company LLC; Oyster Creek Nuclear Generating Station

AGENCY: Nuclear Regulatory Commission.

ACTION: Exemption; issuance.

SUMMARY: The U.S. Nuclear Regulatory Commission (NRC) has reissued exemptions originally approved on October 16, 2018, exempting Exelon Generation Company, LLC (Exelon or the licensee) from certain emergency planning (EP) requirements. The NRC is reissuing these exemptions to change the effective date of the exemptions from date would change from 365 days to 285 days after the permanent cessation of power operations. The reissued exemptions eliminated the requirements to maintain an offsite radiological emergency preparedness plan and reduce the scope of onsite EP activities at the Oyster Creek Nuclear Generating Station (Oyster Creek), based on the reduced risks of accidents that could result in an offsite radiological release at a decommissioning nuclear power reactor.

DATES: The exemptions were reissued on June 11, 2019.

ADDRESSES: Please refer to Docket ID NRC–2019–0096 when contacting the NRC about the availability of information regarding this document. You may obtain publicly-available information related to this document using any of the following methods:

- *Federal Rulemaking Website:* Go to *http://www.regulations.gov* and search for Docket ID NRC–2019–0096. Address questions about NRC docket IDs in *Regulations.gov* to Jennifer Borges; telephone: 301–287–9127; email: *Jennifer.Borges@nrc.gov.* For technical questions, contact the individual listed

in the **FOR FURTHER INFORMATION CONTACT** section of this document.

• *NRC's Agencywide Documents Access and Management System (ADAMS):* You may obtain publicly-available documents online in the ADAMS Public Documents collection at *http://www.nrc.gov/reading-rm/adams.html.* To begin the search, select ''Begin Web-based ADAMS Search.'' For problems with ADAMS, please contact the NRC's Public Document Room (PDR) reference staff at 1–800–397–4209, 301–415–4737, or by email to *pdr.resource@nrc.gov.* The ADAMS accession number for each document referenced (if it is available in ADAMS) is provided the first time that it is mentioned in this document. In addition, for the convenience of the reader, the ADAMS accession numbers are provided in a table in the ''Availability of Documents'' section of this document.

• *NRC's PDR:* You may examine and purchase copies of public documents at the NRC's PDR, Room O1–F21, One White Flint North, 11555 Rockville Pike, Rockville, Maryland 20852.

FOR FURTHER INFORMATION CONTACT: Amy M. Snyder, Office of Nuclear Material Safety and Safeguards, U.S. Nuclear Regulatory Commission, Washington, DC 20555–0001; telephone: 301–415–6822; email: *Amy.Snyder@nrc.gov.*

SUPPLEMENTARY INFORMATION:

I. Background

The Commission has determined that, pursuant to section 50.12 of title 10 of the *Code of Federal Regulations* (CFR), Exelon's request for exemptions from certain EP requirements in 10 CFR 50.47(b), 10 CFR 50.47(c)(2), and 10 CFR part 50, appendix E, section IV, and as summarized in Enclosure 2 to SECY–18–0062, are authorized by law, will not present an undue risk to the public health and safety, and are consistent with the common defense and security. Also, special circumstances are present. Therefore, the Commission hereby grants Exelon's exemptions from certain EP requirements in 10 CFR 50.47(b), 10 CFR 50.47(c)(2), and 10 CFR part 50, appendix E, section IV, as discussed and evaluated in detail in the NRC staff's safety evaluation associated with this exemption. The exemptions are effective as of 285 days after permanent cessation of power operations.

II. Availability of Documents

The documents identified in the following table are available for public inspection through ADAMS, a public web page, or by using one of the methods discussed in the **ADDRESSES** section of this document.

Document title	Date	ADAMS accession No. or public web page
Exelon Generation Company, LLC, letter to U.S. Nuclear Regulatory Commission, ''Certification of Permanent Cessation of Power Operations for Oyster Creek Nuclear Generating Station.''.	February 14, 2018	ML18045A084.
Exelon Generation Company, LLC, letter to U.S. Nuclear Regulatory Commission, ''Certification of Permanent Removal of Fuel from the Reactor Vessel for Oyster Creek Nuclear Generating Station.''.	September 25, 2018	ML18268A258.
Exelon Generation Company, LLC, letter to U.S. Nuclear Regulatory Commission, ''License Amendment Request—Proposed Change of Effective and Implementation Dates of License Amendment No. 294, Oyster Creek Emergency Plan for Permanently Defueled Emergency Plan and Emergency Action Level Scheme.''.	October 22, 2018	ML18295A384.
Exelon Generation Company, LLC, letter to U.S. Nuclear Regulatory Commission, ''License Amendment Request Supplement—Proposed Change of Effective and Implementation Dates of License Amendment No. 294, Oyster Creek Emergency Plan for Permanently Defueled Emergency Plan and Emergency Action Level Scheme.''.	November 6, 2018	ML18310A306.
Exelon Generation Company, LLC, letter to U.S. Nuclear Regulatory Commission, ''Response to Request for Additional Information (RAI) and Supplemental Information Regarding Request for Changing Emergency Preparedness License Amendment No. 294 Effective Date''.	February 13, 2019	ML19044A643.
U.S. Nuclear Regulatory Commission, NUREG/CR–6451, ''A Safety and Regulatory Assessment of Generic BWR and PWR Permanently Shutdown Nuclear Power Plants.''.	August 1997	ML082260098.
U.S. Nuclear Regulatory Commission, NUREG–1738, ''Technical Study of Spent Fuel Pool Accident Risk at Decommissioning Nuclear Power Plants.''.	February 2001	ML010430066.
Federal Emergency Management Agency Comprehensive Preparedness Guide 101, ''Developing and Maintaining Emergency Operations Plans,'' Version 2.0.	November 2010	http://www.fema.gov/pdf/about/divisions/npd/CPG_101_V2.pdf.
U.S. Nuclear Regulatory Commission, NUREG–2161, ''Consequence Study of a Beyond Design-Basis Earthquake Affecting the Spent Fuel Pool for a U.S. Mark I Boiling Water Reactor.''.	September 2014	ML14255A365.
U.S. Nuclear Regulatory Commission, COMSECY–13–0030, ''Staff Evaluation and Recommendation for Japan Lessons-Learned Tier 3 Issue on Expedited Transfer of Spent Fuel.''.	November 12, 2013	ML13329A918 (Package)
U.S. Nuclear Regulatory Commission, SECY–18–0062, ''Request by the Exelon Generation Company, LLC for Exemptions from Certain Emergency Planning Requirements for the Oyster Creek Nuclear Generating Station.''.	May 31, 2018	ML18030B340 (Package).
U.S. Nuclear Regulatory Commission, ''Staff Requirements—SECY–18–0062, Request by the Exelon Generation Company, LLC for Exemptions from Certain Emergency Planning Requirements for the Oyster Creek Nuclear Generating Station.''.	July 17, 2018	ML18198A449.
Exelon Generation Company, LLC, letter to U.S. Nuclear Regulatory Commission, ''Supplement to Request for Exemption from Portions of 10 CFR 50.47 and 10 CFR 50 part 50, Appendix E.''.	March 8, 2018	ML18067A087.
Exelon Generation Company, LLC, letter to U.S. Nuclear Regulatory Commission, ''Response to Request for Additional Information (RAI) Related to Exemption Request from Portions of 10 CFR 50.47 and 10 CFR 50 part 50, Appendix E.''.	March 19, 2018	ML18078A146.

Document title	Date	ADAMS accession No. or public web page
U.S. Nuclear Regulatory Commission, letter to Exelon Generation Company, LLC ''Oyster Creek Nuclear Generating Station—Exemptions from Certain Emergency Planning Requirements and Related Safety Evaluation.''.	October 16, 2018	ML18220A980.

The text of the exemption is attached.

Dated at Rockville, Maryland, on June 13, 2019.

For the Nuclear Regulatory Commission.

Bruce A. Watson,

Chief, Reactor Decommissioning Branch, Division of Decommissioning, Uranium Recovery, and Waste Programs, Office of Nuclear Material Safety and Safeguards.

Attachment–Exemption

Nuclear Regulatory Commission

Docket No. 50–219

Exelon Generation Company, LLC

Oyster Creek Nuclear Generating Station

Exemption

I. Background

Exelon Generation Company, LLC (Exelon or the licensee) is the holder of Renewed Facility Operating License No. DPR–16 for Oyster Creek Nuclear Generating Station (Oyster Creek). The license provides, among other things, that the facility is subject to all rules, regulations, and orders of the U.S. Nuclear Regulatory Commission (NRC) now or hereafter in effect. The facility is located in Ocean County, New Jersey.

By letter dated February 14, 2018 (Agencywide Documents Access and Management System (ADAMS) Accession No. ML18045A084), Exelon submitted a certification to the NRC that it would permanently cease power operations at Oyster Creek no later than October 31, 2018. On September 17, 2018, Exelon permanently ceased power operations at Oyster Creek. By letter dated September 25, 2018 (ADAMS Accession No. ML18268A258), Exelon certified the permanent removal of fuel from the Oyster Creek reactor vessel.

In accordance with Section 50.82(a)(2) of Title 10 of the *Code of Federal Regulations* (10 CFR), the license for a power reactor facility no longer authorizes operation of the reactor or emplacement or retention of fuel into the reactor vessel upon the docketing of the certifications for permanent cessation of operations and permanent removal of fuel from the reactor vessel. The facility is still authorized to possess and store irradiated (*i.e.,* spent) nuclear fuel. Spent fuel is currently stored onsite in the Oyster Creek spent fuel pool (SFP) and a dry cask independent spent fuel storage installation (ISFSI) at the Oyster Creek facility.

Many of the accident scenarios postulated in the updated final safety analysis reports (UFSARs) for operating power reactors involve failures or malfunctions of systems, which could affect the fuel in the reactor core and, in the most severe postulated accidents, would involve the release of large quantities of fission products. With the permanent cessation of operations at Oyster Creek and the permanent removal of the fuel from the reactor vessel, such accidents are no longer possible. The reactor, reactor coolant system, and supporting systems are no longer in operation and have no function related to the storage of the spent fuel. Therefore, emergency planning (EP) provisions for postulated accidents involving failure or malfunction of the reactor, reactor coolant system, or supporting systems are no longer applicable.

The EP requirements of 10 CFR 50.47, ''Emergency plans,'' and Appendix E to 10 CFR part 50, ''Emergency Planning and Preparedness for Production and Utilization Facilities,'' continue to apply to nuclear power reactors that have permanently ceased operation and have permanently removed all fuel from the reactor vessel. There are no explicit regulatory provisions distinguishing EP requirements for a power reactor that is permanently shutdown and defueled from those for a reactor that is authorized to operate. To reduce or eliminate EP requirements that are no longer necessary due to the decommissioning status of the facility, Exelon must obtain exemptions from those EP regulations.

On October 16, 2018, the NRC exempted Exelon from certain EP requirements for Oyster Creek (ADAMS Accession No. ML18220A980). These exemptions eliminated the requirements to maintain an offsite radiological emergency preparedness plan and reduce the scope of onsite EP activities at Oyster Creek, based on the reduced risks of accidents that could result in an offsite radiological release at a decommissioning nuclear power reactor. The October 16, 2018, exemptions were to become effective no earlier than 12 months (365 days) after permanent cessation of power operations at Oyster Creek.

II. Request/Action

By letter dated November 6, 2018 (ADAMS Accession No. ML18310A306), as supplemented by letter dated February 13, 2019 (ADAMS Accession No. ML19044A643), Exelon requested to modify the effective date of the October 16, 2018, exemptions from 12 months (365 days) to 9.38 months (285 days) after permanent cessation of power operations. Oyster Creek permanently ceased power operations on September 17, 2018. Therefore, the revised effective date of the exemptions would be June 29, 2019. To provide a complete record of the NRC staff's review, the NRC is reissuing the October 16, 2018, exemptions to reflect the revised effective date. These reissued exemptions supersede the exemptions issued on October 16, 2018.

III. Discussion

In accordance with 10 CFR 50.12, ''Specific exemptions,'' the Commission may, upon application by any interested person or upon its own initiative, grant exemptions from the requirements of 10 CFR part 50 when: (1) The exemptions are authorized by law, will not present an undue risk to public health and safety, and are consistent with the common defense and security; and (2) any of the special circumstances listed in 10 CFR 50.12(a)(2) are present. These special circumstances include, among other things, that the application of the regulation in the particular circumstances would not serve the underlying purpose of the rule or is not necessary to achieve the underlying purpose of the rule.

As noted previously, the EP regulations contained in 10 CFR 50.47(b) and Appendix E to 10 CFR part 50 apply to both operating and shutdown power reactors. The NRC has consistently acknowledged that the risk of an offsite radiological release at a power reactor that has permanently ceased operations and permanently removed fuel from the reactor vessel is significantly lower, and the types of possible accidents are significantly fewer, than at an operating power reactor. However, the EP regulations do not recognize that once a power reactor permanently ceases operation, the risk of a large radiological release from credible emergency accident scenarios

is significantly reduced. The reduced risk for any significant offsite radiological release is based on two factors. One factor is the elimination of accidents applicable only to an operating power reactor, resulting in fewer credible accident scenarios. The second factor is the reduced short-lived radionuclide inventory and decay heat production due to radioactive decay. Due to the permanently defueled status of the reactor, no new spent fuel will be added to the SFP and the radionuclides in the current spent fuel will continue to decay as the spent fuel ages. The irradiated fuel will produce less heat due to radioactive decay, increasing the available time to mitigate a loss of water inventory from the SFP. The NRC's NUREG/CR–6451, ''A Safety and Regulatory Assessment of Generic BWR [Boiling Water Reactor] and PWR [Pressurized Water Reactor] Permanently Shutdown Nuclear Power Plants,'' dated August 1997 (ADAMS Accession No. ML082260098), and the NRC's NUREG–1738, ''Technical Study of Spent Fuel Pool Accident Risk at Decommissioning Nuclear Power Plants,'' dated February 2001 (ADAMS Accession No. ML010430066), confirmed that for permanently shutdown and defueled power reactors that are bounded by the assumptions and conditions in the reports, the risk of offsite radiological release is significantly less than for an operating power reactor.

The EP exemptions previously approved for Oyster Creek were based on the licensee's demonstration that: (1) The radiological consequences of design-basis accidents would not exceed the limits of the U.S. Environmental Protection Agency's (EPA) early phase Protective Action Guides (PAGs) of one roentgen equivalent man (rem) at the exclusion area boundary; and (2) in the highly unlikely event of a beyond-design-basis accident resulting in a loss of all modes of heat transfer from the fuel stored in the SFP, there is sufficient time to initiate appropriate mitigating actions, and if needed, for offsite authorities to implement offsite protective actions using a Comprehensive Emergency Management Program, or ''all-hazards,'' approach to protect the health and safety of the public.

With respect to design-basis accidents at Oyster Creek, the licensee demonstrated that, as of 33 days after the permanent cessation of operations, the radiological consequences of the only remaining design-basis accident with potential for offsite radiological release (the fuel handling accident (FHA) in the Auxiliary Building, where the SFP is located) will not exceed the limits of the EPA early phase PAGs to the public beyond the exclusion area boundary. Exelon stated that this analysis remains unchanged. Because the requested effective date of the exemptions is 285 days following permanent cessation of power operations, the 33-day decay period necessary for the FHA dose to decrease within the EPA PAGs remains bounded.

With respect to beyond-design-basis accidents at Oyster Creek, the licensee analyzed a drain down of the SFP water that would effectively impede any decay heat removal. The analysis demonstrates that at 285 days after permanent cessation of power operations, there would be 10 hours after the assemblies have been uncovered with all cooling lost until the limiting fuel assembly (for decay heat and adiabatic heatup analysis) reaches 900 degrees Celsius (°C), the temperature used to assess the potential onset of fission product release. The analysis conservatively assumes that the heat up time starts when the SFP has been completely drained with all cooling lost, although it is likely that site personnel will start to respond to an incident when drain down starts. The analysis also does not consider the period of time from the initiating event causing loss of SFP water inventory until cooling is lost.

The NRC reviewed the licensee's justification for the exemptions, including the modified effective date, against the criteria in 10 CFR 50.12(a) and determined, as described below, that the criteria in 10 CFR 50.12(a) will be met, and that the exemptions should be granted 285 days after the permanent cessation of power operations. As discussed above, in October 2018, the NRC staff previously granted Exelon exemptions from the relevant EP requirements, with an effective date of these exemptions being 365 days after the permanent cessation of operations. Subsequently, in November 2018, Exelon requested to change the effective date of these exemptions from 365 days to 285 days. Consequently, the NRC is reissuing the October 2018 exemptions with a revised effective date of 285 days after Oyster Creek has permanently ceased operations.

An assessment of the Exelon EP exemptions originally issued on October 16, 2018, is described in SECY–18–0062, ''Request by the Exelon Generation Company, LLC for Exemptions from Certain Emergency Planning Requirements for the Oyster Creek Nuclear Generating Station,'' dated May 31, 2018 (ADAMS Accession No. ML18030B340). The Commission approved the NRC staff's recommendation to grant the exemptions in the staff requirements memorandum to SECY–18–0062, dated July 17, 2018 (ADAMS Accession No. ML18198A449).

The NRC staff's detailed review and technical basis for the approval of the specific EP exemptions are provided in the NRC staff's safety evaluation associated with the October 16, 2018 exemptions (ADAMS Accession No. ML18220A980). That safety evaluation remains valid as to all aspects of the exemptions other than the revised effective date. The NRC staff's detailed review and technical basis for the modification of the effective date of the exemptions is provided in a separate safety evaluation dated June 11, 2019 (ADAMS Accession No. ML19095A873).

In sum, the NRC reviewed the licensee's justification for the requested exemptions, including the modified effective date, against the criteria in 10 CFR 50.12(a) and determined, as described below, that the criteria in 10 CFR 50.12(a) will be met, and that the exemptions should be granted 285 days after the permanent cessation of power operations. To provide a complete record of the NRC staff's analysis, the NRC is reissuing the specific EP exemptions with the revised effective date of 285 days after the permanent cessation of power operations.

A. The Exemptions are Authorized by Law

The licensee has proposed exemptions from certain EP requirements in 10 CFR 50.47(b), 10 CFR 50.47(c)(2), and 10 CFR 50, Appendix E, Section IV, that would allow Exelon to revise the Oyster Creek Emergency Plan to reflect the permanently shutdown and defueled condition of the facility. The licensee has also requested to modify the effective date for the implementation of the previously approved exemptions from 12 months to 9.38 months (285 days) after permanent cessation of power operations. As stated above, in accordance with 10 CFR 50.12, the Commission may, upon application by any interested person or upon its own initiative, grant exemptions from the requirements of 10 CFR part 50. The NRC staff has determined that reissuing the licensee's proposed exemptions, with the modified effective date, will not result in a violation of the Atomic Energy Act of 1954, as amended, or the NRC's regulations. Therefore, the exemptions are authorized by law.

B. The Exemption Presents No Undue Risk to Public Health and Safety

As stated previously, Exelon provided an analysis showing that the radiological consequences of design-basis accidents will not exceed the limits of the EPA early phase PAGs at the exclusion area boundary. Therefore, based on the reduced risk of radiological consequences from design-basis accidents still possible at Oyster Creek 285 days after the plant has permanently ceased power operations, formal offsite radiological emergency preparedness plans required under 10 CFR part 50 will no longer be needed for protection of the public beyond the exclusion area boundary.

Exelon provided an analysis showing that, as of 33 days after permanent cessation of power operations, the radiological consequences of the only remaining design-basis accident with potential for offsite radiological release (FHA in the Auxiliary Building) will not exceed the limits of the EPA early phase PAGs to the public beyond the exclusion area boundary. Because the requested effective date of the exemption is 285 days following permanent cessation of power operations, the 33-day decay necessary for the FHA dose to decrease within the EPA PAGs remains bounded. Oyster Creek permanently ceased power operations on September 17, 2018.

In addition, the licensee analyzed beyond-design-basis accidents at Oyster Creek, which would result in a drain down of the SFP water that would effectively impede any decay heat removal. The analysis demonstrates that at 285 days after permanent cessation of power operations, there would be 10 hours after the assemblies have been uncovered until the limiting fuel assembly (for decay heat and adiabatic heatup analysis) reaches 900 °C, the temperature used to assess the potential onset of fission product release.

Exelon has demonstrated that sufficient time continues to exist to implement prompt SFP mitigative action, and if warranted, for offsite governmental officials to implement measures to protect the public using a CEMP, or ''all-hazards,'' approach. As such, the determination that formal offsite radiological emergency preparedness plans required under 10 CFR part 50 will no longer be needed for protection of the public beyond the exclusion area boundary remains valid.

Further, NUREG–1738 confirms that the risk of beyond-design-basis accidents is greatly reduced at permanently shutdown and defueled reactors. The NRC staff's analyses in NUREG–1738 conclude that the event sequences important to risk at permanently shutdown and defueled power reactors are limited to large earthquakes and cask drop events. For EP assessments, this is an important difference relative to operating power reactors, where typically a large number of different sequences make significant contributions to risk. As described in NUREG–1738, relaxation of offsite EP requirements in 10 CFR part 50 beyond a few months after shutdown resulted in only a small change in risk. The report further concludes that the change in risk due to relaxation of offsite EP requirements is small because the overall risk is low and because even under current EP requirements for operating power reactors, EP was judged to have marginal impact on evacuation effectiveness for the severe earthquakes that dominate SFP risk. All other sequences including cask drops (for which offsite radiological emergency preparedness plans are expected to be more effective) are too low in likelihood to have a significant impact on risk.

Therefore, reissuing the previously approved exemptions with a modified effective date of 9.28 months (285 days) after permanent cessation of power operations will not present an undue risk to the public health and safety.

C. The Exemptions are Consistent With the Common Defense and Security

The reissued exemptions involve EP requirements under 10 CFR part 50 and will allow Exelon to revise the Oyster Creek Emergency Plan to reflect the permanently shutdown and defueled condition of the facility. Physical security measures at Oyster Creek are not affected by the reissued EP exemptions with the revised effective date. The discontinuation of formal offsite radiological emergency preparedness plans and the reduction in scope of the onsite EP activities at Oyster Creek will not adversely affect Exelon's ability to physically secure the site or protect special nuclear material. Therefore, the reissued exemptions are consistent with common defense and security.

D. Special Circumstances

Special circumstances, in accordance with 10 CFR 50.12(a)(2)(ii), are present whenever application of the regulation in the particular circumstances is not necessary to achieve the underlying purpose of the rule. The underlying purpose of 10 CFR 50.47(b), 10 CFR 50.47(c)(2), and 10 CFR part 50, Appendix E, Section IV, is to provide reasonable assurance that adequate protective measures can and will be taken in the event of a radiological emergency, to establish plume exposure and ingestion pathway emergency planning zones for nuclear power plants, and to ensure that licensees maintain effective offsite and onsite radiological emergency preparedness plans. The standards and requirements in these regulations were developed by considering the risks associated with operation of a power reactor at its licensed full-power level. These risks include the potential for a reactor accident with offsite radiological dose consequences.

As previously discussed, because Oyster Creek is permanently shut down and defueled, there is no longer a risk of a significant offsite radiological release from a design-basis accident exceeding EPA early phase PAGs at the exclusion area boundary and the risk of a significant offsite radiological release from a beyond-design-basis accident is greatly reduced when compared to an operating power reactor. The NRC staff has confirmed the reduced risks at Oyster Creek by comparing the generic risk assumptions in the analyses in NUREG–1738 to site-specific conditions at Oyster Creek and determined that the risk values in NUREG–1738 bound the risks presented at Oyster Creek. As indicated by the results of the research conducted for NUREG–1738, and more recently for NUREG–2161, ''Consequence Study of a Beyond-Design-Basis Earthquake Affecting the Spent Fuel Pool for a U.S. Mark I Boiling Water Reactor,'' dated September 2014 (ADAMS Accession No. ML14255A365), while other consequences can be extensive, accidents from SFPs with significant decay time have little potential to cause offsite early fatalities, even if the formal offsite radiological EP requirements were relaxed. The licensee's analysis of a beyond-design-basis accident involving a complete loss of SFP water inventory, based on an adiabatic heatup analysis of the limiting fuel assembly for decay heat, shows that within 285 days after permanent cessation of power operations, the time for the limiting fuel assembly to reach 900 °C is at least 10 hours after the assemblies have been uncovered assuming a loss of all cooling means.

The only analyzed beyond-design-basis accident scenario that progresses to a condition where a significant offsite release might occur involves the highly unlikely event where the SFP drains in such a way that all modes of cooling or heat transfer are assumed to be unavailable, which is referred to as an adiabatic heatup of the spent fuel. The licensee's analysis of this beyond-

design-basis accident shows that within 285 days after permanent cessation of power operations, at least 10 hours would be available between the time that all cooling means are lost to the fuel (at which time adiabatic heatup is conservatively assumed to begin), until the fuel cladding reaches a temperature of 900 °C, which is the temperature associated with rapid cladding oxidation and the potential for a significant radiological release. This analysis conservatively does not include the period of time from the initiating event causing a loss of SFP water inventory until all cooling means are lost.

The NRC staff has verified Exelon's analyses and its calculations. The analyses provide reasonable assurance that in reissuing the requested exemptions to Exelon, there is no design-basis accident that will result in an offsite radiological release exceeding the EPA early phase PAGs at the exclusion area boundary. In the highly unlikely event of a beyond-design-basis accident affecting the SFP that results in a complete loss of heat removal via all modes of heat transfer, there will be over 10 hours available before an offsite release might occur and, therefore, at least 10 hours to initiate appropriate mitigating actions to restore a means of heat removal to the spent fuel. If a radiological release were projected to occur under this highly unlikely scenario, a minimum of 10 hours is considered sufficient time for offsite authorities to implement protective actions using a CEMP, or ''all-hazards,'' approach to protect the health and safety of the public.

Exemptions from the offsite EP requirements in 10 CFR part 50 have previously been approved by the NRC when the site-specific analyses show that at least 10 hours is available following a loss of SFP coolant inventory accident with no air cooling (or other methods of removing decay heat) until cladding of the hottest fuel assembly reaches the rapid oxidation temperature. The NRC staff concluded in its previously granted exemptions, as it does with Exelon's requested EP exemptions, that if a minimum of 10 hours is available to initiate mitigative actions consistent with plant conditions or, if needed, for offsite authorities to implement protective actions using a CEMP approach, then formal offsite radiological emergency preparedness plans, required under 10 CFR part 50, are not necessary at permanently shutdown and defueled facilities.

Additionally, Oyster Creek committed to maintaining SFP makeup strategies in its letters to the NRC dated March 8 and 19, 2018 (ADAMS Accession Nos. ML18067A087 and ML18078A146, respectively). The multiple strategies for providing makeup to the SFP include: Using existing plant systems for inventory makeup; an internal strategy that relies on the fire protection system with redundant pumps (one diesel-driven and one electric motor-driven); and onsite diesel fire truck that can take suction from the Barnegat Bay. These strategies will continue to be required as condition 2.C.(8), ''Mitigation Strategy License Condition,'' of renewed facility operating license DPR–16 for Oyster Creek. Considering the very low probability of beyond-design-basis accidents affecting the SFP, these diverse strategies provide multiple methods to obtain additional makeup or spray to the SFP before the onset of any postulated offsite radiological release.

For all of the reasons stated above, the NRC staff finds that the licensee's requested exemptions, including the modified effective date, meet the underlying purpose of all of the standards in 10 CFR 50.47(b), and requirements in 10 CFR 50.47(c)(2) and 10 CFR part 50, Appendix E, and satisfy the special circumstances provision in 10 CFR 50.12(a)(2)(ii) in view of the greatly reduced risk of offsite radiological consequences associated with the permanently shutdown and defueled state of the Oyster Creek facility 285 days after permanent cessation of power operations.

The NRC staff has concluded that the exemptions being granted by this action will maintain an acceptable level of emergency preparedness at Oyster Creek and, if needed, that there is reasonable assurance that adequate offsite protective measures can and will be taken by State and local government agencies using a CEMP, or ''all-hazards,'' approach in the unlikely event of a radiological emergency at Oyster Creek. Because the underlying purposes of the rules, as exempted, would continue to be achieved, even with the elimination of the requirements under 10 CFR part 50 to maintain formal offsite radiological emergency preparedness plans and the reduction in the scope of the onsite emergency planning activities at Oyster Creek, the special circumstances required by 10 CFR 50.12(a)(2)(ii) exist.

E. Environmental Considerations

In accordance with 10 CFR 51.31(a), the Commission has determined that the reissuing the EP exemptions with a revised effective date will not have a significant effect on the quality of the human environment. The NRC staff previously analyzed the October 16, 2018, EP exemptions in a Finding of No Significant Impact and associated Environmental Assessment published in the **Federal Register** on August 13, 2018 (83 FR 40092). That evaluation remains valid as to all aspects of the EP exemptions other than the revised effective date. The NRC staff analyzed the environmental impacts of the revised effective date in a separate Finding of No Significant Impact and associated Environmental Assessment published in the **Federal Register** on May 1, 2019 (84 FR 18586).

IV. Conclusions

Accordingly, the Commission has determined that, pursuant to 10 CFR 50.12, reissuing the specific EP exemptions originally granted on October 16, 2018, with the revised effective date of 285 days after permanent cessation of operations will not present an undue risk to the public health and safety and is consistent with the common defense and security. Also, special circumstances are present. Therefore, the Commission hereby reissues Exelon's exemption from certain EP requirements in 10 CFR 50.47(b), 10 CFR 50.47(c)(2), and 10 CFR part 50, Appendix E, as discussed and evaluated in detail in the NRC staff's safety evaluation associated with these exemptions. Oyster Creek permanently ceased power operations on September 17, 2018. Therefore, the revised effective date of the reissued exemptions is June 29, 2019.

Dated at Rockville, Maryland, this 11th day of June, 2019.

For the Nuclear Regulatory Commission.

/RA/

John R. Tappert,
Director, Division of Decommissioning, Uranium Recovery and Waste Processing.

[FR Doc. 2019–12803 Filed 6–17–19; 8:45 am]

BILLING CODE 7590–01–P

NUCLEAR REGULATORY COMMISSION

[Docket No. 50–219; NRC–2018–0237]

Holtec Decommissioning International, LLC; Oyster Creek Nuclear Generating Station

AGENCY: Nuclear Regulatory Commission.

ACTION: Environmental assessment and finding of no significant impact; issuance.

SUMMARY: The U.S. Nuclear Regulatory Commission (NRC) is considering issuance of exemptions in response to a November 30, 2018, request from Holtec

Decommissioning International, LLC (HDI), for the Oyster Creek Nuclear Generating Station (Oyster Creek). The exemptions would permit HDI to use funds from the Oyster Creek decommissioning trust fund (DTF or the Trust) for irradiated fuel management activities and site restoration. The exemptions would also allow HDI to use withdrawals from the Trust for these activities without prior notification to the NRC. The NRC is issuing a final Environmental Assessment (EA) and final Finding of No Significant Impact (FONSI) associated with the proposed exemptions.

DATES: The EA and FONSI referenced in this document are available on June 18, 2019.

ADDRESSES: Please refer to Docket ID NRC–2018–0237 when contacting the NRC about the availability of information regarding this document. You may obtain publicly-available information related to this document using any of the following methods:

- *Federal Rulemaking Website:* Go to *http://www.regulations.gov* and search for Docket ID NRC–2018–0237. Address questions about NRC docket IDs in *Regulations.gov* to Jennifer Borges; telephone: 301–287–9127; email: *Jennifer.Borges@nrc.gov.* For technical questions, contact the individual listed in the **FOR FURTHER INFORMATION CONTACT** section of this document.
- *NRC's Agencywide Documents Access and Management System (ADAMS):* You may obtain publicly-available documents online in the ADAMS Public Documents collection at *http://www.nrc.gov/reading-rm/adams.html.* To begin the search, select ''Begin Web-based ADAMS Search.'' For problems with ADAMS, please contact the NRC's Public Document Room (PDR) reference staff at 1–800–397–4209, 301–415–4737, or by email to *pdr.resource@nrc.gov.* The ADAMS accession number for each document referenced (if it is available in ADAMS) is provided the first time that it is mentioned in this document. In addition, for the convenience of the reader, the ADAMS accession numbers are provided in a table in the ''Availability of Documents'' section of this document.
- *NRC's PDR:* You may examine and purchase copies of public documents at the NRC's PDR, Room O1–F21, One White Flint North, 11555 Rockville Pike, Rockville, Maryland 20852.

FOR FURTHER INFORMATION CONTACT: Amy M. Snyder, Office of Nuclear Material Safety and Safeguards, U.S. Nuclear Regulatory Commission, Washington, DC 20555–0001; telephone: 301–415–6822; email: *Amy.Snyder@nrc.gov.*

SUPPLEMENTARY INFORMATION:

I. Introduction

The NRC is considering issuance of exemptions from paragraphs 50.82(a)(8)(i)(A) and 50.75(h)(1)(iv) of title 10 of the *Code of Federal Regulations* (10 CFR) for Renewed Facility Operating License No. DPR–16, issued to Exelon Generation Company, LLC (Exelon) for the Oyster Creek facility located in Ocean County, New Jersey. On August 31, 2018, Exelon, Oyster Creek Environmental Protection, LLC (OCEP), and HDI submitted a License Transfer Application (LTA) requesting NRC approval to transfer the Oyster Creek Renewed Facility Operating License and the General License for the Oyster Creek Independent Spent Fuel Storage Installation (ISFSI) to OCEP, as the licensed owner, and to HDI, as the licensed operator.

By letter dated November 30, 2018 (ADAMS Accession No. ML18334A215), HDI requested exemptions from 10 CFR 50.82(a)(8)(i)(A) and 10 CFR 50.75(h)(1)(iv). The exemptions would allow HDI to use funds from the Trust for irradiated fuel management and site restoration activities without prior notice to the NRC, in the same manner that funds from the Trust are used under 10 CFR 50.82(a)(8) for decommissioning activities. These exemptions would only apply following NRC approval of the LTA and closing of the underlying transaction.

In accordance with 10 CFR 51.21, the NRC prepared the following EA that analyzes the environmental impacts of the proposed action. Based on the results of this EA, which are provided in Section II of this document, and in accordance with 10 CFR 51.31(a), the NRC has determined not to prepare an environmental impact statement for the proposed licensing action, and is issuing a final FONSI.

II. Environmental Assessment

Description of the Proposed Action

The proposed action would partially exempt HDI from meeting the requirements set forth in 10 CFR 50.82(a)(8)(i)(A) and 10 CFR 50.75(h)(1)(iv). Specifically, the proposed action would allow HDI to use funds from the Trust for irradiated fuel management and site restoration activities not associated with radiological decontamination and would exempt HDI from meeting the requirement for prior notification to the NRC for these activities.

The proposed action is in accordance with HDI's application dated November 30, 2018 (ADAMS Accession No. ML18334A215).

Need for the Proposed Action

As required by 10 CFR 50.82(a)(8)(i)(A), decommissioning trust funds may be used by HDI if the withdrawals are for legitimate decommissioning activity expenses, consistent with the definition of decommissioning in 10 CFR 50.2. This definition addresses radiological decontamination and does not include activities associated with irradiated fuel management or site restoration. Similarly, the requirements of 10 CFR 50.75(h)(1)(iv) restrict the use of decommissioning trust fund disbursements (other than for ordinary and incidental expenses) to decommissioning expenses until final decommissioning has been completed. Therefore, partial exemptions from 10 CFR 50.82(a)(8)(i)(A) and 10 CFR 50.75(h)(1)(iv) are needed to allow HDI to use funds from the Trust for irradiated fuel management and site restoration activities.

HDI stated that Table 1 of the application dated November 30, 2018, demonstrates that the DTF contains the amount needed to cover the estimated costs of radiological decommissioning, as well as spent fuel management and site restoration activities. The adequacy of funds in the Trust to cover the costs of activities associated with irradiated fuel management, site restoration, and radiological decontamination through license termination is supported by the revised Oyster Creek Post-Shutdown Decommissioning Activities Report submitted by HDI in a letter dated, September 28, 2018 (ADAMS Accession No. ML18275A116). HDI stated that it needs access to the funds in the Trust in excess of those needed for radiological decontamination to support irradiated fuel management and site restoration activities not associated with radiological decontamination.

The requirements of 10 CFR 50.75(h)(1)(iv) further provide that, except for decommissioning withdrawals being made under 10 CFR 50.82(a)(8) or for payments of ordinary administrative costs and other incidental expenses of the Trust, no disbursement may be made from the Trust until written notice of the intention to make a disbursement has been given to the NRC at least 30 working days in advance of the intended disbursement. Therefore, an exemption from 10 CFR 50.75(h)(1)(iv) is needed to allow HDI to use funds from the Trust for irradiated fuel

management and site restoration activities without prior NRC notification.

In summary, by letter dated November 30, 2018, HDI requested exemptions to allow Trust withdrawals, without prior written notification to the NRC, for irradiated fuel management and site restoration activities.

Environmental Impacts of the Proposed Action

The NRC has completed its evaluation of the environmental impacts of the proposed action.

The proposed action involves exemptions from requirements that are of a financial or administrative nature and that do not have an impact on the environment. The NRC has completed its evaluation of the proposed action and concludes that there is reasonable assurance that adequate funds are available in the Trust to complete all activities associated with decommissioning and irradiated fuel management and site restoration. There is no decrease in safety associated with the use of the Trust to fund activities associated with irradiated fuel management and site restoration. Paragraph 50.82(a)(8)(v) of 10 CFR requires a licensee to submit a financial assurance status report annually between the time of submitting its decommissioning cost estimate and submitting its final radiation survey and demonstrating that residual radioactivity has been reduced to a level that permits termination of its license. Paragraph 50.82(a)(8)(vi) of 10 CFR requires that if the remaining balance, plus expected rate of return, plus any other financial surety mechanism does not cover the estimated costs to complete the decommissioning, additional financial assurance must be provided to cover the cost of completion. These annual reports provide a means for the NRC to monitor the adequacy of available funding. Since the exemptions would allow HDI to use funds from the Trust that are in excess of those required for radiological decontamination of the site and the adequacy of funds dedicated for radiological decontamination are not affected by the proposed exemptions, there is reasonable assurance that there will be no environmental impact due to lack of adequate funding for decommissioning.

The proposed action will not significantly increase the probability or consequences of radiological accidents. Additionally, the NRC has concluded that the proposed changes have no direct radiological impacts. There would be no change to the types or amounts of radiological effluents that may be released, therefore, no change in occupational or public radiation exposure from the proposed changes. There are no materials or chemicals introduced into the plant that could affect the characteristics or types of effluents released offsite. In addition, the method of operation of waste processing systems will not be affected by the exemption. The proposed exemption will not result in changes to the design basis requirements of structures, systems, and components (SSCs) that function to limit or monitor the release of effluents. All the SSCs associated with limiting the release of effluents will continue to be able to perform their functions. Moreover, no changes would be made to plant buildings or the site property from the proposed changes. Therefore, there are no significant radiological environmental impacts associated with the proposed action.

With regard to potential nonradiological impacts, the proposed changes would have no direct impacts on land use or water resources, including terrestrial and aquatic biota, as they involve no new construction or modification of plant operational systems. There would be no changes to the quality or quantity of nonradiological effluents and no changes to the plant's National Pollutant Discharge Elimination System permits would be needed. In addition, there would be no noticeable effect on socioeconomic conditions in the region, no environment justice impacts, no air quality impacts, and no impacts to historic and cultural resources from the proposed changes. Therefore, there are no significant nonradiological environment impacts associated with the proposed action.

Accordingly, the NRC concludes that there are no significant environmental impacts associated with the proposed action.

Environmental Impacts of the Alternatives to the Proposed Action

As an alternative to the proposed action, the NRC considered denial of the proposed action (*i.e.,* the ''no-action'' alternative). Denial of the application would result in no change in current environmental impacts. The environmental impacts of the proposed action and the alternative action are similar.

Alternative Use of Resources

There are no unresolved conflicts concerning alternative uses of available resources under the proposed action.

Agencies or Persons Consulted

No additional agencies or persons were consulted regarding the environmental impact of the proposed action. On May 16, 2019 (ADAMS Accession No. Ml19137A015), the State of New Jersey representatives were notified of the EA and FONSI.

III. Finding of No Significant Impact

HDI has proposed exemptions from 10 CFR 50.82(a)(8)(i)(A) and 10 CFR 50.75(h)(1)(iv), which would allow HDI to use funds from the Trust for irradiated fuel management and site restoration activities, without prior written notification to the NRC. The proposed action would not significantly affect plant safety, would not have a significant adverse effect on the probability of an accident occurring, and would not have any significant radiological or nonradiological impacts. The reason the human environment would not be significantly affected is that the proposed action involves exemptions from requirements that are of a financial or administrative nature and that do not have an impact of the human environment. Consistent with 10 CFR 51.21, the NRC conducted the EA for the proposed action, and this FONSI incorporates by reference the EA included in Section II of this document. Therefore, the NRC concludes that the proposed action will not have significant effects on the quality of the human environment. Accordingly, the NRC has determined not to prepare an environmental impact statement for the proposed action.

Other than HDI's letter dated November 30, 2018, there are no other environmental documents associated with this review. This document is available for public inspection as indicated in Section I of this document.

Previous considerations regarding the environmental impacts of operating Oyster Creek Nuclear Generating Station, in accordance with its renewed operating license, is described in the ''Final Environmental Statement for Oyster Creek Nuclear Generating Station,'' dated December 1974, and NUREG–1437, Supplement 28, ''Generic Environmental Impact Statement for License Renewal of Nuclear Plants: Regarding Oyster Creek Nuclear Generating Station,'' Volumes 1 and 2, Final Report, dated January 2007 (ADAMS Accession No. ML070100234 and ML070100258.

IV. Availability of Documents

Date	Title	ADAMS Accession No.
5/16/2019	Notification from NRC to State of New Jersey of intent to publish EA/FONSI	ML19137A015
11/30/2018	Letter from HDI to NRC titled ''Request for Exemption from 10 50.82(a)(8)(i)(A) and 10 CFR 50.75(h)(1)(iv)''.	ML18334A215
2/14/2018	Letter from Exelon to NRC titled ''Certification of Permanent Cessation of Power Operations for Oyster Creek Nuclear Generating Station''.	ML18045A084
5/21/2018	Letter from Exelon to NRC titled ''Oyster Creek Nuclear Generating Station—Post-Shutdown Decommissioning Activities Report''.	ML18141A775
8/31/2018	Application for Order Approving Direct Transfer of Renewed Facility Operating License and General License and Proposed Conforming License Amendment Oyster Creek Nuclear Generating Station.	ML18243A489
9/25/2018	Letter from Exelon to NRC titled ''Certification of Permanent Removal of Fuel from the Reactor Vessel for Oyster Creek Nuclear Generating Station''.	ML18268A258
9/28/2018	Letter from HDI to NRC titled ''Notification of Revised Post-Shutdown Decommissioning Activities Report and Revised Site-Specific Decommissioning Cost Estimate for Oyster Creek Nuclear Generating Station''.	ML18275A116
12/1974	Final Environmental Statement for Oyster Creek Nuclear Generating Station	ML072200150
1/2007	NUREG–1437, Supplement 28, ''Generic Environmental Impact Statement for License Renewal of Nuclear Plants: Regarding Oyster Creek Nuclear Generating Station,'' Volumes 1 and 2.	ML070100234 ML070100258

Dated at Rockville, Maryland, on June 13, 2019.

For the Nuclear Regulatory Commission.

Bruce A. Watson,

Chief, Reactor Decommissioning Branch, Division of Decommissioning, Uranium Recovery, and Waste Programs, Office of Nuclear Material Safety and Safeguards.

[FR Doc. 2019–12799 Filed 6–17–19; 8:45 am]

BILLING CODE 7590–01–P

NUCLEAR REGULATORY COMMISSION

[NRC–2019–0001]

Sunshine Act Meetings

TIME AND DATE: Week of June 17, 2019.

PLACE: Commissioners' Conference Room, 11555 Rockville Pike, Rockville, Maryland.

STATUS: Public and Closed.

MATTERS TO BE CONSIDERED:

Week of June 17, 2019

Tuesday, June 18, 2019

9:55 a.m. Affirmation Session (Public Meeting) (Tentative)

Exelon Generation Co., LLC (Oyster Creek Nuclear Generating Station), Requests for Hearing in License Transfer Proceeding (Tentative)

This meeting will be webcast live at the Web address—*http://www.nrc.gov/.*

10:00 a.m. Briefing on Human Capital and Equal Employment Opportunity (Public Meeting) (Contact: Jason Lising: 301–287–0569)

This meeting will be webcast live at the Web address—*http://www.nrc.gov/.*

Thursday, June 20, 2019

10:00 a.m. Briefing on Results of the Agency Action Review Meeting (Public Meeting) (Contact: Andrea Mayer: 301–415–1081)

This meeting will be webcast live at the Web address—*http://www.nrc.gov/.*

Additional Information: By a vote of 4–0 on June 13 and 14, 2019, the Commission determined pursuant to U.S.C. 552b(e) and '9.107(a) of the Commission's rules that the above referenced Affirmation Session be held with less than one week notice to the public. The meeting is scheduled on June 18, 2019.

CONTACT PERSON FOR MORE INFORMATION: For more information or to verify the status of meetings, contact Denise McGovern at 301–415–0681 or via email at *Denise.McGovern@nrc.gov.* The schedule for Commission meetings is subject to change on short notice.

The NRC Commission Meeting Schedule can be found on the internet at: *http://www.nrc.gov/public-involve/public-meetings/schedule.html.*

The NRC provides reasonable accommodation to individuals with disabilities where appropriate. If you need a reasonable accommodation to participate in these public meetings or need this meeting notice or the transcript or other information from the public meetings in another format (*e.g.,* Braille, large print), please notify Kimberly Meyer-Chambers, NRC Disability Program Manager, at 301–287–0739, by videophone at 240–428–3217, or by email at *Kimberly.Meyer-Chambers@nrc.gov.* Determinations on requests for reasonable accommodation will be made on a case-by-case basis.

Members of the public may request to receive this information electronically. If you would like to be added to the distribution, please contact the Nuclear Regulatory Commission, Office of the Secretary, Washington, DC 20555 (301–415–1969), or by email at *Wendy.Moore@nrc.gov.*

Dated at Rockville, Maryland, this 14th day of June 2019.

For the Nuclear Regulatory Commission.

Denise L. McGovern,

Policy Coordinator, Office of the Secretary.

[FR Doc. 2019–13043 Filed 6–14–19; 4:15 pm]

BILLING CODE 7590–01–P

POSTAL SERVICE

Product Change—Priority Mail and First-Class Package Service Negotiated Service Agreement

AGENCY: Postal Service™.

ACTION: Notice.

SUMMARY: The Postal Service gives notice of filing a request with the Postal Regulatory Commission to add a domestic shipping services contract to the list of Negotiated Service Agreements in the Mail Classification Schedule's Competitive Products List.

DATES: *Date of required notice:* June 18, 2019.

FOR FURTHER INFORMATION CONTACT: Elizabeth Reed, 202–268–3179.

SUPPLEMENTARY INFORMATION: The United States Postal Service® hereby gives notice that, pursuant to 39 U.S.C. 3642 and 3632(b)(3), on June 13, 2019, it filed with the Postal Regulatory Commission a *USPS Request to Add Priority Mail & First-Class Package Service Contract 104 to Competitive Product List.* Documents are available at *www.prc.gov,* Docket Nos. MC2019–152, CP2019–169.

Elizabeth Reed,

Attorney, Corporate and Postal Business Law.

[FR Doc. 2019–12825 Filed 6–17–19; 8:45 am]

BILLING CODE 7710–12–P

POSTAL SERVICE

Product Change—Priority Mail Negotiated Service Agreement

AGENCY: Postal Service™.

ACTION: Notice.

SUMMARY: The Postal Service gives notice of filing a request with the Postal Regulatory Commission to add a domestic shipping services contract to the list of Negotiated Service Agreements in the Mail Classification Schedule's Competitive Products List.

DATES: *Date of required notice:* June 18, 2019.

FOR FURTHER INFORMATION CONTACT: Elizabeth Reed, 202–268–3179.

SUPPLEMENTARY INFORMATION: The United States Postal Service® hereby gives notice that, pursuant to 39 U.S.C. 3642 and 3632(b)(3), on June 13, 2019, it filed with the Postal Regulatory Commission a *USPS Request to Add Priority Mail Contract 533 to Competitive Product List.* Documents are available at *www.prc.gov,* Docket Nos. MC2019–151, CP2019–168.

Elizabeth Reed,

Attorney, Corporate and Postal Business Law.

[FR Doc. 2019–12824 Filed 6–17–19; 8:45 am]

BILLING CODE 7710–12–P

SECURITIES AND EXCHANGE COMMISSION

[SEC File No. 270–332, OMB Control No. 3235–0378]

Proposed Collection; Comment Request

Upon Written Request Copies Available From: Securities and Exchange Commission, Office of FOIA Services, 100 F Street NE, Washington, DC 20549–2736

Extension:
Form F–8

Notice is hereby given that, pursuant to the Paperwork Reduction Act of 1995 (44 U.S.C. 3501 *et seq.*), the Securities and Exchange Commission (''Commission'') is soliciting comments on the collection of information summarized below. The Commission plans to submit this existing collection of information to the Office of Management and Budget for extension and approval.

Form F–8 (17 CFR 239.38) may be used to register securities of certain Canadian issuers under the Securities Act of 1933 (15 U.S.C. 77a *et seq.*) that will be used in an exchange offer or business combination. The information collected is intended to ensure that the information required to be filed by the Commission permits verification of compliance with securities law requirements and assures the public availability of such information. We estimate that Form F–8 takes approximately one hour per response to prepare and is filed by approximately 5 respondents. We estimate that 25% of one hour per response (15 minutes) is prepared by the company for a total annual reporting burden of one hour (15 minutes/60 minutes per response × 5 responses = 1.25 hours rounded to the nearest whole number one hour).

Written comments are invited on: (a) Whether this proposed collection of information is necessary for the proper performance of the functions of the agency, including whether the information will have practical utility; (b) the accuracy of the agency's estimate of the burden imposed by the collection of information; (c) ways to enhance the quality, utility, and clarity of the information collected; and (d) ways to minimize the burden of the collection of information on respondents, including through the use of automated collection techniques or other forms of information technology. Consideration will be given to comments and suggestions submitted in writing within 60 days of this publication.

An agency may not conduct or sponsor, and a person is not required to respond to, a collection of information unless it displays a currently valid control number.

Please direct your written comment to Charles Riddle, Acting Director/Chief Information Officer, Securities and Exchange Commission, c/o Candace Kenner, 100 F Street NE, Washington, DC 20549 or send an email to: *PRA_Mailbox@sec.gov.*

Dated: June 13, 2019

Eduardo A. Aleman,

Deputy Secretary.

[FR Doc. 2019–12889 Filed 6–17–19; 8:45 am]

BILLING CODE 8011–01–P

SECURITIES AND EXCHANGE COMMISSION

[Investment Company Act Release No. 33506; File No. 812–15018]

Pioneer ETF Series Trust I, et al.

June 12, 2019.

AGENCY: Securities and Exchange Commission (''Commission'').

ACTION: Notice.

Notice of an application for an order under section 6(c) of the Investment Company Act of 1940 (the ''Act'') for an exemption from sections 2(a)(32), 5(a)(1), 22(d), and 22(e) of the Act and rule 22c–1 under the Act, under sections 6(c) and 17(b) of the Act for an exemption from sections 17(a)(1) and 17(a)(2) of the Act, and under section 12(d)(1)(J) of the Act for an exemption from sections 12(d)(1)(A) and 12(d)(1)(B) of the Act. The requested order would permit (a) actively-managed series of certain open-end management investment companies (''Funds'') to issue shares redeemable in large aggregations only (''Creation Units''); (b) secondary market transactions in Fund shares to occur at negotiated market prices rather than at net asset value (''NAV''); (c) certain Funds to pay redemption proceeds, under certain circumstances, more than seven days after the tender of shares for redemption; (d) certain affiliated persons of a Fund to deposit securities into, and receive securities from, the Fund in connection with the purchase and redemption of Creation Units; (e) certain registered management investment companies and unit investment trusts outside of the same group of investment companies as the Funds (''Funds of Funds'') to acquire shares of the Funds; and (f) certain Funds (''Feeder Funds'') to create and redeem Creation Units in-kind in a master-feeder structure.

APPLICANTS: Pioneer ETF Series Trust I (the ''Trust''), a Delaware statutory trust registered under the Act as an open-end management investment company with multiple series, Amundi Pioneer Asset Management, Inc. (the ''Initial Adviser''), a Delaware corporation registered as an investment adviser under the Investment Advisers Act of 1940, and Amundi Pioneer Distributor, Inc. (the ''Distributor''), a Massachusetts corporation and a registered broker-dealer under the Securities Exchange Act of 1934 (the ''Exchange Act'').

FILING DATES: The application was filed on April 9, 2019.

HEARING OR NOTIFICATION OF HEARING: An order granting the requested relief will be issued unless the Commission orders a hearing. Interested persons may request a hearing by writing to the Commission's Secretary and serving applicants with a copy of the request, personally or by mail. Hearing requests should be received by the Commission by 5:30 p.m. on July 5, 2019, and should be accompanied by proof of service on applicants, in the form of an affidavit, or for lawyers, a certificate of service. Pursuant to rule 0–5 under the Act, hearing requests should state the nature of the writer's interest, any facts bearing

upon the desirability of a hearing on the matter, the reason for the request, and the issues contested. Persons who wish to be notified of a hearing may request notification by writing to the Commission's Secretary.

ADDRESSES: Secretary, Securities and Exchange Commission, 100 F Street NE, Washington, DC 20549–1090; Applicants: 60 State Street, Boston, MA 02109.

FOR FURTHER INFORMATION CONTACT: Bruce R. MacNeil, Senior Counsel, at (202) 551–6817, or Kaitlin C. Bottock, Branch Chief, at (202) 551–6825 (Division of Investment Management, Chief Counsel's Office).

SUPPLEMENTARY INFORMATION: The following is a summary of the application. The complete application may be obtained via the Commission's website by searching for the file number, or for an applicant using the Company name box, at *http://www.sec.gov/search/search.htm* or by calling (202) 551–8090.

Summary of the Application

1. Applicants request an order that would allow Funds to operate as actively-managed exchange traded funds (''ETFs'').[1] Fund shares will be purchased and redeemed at their NAV in Creation Units only. All orders to purchase Creation Units and all redemption requests will be placed by or through an ''Authorized Participant'', which will have signed a participant agreement with the Distributor. Shares will be listed and traded individually on a national securities exchange, where share prices will be based on the current bid/offer market. Certain Funds may operate as Feeder Funds in a master-feeder structure. Any order granting the requested relief would be subject to the terms and conditions stated in the application.

2. Each Fund will consist of a portfolio of securities and other assets and investment positions (''Portfolio Instruments''). Each Fund will disclose on its website the identities and quantities of the Portfolio Instruments that will form the basis for the Fund's calculation of NAV at the end of the day.

3. Shares will be purchased and redeemed in Creation Units and generally on an in-kind basis. Except where the purchase or redemption will include cash under the limited circumstances specified in the application, purchasers will be required to purchase Creation Units by depositing specified instruments (''Deposit Instruments''), and shareholders redeeming their shares will receive specified instruments (''Redemption Instruments''). The Deposit Instruments and the Redemption Instruments will each correspond pro rata to the positions in the Fund's portfolio (including cash positions) except as specified in the application.

4. Because shares will not be individually redeemable, applicants request an exemption from section 5(a)(1) and section 2(a)(32) of the Act that would permit the Funds to register as open-end management investment companies and issue shares that are redeemable in Creation Units only.

5. Applicants also request an exemption from section 22(d) of the Act and rule 22c–1 under the Act as secondary market trading in shares will take place at negotiated prices, not at a current offering price described in a Fund's prospectus, and not at a price based on NAV. Applicants state that (a) secondary market trading in shares does not involve a Fund as a party and will not result in dilution of an investment in shares, and (b) to the extent different prices exist during a given trading day, or from day to day, such variances occur as a result of third-party market forces, such as supply and demand. Therefore, applicants assert that secondary market transactions in shares will not lead to discrimination or preferential treatment among purchasers. Finally, applicants represent that share market prices will be disciplined by arbitrage opportunities, which should prevent shares from trading at a material discount or premium from NAV.

6. With respect to Funds that hold non-U.S. Portfolio Instruments and that effect creations and redemptions of Creation Units in kind, applicants request relief from the requirement imposed by section 22(e) in order to allow such Funds to pay redemption proceeds within fifteen calendar days following the tender of Creation Units for redemption. Applicants assert that the requested relief would not be inconsistent with the spirit and intent of section 22(e) to prevent unreasonable, undisclosed or unforeseen delays in the actual payment of redemption proceeds.

7. Applicants request an exemption to permit Funds of Funds to acquire Fund shares beyond the limits of section 12(d)(1)(A) of the Act; and the Funds, and any principal underwriter for the Funds, and/or any broker or dealer registered under the Exchange Act, to sell shares to Funds of Funds beyond the limits of section 12(d)(1)(B) of the Act. The application's terms and conditions are designed to, among other things, help prevent any potential (i) undue influence over a Fund through control or voting power, or in connection with certain services, transactions, and underwritings, (ii) excessive layering of fees, and (iii) overly complex fund structures, which are the concerns underlying the limits in sections 12(d)(1)(A) and (B) of the Act.

8. Applicants request an exemption from sections 17(a)(1) and 17(a)(2) of the Act to permit persons that are affiliated persons, or second-tier affiliates, of the Funds, solely by virtue of certain ownership interests, to effectuate purchases and redemptions in-kind. The deposit procedures for in-kind purchases of Creation Units and the redemption procedures for in-kind redemptions of Creation Units will be the same for all purchases and redemptions and Deposit Instruments and Redemption Instruments will be valued in the same manner as those Portfolio Instruments currently held by the Funds. Applicants also seek relief from the prohibitions on affiliated transactions in section 17(a) to permit a Fund to sell its shares to and redeem its shares from a Fund of Funds, and to engage in the accompanying in-kind transactions with the Fund of Funds.[2] The purchase of Creation Units by a Fund of Funds directly from a Fund will be accomplished in accordance with the policies of the Fund of Funds and will be based on the NAVs of the Funds.

9. Applicants also request relief to permit a Feeder Fund to acquire shares of another registered investment company managed by the Adviser having substantially the same investment objectives as the Feeder Fund (''Master Fund'') beyond the limitations in section 12(d)(1)(A) and

[1] Applicants request that the order apply to the new series of the Trust as well as to additional series of the Trust and any other open-end management investment company or series thereof that currently exist or that may be created in the future (each, included in the term ''Fund''), each of which will operate as an actively-managed ETF. Any Fund will (a) be advised by the Initial Adviser or an entity controlling, controlled by, or under common control with the Initial Adviser (each such entity and any successor thereto is included in the term ''Adviser'') and (b) comply with the terms and conditions of the application. For purposes of the requested order, the term ''successor'' is limited to an entity that results from a reorganization into another jurisdiction or a change in the type of business organization.

[2] The requested relief would apply to direct sales of shares in Creation Units by a Fund to a Fund of Funds and redemptions of those shares. Applicants, moreover, are not seeking relief from section 17(a) for, and the requested relief will not apply to, transactions where a Fund could be deemed an Affiliated Person, or a Second-Tier Affiliate, of a Fund of Funds because an Adviser or an entity controlling, controlled by or under common control with an Adviser provides investment advisory services to that Fund of Funds.

permit the Master Fund, and any principal underwriter for the Master Fund, to sell shares of the Master Fund to the Feeder Fund beyond the limitations in section 12(d)(1)(B).

10. Section 6(c) of the Act permits the Commission to exempt any persons or transactions from any provision of the Act if such exemption is necessary or appropriate in the public interest and consistent with the protection of investors and the purposes fairly intended by the policy and provisions of the Act. Section 12(d)(1)(J) of the Act provides that the Commission may exempt any person, security, or transaction, or any class or classes of persons, securities, or transactions, from any provision of section 12(d)(1) if the exemption is consistent with the public interest and the protection of investors. Section 17(b) of the Act authorizes the Commission to grant an order permitting a transaction otherwise prohibited by section 17(a) if it finds that (a) the terms of the proposed transaction are fair and reasonable and do not involve overreaching on the part of any person concerned; (b) the proposed transaction is consistent with the policies of each registered investment company involved; and (c) the proposed transaction is consistent with the general purposes of the Act.

For the Commission, by the Division of Investment Management, under delegated authority.

Eduardo A. Aleman,

Deputy Secretary.

[FR Doc. 2019–12778 Filed 6–17–19; 8:45 am]

BILLING CODE 8011–01–P

SECURITIES AND EXCHANGE COMMISSION

[SEC File No. 270–536, OMB Control No. 3235–0596]

Proposed Collection; Comment Request

Upon Written Request, Copies Available From: Securities and Exchange Commission, Office of FOIA Services, 100 F Street NE, Washington, DC 20549–2736

Extension:
Rule 204A–1

Notice is hereby given that, pursuant to the Paperwork Reduction Act of 1995 (44 U.S.C. 3501 *et seq.*), the Securities and Exchange Commission (the ''Commission'') is soliciting comments on the collections of information summarized below. The Commission plans to submit these existing collections of information to the Office of Management and Budget for extension and approval.

The title for the collection of information is ''Rule 204A–1 (17 CFR 275.204A–1) under the Investment Advisers Act of 1940'' (15 U.S.C. 80b–1 *et seq.*) Rule 204A–1 (the ''Code of Ethics Rule'') requires investment advisers registered with the Commission to (i) set forth standards of conduct expected of advisory personnel (including compliance with the federal securities laws); (ii) safeguard material nonpublic information about client transactions; and (iii) require the adviser's ''access persons'' to report their personal securities transactions, including transactions in any mutual fund managed by the adviser. The Code of Ethics Rule requires access persons to obtain the adviser's approval before investing in an initial public offering or private placement. The Code of Ethics Rule also requires prompt reporting, to the adviser's chief compliance officer or another person designated in the code of ethics, of any violations of the code. Finally, the Code of Ethics Rule requires the adviser to provide each supervised person with a copy of the code and any amendments, and require the supervised persons to acknowledge, in writing, their receipt of these copies.

The purposes of the information collection requirements are to: (i) Ensure that advisers maintain codes of ethics applicable to their supervised persons; (ii) provide advisers with information about the personal securities transactions of their access persons for purposes of monitoring such transactions; (iii) provide advisory clients with information with which to evaluate advisers' codes of ethics; and (iv) assist the Commission's examination staff in assessing the adequacy of advisers' codes of ethics and assessing personal trading activity by advisers' supervised persons.

The respondents to this information collection are investment advisers registered with the Commission. The Commission has estimated that compliance with rule 204A–1 imposes a burden of approximately 91 hours per adviser annually for an estimated total annual burden of 1,194,133 hours.

An agency may not conduct or sponsor a collection of information unless it displays a currently valid OMB control number. No person shall be subject to any penalty for failing to comply with a collection of information subject to the PRA that does not display a valid OMB control number.

Written comments are invited on: (a) Whether the proposed collection of information is necessary for the proper performance of the functions of the agency, including whether the information will have practical utility; (b) the accuracy of the agency's estimate of the burden of the collection of information; (c) ways to enhance the quality, utility, and clarity of the information collected; and (d) ways to minimize the burden of the collection of information on respondents, including through the use of automated collection techniques or other forms of information technology. Consideration will be given to comments and suggestions submitted in writing within 60 days of this publication.

Please direct your written comments to Charles Riddle, Acting Director/Chief Information Officer, Securities and Exchange Commission, C/O Candace Kenner, 100 F Street NE, Washington, DC 20549; or send an email to: *PRA_Mailbox@sec.gov.*

Dated: June 13, 2019.

Eduardo A. Aleman,

Deputy Secretary.

[FR Doc. 2019–12886 Filed 6–17–19; 8:45 am]

BILLING CODE 8011–01–P

SECURITIES AND EXCHANGE COMMISSION

[Release No. 34–86094; File No. SR–CboeEDGX–2019–037)

Self-Regulatory Organizations; Cboe EDGX Exchange, Inc.; Notice of Filing and Immediate Effectiveness of a Proposed Rule Change Relating To Amend the Fat Finger Check With Respect to Limit Orders in Rule 21.17

June 12, 2019.

Pursuant to Section 19(b)(1) of the Securities Exchange Act of 1934 (''Act''),[1] and Rule 19b–4 thereunder,[2] notice is hereby given that on June 10, 2019, Cboe EDGX Exchange, Inc. (the ''Exchange'' or ''EDGX'') filed with the Securities and Exchange Commission (the ''Commission'') the proposed rule change as described in Items I, and II below, which Items have been prepared by the Exchange. The Exchange filed the proposal as a ''non-controversial'' proposed rule change pursuant to Section 19(b)(3)(A)(iii) of the Act[3] and Rule 19b–4(f)(6) thereunder.[4] The Commission is publishing this notice to solicit comments on the proposed rule change from interested persons.

I. Self-Regulatory Organization's Statement of the Terms of Substance of the Proposed Rule Change

Cboe EDGX Exchange, Inc. (the ''Exchange'' or ''EDGX'') proposes to

[1] 15 U.S.C. 78s(b)(1).

[2] 17 CFR 240.19b–4.

[3] 15 U.S.C. 78s(b)(3)(A)(iii).

[4] 17 CFR 240.19b–4(f)(6).

amend the fat finger check with respect to limit orders in Rule 21.17. The text of the proposed rule change is provided below.

(additions are *italicized;* deletions are [bracketed])

* * * * *

Rules of Cboe EDGX Exchange, Inc.

* * * * *

Rule 21.17. Additional Price Protection Mechanisms and Risk Controls

The System's acceptance and execution of orders, quotes, and bulk messages, as applicable, are subject to the price protection mechanisms and risk controls in Rule 21.16, this Rule 21.17 (related to all orders other than complex orders), Rule 21.20 (related to complex orders) and as otherwise set forth in the Rules. All numeric values established by the Exchange pursuant to this Rule will be maintained by the Exchange in publicly available specifications and/or published in a Regulatory Circular. Unless otherwise specified the price protections set forth in this Rule, including the numeric values established by the Exchange, may not be disabled or adjusted. The Exchange may share any of a User's risk settings with the Clearing Member that clears transactions on behalf of the User.

(a) No change.

(b) Limit Order Fat Finger Check. If a User submits a buy (sell) limit order to the System with a price that is more than a buffer amount established by the Exchange above (below) the NBO (NBB), or, in the case of an order received prior to [9:30 a.m.]*the conclusion of the RTH opening auction process,* [above (below) the midpoint of the NBBO at the close of the market on the previous trading day]*(i) the last disseminated NBBO on that trading day, or (ii) the midpoint of the prior trading day's closing NBBO, if no NBBO has been disseminated on that trading day,* the System will reject or cancel back to the User the limit order. This check does not apply to bulk messages.

* * * * *

The text of the proposed rule change is also available on the Exchange's website (*http://markets.cboe.com/us/options/regulation/rule_filings/edgx/*), at the Exchange's Office of the Secretary, and at the Commission's Public Reference Room.

II. Self-Regulatory Organization's Statement of the Purpose of, and Statutory Basis for, the Proposed Rule Change

In its filing with the Commission, the Exchange included statements concerning the purpose of and basis for the proposed rule change and discussed any comments it received on the proposed rule change. The text of these statements may be examined at the places specified in Item IV below. The Exchange has prepared summaries, set forth in sections A, B, and C below, of the most significant aspects of such statements.

A. Self-Regulatory Organization's Statement of the Purpose of, and Statutory Basis for, the Proposed Rule Change

1. Purpose

The proposed rule change amends the fat finger check with respect to limit orders in Rule 21.17. Current Rule 21.17(b) states if a User submits a buy (sell) limit order to the System with a price that is more than a buffer amount established by the Exchange above (below) the NBO (NBB), or, in the case of an order received prior to 9:30 a.m., above (below) the midpoint of the NBBO at the close of the market on the previous trading day, the System will reject or cancel back to the User the limit order.

The Exchange recently adopted a global trading hours (''GTH'') trading session, which will occur from 8:30 to 9:15 a.m. Eastern Time, which the Exchange intends to implement on June 24, 2019.[5] For classes that trade during the GTH trading session, there may be an NBBO disseminated prior to 9:30 a.m. Therefore, the Exchange proposes to update the fat finger check for limit orders to reflect a GTH trading session. Specifically, the Exchange proposes that in the case of an order received prior to the conclusion of the RTH opening auction process then the fat finger check amount will be the last disseminated NBBO on that trading day, or the midpoint of the prior trading day's NBBO, if no NBBO has been disseminated on that trading day.

First, the Exchange notes that it is updating the fat finger check amount to be the last disseminated NBBO on that trading day (which accounts for NBBOs disseminated during GTH),[6] or the midpoint of the prior trading day's closing NBBO, if no NBBO has been disseminated on that trading day in order to accommodate the new GTH trading session and the fact that there may be an NBBO disseminated prior to 9:30 a.m. for classes that will trade during the GTH session. For example, if it is 9:25 a.m. the check would use the last disseminated NBBO from the GTH session (*i.e.,* on that trading day), and, if no NBBO has been disseminated on that trading day then the System would pull the midpoint of the prior trading day's closing NBBO, as it currently does today. The Exchange also notes that this proposed language is substantively identical to that of the corresponding limit order fat finger rule under its affiliated exchange, Cboe C2 Exchange, Inc. (''C2''), recently filed with the Commission.[7]

Second, the Exchange notes that it is also updating the language that refers to an order received prior to 9:30 a.m. to refer to an order received prior to the conclusion of the RTH opening auction process. The Exchange notes that the conclusion of the RTH opening auction process occurs within the 9:30 a.m. minute and that the System currently applies the limit order fat finger check to orders received prior to the conclusion of the RTH opening auction process within this minute. Moreover, upon the implementation of the GTH trading session, this proposed timeframe will serve to encompass orders received from the beginning of the GTH opening process[8] through the RTH opening process. As such, the Exchange is amending this language to more accurately reflect the timeframe in which the System already applies the fat finger check, and will continue to apply the fat finger check upon the implementation of the GTH trading session.

2. Statutory Basis

The Exchange believes the proposed rule change is consistent with the Securities Exchange Act of 1934 (the ''Act'') and the rules and regulations thereunder applicable to the Exchange and, in particular, the requirements of Section 6(b) of the Act.[9] Specifically, the Exchange believes the proposed rule change is consistent with the Section 6(b)(5)[10] requirements that the rules of an exchange be designed to prevent fraudulent and manipulative acts and practices, to promote just and equitable principles of trade, to foster cooperation and coordination with persons engaged in regulating, clearing, settling, processing information with respect to, and facilitating transactions in securities, to remove impediments to

[5] *See* Securities Exchange Act Release No. 85797 (May 7, 2019), 84 FR 20920 (May 13, 2019) (Notice of Filing and Immediate Effectiveness of a Proposed Rule Change Relating To Amend the Exchange's Opening Process and Add a Global Trading Hours Session for XSP Options) (SR–CboeEDGX–2019–027). The changes in SR–CboeEDGX–2019–027 are currently effective but not yet operative; however, the proposed rule changes assume operativeness of those effective changes.

[6] *See* Rule 16.1 which states that a trading day includes both trading sessions on that day.

[7] *See* Securities Exchange Act Release No. 86066 (June 7, 2019) (SR–C2–2019–015). The changes in SR–C2–2019–015 are currently effective but not yet operative; however, the proposed rule changes assume operativeness of those effective changes.

[8] The Exchange notes this includes the queuing period as defined under Rule 21.7 which provides for the opening auction process.

[9] 15 U.S.C. 78f(b).

[10] 15 U.S.C. 78f(b)(5).

and perfect the mechanism of a free and open market and a national market system, and, in general, to protect investors and the public interest. Additionally, the Exchange believes the proposed rule change is consistent with the Section 6(b)(5) [11] requirement that the rules of an exchange not be designed to permit unfair discrimination between customers, issuers, brokers, or dealers.

In particular, the Exchange believes that by updating the fat finger check for limit orders to account for the recently adopted GTH trading session, the proposed rule change serves to remove impediments to and perfect the mechanism of a free and open market and a national market system. As described above, the check will function as it does today and the proposed change merely provides an added step that the System will take in order to account for the fact that there will be two trading sessions on the Exchange, one before 9:30 a.m. in which an NBBO may be disseminated. In addition to this, the proposed change updates language regarding the timeframe in which the System currently applies the fat finger check amounts under Rule 21.17(b). Therefore, the Exchange believes that by amending rule language to reflect the earlier GTH session time and potential NBBO dissemination during that session in connection with the fat finger check and by updating language to reflect the timeframe in which the System currently applies (and will apply with the implementation of GTH) the fat finger check to orders it receives, it will remove impediments to and perfect the mechanism of a free and open market, thereby protecting investors, by increasing transparency of the Exchange's fat finger price protection mechanism as it relates to the earlier GTH trading session and current System functionality. The Exchange also notes that this proposed change is substantively the same as the limit order fat finger check rule of its affiliated exchange, C2, recently filed with the Commission. As a result, the Exchange believes that the proposed rule change will serve to protect investors by providing similar price protection mechanisms between the affiliated exchanges, thereby bolstering understanding of the affiliated exchanges' rules and functionality for those participating across both exchanges.

B. Self-Regulatory Organization's Statement on Burden on Competition

The Exchange does not believe that the proposed rule change will impose any burden on competition that is not necessary or appropriate in furtherance of the purposes of the Act. The proposed rule change is not intended to address competitive issues, but rather to update a current price protection mechanism in connection with the addition of a GTH trading session. The Exchange does not believe that the proposed rule change to update the fat finger check as it relates to the GTH trading session will impose any burden on intramarket competition that is not necessary or appropriate in furtherance of the purposes of the Act because it will apply in the same manner to all Users' limit orders prior to the conclusion of the RTH opening auction process. Furthermore, the Exchange does not believe that the proposed change will impose any burden on intermarket competition that that is not necessary or appropriate in furtherance of the purposes of the Act because the proposed change merely updates a price protection mechanism already in place on the Exchange and applicable only to trading on the Exchange.

C. Self-Regulatory Organization's Statement on Comments on the Proposed Rule Change Received From Members, Participants, or Others

The Exchange neither solicited nor received comments on the proposed rule change.

III. Date of Effectiveness of the Proposed Rule Change and Timing for Commission Action

Because the proposed rule change does not (i) significantly affect the protection of investors or the public interest; (ii) impose any significant burden on competition; and (iii) become operative for 30 days from the date on which it was filed, or such shorter time as the Commission may designate if consistent with the protection of investors and the public interest, the proposed rule change has become effective pursuant to Section 19(b)(3)(A) of the Act [12] and Rule 19b–4(f)(6) thereunder.[13]

A proposed rule change filed under Rule 19b–4(f)(6) [14] normally does not become operative for 30 days after the date of filing. However, pursuant to Rule 19b–4(f)(6)(iii) [15] the Commission may designate a shorter time if such action is consistent with the protection of investors and the public interest.

The Exchange has asked the Commission to waive the 30-day operative delay. The Commission believes that waiving the 30-day operative delay is consistent with the protection of investors and the public interest because the proposed rule change is substantively similar to the the limit order fat finger check rule of its affiliated exchange, C2, recently filed with the Commission.[16] Thus, as represented by the Exchange, the proposed rule change does not introduce any new or novel issues. For this reason, the Commission believes that waiver of the 30-day operative delay is consistent with the protection of investors and the public interest. Therefore, the Commission hereby waives the operative delay and designates the proposal as operative upon filing.[17]

At any time within 60 days of the filing of the proposed rule change, the Commission summarily may temporarily suspend such rule change if it appears to the Commission that such action is necessary or appropriate in the public interest, for the protection of investors, or otherwise in furtherance of the purposes of the Act. If the Commission takes such action, the Commission shall institute proceedings to determine whether the proposed rule change should be approved or disapproved.

IV. Solicitation of Comments

Interested persons are invited to submit written data, views, and arguments concerning the foregoing, including whether the proposed rule change is consistent with the Act. Comments may be submitted by any of the following methods:

Electronic Comments

- Use the Commission's internet comment form (*http://www.sec.gov/rules/sro.shtml*); or
- Send an email to *rule-comments@sec.gov.* Please include File Number SR–CboeEDGX–2019–037 on the subject line.

Paper Comments

- Send paper comments in triplicate to Secretary, Securities and Exchange Commission, 100 F Street NE, Washington, DC 20549–1090.

[11] *Id.*

[12] 15 U.S.C. 78s(b)(3)(A).

[13] 17 CFR 240.19b–4(f)(6). In addition, Rule 19b–4(f)(6)(iii) requires a self-regulatory organization to give the Commission written notice of its intent to file the proposed rule change at least five business days prior to the date of filing of the proposed rule change, or such shorter time as designated by the Commission. The Exchange has satisfied this requirement.

[14] 17 CFR 240.19b–4(f)(6).

[15] 17 CFR 240.19b–4(f)(6)(iii).

[16] *See supra* note 7.

[17] For purposes only of waiving the 30-day operative delay, the Commission also has considered the proposed rule's impact on efficiency, competition, and capital formation. *See* 15 U.S.C. 78c(f).

All submissions should refer to File Number SR–CboeEDGX–2019–037. This file number should be included on the subject line if email is used. To help the Commission process and review your comments more efficiently, please use only one method. The Commission will post all comments on the Commission's internet website (*http://www.sec.gov/rules/sro.shtml*). Copies of the submission, all subsequent amendments, all written statements with respect to the proposed rule change that are filed with the Commission, and all written communications relating to the proposed rule change between the Commission and any person, other than those that may be withheld from the public in accordance with the provisions of 5 U.S.C. 552, will be available for website viewing and printing in the Commission's Public Reference Room, 100 F Street NE, Washington, DC 20549, on official business days between the hours of 10:00 a.m. and 3:00 p.m. Copies of the filing also will be available for inspection and copying at the principal office of the Exchange. All comments received will be posted without change.

Persons submitting comments are cautioned that we do not redact or edit personal identifying information from comment submissions. You should submit only information that you wish to make available publicly. All submissions should refer to File Number SR–CboeEDGX–2019–037 and should be submitted on or before July 9, 2019.

For the Commission, by the Division of Trading and Markets, pursuant to delegated authority.[18]

Eduardo A. Aleman,

Deputy Secretary.

[FR Doc. 2019–12787 Filed 6–17–19; 8:45 am]

BILLING CODE 8011–01–P

[18] 17 CFR 200.30–3(a)(12).

SECURITIES AND EXCHANGE COMMISSION

[SEC File No. 270–127, OMB Control No. 3235–0108]

Proposed Collection; Comment Request

Upon Written Request Copies Available From: Securities and Exchange Commission, Office of FOIA Services, 100 F Street NE, Washington, DC 20549–2736

Extension:
Rule 14f–1

Notice is hereby given that, pursuant to the Paperwork Reduction Act of 1995 (44 U.S.C. 3501 *et seq.*), the Securities and Exchange Commission (''Commission'') is soliciting comments on the collection of information summarized below. The Commission plans to submit this existing collection of information to the Office of Management and Budget for extension and approval.

Under Exchange Act Rule 14f–1 (17 CFR 240.14f–1), if a person or persons have acquired securities of an issuer in a transaction subject to Sections 13(d) or 14(d) of the Exchange Act, and changes a majority of the directors of the issuer otherwise than at a meeting of security holders, then the issuer must file with the Commission and transmit to security holders information related to the change in directors within 10 days prior to the date the new majority takes office as directors. The information filed under Rule 14f–1 must be filed with the Commission and is publicly available. We estimate that it takes approximately 18 burden hours to provide the information required under Rule 14f–1 and that the information is filed by approximately 64 respondents for a total annual reporting burden of 1,152 hours (18 hours per response × 64 responses).

Written comments are invited on: (a) Whether this proposed collection of information is necessary for the performance of the functions of the agency, including whether the information will have practical utility; (b) the accuracy of the agency's estimate of the burden imposed by the collection of information; (c) ways to enhance the quality, utility, and clarity of the information collected; and (d) ways to minimize the burden of the collection of information on respondents, including through the use of automated collection techniques or other forms of information technology. Consideration will be given to comments and suggestions submitted in writing within 60 days of this publication.

An agency may not conduct or sponsor, and a person is not required to respond to, a collection of information unless it displays a currently valid control number.

Please direct your written comment to Charles Riddle, Acting Director/Chief Information Officer, Securities and Exchange Commission, c/o Candace Kenner, 100 F Street NE, Washington, DC 20549 or send an email to: *PRA_Mailbox@sec.gov.*

Dated: June 13, 2019.

Eduardo A. Aleman,

Deputy Secretary.

[FR Doc. 2019–12885 Filed 6–17–19; 8:45 am]

BILLING CODE 8011–01–P

SECURITIES AND EXCHANGE COMMISSION

[Investment Company Act Release No. 33507; File No. 812–14994]

Wahed Invest LLC, et al.

June 12, 2019.

AGENCY: Securities and Exchange Commission (''Commission'').

ACTION: Notice.

Notice of an application for an order under section 6(c) of the Investment Company Act of 1940 (the ''Act'') for an exemption from sections 2(a)(32), 5(a)(1), 22(d), and 22(e) of the Act and rule 22c–1 under the Act, under sections 6(c) and 17(b) of the Act for an exemption from sections 17(a)(1) and 17(a)(2) of the Act, and under section 12(d)(1)(J) for an exemption from sections 12(d)(1)(A) and 12(d)(1)(B) of the Act. The requested order would permit (a) index-based series of certain open-end management investment companies (''Funds'') to issue shares redeemable in large aggregations only (''Creation Units''); (b) secondary market transactions in Fund shares to occur at negotiated market prices rather than at net asset value (''NAV''); (c) certain Funds to pay redemption proceeds, under certain circumstances, more than seven days after the tender of shares for redemption; (d) certain affiliated persons of a Fund to deposit securities into, and receive securities from, the Fund in connection with the purchase and redemption of Creation Units; and (e) certain registered management investment companies and unit investment trusts outside of the same group of investment companies as the Funds (''Funds of Funds'') to acquire shares of the Funds.

APPLICANTS: Wahed Invest LLC (the ''Initial Adviser''), a Delaware limited liability company that is registered as an investment adviser under the Investment Advisers Act of 1940, Listed Funds Trust (the ''Trust''), a Delaware statutory trust registered under the Act as an open-end management investment company with multiple series, and Quasar Distributors, LLC, (the ''Initial Distributor''), a Delaware limited liability company and broker-dealer registered under the Securities Exchange Act of 1934 (''Exchange Act'').

FILING DATES: The application was filed on January 3, 2019, and amended on February 14, 2019 and May 7, 2019.

HEARING OR NOTIFICATION OF HEARING: An order granting the requested relief will be issued unless the Commission orders a hearing. Interested persons may request a hearing by writing to the

Commission's Secretary and serving applicants with a copy of the request, personally or by mail. Hearing requests should be received by the Commission by 5:30 p.m. on July 8, 2019, and should be accompanied by proof of service on applicants, in the form of an affidavit, or for lawyers, a certificate of service. Pursuant to rule 0–5 under the Act, hearing requests should state the nature of the writer's interest, any facts bearing upon the desirability of a hearing on the matter, the reason for the request, and the issues contested. Persons who wish to be notified of a hearing may request notification by writing to the Commission's Secretary.

ADDRESSES: Secretary, Securities and Exchange Commission, 100 F Street NE, Washington, DC 20549–1090; Applicants: Wahed Invest LLC, 12 East 49th Street, 11th Floor, New York, New York 10017; Listed Funds Trust, c/o U.S. Bancorp Fund Services, LLC, 615 East Michigan Street, Milwaukee, Wisconsin 53202; and Quasar Distributors, LLC, 777 East Wisconsin Avenue, 6th Floor, Milwaukee, Wisconsin 53202.

FOR FURTHER INFORMATION CONTACT: Zeena Abdul-Rahman, Senior Counsel, at (202) 551–4099, or Andrea Ottomanelli Magovern, Branch Chief, at (202) 551–6821 (Division of Investment Management, Chief Counsel's Office).

SUPPLEMENTARY INFORMATION: The following is a summary of the application. The complete application may be obtained via the Commission's website by searching for the file number, or for an applicant using the Company name box, at *http://www.sec.gov/search/search.htm* or by calling (202) 551–8090.

Summary of the Application

1. Applicants request an order that would allow Funds to operate as index exchange traded funds (''ETFs'').[1] Fund shares will be purchased and redeemed at their NAV in Creation Units only. All orders to purchase Creation Units and all redemption requests will be placed by or through an ''Authorized Participant,'' which will have signed a participant agreement with the Distributor. Shares will be listed and traded individually on a national securities exchange, where share prices will be based on the current bid/offer market. Any order granting the requested relief would be subject to the terms and conditions stated in the application.

2. Each Fund will hold investment positions selected to correspond generally to the performance of an Underlying Index. In the case of Self-Indexing Funds, an affiliated person, as defined in section 2(a)(3) of the Act (''Affiliated Person''), or an affiliated person of an Affiliated Person (''Second-Tier Affiliate''), of the Trust or a Fund, of the Adviser, of any sub-adviser to or promoter of a Fund, or of the Distributor will compile, create, sponsor or maintain the Underlying Index.[2]

3. Shares will be purchased and redeemed in Creation Units and generally on an in-kind basis. Except where the purchase or redemption will include cash under the limited circumstances specified in the application, purchasers will be required to purchase Creation Units by depositing specified instruments (''Deposit Instruments''), and shareholders redeeming their shares will receive specified instruments (''Redemption Instruments''). The Deposit Instruments and the Redemption Instruments will each correspond pro rata to the positions in the Fund's portfolio (including cash positions) except as specified in the application.

4. Because shares will not be individually redeemable, applicants request an exemption from section 5(a)(1) and section 2(a)(32) of the Act that would permit the Funds to register as open-end management investment companies and issue shares that are redeemable in Creation Units only.

5. Applicants also request an exemption from section 22(d) of the Act and rule 22c–1 under the Act as secondary market trading in shares will take place at negotiated prices, not at a current offering price described in a Fund's prospectus, and not at a price based on NAV. Applicants state that (a) secondary market trading in shares does not involve a Fund as a party and will not result in dilution of an investment in shares, and (b) to the extent different prices exist during a given trading day, or from day to day, such variances occur as a result of third-party market forces, such as supply and demand. Therefore, applicants assert that secondary market transactions in shares will not lead to discrimination or preferential treatment among purchasers. Finally, applicants represent that share market prices will be disciplined by arbitrage opportunities, which should prevent shares from trading at a material discount or premium from NAV.

6. With respect to Funds that effect creations and redemptions of Creation Units in kind and that are based on certain Underlying Indexes that include foreign securities, applicants request relief from the requirement imposed by section 22(e) in order to allow such Funds to pay redemption proceeds within fifteen calendar days following the tender of Creation Units for redemption. Applicants assert that the requested relief would not be inconsistent with the spirit and intent of section 22(e) to prevent unreasonable, undisclosed or unforeseen delays in the actual payment of redemption proceeds.

7. Applicants request an exemption to permit Funds of Funds to acquire Fund shares beyond the limits of section 12(d)(1)(A) of the Act; and the Funds, and any principal underwriter for the Funds, and/or any broker or dealer registered under the Exchange Act, to sell shares to Funds of Funds beyond the limits of section 12(d)(1)(B) of the Act. The application's terms and conditions are designed to, among other things, help prevent any potential (i) undue influence over a Fund through control or voting power, or in connection with certain services, transactions, and underwritings, (ii) excessive layering of fees, and (iii) overly complex fund structures, which are the concerns underlying the limits in sections 12(d)(1)(A) and (B) of the Act.

8. Applicants request an exemption from sections 17(a)(1) and 17(a)(2) of the Act to permit persons that are Affiliated Persons, or Second-Tier Affiliates, of the Funds, solely by virtue of certain ownership interests, to effectuate purchases and redemptions in-kind. The deposit procedures for in-kind purchases of Creation Units and the redemption procedures for in-kind redemptions of Creation Units will be the same for all purchases and redemptions, and Deposit Instruments and Redemption Instruments will be valued in the same manner as those

[1] Applicants request that the order apply to the new series of the Trust identified and described in Appendix A to that application and any additional series of the Trust, and any other open-end management investment company or series thereof (each, included in the term ''Fund''), each of which will operate as an ETF and will track a specified index comprised of domestic and/or foreign equity securities and/or domestic and/or foreign fixed income securities (each, an ''Underlying Index''). Each Fund will (a) be advised by the Initial Adviser or an entity controlling, controlled by, or under common control with the Initial Adviser (each such entity and any successor thereto, an ''Adviser'') and (b) comply with the terms and conditions of the application. For purposes of the requested order, the term ''successor'' is limited to an entity or entities that result from a reorganization into another jurisdiction or a change in the type of business organization.

[2] Each Self-Indexing Fund will post on its website the identities and quantities of the investment positions that will form the basis for the Fund's calculation of its NAV at the end of the day. Applicants believe that requiring Self-Indexing Funds to maintain full portfolio transparency will help address, together with other protections, conflicts of interest with respect to such Funds.

investment positions currently held by the Funds. Applicants also seek relief from the prohibitions on affiliated transactions in section 17(a) to permit a Fund to sell its shares to and redeem its shares from a Fund of Funds, and to engage in the accompanying in-kind transactions with the Fund of Funds.[3] The purchase of Creation Units by a Fund of Funds directly from a Fund will be accomplished in accordance with the policies of the Fund of Funds and will be based on the NAVs of the Funds.

9. Section 6(c) of the Act permits the Commission to exempt any persons or transactions from any provision of the Act if such exemption is necessary or appropriate in the public interest and consistent with the protection of investors and the purposes fairly intended by the policy and provisions of the Act. Section 12(d)(1)(J) of the Act provides that the Commission may exempt any person, security, or transaction, or any class or classes of persons, securities, or transactions, from any provision of section 12(d)(1) if the exemption is consistent with the public interest and the protection of investors. Section 17(b) of the Act authorizes the Commission to grant an order permitting a transaction otherwise prohibited by section 17(a) if it finds that (a) the terms of the proposed transaction are fair and reasonable and do not involve overreaching on the part of any person concerned; (b) the proposed transaction is consistent with the policies of each registered investment company involved; and (c) the proposed transaction is consistent with the general purposes of the Act.

For the Commission, by the Division of Investment Management, under delegated authority.

Eduardo A. Aleman,

Deputy Secretary.

[FR Doc. 2019–12781 Filed 6–17–19; 8:45 am]

BILLING CODE 8011–01–P

[3] The requested relief would apply to direct sales of shares in Creation Units by a Fund to a Fund of Funds and redemptions of those shares. Applicants are not seeking relief from section 17(a) for, and the requested relief will not apply to, transactions where a Fund could be deemed an Affiliated Person, or a Second-Tier Affiliate, of a Fund of Funds because an Adviser or an entity controlling, controlled by or under common control with an Adviser provides investment advisory services to that Fund of Funds.

SECURITIES AND EXCHANGE COMMISSION

[Release No. 34–86103; File No. SR–OCC–2019–802]

Self-Regulatory Organizations; The Options Clearing Corporation; Notice of No Objection To Advance Notice Related to the Introduction of a New Liquidation Cost Model in The Options Clearing Corporation's Margin Methodology

June 13, 2019.

I. Introduction

On April 18, 2019, The Options Clearing Corporation (''OCC'') filed with the Securities and Exchange Commission (''Commission'') advance notice SR–OCC–2019–802 (''Advance Notice'') pursuant to Section 806(e)(1) of Title VIII of the Dodd-Frank Wall Street Reform and Consumer Protection Act, entitled Payment, Clearing and Settlement Supervision Act of 2010 (''Clearing Supervision Act'') [1] and Rule 19b–4(n)(1)(i) [2] under the Securities Exchange Act of 1934 (''Exchange Act'') [3] to propose changes to its margin methodology to introduce a new model to estimate the liquidation cost for all options and futures, as well as the securities in margin collateral.[4] The Advance Notice was published for public comment in the **Federal Register** on May 21, 2019,[5] and the Commission has received no comments regarding the proposal contained in the Advance Notice.[6] This publication serves as notice of no objection to the Advance Notice.

II. Background

The System for Theoretical Analysis and Numerical Simulations (''STANS'') is OCC's methodology for calculating margin requirements. OCC uses the STANS methodology to measure the exposure of portfolios of options and futures cleared by OCC and of cash instruments that are part of margin collateral. STANS margin requirements are intended to cover potential losses due to price movements over a two-day risk horizon; however, the current STANS margin requirements do not cover the potential additional liquidation costs OCC may incur in closing out a defaulted Clearing Member's portfolio.[7] Closing out positions in a defaulted Clearing Member's portfolio could entail selling longs at the bid price and covering shorts at the ask price. Additionally, even well-hedged portfolios consisting of offsetting longs and shorts would require some cost to liquidate in the event of a default. The process of modeling liquidation costs is, therefore, relevant to ensuring that OCC holds sufficient financial resources to close-out the portfolio of a defaulted Clearing Member.

OCC is proposing to introduce a new model to its margin methodology to estimate the liquidation cost for all options and futures, as well as cash instruments that are part of margin collateral. According to OCC, the purpose of this proposal is to collect additional financial resources to guard against potential shortfalls in margin requirements that may arise due to the costs of liquidating the portfolio of a defaulted Clearing Member.[8] The liquidation cost charge would be an add-on to all accounts incurring a STANS margin charge. At a high level, the proposed model would estimate the cost to liquidate a portfolio based on the mid-points of the bid-ask spreads for the financial instruments within the portfolio, and would scale up such liquidation costs for large or concentrated positions that would likely be more expensive to close out.

OCC's proposed liquidation cost model would calculate liquidation costs based on risk measures, gross contract volumes, and market bid-ask spreads. As described in the Advance Notice, the

[1] 12 U.S.C. 5465(e)(1).

[2] 17 CFR 240.19b–4(n)(1)(i).

[3] 15 U.S.C. 78a *et seq.*

[4] *See* Notice of Filing *infra* note 5, at 83 FR 23090.

[5] Securities Exchange Act Release No. 85863 (May 15, 2019), 83 FR 23090 (May 21, 2019) (SR–OCC–2019–802) (''Notice of Filing''). On April 18, 2019, OCC also filed a related proposed rule change (SR–OCC–2019–004) with the Commission pursuant to Section 19(b)(1) of the Exchange Act and Rule 19b–4 thereunder, seeking approval of changes to its rules necessary to implement the Advance Notice (''Proposed Rule Change''), 15 U.S.C. 78s(b)(1) and 17 CFR 240.19b–4, respectively. The Proposed Rule Change was published in the **Federal Register** on May 6, 2019. Securities Exchange Act Release No. 85755 (Apr. 30, 2019), 84 FR 19815 (May 6, 2019). The comment period for the related Proposed Rule Change filing closed on May 27, 2019.

[6] Since the proposal contained in the Advance Notice was also filed as a proposed rule change, all public comments received on the proposal are considered regardless of whether the comments are submitted on the proposed rule change or the Advance Notice.

[7] OCC previously introduced a liquidation cost model into STANS for risk managing only long-dated options on the Standard & Poor's (''S&P'') 500 index (''SPX'') that have a tenor of three-years or more. *See* Securities Exchange Act Release No. 70719 (October 18, 2013), 78 FR 63548 (October 24, 2013) (SR–OCC–2013–16). Under the proposal described in the Advance Notice, OCC would replace the existing liquidation model for long-dated SPX options with the proposed model. Long-dated SPX options, however, constituted less than 0.5 percent of open interest in SPX options open interest at the time of filing. *See* Notice of Filing, 84 FR at 23091, note 8.

[8] *See* Notice of Filing, 84 FR at 23091.

liquidation cost model would include the following components: (1) Calculation of liquidation costs for each sub-portfolio (as described below), which would then be aggregated at the portfolio level; (2) calculation of concentration charges that would be applied to scale-up the liquidation costs as appropriate; and (3) establishment of the liquidation cost as a floor on a Clearing Member's margin requirement.[9]

A. Liquidation Costs

The proposed model would calculate two risk-based liquidation costs for a portfolio: (1) The Vega[10] liquidation cost (''Vega LC''), and (2) the Delta[11] liquidation cost (''Delta LC''). Options products would incur both a Vega LC and a Delta LC, while Delta-one products,[12] such as futures contracts, Treasury securities, and equity securities, would incur only a Delta LC.

The process of calculating the Vega LC and the Delta LC for each portfolio would require a series of steps, beginning with the decomposition of each portfolio into a set of sub-portfolios based on the asset underlying each instrument in the portfolio. Each sub-portfolio would represent a class of instruments. As proposed, the model would include 14 potential classes of underlying assets based on the liquidity of the assets within each class.[13]

a. Vega Liquidation Cost

To calculate the Vega LC of a sub-portfolio, OCC would group contracts within a sub-portfolio into ''buckets'' based on each contract's combination of tenor and Delta.[14] OCC would then net the long and the short positions down to a single net Vega within each bucket. Next, OCC would estimate the average volatility spread (*i.e.,* the estimated bid-ask spread on implied volatility) of the contracts in each bucket.[15] The Vega LC of each bucket would be the net Vega multiplied by the average volatility spread of the bucket. The Vega LC of a sub-portfolio would be the aggregated Vega LCs of the buckets within that sub-portfolio. Similarly, the Vega LC of the full portfolio would be the aggregated Vega LCs of the sub-portfolios within that portfolio.[16]

Under the proposed model, the Vega LC calculation process could result in a portfolio-level Vega LC of zero because the process permits offsets between contracts. To prevent such a result, OCC proposes including a minimum Vega LC based on the number of contracts in each sub-portfolio. The minimum Vega LC of a sub-portfolio would be the total number of option contracts in the sub-portfolio multiplied by a fixed dollar amount.[17]

b. Delta Liquidation Cost

Similar to the Vega LC process, the model would calculate Delta LC for each sub-portfolio, which would then be aggregated at the portfolio level. OCC would first identify and net down the Delta of the positions within each sub-portfolio. For each sub-portfolio, OCC would estimate a bid-ask price spread (as a percentage). Such a percentage would represent the cost of liquidating one dollar unit of the underlying security during a period of market stress. The sub-portfolio Delta LC would be the net dollar Delta of the sub-portfolio multiplied by the bid-ask price spread percentage.[18] The portfolio-level Delta LC would be the simple sum of the sub-portfolio Delta LCs.

B. Concentration Charges

The proposed model would also address the potential risks involved in closing out large or concentrated positions in a portfolio. The size of an open position is typically measured against the relevant instrument's average daily trading volume (''ADV''). Closing out a position in excess of the ADV would be expected to increase the cost of liquidation. To account for such considerations, the proposed model incorporates a Vega concentration factor and a Delta concentration factor. The concentration factors would be used to scale the Vega LCs and the Delta LCs of each sub-portfolio and to take into account the additional risk posed by large or concentrated positions. The concentration factor could increase, but would not decrease the Vega LCs and the Delta LCs.

C. Margin Floor

As noted above, the liquidation cost charge (*i.e.,* sum of the portfolio-level Vega LC and Delta LC) would be applied as an add-on to the STANS margin requirement for each account. Because STANS margin requirements are intended to cover potential losses due to price movements over a two-day risk horizon, the STANS requirement for well-hedged portfolios may be positive, which could result in a margin credit instead of a charge.

To account for the risk of potentially liquidating a portfolio at current (instead of two-day ahead) prices, OCC proposes to design the model such that it would not permit a margin credit to offset a portfolio's liquidation cost. Under the proposal, therefore, the final margin requirement for a portfolio could not be lower than its liquidation cost charge.

III. Discussion and Commission Findings

Although the Clearing Supervision Act does not specify a standard of review for an advance notice, the stated purpose of the Clearing Supervision Act is instructive: To mitigate systemic risk in the financial system and promote financial stability by, among other things, promoting uniform risk management standards for systemically important financial market utilities (''SIFMUs'') and strengthening the liquidity of SIFMUs.[19]

[9] OCC also proposes a conforming change to its Margin Policy, which would reference OCC's model documentation.

[10] The Vega of an option represents the sensitivity of the option price to the volatility of the underlying security.

[11] The Delta of an option represents the sensitivity of the option price to the price of the underlying security.

[12] A ''Delta-one product'' refers to a product for which a change in the value of the underlying asset results in a change of the same, or nearly the same, proportion in the value of the product.

[13] For example, equity securities would be divided based on membership in commonly used market indices (*e.g.,* the S&P 100) or other market liquidity measures, into liquidity classes (which could include, but would not be limited to, High Liquid Equities, Medium Liquid Equities, and Low Liquid Equities).

[14] For example, those options contracts with a tenor of 1 month and a Delta between 0.25 and 0.75 could be grouped in one bucket within a sub-portfolio, while option contracts with a tenor of 3 month and a Delta between 0.25 and 0.75 would be grouped in another bucket. The proposed model would provide for 25 buckets (based on combinations of tenor and Delta) for each sub-portfolio.

[15] Rather than recalibrate the volatility spread of each bucket as current market conditions change, the estimated volatility spread of each bucket within a sub-portfolio would be calibrated based on data from historical periods of market stress.

[16] The process for aggregating Vega LCs, of both sub-portfolios and portfolios, under the proposed model is based on the correlations of either the bucket or the sub-portfolio being aggregated. To simplify the portfolio-level aggregation, the proposed model would use a single correlation value across all sub-portfolios in a given portfolio rather than a correlation matrix. To account for potential errors that could arise out of such a simplification, the proposed model would require the calculation of three portfolio-level Vega LCs based on the three different correlation values (*i.e.,* minimum, maximum, and average). The portfolio Vega LC would be the highest of the three Vega LCs calculated in this manner.

[17] Specifically, the minimum cost rate would initially be set as two dollars per contract, unless the position is long and the net asset value per contract is less than $2.00. (For a typical option with a contract size of 100, this would occur if the option was priced below $0.02.)

[18] As described in the Notice of Filing, the process for determining the Delta LC of a sub-portfolio of U.S. dollar Treasury bonds would be different. Specifically, it would be based on the sum of Delta LCs across six tenor buckets. *See* Notice of Filing, 84 FR at 23093.

[19] *See* 12 U.S.C. 5461(b).

Section 805(a)(2) of the Clearing Supervision Act[20] authorizes the Commission to prescribe regulations containing risk-management standards for the payment, clearing, and settlement activities of designated clearing entities engaged in designated activities for which the Commission is the supervisory agency. Section 805(b) of the Clearing Supervision Act[21] provides the following objectives and principles for the Commission's risk-management standards prescribed under Section 805(a):

- To promote robust risk management;
- to promote safety and soundness;
- to reduce systemic risks; and
- to support the stability of the broader financial system.

Section 805(c) provides, in addition, that the Commission's risk-management standards may address such areas as risk-management and default policies and procedures, among others areas.[22]

The Commission has adopted risk-management standards under Section 805(a)(2) of the Clearing Supervision Act and Section 17A of the Exchange Act (the ''Clearing Agency Rules'').[23] The Clearing Agency Rules require, among other things, each covered clearing agency to establish, implement, maintain, and enforce written policies and procedures that are reasonably designed to meet certain minimum requirements for its operations and risk-management practices on an ongoing basis.[24] As such, it is appropriate for the Commission to review advance notices against the Clearing Agency Rules and the objectives and principles of these risk management standards as described in Section 805(b) of the Clearing Supervision Act. As discussed below, the Commission believes the proposal in the Advance Notice is consistent with the objectives and principles described in Section 805(b) of the Clearing Supervision Act,[25] and in the Clearing Agency Rules, in particular Rule 17Ad–22(e)(6)(i).[26]

A. Consistency With Section 805(b) of the Clearing Supervision Act

The Commission believes that the Advance Notice is consistent with the stated objectives and principles of Section 805(b) of the Clearing Supervision Act. First, the Commission believes that adoption of the proposed liquidation cost model would be consistent with the promotion of robust risk management at OCC in several ways. In closing out a defaulted Clearing Member's portfolio, OCC would likely incur costs associated with the liquidation process. OCC's current margin methodology calculates margin requirements designed to cover potential losses due to price movements over a two-day risk horizon. It is not designed, however, to account for liquidation costs that OCC could incur in the process of closing out a defaulted Clearing Member's portfolio. As described above, OCC proposes to adopt a model designed to estimate the margin necessary to cover liquidation costs that OCC could incur when closing out a defaulted Clearing Member's portfolio. Adopting a model that allows for measurement of a risk not captured elsewhere in OCC's margin methodology would provide for more comprehensive management of OCC's risks in managing a Clearing Member default.

Moreover, the Commission believes that the inclusion of concentration charges in the proposed liquidation cost model would also be consistent with the promotion of robust risk management at OCC. The cost of liquidating a defaulted Clearing Member's portfolio is, in part, a function of market prices and market depth present at the time of the Clearing Member's default. The process of liquidating on a compressed timeframe a large or concentrated position during such a period could negatively affect such market prices for OCC. In recognition of such costs, OCC proposes to use concentration factors to scale up both the Vega LCs and Delta LCs based on the size of a defaulted Clearing Member's positions relative to the average daily volume of the financial instruments in the defaulted Clearing Member's portfolio. Including concentration charges in OCC's proposed liquidation cost model would be consistent with the promotion of robust risk management by acknowledging and attempting to address issues of market depth in the model.

In addition, the Commission believes that the use of the proposed liquidation cost model to create a margin floor would be consistent with promoting robust risk management at OCC. OCC's margin methodology may produce a credit for well-hedged portfolios because it is focused on the potential losses resulting from price movements over a two-day risk horizon. OCC could, however, incur costs in the process of closing out a defaulted Clearing Member's portfolio at current prices, rather than prices two days into the future. OCC's proposal acknowledges this potential gap by requiring that a Clearing Member post, at a minimum, margin to cover the liquidation cost of its portfolio. Adopting rules designed to cover costs that OCC may incur in closing out a defaulted Clearing Member's portfolio at current prices, in addition to potential future losses, would be consistent with the promotion of robust risk management at OCC by increasing the likelihood that OCC would have sufficient financial resources to manage the default of a Clearing Member.

Second, the Commission believes that enhancing OCC's ability to manage the default of a Clearing Member through the calculation of liquidation costs and the use of concentration charges to take into account the additional risk posed by large or concentrated positions to OCC would be consistent with the promotion of safety and soundness. The OCC would apply concentration charges to increase the Vega LCs and Delta LCs relative to the size and concentration of positions within a Clearing Member's portfolio. The Commission believes that setting the proposed model as a margin floor would also be consistent with the promotion of safety and soundness. The amendments to the margin model proposed in the Advance Notice should provide OCC with additional resources on which it could rely to manage the potential credit losses arising out of the default of a Clearing Member. By increasing its available financial resources, OCC would decrease the likelihood that a default would exceed OCC's resources and threaten the safety and soundness of OCC's ongoing operations.

Finally, the Commission believes that the proposal is generally consistent with reducing systemic risk and supporting the broader financial system. As discussed above, OCC proposes to identify and manage the potential cost of liquidating a defaulted Clearing Member's portfolio. OCC's estimation of such potential costs would be calibrated based on historical periods of market stress. OCC proposes to collect resources designed to cover such costs in the form of margin. Collecting additional margin to support OCC's ability to close out a default Clearing

[20] 12 U.S.C. 5464(a)(2).

[21] 12 U.S.C. 5464(b).

[22] 12 U.S.C. 5464(c).

[23] 17 CFR 240.17Ad–22. *See* Securities Exchange Act Release No. 68080 (October 22, 2012), 77 FR 66220 (November 2, 2012) (S7–08–11). *See also* Securities Exchange Act Release No. 78961 (September 28, 2016), 81 FR 70786 (October 13, 2016) (S7–03–14) (''Covered Clearing Agency Standards''). The Commission established an effective date of December 12, 2016 and a compliance date of April 11, 2017 for the Covered Clearing Agency Standards. OCC is a ''covered clearing agency'' as defined in Rule 17Ad–22(a)(5).

[24] 17 CFR 240.17Ad–22.

[25] 12 U.S.C. 5464(b).

[26] 17 CFR 240.17Ad–22(e)(6)(i).

Member's portfolio during a period of market stress could reduce the potentiality that OCC would mutualize a loss arising out of the close-out process. While unavoidable under certain circumstances, reducing the potentiality of loss mutualization during periods of market stress could reduce the potential knock-on effects to non-defaulting Clearing Members, their customers and the broader options market arising out of a Clearing Member default. The Commission believes, therefore, that adoption of a liquidation cost model calibrated based on periods of market stress would be consistent with the reduction of systemic risk and supporting the stability of the broader financial system.

Accordingly, and for the reasons stated above, the Commission believes the changes proposed in the Advance Notice are consistent with Section 805(b) of the Clearing Supervision Act.[27]

B. Consistency With Rule 17Ad–22(e)(6)(i) Under the Exchange Act

Rule 17Ad–22(e)(6)(i) under the Exchange Act requires, in part, that a covered clearing agency establish, implement, maintain, and enforce written policies and procedures reasonably designed to cover, if the covered clearing agency provides central counterparty services, its credit exposures to its participants by establishing a risk-based margin system that, at a minimum, considers, and produces margin levels commensurate with, the risks and particular attributes of each relevant product, portfolio, and market.[28]

As described above, the liquidation cost that OCC could incur in the process of closing out a Clearing Member's portfolio is, in part, a function of the spread between the bid and the ask prices of financial instruments within the portfolio. The STANS methodology attempts to address potential losses resulting from changes in price over a two-day period. As described above, however, STANS is not designed to account for liquidation costs. OCC's proposed model would be designed to account for particular attributes of the products in a defaulted Clearing Member's portfolio, including the bid-ask spreads and average daily volume of such products.[29] Further, the proposal would acknowledge the purpose of the proposed liquidation cost model as distinct from the STANS methodology by using the proposed liquidation cost model as a floor on a Clearing Member's margin requirements.

OCC's proposal would be tailored to the particular attributes of products in a Clearing Member's portfolio. As described above, OCC would use the proposed model to calculate two risk-based liquidation costs for each portfolio: (1) The Vega LC and (2) the Delta LC.[30] The Commission believes, therefore, that the adoption of the proposed liquidation cost model designed to produce margin levels commensurate with the risks of liquidating a Clearing Member's portfolio is consistent with Exchange Act Rule 17Ad–22(e)(6)(i).[31]

IV. Conclusion

It is therefore noticed, pursuant to Section 806(e)(1)(I) of the Clearing Supervision Act, that the Commission *does not object* to Advance Notice (SR–OCC–2019–802) and that OCC is *authorized* to implement the proposed change as of the date of this notice or the date of an order by the Commission approving proposed rule change SR–OCC–2019–004, whichever is later.

By the Commission.

Eduardo A. Aleman,

Deputy Secretary.

[FR Doc. 2019–12884 Filed 6–17–19; 8:45 am]

BILLING CODE 8011–01–P

[27] 12 U.S.C. 5464(b).

[28] 17 CFR 240.17Ad–22(e)(6)(i).

[29] As noted above, OCC proposes to incorporate the proposed model into its margin methodology documentation and to reference the margin add-on in its Margin Policy.

[30] Options products would incur both a Vega LC and a Delta LC, while Delta-one products such as futures contracts, Treasury securities, and equity securities would incur only a Delta LC.

[31] 17 CFR 240.17Ad–22(e)(6)(i).

SECURITIES AND EXCHANGE COMMISSION

[Release No. 34–86091; File No. SR–FINRA–2019–012]

Self-Regulatory Organizations; Financial Industry Regulatory Authority, Inc.; Notice of Designation of a Longer Period for Commission Action on a Proposed Rule Change To Amend FINRA Rule 5110 (Corporate Financing Rule—Underwriting Terms and Arrangements) To Make Substantive, Organizational and Terminology Changes

June 12, 2019.

On April 11, 2019, Financial Industry Regulatory Authority, Inc. (''FINRA'') filed with the Securities and Exchange Commission (''Commission''), pursuant to Section 19(b)(1) of the Securities Exchange Act of 1934 (''Act'')[1] and Rule 19b–4 thereunder,[2] a proposed rule change to amend FINRA Rule 5110 (Corporate Financing Rule—Underwriting Terms and Arrangements) (the ''Rule'') to make substantive, organizational and terminology changes to the Rule. The proposed rule change was published for comment in the **Federal Register** on May 1, 2019.[3] The Commission has received six comment letters on the proposal.[4]

Section 19(b)(2) of the Act[5] provides that, within 45 days of publication of notice of the filing of a proposed rule change, or within such longer period up to 90 days as the Commission may designate if it find such longer period to be appropriate and publishes its reasons for so finding, or as to which the self-regulatory organization consents, the Commission shall either approve the proposed rule change, disapprove the proposed rule change, or institute proceedings to determine whether the proposed rule change should be disapproved. The 45th day after publication of the notice for this proposed rule change is June 15, 2019. The Commission is extending this 45-day time period.

The Commission finds it appropriate to designate a longer period within which to take action on the proposed rule change so that it has sufficient time to consider the proposed rule change.[6]

Accordingly, the Commission, pursuant to Section 19(b)(2) of the Act,[7] designates July 30, 2019, as the date by which the Commission shall either approve or disapprove, or institute proceedings to determine whether to

[1] 15 U.S.C. 78s(b)(1).

[2] 17 CFR 240.19b–4.

[3] *See* Securities Exchange Act Release No. 85715 (April 25, 2019), 84 FR 18592.

[4] *See* Letter from Suzanne Rothwell, Managing Member, Rothwell Consulting LLC, to Secretary, Commission, dated May 14, 2019; letter from Stuart J. Kaswell, Esq., to Vanessa Countryman, Acting Director, Commission, dated May 17, 2019; letter from Eversheds Sutherland (US) LLP, on behalf of the Committee of Annuity Insurers, to Brent J. Fields, Secretary, Commission, dated May 21, 2019; letter from Aseel Rabie, Managing Director and Associate General Counsel, Securities Industry and Financial Markets Association, to Vanessa Countryman, Acting Secretary, Commission, dated May 30, 2019; letter from Robert E. Buckholz, Chair, Federal Regulation of Securities Committee, ABA Business Law Section, American Bar Association, to Vanessa Countryman, Acting Secretary, Commission, dated May 30, 2019; letter from Davis Polk & Wardwell LLP, to Vanessa Countryman, Acting Secretary, Commission, dated June 5, 2019.

[5] 15 U.S.C. 78s(b)(2).

[6] Also, by letter dated June 6, 2019, FINRA consented to extending to July 30, 2019 the time period for Commission action on SR–FINRA–2019–012. *See http://www.finra.org/sites/default/files/rule_filing_file/SR-FINRA-2019-012-Extension1.pdf.*

[7] 15 U.S.C. 78s(b)(2).

disapprove, the proposed rule change (File No. SR–FINRA–2019–012).

For the Commission, by the Division of Trading and Markets, pursuant to delegated authority.[8]

Eduardo A. Aleman,

Deputy Secretary.

[FR Doc. 2019–12785 Filed 6–17–19; 8:45 am]

BILLING CODE 8011–01–P

[8] 17 CFR 200.30–3(a)(31).

SECURITIES AND EXCHANGE COMMISSION

[SEC File No. 270–255, OMB Control No. 3235–0305]

Proposed Collection; Comment Request

Upon Written Request Copies Available From: Securities and Exchange Commission, Office of FOIA Services, 100 F Street NE, Washington, DC 20549–2736.

Extension:
Rule 13e–1

Notice is hereby given that, pursuant to the Paperwork Reduction Act of 1995 (44 U.S.C. 3501 *et seq.*), the Securities and Exchange Commission (''Commission'') is soliciting comments on the collection of information summarized below. The Commission plans to submit this existing collection of information to the Office of Management and Budget for extension and approval.

Rule 13e–1 (17 CFR 240.13e–1) under the Securities Exchange Act of 1934 (15 U.S.C. 78 *et seq.*) makes it unlawful for an issuer who has received notice that it is the subject of a tender offer made under Section 14(d)(1) of the Exchange Act to purchase any of its equity securities during the tender offer, unless it first files a statement with the Commission containing information required by the rule. This rule is in keeping with the Commission's statutory responsibility to prescribe rules and regulations that are necessary for the protection of investors. The information filed under Rule 13e–1 must be filed with the Commission and is publicly available. We estimate that it takes approximately 10 burden hours per response to provide the information required under Rule 13e–1 and that the information is filed by approximately 10 respondents. We estimate that 25% of the 10 hours per response (2.5 hours) is prepared by the company for a total annual reporting burden of 25 hours (2.5 hours per response × 10 responses).

Written comments are invited on: (a) Whether this proposed collection of information is necessary for the proper performance of the functions of the agency, including whether the information will have practical utility; (b) the accuracy of the agency's estimate of the burden imposed by the collection of information; (c) ways to enhance the quality, utility, and clarity of the information collected; and (d) ways to minimize the burden of the collection of information on respondents, including through the use of automated collection techniques or other forms of information technology. Consideration will be given to comments and suggestions submitted in writing within 60 days of this publication.

An agency may not conduct or sponsor, and a person is not required to respond to, a collection of information unless it displays a currently valid control number.

Please direct your written comment to Charles Riddle, Acting Director/Chief Information Officer, Securities and Exchange Commission, c/o Candace Kenner, 100 F Street NE, Washington, DC 20549 or send an email to: *PRA_Mailbox@sec.gov.*

Dated: June 13, 2019.

Eduardo A. Aleman,

Deputy Secretary.

[FR Doc. 2019–12890 Filed 6–17–19; 8:45 am]

BILLING CODE 8011–01–P

SECURITIES AND EXCHANGE COMMISSION

[SEC File No. 270–069, OMB Control No. 3235–0069]

Proposed Collection; Comment Request

Upon Written Request, Copies Available From: Securities and Exchange Commission, Office of FOIA Services, 100 F Street NE, Washington, DC 20549–2736.

Extension:
Industry Guides

Notice is hereby given that, pursuant to the Paperwork Reduction Act of 1995 (44 U.S.C. 3501 *et seq.*), the Securities and Exchange Commission (''Commission'') is soliciting comments on the collection of information summarized below. The Commission plans to submit this existing collection of information to the Office of Management and Budget for extension and approval.

Industry Guides are used by registrants in certain industries as disclosure guidelines to be followed in presenting information to investors in Securities Act (15 U.S.C. 77a *et seq.*) and Exchange Act (15 U.S.C. 78a *et seq.*) registration statements and certain other Exchange Act filings. The paperwork burden from the Industry Guides is imposed through the forms that are subject to the disclosure requirements in the Industry Guides and is reflected in the analysis of these documents. To avoid a Paperwork Reduction Act inventory reflecting duplicative burdens, for administrative convenience the Commission estimates the total annual burden imposed by the Industry Guides to be one hour.

Written comments are invited on: (a) Whether this proposed collection of information is necessary for the proper performance of the functions of the agency, including whether the information will have practical utility; (b) the accuracy of the agency's estimate of the burden imposed by the collection of information; (c) ways to enhance the quality, utility, and clarity of the information collected; and (d) ways to minimize the burden of the collection of information on respondents, including through the use of automated collection techniques or other forms of information technology. Consideration will be given to comments and suggestions submitted in writing within 60 days of this publication.

An agency may not conduct or sponsor, and a person is not required to respond to, a collection of information unless it displays a currently valid control number.

Please direct your written comment to Charles Riddle, Acting Director/Chief Information Officer, Securities and Exchange Commission, c/o Remi Pavlik-Simon, 100 F Street NE, Washington, DC 20549 or send an email to: *PRA_Mailbox@sec.gov.*

Dated: June 13, 2019.

Eduardo A. Aleman,

Deputy Secretary.

[FR Doc. 2019–12888 Filed 6–17–19; 8:45 am]

BILLING CODE 8011–01–P

SECURITIES AND EXCHANGE COMMISSION

[Release No. 34–86092; File No. SR–ICEEU–2019–008]

Self-Regulatory Organizations; ICE Clear Europe Limited; Notice of Filing and Immediate Effectiveness of Proposed Rule Change Relating to Publication of a Circular Regarding the Interpretation of References to EU Legislation in the Clearing Rules Post-Brexit

June 12, 2019.

Pursuant to Section 19(b)(1) of the Securities Exchange Act of 1934

(''Act''),[1] and Rule 19b–4 thereunder,[2] notice is hereby given that on May 31, 2019, ICE Clear Europe Limited (''ICE Clear Europe'' or the ''Clearing House'') filed with the Securities and Exchange Commission (''Commission'') the proposed rule changes described in Items I, II, and III below, which Items have been primarily prepared by ICE Clear Europe. ICE Clear Europe filed the proposed rule change pursuant to Section 19(b)(3)(A) of the Act[3] and Rule 19b–4(f)(1) thereunder,[4] so that the proposal was immediately effective upon filing with the Commission. The Commission is publishing this notice to solicit comments on the proposed rule change from interested persons.

I. Clearing Agency's Statement of the Terms of Substance of the Proposed Rule Change

ICE Clear Europe is proposing to publish a Circular, titled ICE Clear Europe: Interpretation of References to EU Legislation in the Clearing Rules Post-Brexit (the ''Circular''), to provide guidance as to the interpretation of references to European Union (''EU'') directives and regulations in the ICE Clear Europe Clearing Rules and Procedures in the event that the United Kingdom (''UK'') ceases to be an EU member state, in circumstances where no withdrawal agreement stipulating that EU laws will continue to apply in the UK has been agreed between the UK and the EU–27. The interpretation contained in the Circular will only apply under such circumstances.

II. Clearing Agency's Statement of the Purpose of, and Statutory Basis for, the Proposed Rule Change

In its filing with the Commission, ICE Clear Europe included statements concerning the purpose of and basis for the proposed rule change and discussed any comments it received on the proposed rule change. The text of these statements may be examined at the places specified in Item IV below. ICE Clear Europe has prepared summaries, set forth in sections (A), (B), and (C) below, of the most significant aspects of such statements.

(A) Clearing Agency's Statement of the Purpose of, and Statutory Basis for, the Proposed Rule Change

(a) Purpose

The purpose of the proposed Circular is to provide guidance with respect to the interpretation of certain provisions in the Rules and Procedures in the event that the UK ceases to be an EU member state, in circumstances where no withdrawal agreement has been agreed between the UK and the EU–27 stipulating that EU laws will continue to apply in the UK. In such circumstances, directly applicable EU directives and regulations will be incorporated into UK law with modifications on ''exit day'' through the European Union (Withdrawal) Act 2018 (the ''EUWA''), which would result in there being two versions of a directly applicable EU legislative act which may be applicable to the Rules: (1) The version as enacted in the EU, directly applicable throughout the EU (and, in certain cases, the EEA); and (2) the version incorporated into UK law (referred to as ''on-shored'').

There are various references to EU directives and regulations in the Rules and Procedures; others may arise by implication by virtue of definitions such as that of ''Applicable Laws'' or ''Governmental Authority'' (Rule 101). ICE Clear Europe is proposing to publish the Circular to provide guidance as to the proper interpretation of such references in the event of the UK leaving the EU without withdrawal agreement that provides for continued applicability of EU law in the UK. The guidance is intended to be consistent with the views of legal practitioners in the UK with respect to references to EU directives and regulations in English law contracts generally, but applied to the particular definitions and situations that arise under the Rules and Procedures.

The Circular sets out several principles that will be applied by ICE Clear Europe when interpreting references to an EU regulation or directive in its Rules:

1. Where the reference concerns an obligation on, or otherwise applies to, the Clearing House or a UK Clearing Member:

○ Where the reference is to an EU regulation, it should be interpreted as the regulation as it forms part of UK domestic law through section 3 of the EUWA, and as amended by UK law from time to time; and

○ Where the reference is to an EU directive, it should be interpreted as the UK domestic law corresponding to the directive or provision thereof.

2. Where the reference concerns an obligation on, or otherwise applies to, an EU Clearing Member:

○ Where the reference is to an EU regulation, it should be interpreted as the regulation as it applies in the EU, and as amended by EU law from time to time; and

○ Where the reference is to an EU directive, it should be interpreted as the EU directive, as amended by EU law from time to time and as implemented in the relevant member state of the EU Clearing Member.

The Circular also addresses situations where both sets of laws apply, for example for entities established in the UK with an EU branch (or vice versa) or which continue to be regulated in both systems under cross-border licenses, the UK temporary permissions regime or other grandfathering arrangements. By way of example, it explains how Rule requirements that Clearing Members maintain sufficient capital and segregated accounts would require UK Clearing Members to comply with the on-shored version of the applicable regulatory requirements, while EU Clearing Members would be required to comply with the existing EU regulations.

The Circular further sets out certain exceptions to these general principles relating to the following:

- A reference to an EU law relating to emission allowance units issued under the EU Emissions Trading Scheme should be interpreted to continue to refer to the EU law since the UK no longer participates in the scheme;
- References to EU member state laws transposing or implementing an EU directive will be read to include UK laws corresponding to that EU directive;
- Certain references relating to the European Market Infrastructure Regulation (Regulation (EU) No 648/2012) and related EU authorities will be read to continue to refer to relevant EU law and authorities, for example in the context of ICE Clear Europe's status as a third country central counterparty thereunder; and
- References relating to EU data protection legislation are excluded, since these are addressed separately in ICE Clear Europe Circular C19/053 dated March 15, 2019.

(b) Statutory Basis

ICE Clear Europe believes that the proposed rule change is consistent with the requirements of Section 17A of the Act[5] and the regulations thereunder applicable to it, including the standards under Rule 17Ad–22.[6] In particular, Section 17A(b)(3)(F) of the Act[7] requires, among other things, that the rules of a clearing agency be designed to promote the prompt and accurate clearance and settlement of securities transactions and, to the extent

[1] 15 U.S.C. 78s(b)(1).
[2] 17 CFR 240.19b–4.
[3] 15 U.S.C. 78s(b)(3)(A).
[4] 17 CFR 240.19b–4(f)(1).
[5] 15 U.S.C. 78q–1.
[6] 17 CFR 240.17Ad–22.
[7] 15 U.S.C. 78q–1(b)(3)(F).

applicable, derivative agreements, contracts, and transactions, the safeguarding of securities and funds in the custody or control of the clearing agency or for which it is responsible, and the protection of investors and the public interest. The proposed Circular would provide guidance with respect to the interpretation of the Rules that would apply to EU and UK Clearing Members and ICE Clear Europe upon the UK departure from the EU if there is no withdrawal agreement that provides for EU law to continue to apply in the UK. The interpretation would thus facilitate continued clearing by EU and UK Clearing Members in compliance with applicable law in relevant jurisdictions and promote the prompt and accurate clearance and settlement of transactions by such persons. As such, the interpretation is consistent with the safeguarding of securities and funds in the custody or control of the Clearing House or for which it is responsible, the protection of investors and the public interest.

Moreover, the interpretation is consistent with Rule 17Ad–22(e)(1),[8] which requires that each covered clearing agency establish, implement, maintain and enforce written policies and procedures reasonably designed to provide for a well-founded, clear, transparent, and enforceable legal basis for each aspect of its activities in all relevant jurisdictions. As discussed herein, the interpretation is designed to ensure that references to EU legislation in the Rules and Procedures are properly interpreted should the UK cease to be an EU member state with no withdrawal agreement stipulating that EU laws will continue to apply in the UK. The guidance set out in the Circular would facilitate continued clearing in light of the requirements of UK and EU law in those circumstances and would minimize the potential for disputes and legal uncertainty. ICE Clear Europe does not expect that the interpretation will adversely impact its ability to comply with the Act or any standards under Rule 17Ad–22.[9]

(B) Clearing Agency's Statement on Burden on Competition

ICE Clear Europe does not believe the proposed guidance in the Circular would have any impact, or impose any burden, on competition not necessary or appropriate in furtherance of the purpose of the Act. The guidance is will not change the substantive requirements of any Rules or Procedures but will clarify the proper interpretation of references to EU legislation in order to facilitate that the Clearing House and EU and UK Clearing Members continue to adhere to applicable laws and regulations. ICE Clear Europe does not believe the interpretation will in itself materially affect the cost of, or access to, clearing. As a result, ICE Clear Europe does not believe the proposed the rule change imposes any burden on competition that is inappropriate in furtherance of the purposes of the Act.

(C) Clearing Agency's Statement on Comments on the Proposed Rule Change Received From Members, Participants or Others

Written comments relating to the proposed amendments have not been solicited or received by ICE Clear Europe. ICE Clear Europe will notify the Commission of any comments received with respect to the proposed rule change.

III. Date of Effectiveness of the Proposed Rule Change and Timing for Commission Action

The foregoing rule change has become effective pursuant to Section 19(b)(3)(A) of the Act [10] and paragraph (f) of Rule 19b–4 [11] thereunder. At any time within 60 days of the filing of the proposed rule change, the Commission summarily may temporarily suspend such rule change if it appears to the Commission that such action is necessary or appropriate in the public interest, for the protection of investors, or otherwise in furtherance of the purposes of the Act.

IV. Solicitation of Comments

Interested persons are invited to submit written data, views, and arguments concerning the foregoing, including whether the proposed rule change is consistent with the Act. Comments may be submitted by any of the following methods:

Electronic Comments

- Use the Commission's internet comment form (*http://www.sec.gov/rules/sro.shtml*) or
- Send an email to *rule-comments@sec.gov.* Please include File Number SR–ICEEU–2019–008 on the subject line.

Paper Comments

- Send paper comments in triplicate to Secretary, Securities and Exchange Commission, 100 F Street NE, Washington, DC 20549–1090.

All submissions should refer to File Number SR–ICEEU–2019–008. This file number should be included on the subject line if email is used. To help the Commission process and review your comments more efficiently, please use only one method. The Commission will post all comments on the Commission's internet website (*http://www.sec.gov/rules/sro.shtml*). Copies of the submission, all subsequent amendments, all written statements with respect to the proposed rule change that are filed with the Commission, and all written communications relating to the proposed rule change between the Commission and any person, other than those that may be withheld from the public in accordance with the provisions of 5 U.S.C. 552, will be available for website viewing and printing in the Commission's Public Reference Section, 100 F Street NE, Washington, DC 20549, on official business days between the hours of 10:00 a.m. and 3:00 p.m. Copies of such filings will also be available for inspection and copying at the principal office of ICE Clear Europe and on ICE Clear Europe's website at *https://www.theice.com/clear-europe/regulation.*

All comments received will be posted without change. Persons submitting comments are cautioned that we do not redact or edit personal identifying information from comment submissions. You should submit only information that you wish to make available publicly. All submissions should refer to File Number SR–ICEEU–2019–008 and should be submitted on or before July 9, 2019.

For the Commission, by the Division of Trading and Markets, pursuant to delegated authority.[12]

Eduardo A. Aleman,

Deputy Secretary.

[FR Doc. 2019–12786 Filed 6–17–19; 8:45 am]

BILLING CODE 8011–01–P

[8] 17 CFR 240.17Ad–22(e)(1).

[9] 17 CFR 240.17Ad–22.

[10] 15 U.S.C. 78s(b)(3)(A).

[11] 17 CFR 240.19b–4(f).

[12] 17 CFR 200.30–3(a)(12).

SECURITIES AND EXCHANGE COMMISSION

[Investment Company Act Release No. 33505; File No. 812–15000]

Vertical Capital Income Fund and Oakline Advisors, LLC

June 12, 2019.

AGENCY: Securities and Exchange Commission (''Commission'').

ACTION: Notice.

Notice of an application under section 6(c) of the Investment Company Act of 1940 (''Act'') for an exemption from section 19(b) of the Act and rule 19b–

1 under the Act to permit a registered closed-end investment company to make periodic distributions of long-term capital gains more frequently than permitted by section 19(b) or rule 19b–1.

APPLICANTS: Vertical Capital Income Fund (the ''Fund''), a diversified closed-end investment company registered under the Act and organized as a statutory trust under the laws of Delaware, and Oakline Advisors, LLC (''Oakline'') (together with the Fund, the ''Applicants''), registered under the Investment Advisers Act of 1940, organized as a limited liability company under the laws of Delaware, and serving as investment adviser to the Fund.[1]

FILING DATES: The application was filed on February 5, 2019, and amended on May 28, 2019.

HEARING OR NOTIFICATION OF HEARING: An order granting the application will be issued unless the Commission orders a hearing. Interested persons may request a hearing by writing to the Commission's Secretary and serving applicants with a copy of the request, personally or by mail. Hearing requests should be received by the Commission by 5:30 p.m. on July 8, 2019, and should be accompanied by proof of service on applicants, in the form of an affidavit or, for lawyers, a certificate of service. Pursuant to Rule 0–5 under the Act, hearing requests should state the nature of the writer's interest, any facts bearing upon the desirability of a hearing on the matter, the reason for the request, and the issues contested. Persons who wish to be notified of a hearing may request notification by writing to the Commission's Secretary.

ADDRESSES: The Commission: Secretary, U.S. Securities and Exchange Commission, 100 F Street NE, Washington, DC 20549–1090. Applicants: c/o JoAnn Strasser, Thompson Hine LLP, 41 S. High St., 17th Floor, Columbus, OH 43215, and Stanton Eigenbrodt, Executive Vice President, Chief Legal Officer, Chief Compliance Officer and Secretary, Oakline Advisors, LLC, 14675 Dallas Parkway, Suite 600, Dallas, TX 75254.

[1] Applicants request that the order also apply to each other registered closed-end investment company advised or to be advised in the future by Oakline or by an entity controlling, controlled by, or under common control (within the meaning of section 2(a)(9) of the Act) with Oakline (including any successor in interest) (each such entity, including Oakline, an ''Adviser'') that in the future seeks to rely on the order (such investment companies, together with the Fund, are collectively the ''Funds'' and, individually, a ''Fund''). A successor in interest is limited to entities that result from a reorganization into another jurisdiction or a change in the type of business organization.

FOR FURTHER INFORMATION CONTACT: Laura L. Solomon, Senior Counsel at (202) 551–6915, or Kaitlin C. Bottock, Branch Chief, at (202) 551–6825 (Division of Investment Management, Chief Counsel's Office).

SUPPLEMENTARY INFORMATION: The following is a summary of the application. The complete application may be obtained via the Commission's website by searching for the file number, or for an applicant using the Company name box, at *http://www.sec.gov/search/search.htm,* or by calling (202) 551–8090.

Summary of the Application

1. Section 19(b) of the Act generally makes it unlawful for any registered investment company to make long-term capital gains distributions more than once every twelve months. Rule 19b–1 under the Act limits to one the number of capital gain dividends, as defined in section 852(b)(3)(C) of the Internal Revenue Code of 1986 (''Code,'' and such dividends, ''distributions''), that a registered investment company may make with respect to any one taxable year, plus a supplemental distribution made pursuant to section 855 of the Code not exceeding 10% of the total amount distributed for the year, plus one additional capital gain dividend made in whole or in part to avoid the excise tax under section 4982 of the Code.

2. Applicants believe that investors in certain closed-end funds may prefer an investment vehicle that provides regular current income through a fixed distribution policy (''Distribution Policy''). Applicants propose that the Fund be permitted to adopt a Distribution Policy, pursuant to which the Fund would distribute periodically to its stockholders a fixed percentage of the market price of the Fund's common stock at a particular point in time or a fixed percentage of net asset value (''NAV'') at a particular time or a fixed amount per share of common stock, any of which may be adjusted from time to time.

3. Applicants request an order under section 6(c) of the Act granting an exemption from section 19(b) of the Act and rule 19b-1 to permit a Fund to distribute periodic capital gain dividends (as defined in section 852(b)(3)(C) of the Code) as frequently as twelve times in any one taxable year in respect of its common stock and as often as specified by, or determined in accordance with the terms of, any preferred stock issued by the Fund. Section 6(c) of the Act provides, in relevant part, that the Commission may exempt any person or transaction from any provision of the Act to the extent that such exemption is necessary or appropriate in the public interest and consistent with the protection of investors and the purposes fairly intended by the policy and provisions of the Act.

4. Applicants state that any order granting the requested relief will be subject to the terms and conditions stated in the application, which generally are designed to address the concerns underlying section 19(b) and rule 19b-1, including concerns about proper disclosures and shareholders' understanding of the source(s) of a Fund's distributions and concerns about improper sales practices. Among other things, such terms and conditions require that (1) the board of directors or trustees of the Fund (the ''Board'') review such information as is reasonably necessary to make an informed determination of whether to adopt the proposed Distribution Policy and that the Board periodically review the amount of the distributions in light of the investment experience of the Fund, and (2) that the Fund's shareholders receive appropriate disclosures concerning the distributions.

For the Commission, by the Division of Investment Management, under delegated authority.

Eduardo A. Aleman,

Deputy Secretary.

[FR Doc. 2019–12779 Filed 6–17–19; 8:45 am]

BILLING CODE 8011–01–P

SECURITIES AND EXCHANGE COMMISSION

[Investment Company Act Release No. 33508; File No. 812–14968]

Axonic Alternative Income Fund and Axonic Capital LLC

June 13, 2019.

AGENCY: Securities and Exchange Commission (the ''Commission'').

ACTION: Notice.

Notice of an application for an order pursuant to section 6(c) of the Investment Company Act of 1940 (the ''1940 Act'') for an exemption from sections 18(a)(2), 18(c), and 18(i) of the 1940 Act, pursuant to section 6(c) and 23(c) of the 1940 Act for an exemption from rule 23c–3 under the 1940 Act, and for an order pursuant to section 17(d) of, and rule 17d–1 under, the 1940 Act.

SUMMARY OF APPLICATION: Applicants request an order to permit certain registered closed-end management investment companies to issue multiple

classes of shares of beneficial interest (''Shares'') and to impose asset-based service and/or distribution fees and early withdrawal charges.

APPLICANTS: Axonic Alternative Income Fund (the ''Initial Fund'') and Axonic Capital LLC (the ''Adviser'').

FILING DATES: The application was filed on October 24, 2018, and amended and restated on March 8, 2019, and June 11, 2019.

HEARING OR NOTIFICATION OF HEARING: An order granting the requested relief will be issued unless the Commission orders a hearing. Interested persons may request a hearing by writing to the Commission's Secretary and serving applicants with a copy of the request, personally or by mail. Hearing requests should be received by the Commission by 5:30 p.m. on July 8, 2019, and should be accompanied by proof of service on applicants, in the form of an affidavit or, for lawyers, a certificate of service. Pursuant to rule 0–5 under the 1940 Act, hearing requests should state the nature of the writer's interest, any facts bearing upon the desirability of a hearing on the matter, the reason for the request, and the issues contested. Persons who wish to be notified of a hearing may request notification by writing to the Commission's Secretary.

ADDRESSES: Secretary, U.S. Securities and Exchange Commission, 100 F Street NE, Washington, DC 20549–1090; Applicants, c/o Jess Saypoff, Esq., Axonic Capital LLC, 390 Park Avenue, 15th Floor, New York, New York 10022, with copies to Douglas P. Dick, Esq. and Stephen T. Cohen, Esq., Dechert LLP, 1900 K Street NW, Washington, DC 20006.

FOR FURTHER INFORMATION CONTACT: Edward J. Rubenstein, Senior Special Counsel, at (202) 551–6854, or Nadya B. Roytblat, Assistant Director, at (202) 551–6825 (Division of Investment Management, Chief Counsel's Office).

SUPPLEMENTARY INFORMATION: The following is a summary of the application. The complete application may be obtained by searching the Commission's website, at *http://www.sec.gov/search/search.htm,* using the application's file number or the applicant's name, or by calling the Commission at (202) 551–8090.

Applicants' Representations

1. The Initial Fund is a newly organized Delaware statutory trust that is registered under the 1940 Act as a closed-end management investment company and classified as a non-diversified investment company. The Initial Fund's investment objective is to seek total return.

2. The Adviser, a Delaware organized limited liability company, is registered as an investment adviser under the Investment Advisers Act of 1940. The Adviser serves as investment adviser to the Initial Fund.

3. The applicants seek an order to permit the Initial Fund to offer investors multiple classes of Shares with varying sales loads and asset-based service and/or distribution fees and to impose early withdrawal charges.

4. Applicants request that the order also apply to any other registered closed-end management investment company that conducts a continuous offering of its shares, existing now or in the future, for which the Adviser, its successors,[1] or any entity controlling, controlled by, or under common control with the Adviser, or its successors, acts as investment adviser, and which provides periodic liquidity with respect to its Shares through tender offers conducted in compliance with either rule 23c–3 under the 1940 Act or rule 13e–4 under the Securities Exchange Act of 1934 (the ''1934 Act'') (each such closed-end management investment company a ''Future Fund'' and, together with the Initial Fund, each a ''Fund,'' and collectively the ''Funds'').[2]

5. The Initial Fund currently issues a single class of Shares (the ''Initial Class Shares''). The Initial Class Shares are currently being offered on a continuous basis pursuant to a registration statement under the Securities Act of 1933 at their net asset value per share. The Initial Fund, as a closed-end management investment company, does not continuously redeem Shares as does an open-end management investment company. Shares of the Initial Fund are not listed on any securities exchange and do not trade on an over-the-counter system. Applicants do not expect that any secondary market will ever develop for the Shares.

6. If the requested relief is granted, the Initial Fund intends to offer multiple classes of Shares, such as the Initial Class Shares and a new Share class (the ''New Class Shares''), or any other classes. Because of the different distribution fees, shareholder services fees, and any other class expenses that may be attributable to the different classes, the net income attributable to, and any dividends payable on, each class of Shares may differ from each other from time to time.

7. Applicants state that, from time to time, the Board of a Fund may create and offer additional classes of Shares, or may vary the characteristics described of the Initial Class and New Class Shares, including without limitation, in the following respects: (1) The amount of fees permitted by a distribution and service plan as to such class; (2) voting rights with respect to a distribution and service plan as to such class; (3) different class designations; (4) the impact of any class expenses directly attributable to a particular class of Shares allocated on a class basis as described in the application; (5) differences in any dividends and net asset values per Share resulting from differences in fees under a distribution and service plan or in class expenses; (6) any early withdrawal charge or other sales load structure; and (7) any exchange or conversion features, as permitted under the 1940 Act.

8. Applicants state that, in order to provide some liquidity to shareholders, the Initial Fund is structured as an ''interval fund'' and makes quarterly offers to repurchase between five percent and twenty-five percent of its outstanding Shares at net asset value, pursuant to rule 23c–3 under the 1940 Act, unless such offer is suspended or postponed in accordance with regulatory requirements. Any other investment company that intends to rely on the requested relief will provide periodic liquidity to shareholders in accordance with either rule 23c–3 under the 1940 Act or rule 13e–4 under the 1934 Act.

9. Applicants represent that any asset-based distribution and servicing fee of a Fund will comply with the provisions of Rule 2341 of the Rules of the Financial Industry Regulatory Authority (''FINRA Rule 2341'').[3] Applicants also represent that each Fund will disclose in its prospectus the fees, expenses, and other characteristics of each class of Shares offered for sale by the prospectus, as is required for open-end, multiple class funds under Form N–1A. As if it were an open-end management investment company, each Fund will disclose fund expenses borne by shareholders during the reporting period in shareholder reports,[4] and describe in its prospectus any arrangements that result in

[1] A successor in interest is limited to an entity that results from a reorganization into another jurisdiction or a change in the type of business organization.

[2] The Initial Fund and any Future Fund relying on the requested relief will do so in a manner consistent with the terms and conditions of the application. Applicants represent that any person presently intending to rely on the requested relief is listed as an applicant.

[3] Any references to FINRA Rule 2341 include any successor or replacement rule that may be adopted by FINRA.

[4] Shareholder Reports and Quarterly Portfolio Disclosure of Registered Management Investment Companies, Investment Company Act Release No. 26372 (Feb. 27, 2004) (adopting release).

breakpoints in, or elimination of, sales loads.[5] In addition, applicants will comply with applicable enhanced fee disclosure requirements for fund of funds, including registered funds of hedge and private equity funds.[6]

10. Each Fund and its distributor (the ''Distributor'') will also comply with any requirements that may be adopted by the Commission or FINRA regarding disclosure at the point of sale and in transaction confirmations about the costs and conflicts of interest arising out of the distribution of open-end management investment company shares, and regarding prospectus disclosure of sales loads and revenue sharing arrangements as if those requirements apply to the Fund and the Distributor. Each Fund or the Distributor will contractually require that any other distributor of the Fund's Shares comply with such requirements in connection with the distribution of Shares of the Fund.

11. All expenses incurred by a Fund will be allocated among its various classes of Shares based on the net assets of the Fund attributable to each class, except that the net asset value and expenses of each class will reflect the expenses associated with the distribution and service plan of that class (if any), shareholder services fees attributable to a particular class (including transfer agency fees, if any), and any other incremental expenses of that class. Expenses of a Fund allocated to a particular class of the Fund's Shares will be borne on a pro rata basis by each outstanding Share of that class. Applicants state that each Fund will comply with the provisions of rule 18f–3 under the 1940 Act as if it were an open-end management investment company.

12. Applicants state that the Initial Fund does not intend to offer any exchange privilege or conversion feature, but any such privilege or feature introduced in the future by a Fund will comply with rule 11a–1, rule 11a–3, and rule 18f–3 as if the Fund were an open-end management investment company.

13. Applicants state that the Initial Fund does not currently impose, nor does it currently intend to impose, an early withdrawal charge. In the future, however, a Fund may impose an early withdrawal charge on shares submitted for repurchase that have been held less than a specified period. Each Fund may waive the early withdrawal charges on repurchases for certain categories of shareholders or transactions to be established from time to time. Applicants state that each Fund will apply the early withdrawal charge (and any waivers or scheduled variations of the early withdrawal charge) uniformly to all shareholders in a given class and consistently with the requirements of rule 22d–1 under the 1940 Act as if the Fund were an open-end management investment company.

14. The Initial Fund, operating as an interval fund pursuant to rule 23c–3 under the 1940 Act, does not presently intend to, but a Fund (including the Initial Fund in the future) may, offer its shareholders an exchange feature under which the shareholders of the Fund may, in connection with the Fund's periodic repurchase offers, exchange their Shares of the Fund for shares of the same class of (i) registered open-end management investment companies or (ii) other registered closed-end investment companies that comply with rule 23c–3 under the 1940 Act and continuously offer their shares at net asset value, that are in the Fund's group of investment companies (collectively, the ''Other Funds''). Shares of a Fund operating pursuant to rule 23c–3 that are exchanged for shares of Other Funds will be included as part of the repurchase offer amount for such Fund as specified in rule 23c–3 under the 1940 Act. Any exchange option will comply with rule 11a–3 under the 1940 Act, as if the Fund were an open-end management investment company subject to rule 11a–3. In complying with rule 11a–3 under the 1940 Act, each Fund will treat an early withdrawal charge as if it were a contingent deferred sales load (a ''CDSL'').[7]

15. Applicants state that the Initial Fund does not currently, nor does it currently intend to, impose a repurchase fee, but may do so in the future.[8] If a Fund charges a repurchase fee, Shares of the Fund will be subject to a repurchase fee at a rate of no greater than two percent of the shareholder's repurchase proceeds if the interval between the date of purchase of the Shares and the valuation date with respect to the repurchase of those Shares is less than one year. Repurchase fees, if charged, will equally apply to all classes of Shares of the Fund, consistent with section 18 of the 1940 Act and rule 18f–3 thereunder. To the extent a Fund determines to waive, impose scheduled variations of, or eliminate a repurchase fee, it will do so consistently with the requirements of rule 22d–1 under the 1940 Act as if the repurchase fee were a CDSL and as if the Fund were a registered open-end management investment company. In addition, the Fund's waiver of, scheduled variation in, or elimination of the repurchase fee will apply uniformly to all shareholders of the Fund regardless of class.

Applicants' Legal Analysis

Multiple Classes of Shares

1. Section 18(a)(2)(A) and (B) makes it unlawful for a registered closed-end management investment company to issue a senior security that is a stock unless (a) immediately after such issuance it will have an asset coverage of at least 200% and (b) provision is made to prohibit the declaration of any distribution upon its common stock, or the purchase of any such common stock, unless in every such case such senior security has at the time of the declaration of any such distribution, or at the time of any such purchase, an asset coverage of at least 200% after deducting the amount of such distribution or purchase price, as the case may be. Applicants state that the creation of multiple classes of Shares of the Funds may violate section 18(a)(2) because the Funds may not meet section 18(a)(2)'s requirements with respect to a class of Shares that may be a senior security.

2. Section 18(c) of the 1940 Act provides, in relevant part, that a registered closed-end management investment company may not issue or sell any senior security which is a stock if immediately thereafter the company will have outstanding more than one class of senior security that is a stock. Applicants state that the creation of multiple classes of Shares of a Fund may be prohibited by section 18(c), as a class may have priority over another class as to payment of dividends because shareholders of different classes would pay different fees and expenses.

3. Section 18(i) of the 1940 Act generally provides that each share of stock issued by a registered management investment company will be a voting stock and have equal voting rights with every other outstanding voting stock. Applicants state that permitting

[5] Disclosure of Breakpoint Discounts by Mutual Funds, Investment Company Act Release No. 26464 (June 7, 2004) (adopting release).

[6] Fund of Funds Investments, Investment Company Act Release Nos. 26198 (Oct. 1, 2003) (proposing release) and 27399 (Jun. 20, 2006) (adopting release). *See also* rules 12d1–1, *et seq.* of the 1940 Act.

[7] A CDSL, assessed by an open-end fund pursuant to Rule 6c–10 under the 1940 Act, is a distribution-related charge payable to the distributor. Pursuant to the requested order, the early withdrawal charge will likewise be a distribution-related charge payable to the distributor as distinguished from a repurchase fee which is payable to a Fund.

[8] Unlike a distribution-related charge, the repurchase fee is payable to the Fund to compensate long-term shareholders for the expenses related to shorter-term investors, in light of the Fund's generally longer-term investment horizons and investment operations.

multiple classes of Shares of a Fund may violate section 18(i) of the 1940 Act because each class would be entitled to exclusive voting rights with respect to matters solely related to that class.

4. Section 6(c) of the 1940 Act provides that the Commission may exempt any person, security, or transaction, or any class or classes of persons, securities, or transactions, from any provision of the 1940 Act, or from any rule or regulation under the 1940 Act, if and to the extent that such exemption is necessary or appropriate in the public interest and consistent with the protection of investors and the purposes fairly intended by the policy and provisions of the 1940 Act. Applicants request an exemption under section 6(c) from sections 18(a)(2), 18(c), and 18(i) to permit the Funds to issue multiple classes of Shares.

5. Applicants submit that the proposed allocation of expenses relating to distribution and voting rights is equitable and will not discriminate against any group or class of shareholders. Applicants submit that the proposed arrangements would permit each Fund to facilitate the distribution of its Shares and provide investors with a broader choice of shareholder options. Applicants assert that the proposed closed-end management investment company multiple class structure does not raise the concerns underlying section 18 of the 1940 Act to any greater degree than open-end management investment companies' multiple class structures that are permitted by rule 18f–3 under the 1940 Act. Applicants state that each Fund will comply with the provisions of rule 18f–3 as if it were an open-end management investment company.

Early Withdrawal Charges

1. Section 23(c) of the 1940 Act provides, in relevant part, that no registered closed-end management investment company shall purchase securities of which it is the issuer, except: (a) On a securities exchange or other open market; (b) pursuant to tenders, after reasonable opportunity to submit tenders given to all holders of securities of the class to be purchased; or (c) under other circumstances as the Commission may permit by rules and regulations or orders for the protection of investors.

2. Rule 23c–3 under the 1940 Act permits an interval fund to make repurchase offers of between five and twenty-five percent of its outstanding shares at net asset value at periodic intervals pursuant to a fundamental policy of the interval fund. Rule 23c–3(b)(1) under the 1940 Act permits an interval fund to deduct from repurchase proceeds only a repurchase fee, not to exceed two percent of the proceeds, that is paid to the interval fund and is reasonably intended to compensate the fund for expenses directly related to the repurchase.

3. Section 23(c)(3) of the 1940 Act provides that the Commission may issue an order that would permit a closed-end management investment company to repurchase its shares in circumstances in which the repurchase is made in a manner or on a basis that does not unfairly discriminate against any holders of the class or classes of securities to be purchased.

4. Applicants request relief under section 6(c), discussed above, and section 23(c)(3) from rule 23c–3 to the extent necessary for each Fund to impose early withdrawal charges on shares of the Fund submitted for repurchase that have been held for less than a specified period.

5. Applicants state that the early withdrawal charges they intend to impose are functionally similar to CDSLs imposed by open-end management investment companies under rule 6c–10 under the 1940 Act. Rule 6c–10 permits open-end management investment companies to impose CDSLs, subject to certain conditions. Applicants note that rule 6c–10 is grounded in policy considerations supporting the employment of CDSLs where there are adequate safeguards for the investor. Applicants state that these same policy considerations support imposition of early withdrawal charges in the interval fund context, and are a solid basis for the Commission to grant exemptive relief to permit interval funds to impose early withdrawal charges. In addition, applicants state that early withdrawal charges may be necessary for the Fund's Distributor to recover distribution costs from shareholders who exit their investments early. Applicants represent that any early withdrawal charge imposed by a Fund will comply with rule 6c–10 under the 1940 Act as if the rule were applicable to closed-end management investment companies. Each Fund will disclose early withdrawal charges in accordance with the requirements of Form N–1A concerning CDSLs.

Asset-Based Service and/or Distribution Fees

1. Section 17(d) of, and rule 17d–1 under, the 1940 Act prohibit an affiliated person of a registered investment company, or an affiliated person of such person, acting as principal, from participating in or effecting any transaction in connection with any joint enterprise or other joint arrangement in which the investment company participates unless the Commission issues an order permitting the transaction. In reviewing applications submitted under section 17(d) and rule 17d–1, the Commission considers whether the participation of the investment company in a joint enterprise or joint arrangement is consistent with the provisions, policies, and purposes of the 1940 Act, and the extent to which the participation is on a basis different from or less advantageous than that of other participants.

2. Rule 17d–3 under the 1940 Act provides an exemption from section 17(d) and rule 17d–1 to permit open-end management investment companies to enter into distribution arrangements pursuant to rule 12b–1 under the 1940 Act. Applicants request an order under section 17(d) of, and rule 17d–1 under, the 1940 Act, to the extent necessary, to permit each Fund to impose asset-based service and/or distribution fees (in a manner similar to rule 12b–1 fees for an open-end management investment company). Applicants have agreed to comply with rules 12b–1 and 17d–3 as if those rules apply to closed-end management investment companies, which they believe will resolve any concerns that might arise in connection with a Fund financing the distribution of its Shares through asset-based service and/or distribution fees.

For the reasons stated above, applicants submit that the exemptions requested under section 6(c) are necessary and appropriate in the public interest and are consistent with the protection of investors and the purposes fairly intended by the policy and provisions of the 1940 Act. Applicants further submit that the relief requested pursuant to section 23(c)(3) will be consistent with the protection of investors and will insure that applicants do not unfairly discriminate against any holders of the class of securities to be purchased. Finally, applicants state that the Funds' imposition of asset-based service and/or distribution fees is consistent with the provisions, policies, and purposes of the 1940 Act and does not involve participation on a basis different from or less advantageous than that of other participants.

Applicants' Condition

Applicants agree that any order granting the requested relief will be subject to the following condition:

Each Fund relying on the requested order will comply with the provisions of rules 6c–10, 12b–1, 17d–3, 18f–3, 22d–1 and, where

applicable, 11a–3 under the 1940 Act, as amended from time to time or replaced, as if those rules applied to closed-end management investment companies, and will comply with FINRA Rule 2341, as amended from time to time, as if that rule applies to all closed-end management investment companies.

For the Commission, by the Division of Investment Management, under delegated authority.

Eduardo A. Aleman,

Deputy Secretary.

[FR Doc. 2019–12883 Filed 6–17–19; 8:45 am]

BILLING CODE 8011–01–P

SECURITIES AND EXCHANGE COMMISSION

[Release No. 34–86095; File No. SR–NASDAQ–2019–049]

Self-Regulatory Organizations; The Nasdaq Stock Market LLC; Notice of Filing of Proposed Rule Change To Amend the Definition of Family Member in Listing Rule 5605(a)(2) for Purposes of the Definition of Independent Director

June 12, 2019.

Pursuant to Section 19(b)(1) of the Securities Exchange Act of 1934 (''Act''),[1] and Rule 19b–4 thereunder,[2] notice is hereby given that on May 29, 2019, The Nasdaq Stock Market LLC (''Nasdaq'' or ''Exchange'') filed with the Securities and Exchange Commission (''SEC'' or ''Commission'') the proposed rule change as described in Items I, II, and III, below, which Items have been prepared by the Exchange. The Commission is publishing this notice to solicit comments on the proposed rule change from interested persons.

I. Self-Regulatory Organization's Statement of the Terms of Substance of the Proposed Rule Change

The Exchange proposes to modify the definition of a ''Family Member'' for purposes of Listing Rule 5605(a)(2).

The text of the proposed rule change is set forth below. Proposed new language is italicized.

The Nasdaq Stock Market Rules

* * * * *

5605. Board of Directors and Committees

(a) Definitions

(1) No change.

(2) ''Independent Director'' means a person other than an Executive Officer or employee of the Company or any other individual having a relationship which, in the opinion of the Company's board of directors, would interfere with the exercise of independent judgment in carrying out the responsibilities of a director. For purposes of this rule, ''Family Member'' means a person's spouse, parents, children,[and] siblings, [whether by blood, marriage or adoption, or anyone residing in] *mothers and fathers-in-law, sons and daughters-in-law, brothers and sisters-in-law, and anyone (other than domestic employees) who shares* such person's home. The following persons shall not be considered independent:

(A)–(G) No change.

* * * * *

The text of the proposed rule change is available on the Exchange's website at *http://nasdaq.cchwallstreet.com,* at the principal office of the Exchange, and at the Commission's Public Reference Room.

II. Self-Regulatory Organization's Statement of the Purpose of, and Statutory Basis for, the Proposed Rule Change

In its filing with the Commission, the Exchange included statements concerning the purpose of and basis for the proposed rule change and discussed any comments it received on the proposed rule change. The text of these statements may be examined at the places specified in Item IV below. The Exchange has prepared summaries, set forth in sections A, B, and C below, of the most significant aspects of such statements.

A. Self-Regulatory Organization's Statement of the Purpose of, and Statutory Basis for, the Proposed Rule Change

1. Purpose

Nasdaq is proposing to modify the definition of a ''Family Member'' for purposes of director independence under Listing Rule 5605(a)(2) to exclude stepchildren by reverting to the language of the rule before it was paraphrased. Currently, the rule provides that ''children . . . by marriage,'' or stepchildren, are considered Family Members. Nasdaq believes this category was added to the definition of a Family Member inadvertently and that such an expansion of the definition is unwarranted.

Rule 5605(a) provides a list of certain relationships that preclude a board from finding that a director is independent. These objective measures provide transparency to investors and companies, facilitate uniform application of the rules, and ease administration. Nasdaq's rules preclude a director from being considered independent if the director has a Family Member who (i) accepted any compensation from the Company in excess of $120,000 during any period of twelve consecutive months within the three years preceding the determination of independence (with certain exceptions);[3] (ii) is, a partner in, or a controlling Shareholder or an Executive Officer of, any organization to which the Company made, or from which the Company received, payments for property or services in the current or any of the past three fiscal years that exceed 5% of the recipient's consolidated gross revenues for that year, or $200,000, whichever is more (with certain exceptions);[4] (iii) is, employed as an Executive Officer of another entity where at any time during the past three years any of the Executive Officers of the Company served on the compensation committee of such other entity;[5] or (iv) is, a current partner of the Company's outside auditor, or was a partner or employee of the Company's outside auditor who worked on the Company's audit at any time during any of the past three years.[6] Nasdaq's rules also preclude a director from being considered independent if such director is a Family Member of an individual who is, or at any time during the past three years was, employed by the Company as an Executive Officer.[7]

Currently, for purposes of Nasdaq Rules, Family Member means a person's spouse, parents, children and siblings, whether by blood, marriage or adoption, or anyone residing in such person's home.[8] This definition includes stepchildren, as they are ''children by . . . marriage.''

When Nasdaq first adopted this rule in 1999, Family Member was defined as a person's spouse, parents, children, siblings, mother-in-law, father-in-law, brother-in-law, sister-in-law, and anyone who resides in such person's home.[9] The rule was subsequently amended to include sons-in-law and daughters-in-law in the definition of a Family Member.[10] At that point, the New York Stock Exchange's (''NYSE'') definition of an ''immediate family

[1] 15 U.S.C. 78s(b)(1).

[2] 17 CFR 240.19b–4.

[3] Listing Rule 5605(a)(2)(B).

[4] Listing Rule 5605(a)(2)(D).

[5] Listing *Rule* 5605(a)(2)(E).

[6] Listing Rule 5605(a)(2)(F).

[7] Listing Rule 5605(a)(2)(C).

[8] Listing Rule 5605(a)(2).

[9] *See* Securities Exchange Act Release No. 41982 (October 6, 1999), 64 FR 55510 (October 13, 1999).

[10] *See* Securities Exchange Act Release No. 42231 (December 14, 1999), 64 FR 71523 (December 21, 1999).

member,'' which is still in effect, and Nasdaq's definition of the Family Member became nearly identical.[11]

In 2002, Nasdaq undertook a comprehensive review of its corporate governance rules and adopted a package of corporate governance reforms.[12] At about the same time, NYSE implemented similar changes to its listing standards.[13] The Commission discussed and approved both the Nasdaq Independent Director Proposal and the NYSE Corporate Governance Proposal in one order (the ''Order'').[14]

As part of the Nasdaq Independent Director Proposal, Nasdaq changed the definition of Family Member to mean ''a person's spouse, parents, children and siblings, whether by blood, marriage or adoption, or anyone residing in such person's home.'' This change was meant to simplify the existing definition of a Family Member, while not introducing any substantive changes and Nasdaq did not discuss any potential substantive change to the definition in its rule filing. Similarly, NYSE retained unchanged the definition of the immediate family member in the NYSE Corporate Governance Proposal. In the Order, the Commission reviewed and analyzed both Nasdaq's new definition of the Family Member and the NYSE's existing definition and did not note any potential differences.[15]

Over time, Nasdaq has heard from its listed companies and their legal counsel that the change to the definition of a Family Member did not simplify the application of the rule. Instead, while preparing director and officer questionnaires the companies' legal counsel often need to analyze potential differences in the meaning of Nasdaq's definition of a Family Member and NYSE's definition of an immediate family member. In particular, this burdensome analysis occurs when a company transfers its listing from one national securities exchange to another. In such case, a director may have already filled out an annual questionnaire based on the exchange's definition of a family member, but may need to answer additional questions because the definition of the exchange the listing is transferred to is phrased differently.

In particular, Nasdaq has discovered that the revised definition of a Family Member was broader than the prior version and now inadvertently includes stepchildren of a director because such individuals are ''children . . . by marriage'' even though they are not ''sons-in-law'' or ''daughters-in-law'' or any other category from the old definition. In one situation that Nasdaq observed the director married a person who had an adult child. Because the director never acted in any capacity as a parent of this stepchild, and the stepchild never shared the director's household, the director and stepchild had an attenuated relationship. Accordingly, Nasdaq believes that such a relationship should not preclude a director from being considered independent in all circumstances.

Nasdaq believes that the analysis of the potential differences in the definition of family members is an unnecessary and unintentional burden on listed companies because Nasdaq's current definition of a Family Member was meant to paraphrase the then-existing definition of a Family Member, while not introducing any substantive changes. In addition, as described above, the Commission reviewed and analyzed both Nasdaq's new definition of a Family Member and the NYSE's existing definition of an immediate family member, which is nearly identical to the Nasdaq's old definition of a Family Member, and did not note any potential differences. Accordingly, Nasdaq is proposing to modify the definition of a Family Member for purposes of director independence under Listing Rule 5605(a)(2) to revert to the language of the rule before it was paraphrased.

Nasdaq is also proposing to modify the definition of a ''Family Member'' for purposes of director independence under Listing Rule 5605(a)(2) to exclude domestic employees who share a director's home. Nasdaq believes that the definition of a Family Member should not include a domestic employee who shares a director's home because this definition is intended to capture familial, not commercial, relationships.

Notwithstanding these changes, Nasdaq notes that a company's board must, under the Rule and IM–5605, affirmatively determine that no relationship exists that would interfere with the exercise of independent judgment in carrying out the director's responsibilities. Nasdaq believes that it is appropriate for the board to review a potential relationship between a director and a domestic employee or a child of the director's spouse under such facts and circumstances test.

2. Statutory Basis

The Exchange believes that its proposal is consistent with Section 6(b) of the Act,[16] in general, and furthers the objectives of Section 6(b)(5) of the Act,[17] in particular, in that it is designed to promote just and equitable principles of trade, to remove impediments to and perfect the mechanism of a free and open market and a national market system, and, in general to protect investors and the public interest, by removing the impediments to a free in [sic] open market where a ''bright line'' independence test prohibits some directors from being deemed independent in circumstances where the relationship with a Family Member is attenuated, non-existent, or commercial in nature. Nasdaq also believes that the proposed rule change is designed to remove impediments to and perfect the mechanism of a free and open market by aligning Nasdaq's and NYSE's corporate governance requirements more closely, by contrast to current differently phrased definitions of a Family Member on Nasdaq and an immediate family member on NYSE and inclusion of a domestic employee who shares the director's home in Nasdaq's definition of a Family Member, where such differences pose an unnecessary burden on listed companies.

Specifically, Nasdaq listing rules currently prohibit a director from being deemed independent in certain circumstances by including stepchildren of the directors' spouse [sic] in the definition of a Family Member, as described in more detail above. The rule also prohibits a domestic employee who shares the director's home from being deemed independent by including such employee in the definition of a Family Member.

Independent directors over time became a linchpin in the American corporate governance. It is important for investors to have confidence that individuals serving as independent directors do not have a relationship with the listed company that would impair their independence. As the

[11] Section 303A.02 of the NYSE Listed Company Manual states that ''An ''immediate family member'' includes a person's spouse, parents, children, siblings, mothers and fathers-in-law, sons and daughters-in-law, brothers and sisters-in-law, and anyone (other than domestic employees) who shares such person's home.''

[12] On October 9, 2002, the NASD, through its subsidiary, The Nasdaq Stock Market, Inc., filed with the Commission a proposed rule change to amend NASD Rules to modify requirements relating to board independence and independent committees. *See* Securities Exchange Act Release No. 47516 (March 17, 2003), 68 FR 14451 (March 25, 2003) (SR–NASD–2002–141) (''Nasdaq Independent Director Proposal'').

[13] *See* Securities Exchange Act Release No. 47672 (April 11, 2003) 68 FR 19051 (April 17, 2003) (''NYSE Corporate Governance Proposal'').

[14] *See* Securities Exchange Act Release No. 48745 (November 4, 2003), 68 FR 64154 (November 12, 2003).

[15] *Id.*

[16] 15 U.S.C. 78f(b).

[17] 15 U.S.C. 78f(b)(5).

importance of independent directors for listed companies increased, so did the directors' workload and the risk of litigation. In this environment, Nasdaq believes that it is appropriate not to prohibit directors from being considered independent based on certain commercial or attenuated familial relationships, but instead allow the board to review such a relationship and affirmatively determine a relationship exists that would interfere with the exercise of independent judgment in carrying out the director's responsibilities.

Additionally, as proposed, Listing Rule 5605(a)(2) would remain consistent with the SEC Rule 10A–3 promulgated under the Act.[18] In particular, Rule 10A–3(e)(8) provides that a director is no longer considered independent for audit committee service upon, among other things, indirect acceptance of compensatory payments to ''spouses, minor children or stepchildren or children or stepchildren sharing a home with the member.'' Thus, the SEC's audit committee independence rule focuses only on payments to ''minor children or stepchildren'' or ''stepchildren sharing a home with the member'' and would not capture the activities of a stepchild of a director, particularly one who does not nor has ever shared a household. Similarly, Rule 10A–3 does not capture the activities of directors' domestic employees.

Following the proposed rule change, Nasdaq's definition of the Family Member will be became identical with the NYSE's definition of an ''immediate family member,'' the definition that the Commission has previously approved.[19]

B. Self-Regulatory Organization's Statement on Burden on Competition

The Exchange does not believe that the proposed rule change will impose any burden on competition not necessary or appropriate in furtherance of the purposes of the Act. The proposed rule change would eliminate requirements that burden issuers without an offsetting benefit in protecting shareholders. All listed companies would be affected in the same manner by these changes. As such, these changes are neither intended to, nor expected to, impose any burden on competition.

[18] 17 CFR 240.10A–3.

[19] *See* footnote 14, above.

C. Self-Regulatory Organization's Statement on Comments on the Proposed Rule Change Received From Members, Participants, or Others

No written comments were either solicited or received.

III. Date of Effectiveness of the Proposed Rule Change and Timing for Commission Action

Within 45 days of the date of publication of this notice in the **Federal Register** or within such longer period (i) as the Commission may designate up to 90 days of such date if it finds such longer period to be appropriate and publishes its reasons for so finding or (ii) as to which the Exchange consents, the Commission shall: (a) By order approve or disapprove such proposed rule change, or (b) institute proceedings to determine whether the proposed rule change should be disapproved.

IV. Solicitation of Comments

Interested persons are invited to submit written data, views, and arguments concerning the foregoing, including whether the proposed rule change is consistent with the Act. Comments may be submitted by any of the following methods:

Electronic Comments

- Use the Commission's internet comment form (*http://www.sec.gov/rules/sro.shtml);* or
- Send an email to *rule-comments@sec.gov*. Please include File Number SR–NASDAQ–2019–049 on the subject line.

Paper Comments

- Send paper comments in triplicate to Secretary, Securities and Exchange Commission, 100 F Street NE, Washington, DC 20549–1090.

All submissions should refer to File Number *SR–NASDAQ–2019–049.* This file number should be included on the subject line if email is used. To help the Commission process and review your comments more efficiently, please use only one method. The Commission will post all comments on the Commission's internet website (*http://www.sec.gov/rules/sro.shtml).*

Copies of the submission, all subsequent amendments, all written statements with respect to the proposed rule change that are filed with the Commission, and all written communications relating to the proposed rule change between the Commission and any person, other than those that may be withheld from the public in accordance with the provisions of 5 U.S.C. 552, will be available for website viewing and printing in the Commission's Public Reference Room, 100 F Street NE, Washington, DC 20549, on official business days between the hours of 10:00 a.m. and 3:00 p.m. Copies of the filing also will be available for inspection and copying at the principal office of the Exchange. All comments received will be posted without change. Persons submitting comments are cautioned that we do not redact or edit personal identifying information from comment submissions. You should submit only information that you wish to make available publicly.

All submissions should refer to File Number SR–NASDAQ–2019–049 and should be submitted on or before July 9, 2019.

For the Commission, by the Division of Trading and Markets, pursuant to delegated authority.[20]

Eduardo A. Aleman,

Deputy Secretary.

[FR Doc. 2019–12788 Filed 6–17–19; 8:45 am]

BILLING CODE 8011–01–P

[20] 17 CFR 200.30–3(a)(12).

SECURITIES AND EXCHANGE COMMISSION

[SEC File No. 270–339, OMB Control No. 3235–0382]

Proposed Collection; Comment Request

Upon Written Request Copies Available From: Securities and Exchange Commission, Office of FOIA Services, 100 F Street NE, Washington, DC 20549–2736

Extension:
Schedule 14D–9F

Notice is hereby given that, pursuant to the Paperwork Reduction Act of 1995 (44 U.S.C. 3501 *et seq.*), the Securities and Exchange Commission (''Commission'') is soliciting comments on the collection of information summarized below. The Commission plans to submit this existing collection of information to the Office of Management and Budget for extension and approval.

Schedule 14D–9F (17 CFR 240.14d–103) under the Securities Exchange Act of 1934 (15 U.S.C. 78 *et seq.*) is used by any foreign private issuer incorporated or organized under the laws of Canada or by any director or officer of such issuer, where the issuer is the subject of a cash tender or exchange offer for a class of securities filed on Schedule 14D–1F. The information required to be filed with the Commission is intended to permit verification of compliance with the securities law requirements

and assures the public availability of such information. We estimate that Schedule 14D–9F takes approximately 2 hours per response to prepare and is filed by approximately 6 respondents annually for a total reporting burden of 12 hours (2 hours per response x 6 responses).

Written comments are invited on: (a) Whether this proposed collection of information is necessary for the proper performance of the functions of the agency, including whether the information will have practical utility; (b) the accuracy of the agency's estimate of the burden imposed by the collection of information; (c) ways to enhance the quality, utility, and clarity of the information collected; and (d) ways to minimize the burden of the collection of information on respondents, including through the use of automated collection techniques or other forms of information technology. Consideration will be given to comments and suggestions submitted in writing within 60 days of this publication.

An agency may not conduct or sponsor, and a person is not required to respond to, a collection of information unless it displays a currently valid control number.

Please direct your written comment to Charles Riddle, Acting Director/Chief Information Officer, Securities and Exchange Commission, c/o Candace Kenner, 100 F Street NE, Washington, DC 20549 or send an email to: *PRA_Mailbox@sec.gov.*

Dated: June 13, 2019.

Eduardo A. Aleman,

Deputy Secretary.

[FR Doc. 2019–12887 Filed 6–17–19; 8:45 am]

BILLING CODE P

DEPARTMENT OF TRANSPORTATION

Federal Transit Administration

[FTA Docket No. FTA 2019–0007]

Agency Information Collection Activity Under OMB Review

AGENCY: Federal Transit Administration, DOT.

ACTION: Notice of request for comments.

SUMMARY: In compliance with the Paperwork Reduction Act of 1995, this notice announces that the Information Collection Requirements (ICRs) abstracted below have been forwarded to the Office of Management and Budget (OMB) for review and comment. The ICR describe the nature of the information collection and their expected burdens. The **Federal Register** notice with a 60-day comment period soliciting comments on the following collections of information was published on April 2, 2019 (84 FR 1670).

DATES: Comments must be submitted on or before July 18, 2019.

ADDRESSES: All written comments must refer to the docket number that appears at the top of this document and be submitted to the Office of Information and Regulatory Affairs, Office of Management and Budget, 725 17th Street NW, Washington, DC 20503, Attention: FTA Desk Officer. Alternatively, comments may be sent via email to the Office of Information and Regulatory Affairs (OIRA), Office of Management and Budget, at the following address: *oira_submissions@omb.eop.gov.*

FOR FURTHER INFORMATION CONTACT: Tia Swain, Office of Administration, Management Planning Division, 1200 New Jersey Avenue SE, Mail Stop TAD–10, Washington, DC 20590 (202) 366–0354 or *tia.swain@dot.gov.*

SUPPLEMENTARY INFORMATION: The Paperwork Reduction Act of 1995 (PRA), Public Law 104–13, Section 2, 109 Stat. 163 (1995) (codified as revised at 44 U.S.C. 3501–3520), and its implementing regulations, 5 CFR part 1320, require Federal agencies to issue two notices seeking public comment on information collection activities before OMB may approve paperwork packages. 44 U.S.C. 3506, 3507; 5 CFR 1320.5, 1320.8(d)(1), 1320.12. On April 2, 2019, FTA published a 60-day notice (84 FR 12670) in the **Federal Register** soliciting comments on the ICR that the agency was seeking OMB approval. FTA received no comments after issuing this 60-day notice. Accordingly, DOT announces that these information collection activities have been re-evaluated and certified under 5 CFR 1320.5(a) and forwarded to OMB for review and approval pursuant to 5 CFR 1320.12(c).

Before OMB decides whether to approve these proposed collections of information, it must provide 30 days for public comment. 44 U.S.C. 3507(b); 5 CFR 1320.12(d). Federal law requires OMB to approve or disapprove paperwork packages between 30 and 60 days after the 30-day notice is published. 44 U.S.C. 3507 (b)–(c); 5 CFR 1320.12(d); *see also* 60 FR 44978, 44983, Aug. 29, 1995. OMB believes that the 30-day notice informs the regulated community to file relevant comments and affords the agency adequate time to digest public comments before it renders a decision. 60 FR 44983, Aug. 29, 1995. Therefore, respondents should submit their respective comments to OMB within 30 days of publication to best ensure having their full effect. 5 CFR 1320.12(c); *see also* 60 FR 44983, Aug. 29, 1995.

The summaries below describe the nature of the information collection requirements (ICRs) and the expected burden. The requirements are being submitted for clearance by OMB as required by the PRA.

Title: Transit Research, Development, Demonstration and Training Projects.

OMB Control Number: 2132–0546.

Type of Request: Renewal of a previously approved information collection.

Abstract: The Federal Transit Administration's Research, Development, Demonstration, Deployment, Cooperative Research, Technical Assistance, Standards Development, and Human Resources and Training programs are authorized at 49 U.S.C. 5312, 5313, 5314, and 5322 and collectively seek to develop solutions that improve public transportation. Its primary goals are to increase transit ridership, improve safety and emergency preparedness, improve operating efficiencies, protect the environment, promote energy independence, and provide transit research leadership; develop and conduct workforce development activities, training and educational programs for Federal, State, and local transportation employees, United States citizens, and foreign nationals engaged or to be engaged in Government-aid relating to public transportation work; and to sponsor development of voluntary and consensus-based standards to more effectively and efficiently provide transit service, as well as support the improved administration of Federal transit funds. To accomplish this, FTA funds projects to support research and development, demonstration, deployments of various technologies and operational models for transit; a national cooperative research program, a national training institute, national technical assistance centers, and transit workforce development programs.

Respondents: Federal Government Departments, agencies, and instrumentalities of the Government, including Federal laboratories; State and local governmental entities; providers of public transportation; private or non-profit organizations; institutions of higher education; and technical and community colleges.

Estimated Annual Number of Respondents: 175 respondents.

Estimated Total Annual Burden: 20,550 hours.

Frequency: Every two years.

Comments Are Invited On: Whether the proposed collection of information is necessary for the proper performance of the functions of the Department, including whether the information will have practical utility; the accuracy of the Department's estimate of the burden of the proposed information collection; ways to enhance the quality, utility, and clarity of the information to be collected; and ways to minimize the burden of the collection of information on respondents, including the use of automated collection techniques or other forms of information technology. A comment to OMB is best assured of having its full effect if OMB receives it within 30 days of publication of this notice in the **Federal Register**.

Nadine Pembleton,

Director, Office of Management Planning.

[FR Doc. 2019–12808 Filed 6–17–19; 8:45 am]

BILLING CODE P

DEPARTMENT OF TRANSPORTATION

Federal Transit Administration

[FTA Docket No. FTA 2019–0009]

Agency Information Collection Activity Under OMB Review

AGENCY: Federal Transit Administration, DOT.

ACTION: Notice of request for comments.

SUMMARY: In accordance with the Paperwork Reduction Act of 1995, this notice announces the intention of the Federal Transit Administration (FTA) to request the Office of Management and Budget (OMB) to approve the extension of a currently approved information collection:

Public Transportation Emergency Relief Program

DATES: Comments must be submitted before August 19, 2019.

ADDRESSES: To ensure that your comments are not entered more than once into the docket, submit comments identified by the docket number by only one of the following methods:

1. *Website: www.regulations.gov.* Follow the instructions for submitting comments on the U.S. Government electronic docket site. (*Note:* The U.S. Department of Transportation's (DOT's) electronic docket is no longer accepting electronic comments.) All electronic submissions must be made to the U.S. Government electronic docket site at *www.regulations.gov.* Commenters should follow the directions below for mailed and hand-delivered comments.

2. *Fax:* 202–366–7951.

3. *Mail:* U.S. Department of Transportation, 1200 New Jersey Avenue SE, Docket Operations, M–30, West Building, Ground Floor, Room W12–140, Washington, DC 20590–0001.

4. *Hand Delivery:* U.S. Department of Transportation, 1200 New Jersey Avenue SE, Docket Operations, M–30, West Building, Ground Floor, Room W12–140, Washington, DC 20590–0001 between 9:00 a.m. and 5:00 p.m., Monday through Friday, except federal holidays.

Instructions: You must include the agency name and docket number for this notice at the beginning of your comments. Submit two copies of your comments if you submit them by mail. For confirmation that FTA has received your comments, include a self-addressed stamped postcard. Note that all comments received, including any personal information, will be posted and will be available to internet users, without change, to *www.regulations.gov.* You may review DOT's complete Privacy Act Statement in the **Federal Register** published April 11, 2000, (65 FR 19477), or you may visit *www.regulations.gov.* Docket: For access to the docket to read background documents and comments received, go to *www.regulations.gov* at any time. Background documents and comments received may also be viewed at the U.S. Department of Transportation, 1200 New Jersey Avenue SE, Docket Operations, M–30, West Building, Ground Floor, Room W12–140, Washington, DC 20590–0001 between 9:00 a.m. and 5:00 p.m., Monday through Friday, except federal holidays.

FOR FURTHER INFORMATION CONTACT: John Bodnar (202) 366–9091 or email: *john.bodnar@dot.gov.*

SUPPLEMENTARY INFORMATION: Interested parties are invited to send comments regarding any aspect of this information collection, including: (1) The necessity and utility of the information collection for the proper performance of the functions of the FTA; (2) the accuracy of the estimated burden; (3) ways to enhance the quality, utility, and clarity of the collected information; and (4) ways to minimize the collection burden without reducing the quality of the collected information. Comments submitted in response to this notice will be summarized and/or included in the request for OMB approval of this information collection.

Title: Public Transportation Emergency Relief Program (OMB Number: 2132–0575).

Background: Since the authorization of the Public Transportation Emergency Relief Program in 2012, Congress has appropriated funds three times for transit agencies affected by disaster.

The first appropriation of funds for the program was in 2013 following Hurricane Sandy, for which the President declared a major disaster for areas of 12 States and the District of Columbia. Under the Disaster Relief Appropriations Act (Pub. L. 113–2), Congress provided $10.9 billion for FTA's Emergency Relief Program for recovery, relief, and resilience efforts in the counties specified in the disaster declaration. Approximately $10.0 billion remained available after implementation of the Balanced Budget and Emergency Deficit Control Act of 2011 (Pub. L. 112–25) and after intergovernmental transfers to other bureaus and offices within DOT. FTA has allocated the full amount in multiple tiers for response, recovery and rebuilding; for locally prioritized resilience projects, and for competitively selected resilience projects.

The second appropriation of funds for the Emergency Relief Program was in 2018 following Hurricanes Harvey, Irma, and Maria, for which the President declared major disasters in areas of Florida, Georgia, Louisiana, Puerto Rico, South Carolina, Texas, and the U.S. Virgin Islands. Under the Bipartisan Budget Act of 2018 (Pub. L. 115–123), Congress provided $330 million for FTA's Emergency Relief Program for transit systems affected by Hurricanes Harvey, Irma, and Maria. On May 31, 2018 FTA allocated $277.5 million for response, recovery, rebuilding, and resilience projects.

The third appropriation of funds for the Emergency Relief Program was in 2019. Under the Additional Supplemental Appropriations for Disaster Relief Act of 2019, Congress appropriated $10.5 million for FTA's Emergency Relief Program for transit systems affected by major declared disasters occurring in calendar year 2018.

Respondents: States, local governmental authorities, Indian tribes and other FTA recipients impacted by Hurricane Sandy which affected mid-Atlantic and northeastern states in October 2012; Hurricane Harvey which affected areas of Texas and Louisiana in August 2017; and Hurricanes Irma and Maria which affected the southeastern states and the territories of the Puerto Rico and the U.S. Virgin Islands in September 2017, and by major declared disasters occurring in calendar year 2018.

Estimated Annual Number of Respondents: 26.

Estimated Total Annual Burden: 4,680 hours.

Frequency: Every Two Years.

Nadine Pembleton,

Director, Office of Management Planning.

[FR Doc. 2019–12809 Filed 6–17–19; 8:45 am]

BILLING CODE 4910–57–P

DEPARTMENT OF TRANSPORTATION

National Highway Traffic Safety Administration

[Docket No. NHTSA–2016–0124; Notice 4]

General Motors LLC, Receipt of Fourth Petition for Inconsequentiality and Notice of Consolidation

AGENCY: National Highway Traffic Safety Administration (NHTSA), Department of Transportation.

ACTION: Notice of receipt of petition.

SUMMARY: On January 2, 2019, TK Holdings Inc. (Takata) filed a defect information report (DIR), in which it determined that a defect existed in certain passenger-side air bag inflators that it manufactured, including passenger inflators that it supplied to General Motors, LLC (GM) for use in certain GMT900 vehicles. GM has petitioned the Agency for a decision that, because of differences in inflator design and vehicle integration, the equipment defect determined to exist by Takata is inconsequential as it relates to motor vehicle safety in the GMT900 vehicles, and that GM should therefore be relieved of its notification and remedy obligations. This notice serves to make the public aware of GM's pending request to the agency and the period for public comment. It does not address GM's substantive claims, nor legal arguments or interpretations asserted by GM.

DATES: The closing date for comments is July 18, 2019.

ADDRESSES: Interested persons are invited to submit written data, views, and arguments regarding this petition for inconsequentiality. Comments must refer to the docket and notice number cited in the title of this notice and be submitted by one of the following methods:

- *Internet:* Go to *http://www.regulations.gov* and follow the online instructions for submitting comments.
- *Mail:* Docket Management Facility, M–30, U.S. Department of Transportation, 1200 New Jersey Avenue SE, West Building, Room W12–140, Washington, DC 20590.
- *Hand Delivery or Courier:* U.S. Department of Transportation, 1200 New Jersey Avenue SE, West Building, Room W12–140, Washington, DC 20590 between 9 a.m. and 5 p.m. Eastern Time, Monday through Friday, except Federal holidays.
- *Facsimile:* (202) 493–2251.

You may call the Docket at (202) 366–9324.

Note that all comments received will be posted without change to *http://www.regulations.gov,* including any personal information provided. Thus, submitting such information makes it public. You may wish to read the Privacy Act notice, which can be viewed by clicking on the ''Privacy and Security Notice'' link in the footer of *http://www.regulations.gov.* DOT's complete Privacy Act Statement is available for review in the **Federal Register** published on April 11, 2000 (65 FR 19477–78).

The petition, supporting materials, and all comments received before the close of business on the closing date indicated above will be filed in the docket and will be considered. Comments and supporting materials received after the closing date will also be filed and will be considered to the extent possible. When the petition is granted or denied, notice of the decision will also be published in the **Federal Register** pursuant to the authority indicated at the end of this notice.

FOR FURTHER INFORMATION CONTACT: For legal issues: Stephen Hench, Office of the Chief Counsel, NCC–100, National Highway Traffic Safety Administration, 1200 New Jersey Avenue SE, Washington, DC 20590 (telephone: (202) 366–5263).

For general information regarding NHTSA's investigation into Takata air bag inflator ruptures and the related recalls: *http://www.safercar.gov/rs/takata/index.html.*

SUPPLEMENTARY INFORMATION:

I. Background

On May 4, 2016, NHTSA issued, and Takata agreed to, an Amendment to the November 3, 2015 Consent Order (the ''Amendment''), under which Takata is bound to declare a defect in all frontal driver and passenger air bag inflators that contain a phase-stabilized ammonium nitrate (PSAN)-based propellant and do not contain a moisture-absorbing desiccant. Such defect declarations are being made on a rolling basis, with the first declaration due May 16, 2016, the second declaration due December 31, 2016, the third declaration due December 31, 2017, and the fourth declaration due December 31, 2018. *See* Amendment at ¶ 14.

GM's May 2016, January 2017, and January 2018 DIRs

Takata timely submitted the first scheduled equipment DIRs on May 16, 2016. *See* Recall Nos. 16E–042, 16E–043, and 16E–044. Those DIRs included non-desiccated passenger inflators, designated as types SPI YP and PSPI–L YD, that were installed as original equipment on certain motor vehicles manufactured by GM (the ''covered passenger inflators''), as well as other non-desiccated passenger inflators installed as original equipment on motor vehicles manufactured by a number of other automakers, which are not at issue here.

The Takata filing triggered GM's obligation to file a DIR for the affected GM vehicles. *See* 49 CFR part 573; Amendment at ¶ 16; November 3, 2015 Coordinated Remedy Order at ¶ 46. GM ultimately submitted two DIRs on May 27, 2016. *See* Recall Nos. 16V–381 (for vehicles in Zone A) and 16V–383 (for vehicles in Zone B). On November 15, 2016, GM petitioned the Agency, under 49 U.S.C. 30118(d), 30120(h) and 49 CFR part 556, for a decision that the equipment defect determined to exist by Takata is inconsequential as it relates to motor vehicle safety in the GMT900 vehicles. *See* GM's Petition for Inconsequentiality and Request for Deferral of Determination Regarding Certain GMT900 Vehicles Equipped with Takata ''SPI YP'' and ''PSPI–L YD'' Passenger Inflators (the ''First Petition for Inconsequentiality'' or ''First Petition''). In a Notice published in the **Federal Register** on November 28, 2016, the Agency published notice of the First Petition and granted two administrative requests, accepting the petition out of time and granting GM additional time to provide data in support of the petition. *See* 81 FR 85681.

On January 3, 2017, Takata timely submitted the second scheduled equipment DIRs for additional covered passenger inflators. *See* Recall Nos. 17E–001, 17E–002, and 17E–003. Again, the Takata filing triggered GM's obligation to file a DIR for the affected GM vehicles. *See* 49 CFR part 573; Amendment at ¶ 16; Third Amendment to Coordinated Remedy Order at ¶ 32. GM ultimately submitted its DIRs on January 10, 2017, and notified NTHSA of its intention to file an inconsequentiality petition.[1]

[1] When a manufacturer files a petition for inconsequentiality, the affected DIR will not be

Contemporaneous with its DIRs, GM submitted to the Agency a Petition for Inconsequentiality and Request for Deferral of Determination Regarding Certain GMT900 Vehicles Equipped with Takata ''SPI YP'' and ''PSPI–L YD'' Passenger Inflators Subject to January 2017 Takata Equipment DIR Filings (the ''Second Petition for Inconsequentiality'' or ''Second Petition'').

On September 11, 2017, the Agency published a notice of receipt of the Second Petition and, as GM's Second Petition was virtually identical to its First Petition (both involved the same covered passenger inflators and same vehicle platform, relied upon the same purported evidence, and would rely upon the same forthcoming report), consolidated the Second Petition with the First Petition under Docket No. NHTSA–2016–0124. *See* 82 FR 42718.

On January 2, 2018, Takata timely [2] submitted the third scheduled equipment DIRs for additional covered passenger inflators. *See* Recall Nos. 18E–001, 18E–002, and 18E–003. Again, the Takata filing triggered GM's obligation to file a DIR for the affected GM vehicles. *See* 49 CFR part 573; Amendment at ¶ 16; Third Amendment to Coordinated Remedy Order at ¶ 32. GM ultimately submitted its DIRs on January 9, 2018, and notified NTHSA of its intention to file an inconsequentiality petition.[3] Contemporaneous with its DIRs, GM submitted to the Agency a Petition for Inconsequentiality Regarding Certain GMT900 Vehicles Equipped with Takata ''SPI YP'' and ''PSPI–L YD'' Passenger Inflators Subject to January 2018 Takata Equipment DIR Filings (the ''Third Petition for Inconsequentiality'' or ''Third Petition''). GM's Third Petition requested that NHTSA grant GM's First, Second and Third Petitions or, in the alternative, that NHTSA defer its decision on the First, Second, and Third Petitions until March 31, 2018, which would allow GM time to complete further study and analysis.

On April 9, 2018, the Agency published a notice of receipt of the Third Petition, consolidated the Third Petition with the First and Second Petitions under Docket No. NHTSA–2016–0124, and—emphasizing that NHTSA's previous grant of additional time for GM to present information was extraordinary—denied GM's request that NHTSA defer decision on the Third Petition until March 31, 2018. *See* 83 FR 15233.

GM's January 11, 2019 DIRs

Takata submitted the fourth scheduled equipment DIRs on January 2, 2019. Once more, the Takata filing triggered GM's obligation to file a DIR for the affected GM vehicles. *See* 49 CFR part 573; Amendment at ¶ 16; Third Amendment to Coordinated Remedy Order at ¶ 32. GM submitted its DIRs on January 11, 2019. Therein, in accordance with 49 CFR 573.6(c)(8)(iii), GM notified NHTSA of its intention to file a petition for inconsequentiality and contemporaneously submitted to the Agency a Petition for Inconsequentiality Regarding Certain GMT900 Vehicles Equipped with Takata ''SPI YP'' and ''PSPI–L YD'' Passenger Inflators Subject to January 2019 Takata Equipment DIR Filings (the ''Fourth Petition for Inconsequentiality'' or ''Fourth Petition'').[4]

II. Class of Motor Vehicles Involved

GM's Fourth Petition involves certain ''GMT900'' vehicles that contain the covered passenger inflators (designated as inflator types ''SPI YP'' and ''PSPI–L YD''). GMT900 is a GM-specific vehicle platform that forms the structural foundation for a variety of GM trucks and sport utility vehicles, including: Chevrolet Silverado 1500, GMC Sierra 1500, Chevrolet Silverado 2500/3500, GMC Sierra 2500/3500, Chevrolet Tahoe, Chevrolet Suburban, Chevrolet Avalanche, GMC Yukon, GMC Yukon XL, Cadillac Escalade, Cadillac Escalade ESV, and Cadillac Escalade EXT. The Fourth Petition involves the following GMT900 vehicles:

- In Zone A, affected model year 2014 GMT900 vehicles. Zone A comprises the following states and U.S. territories: Alabama, California, Florida, Georgia, Hawaii, Louisiana, Mississippi, South Carolina, Texas, Puerto Rico, American Samoa, Guam, the Northern Mariana Islands (Saipan), and the U.S. Virgin Islands. *See* Amendment at ¶ 7.a.
- In Zone B, affected model year 2011–2014 GMT900 vehicles. Zone B comprises the following states: Arizona, Arkansas, Delaware, District of Columbia, Illinois, Indiana, Kansas, Kentucky, Maryland, Missouri, Nebraska, Nevada, New Jersey, New Mexico, North Carolina, Ohio, Oklahoma, Pennsylvania, Tennessee, Virginia, and West Virginia. *See* Amendment at ¶ 7.b.
- In Zone C, affected model year 2010–2014 GMT900 vehicles. Zone C comprises the following states: Alaska, Colorado, Connecticut, Idaho, Iowa, Maine, Massachusetts, Michigan, Minnesota, Montana, New Hampshire, New York, North Dakota, Oregon, Rhode Island, South Dakota, Utah, Vermont, Washington, Wisconsin, and Wyoming. *See* Amendment at ¶ 7.c.

III. Summary of GM's Fourth Petition for Inconsequentiality

GM's Fourth Petition relies on arguments, data, and analysis in its First and Second Petitions (and supplemental brief thereto) and Third Petition, information submitted to the Agency during briefings with NHTSA, additional arguments and engineering analysis as presented in the Fourth Petition, and the full administrative record. *See* Fourth Petition at 1.

According to the Fourth Petition, ''[a]fter the filing of the Third Petition, GM and Northrop Grumman continued to investigate and analyze the longer-term performance of the GMT900 Inflators.'' [5] *Id.* at 3. Specifically, GM states that Northrop Grumman: Aged leftover GMT900 inflators from the original aging study to ''extreme field exposure'' of an estimated thirty-five years—''produc[ing] more ruptures in the comparison group non-GMT900 Takata inflators but no ruptures in the GMT900 Inflators''—and applied a predictive-rupture model to GMT900 Inflators yielding results consistent with those from the long-term aging study. *Id.* at 3–4. GM contends it thereby ''has established that worse-than-worst case humidity exposure and temperature cycling will not cause inflator ruptures in the GMT900 Vehicles at any point within even unrealistically conservative vehicle-service life estimates''—*i.e.,* that the covered passenger inflators, as integrated into the GMT900 vehicles, do not present an unreasonable risk to safety. *See id.* at 4.

According to the Fourth Petition, GM's position is based upon the following: Field data, including GM's estimated 66,894 Takata passenger air bag inflator deployments in GMT900 vehicles without a reported rupture and ballistic tests of 4,270 covered passenger inflators without a rupture, the ''final'' results of Northrop Grumman's study of

made public unless and until the Agency denies the petition.

[2] December 31, 2017 was a Sunday, and Monday, January 1, 2018 was a federal holiday.

[3] When a manufacturer files a petition for inconsequentiality, the affected DIR will not be made public unless and until the Agency denies the petition.

[4] When a manufacturer files a petition for inconsequentiality, the affected DIR will not be made public unless and until the Agency denies the petition.

[5] To supplement its internal analysis, GM retained a third-party expert, Orbital ATK (''OATK''), to conduct a long-term aging study to estimate the service life expectancy of the covered passenger inflators in the GMT900 vehicles. *See* First Petition at 12. Northrop Grumman has since acquired OATK.

inflators artificially exposed to additional humidity and temperature cycling without a rupture or abnormal deployment and accompanying statistical interpretation of those results,[6] and a predictive-aging model developed by Northrop Grumman. *Id.* at 12–16. GM also states that it ''does not believe'' that objections in several public comments regarding the design of the aging study ''merit a comprehensive response,'' although GM does ''emphasize[ ]'' ''a few points regarding the study's design'' to contend that its analysis is supported. *See id.* at 15–16.

In addition, GM states that the covered passenger inflators are not used by any other original equipment manufacturer and, further, that the covered inflators have a number of unique design features that influence burn rates and internal ballistic dynamics, including greater vent-area-to-propellant-mass ratios, steel end caps, and thinner propellant wafers. *See id.* at 6. GM also states that the physical environment of the GMT900 vehicles better protects the covered passenger inflators from temperature cycling that can lead to propellant degradation and, ultimately, inflator rupture. *See id.* at 7.

This notice serves to make the public aware of GM's pending request to the agency and the period for public comment. Accordingly, it does not address the substantive claims, or legal arguments or interpretations, asserted by GM.

IV. Consolidation

GM's Fourth Petition for Inconsequentiality involves newer model years of the same covered passenger inflators (*i.e.,* frontal passenger inflator types ''SPI YP'' and ''PSPI–L YD''), the same vehicle platform (*i.e.,* the GMT900), and similar purported evidence to support the safety of the inflators (*e.g.,* estimated field deployments, ballistic testing), and relies upon results derived from the same long-term aging study as GM's First, Second, and Third Petitions. Accordingly, it is appropriate to evaluate the First, Second, Third, and Fourth Petitions together. In the interest of clarity, consistency, and efficiency, the Agency is consolidating the Fourth Petition with the First, Second, and Third Petitions (the ''Consolidated Petitions'') under Docket No. NHTSA–2016–0124.

Authority: 49 U.S.C. 30101, *et seq.,* 30118, 30120(h), 30162, 30166(b)(1), 30166(g)(1); delegation of authority at 49 CFR 1.95(a); 49 CFR parts 556, 573, 577.

Dated: June 12, 2019.

Jonathan Morrison,

Chief Counsel.

[FR Doc. 2019–12869 Filed 6–17–19; 8:45 am]

BILLING CODE 4910–59–P

[6] After filing its Third Petition, Northrop Grumman continued the long-term aging study by aging remaining GMT900 covered passenger inflators to thirty-five years—five years beyond the study's original thirty years. Fourth Petition at 13. GM states that it observed no ruptures in the remaining forty-five inflators after this additional aging, and that this ''is consistent with field data and ballistic testing data from GMT900 Inflators recovered from the field.'' *Id.* at 13–14.

DEPARTMENT OF TRANSPORTATION

Office of the Secretary of Transportation

Notice of Funding Opportunity for Department of Transportation's Port Infrastructure Development Program Under the Consolidated Appropriations Act, 2019

AGENCY: Office of the Secretary of Transportation, DOT.

ACTION: Notice of funding opportunity.

SUMMARY: The Consolidated Appropriations Act, 2019 (''FY 2019 Appropriations Act''), appropriated $292,730,000 for the Port Infrastructure Development Program to make grants to improve port facilities at coastal seaports. This notice announces the availability of funding for grants under this program and establishes selection criteria and application requirements. The Act directed that $92,730,000 of the appropriated funds shall be for grants to the 15 coastal seaports that handled the greatest number of loaded foreign and domestic twenty-foot equivalent units of containerized cargo in 2016, as identified by the U.S. Army Corps of Engineers. Funds for the Port Infrastructure Development Program are to be awarded as discretionary grants on a competitive basis for projects that will improve the safety, efficiency, or reliability of the movement of goods into, out of, around, or within a coastal seaport, as well as the unloading and loading of cargo at a coastal seaport. All Port Infrastructure Development Program funding grant recipients must meet all applicable Federal requirements, including the Buy American Act. The purpose of this notice is to solicit applications for Port Infrastructure Development Program.

DATES: Applications must be submitted by 8:00 p.m. E.D.T. on September 16, 2019.

ADDRESSES: Applications must be submitted through *Grants.gov.*

FOR FURTHER INFORMATION CONTACT: For further information concerning this notice, please contact the Port Infrastructure Development Program staff via email at *Ports@dot.gov,* or call Bob Bouchard, Director, Office of Port Infrastructure Development, at 202–366–5076. A TDD is available for individuals who are deaf or hard of hearing at 202–366–3993. In addition, the Department of Transportation (DOT) will regularly post answers to questions and requests for clarifications as well as information about webinars for further information at *www.transportation.gov/Portgrants.*

SUPPLEMENTARY INFORMATION: Each section of this notice contains information and instructions relevant to the application process for the Port Infrastructure Development Program discretionary grants, and all applicants should read this notice in its entirety so that they have the information they need to submit eligible and competitive applications.

Table of Contents

A. Program Description
B. Federal Award Information
C. Eligibility Information
D. Application and Submission Information
E. Application Review Information
F. Federal Award Administration Information
G. Federal Awarding Agency Contacts
H. Other Information

A. Program Description

The Port Infrastructure Development Program was established under 46 U.S.C. 50302. The statute authorizes the Department of Transportation (''Department'' or ''DOT'') to establish a port infrastructure development program for the improvement of port facilities. To carry out a project under this program, the Department may provide financial assistance, including grants, to port authorities or commissions or their subdivisions and agents for port and intermodal infrastructure-related projects. The Consolidated Appropriations Act, 2019 (Pub. L. 116–6, February 15, 2019) appropriated $292,730,000 to the Port Infrastructure Development Program, to make discretionary grants to improve port facilities at coastal seaports. The Act directed that $92,730,000 of this amount be reserved for grants to the 15 coastal seaports that handled the greatest number of loaded foreign and domestic twenty-foot equivalent units of containerized cargo in 2016, as identified by the U.S. Army Corps of Engineers. Through this program, the Department seeks projects that will improve facilities at coastal seaports.

Among possible project outcomes, the Department seeks projects that will: (1) Advance technology-supported safety and design efficiency improvements; (2) bring facilities to a state of good repair and improve resiliency; (3) promote efficient trade in energy resources; (4) promote exports of manufacturing, agriculture, or other goods; and (5) for only the top 15 coastal ports, support the safe flow of agricultural and food products, free of pests and disease, domestically and internationally. Accordingly, the Department expects to award at least one project that advances each of the aforementioned project outcomes, but a project does not need to address one or more of these outcomes to be awarded.

B. Federal Award Information

1. Amount Available

DOT intends to award up to $292,730,000 to projects that improve port facilities at or near coastal seaports. The FY 2019 Appropriations Act allows up to 2 percent of the funds appropriated be available for necessary costs of grant administration.

If the DOT does not receive sufficient qualified applications, it will award less than the amount available.

2. Award Size

The minimum Port Infrastructure Development Program award size is $10 million. Except as limited by the amount of available funding, there is no maximum award size.

3. Availability of Funds

To ensure the funds are responsibly expended in a timely manner, the Department, to the greatest extent possible, seeks to obligate Port Infrastructure Development Program funds by September 30, 2022. Obligation occurs when a selected applicant and DOT enter into a written grant agreement after the applicant has satisfied applicable administrative requirements, including transportation planning and environmental review requirements. Unless authorized by the Department in writing after the Department's announcement of Port Infrastructure Development Program awards, any costs incurred prior to the Department's obligation of funds for a project are ineligible for reimbursement. The Department will determine the period of performance for each award based on the specific project that was evaluated and selected. As part of the review and selection process described in Section E.2., DOT will consider a project's likelihood of being ready to proceed with an obligation of Port Infrastructure Development Program funds by September 30, 2022 and complete liquidation of these obligations within a reasonable timeline.

4. Awarded Funding Allocations

i. Top 15 Coastal Seaports

Of the appropriated amount available, $92,730,000 is reserved for the 15 coastal seaports that handled the greatest number of loaded foreign and domestic twenty-foot equivalent units of containerized cargo in 2016, as identified by the U.S. Army Corps of Engineers.[1] A listing of these top container ports can be found at: *https://usace.contentdm.oclc.org/digital/collection/p16021coll2/id/1431.* The 15 coastal seaports may also be awarded funding from the $200,000,000 that is not reserved.

ii. Project Outcomes

The Department anticipates awarding at least one project that advances each of the project outcomes described in Section E.1.iii of this notice. However, a project does not need to address one or more of these outcomes to be awarded.

C. Eligibility Information

To be selected for a Port Infrastructure Development Program discretionary grant, an applicant must be an Eligible Applicant and the project must be an Eligible Project.

1. Eligible Applicants

An eligible applicant for a Port Infrastructure Development Program discretionary grants is a port authority, a commission or its subdivision or agent under existing authority, as well as a State or political subdivision of a State or local government, a Tribal government, a public agency or publicly chartered authority established by one or more States, a special purpose district with a transportation function, a multistate or multijurisdictional group of entities, or a lead entity described above jointly with a private entity or group of private entities.

If multiple States or jurisdictions submit a joint application, that application must identify a lead applicant as the primary point of contact and identify the primary recipient of the award. Joint applications must include a description of the roles and responsibilities of each applicant and must be signed by each applicant.

2. Cost Sharing or Matching

This section of the notice describes cost share requirements for Port Infrastructure Development Program Grant award.

The Federal share of the costs for which an expenditure is made under a Port Infrastructure Development Program grant may not exceed 80 percent. Non-Federal sources include State funds originating from programs funded by State revenue, local funds originating from State or local revenue funded programs, or private funds. The application should demonstrate, such as through a commitment letter or other documentation, the sources of the non-Federal funds. Unless otherwise authorized by statute, State or local cost-share may not be counted as the non-Federal share for both the Port Infrastructure Development Program Grant award and another Federal grant program. Preference will be given to those projects that require a lower percentage Federal share of costs (see Section E. iv. for information on how the Department will evaluate leverage).

The Department will not consider previously incurred costs or previously expended or encumbered funds towards the matching requirement for any project. Matching funds are subject to the same Federal requirements described in Section F.2. as awarded funds.

As directed by statute, for the purpose of eligibility, the proceeds of Federal assistance under chapter 6 of Title 23, United States Code or sections 501 through 504 of the Railroad and Revitalization and Regulatory Reform Act of 1976 (Pub. L. 94–210), as amended, shall be considered to be part of the non-Federal share of project costs if the loan is repayable from non-Federal funds, unless otherwise requested by the project sponsor.

Cost share will also be evaluated according to the ''Leveraging of Federal Funding'' evaluation criterion described in Section E. iv. That section explains that the Department seeks applications for projects that maximize the non-Federal share, and clarifies consideration of Federal assistance as part of the selection criterion.

3. Other

iii. Eligible Projects

For the purposes of these grants, a ''coastal seaport'' is a seaport capable of receiving deep-draft vessels (drafting greater or equal to 20 feet) from a foreign or domestic port.

[1] These 15 ports are: Los Angeles, Long Beach, New York (NY and NJ), Savannah, Port of Virginia, Houston, Oakland, Tacoma, Charleston, Seattle, Jacksonville, Miami, Port Everglades, San Juan (PR), and Honolulu.

Eligible projects for Port Infrastructure Development Program grants shall be located either within the boundary of a coastal seaport, or outside the boundary of a coastal seaport and directly related to port operations or to an intermodal connection to a port. Eligible projects should improve the safety, efficiency, or reliability of the movement of goods into, out of, around, or within a port, as well as the unloading and loading of cargo at a coastal seaport including phytosanitary facilities. Examples of potential projects include, but are not limited to: Highway or rail infrastructure that develops or extends intermodal connectivity, intermodal facilities, marine terminal equipment, wharf construction or redevelopment, vessel alternative fueling access and distribution, fuel efficient cargo handling equipment, freight intelligent transportation systems, digital infrastructure systems, and berth dredging incidental to construction.

This program will not fund vessel construction.

iv. Project Components

An application may describe a project that contains more than one component and may describe components that may be carried out by parties other than the applicant. The Department may award funds for a component, instead of the larger project, if that component (1) independently meets minimum award amounts described in Section B and all eligibility requirements described in Section C; (2) independently aligns well with the selection criteria specified in Section E; and (3) meets National Environmental Policy Act (NEPA) requirements with respect to independent utility. Independent utility means that the component will represent a transportation improvement that is usable even if no other improvement is made in the area, and will be ready for intended use upon completion of that component's construction. All project components that are presented together in a single application must demonstrate a relationship or connection between them. (See Section D.2. iv. for Required Approvals).

Applicants should be aware that, depending upon the relationship between project components and applicable Federal law, Federal funding of some project components may make other project components subject to Federal requirements as described in Section F.2.

The Department strongly encourages applicants to identify in their applications the project components that have independent utility and separately detail costs and requested Port Infrastructure Development Program funding for those components. If the application identifies one or more independent project components, the application should clearly identify how each independent component addresses selection criteria and produces benefits on its own, in addition to describing how the full proposal of which the independent component is a part addresses selection criteria.

v. Application Limit

Each lead applicant may submit no more than one application.

D. Application and Submission Information

1. Address

Applications must be submitted to *Grants.gov.* Instructions for submitting applications can be found at *www.transportation.gov/Portgrants* along with specific instructions for the forms and attachments required for submission.

2. Content and Form of Application Submission

The application must include the Standard Form 424 (Application for Federal Assistance), cover page, and the Project Narrative. More detailed information about the Project Narrative follows. Applicants should also complete and attach to their application the ''2019 Project Information'' form available at *www.transportation.gov/Portgrants.* The Department recommends that the project narrative follow the basic outline below to address the program requirements and assist evaluators in locating relevant information.

I. Project Description	See D.2.i.
II. Project Location	See D.2.ii.
III. Grant Funds, Sources and Uses of all Project Funding.	See D.2.iii.
IV. Leveraging of Federal Funds.	See D.2.iv.
V. Project Costs and Benefits.	See D.2.v.
VI. Project Outcomes	See D.2.vi.
VII. Demonstrate Project Readiness.	See D.2.vii.
VIII. Domestic Preference.	See D.2.viii.

The project narrative should include the information necessary for the Department to determine that the project satisfies project requirements described in Sections B and C and to assess the selection criteria specified in Section E.1. To the extent practicable, applicants should provide supporting data and documentation in a form that is directly verifiable by the Department. The Department may ask any applicant to supplement data in its application, but expects applications to be complete upon submission. The Department may seek clarifying or additional information from applicants according to circumstances described in Section E.2.

In addition to a detailed statement of work, detailed project schedule, and detailed project budget, the project narrative should include a table of contents, maps and graphics, as appropriate, to make the information easier to review. The Department recommends that the project narrative be prepared with standard formatting preferences (a single-spaced document, using a standard 12-point font such as Times New Roman, with 1-inch margins, and the narrative text in one column only). The project narrative may not exceed 30 pages in length, excluding cover pages and table of contents. The only substantive portions that may exceed the 30-page limit are documents supporting assertions or conclusions made in the 30-page project narrative. Except for the benefit cost analysis, the Department does not consider support documentation or websites an essential part of the application and may not review supplemental materials as part of the application. If possible, website links to supporting documentation should be provided rather than copies of these supporting materials. If supporting documents are submitted, applicants should clearly identify within the project narrative the relevant portion of the project narrative that each supporting document supports. The Department recommends applications include the following sections:

i. Project Description

The first section of the application should provide a concise description of the project, the port-related transportation challenges that it is intended to address, and how it will address those challenges. The project description should provide both a high-level overview of the overall project and a clear itemization of its major components. This section may discuss the project's history, including a description of any previously completed components. The applicant may use this section to place the project into a broader context of other transportation infrastructure investments being pursued by the project sponsor. This section should not address any selection criteria or project outcomes advanced by the project.

ii. Project Location

This section of the application should describe the project location, including

a detailed geographical description of the proposed project, a map of the project's location and connections to existing transportation infrastructure, and geospatial data describing the project location. This section should also identify whether the project is located in a qualified opportunity zone [2] designated pursuant to 26 U.S.C. 1400Z–1.

iii. Grant Funds, Sources, and Uses of Project Funds

This section of the application should describe the project's budget. This budget should not include any previously incurred expenses.

At a minimum, this section should include:

(A) Project costs;

(B) For all funds to be used for eligible project costs, the source and amount of those funds;

(C) Documentation of funding commitments for non-Federal funds to be used for eligible project costs (documentation may be referenced and submitted as an appendix);

(D) For Federal funds to be used for eligible project costs, the amount, nature, and source of any required non-Federal match for those funds;

(E) A budget showing how each source of funds will be spent. The budget should show how each funding source will share in each major construction activity, and present that data in dollars and percentages. Funding sources should be grouped into three categories: Non-Federal; Ports Program; and other Federal. If the project contains individual components, the budget should separate the costs of each project component. If the project will be completed in phases, the budget should separate the costs of each phase. The budget detail should sufficiently demonstrate that the project satisfies the statutory cost-sharing requirements described in Section C.2.

In addition to the information enumerated above, this section should provide complete information on how all project funds may be used. For example, if a particular source of funds is available only after a condition is satisfied, the application should identify that condition and describe the applicant's control over whether it is satisfied. Similarly, if a particular source of funds is available for expenditure only during a fixed time period, the application should describe that restriction. Complete information about project funds will ensure that the Department's expectations for award execution align with any funding restrictions unrelated to the Department, even if an award differs from the applicant's request.

iv. Leveraging of Federal Funds

The Department calculates leverage as the ratio of non-Federal share of the project's future eligible project costs to total future eligible project costs. This section of the application should include:

(A) A description of the applicant's activities to maximize the non-Federal share of the project funding;

(B) A description of all evaluations of the project for private funding, the outcome of those evaluations, and all activities undertaken to pursue private funding for the project;

(C) A description of any fiscal constraints that affect the applicant's ability to increase the amount of non-Federal revenue dedicated for transportation infrastructure.

(D) If applicable, the amount of non-Federal investment the port has undertaken for related projects in the recent past as well as going forward.

v. Project Costs and Benefits

This section describes the recommended approach for the completion and submission of a benefit cost analysis (BCA) as an appendix to the Project Narrative. The results of the analysis should also be summarized in the Project Narrative directly.

The appendix should provide present value estimates of a project's benefits and costs relative to a no-build baseline. To calculate present values, applicants should apply a real discount rate (*i.e.,* the discount rate net of the inflation rate) of 7 percent per year to the project's streams of benefits and costs. The purpose of the BCA is to enable the Department to evaluate the project's cost-effectiveness by estimating a benefit-cost ratio and calculating the magnitude of net benefits for the project.

The primary economic benefits from projects eligible for Port Infrastructure Development Program grants are likely to include savings in travel time costs, vehicle and port operating costs, and safety costs for both existing users of the improved facility and new users who may be attracted to it because of the project. Savings in infrastructure maintenance costs may also be quantified. Applicants may describe other categories of benefits in the BCA that are more difficult to quantify and value in economic terms, such as improving the reliability of travel times, while also providing numerical estimates of the magnitude and timing of each of these additional impacts wherever possible. Any benefits claimed for the project, both quantified and unquantified, should be clearly tied to the expected outcomes of the project.

The BCA should include the full costs of developing, constructing, operating, and maintaining the proposed project, as well as the expected timing or schedule for costs in each of these categories. The BCA may also consider the present discounted value of any remaining service life of the asset at the end of the analysis period. The costs and benefits that are compared in the BCA should also cover the same project scope, including the costs of other related projects on which the benefits of the Port Infrastructure Development Program project depend.

The BCA should carefully document the assumptions and methodology used to produce the analysis, including a description of the baseline, the sources of data used to project the outcomes of the project, and the values of key input parameters. Applicants should provide all relevant files used for their BCA, including any spreadsheet files and technical memos describing the analysis (whether created in-house or by a contractor). The spreadsheets and technical memos should present the calculations in sufficient detail and transparency to allow the analysis to be reproduced by DOT evaluators. Detailed guidance for estimating some types of quantitative benefits and costs, together with recommended economic values for converting them to dollar terms and discounting to their present values, are available in the Department's guidance for conducting BCAs for projects seeking funding under the Port Infrastructure Development Program (*www.transportation.gov/Portgrants*).

vi. Project Outcomes

If the project advances one or more of the five project outcomes described in section A of this notice, this section of the application should address those outcomes. The applicant should provide information demonstrating advancement of a particular outcome, consistent with the information described below, only if the project reasonably addresses that outcome. Applicants should avoid addressing a particular outcome if it is unrelated to the project. The Department recognizes that projects might address several outcomes but encourages applicants to describe only those outcome(s) the project most advances. The Department does not expect each project will address each outcome, so it is permissible not to address outcomes that do not apply to the project. An

[2] See *https://www.cdfifund.gov/Pages/Opportunity-Zones.aspx* for more information on opportunity zones.

applicant does not need to address one more of these outcomes to be awarded.

(a) Advance technology-supported safety, and design efficiency improvements by incorporating technology or innovative approaches to port safety, design, or efficiency.

If a project advances this outcome, this section of the application should describe technology and additional features that the applicant will incorporate into the project. The application should also include a discussion of any benefits of the proposed innovative technology beyond improving efficiency. Indicators of efficiency could also include vessel and/or truck turn times, capacity increases or enhancements, modal diversion, or improved connectivity.

If the project incorporates fully-automated cargo-handling equipment, the applicant should provide information demonstrating the job change that will result from the project, including supporting evidence that the project will not directly result in a net job loss as described in Section E.1.vi.

(b) Bring facilities to a state of good repair and improve resiliency by addressing current or projected vulnerabilities in the condition of port transportation facilities.

If a project advances this outcome, this section of the application should describe how the project will contribute to a state of good repair by improving the condition or resilience of existing transportation facilities and intermodal connectors including the project's current condition and how the proposed project will improve it, and any estimates of impacts on long-term cost structures or impacts on overall life-cycle costs.

(c) Promote efficient energy trade by supporting the efficient movement of energy products and/or increasing national energy production capacity.

If a project advances this outcome, this section should describe energy commodities that the port handles and how the project improves the efficiency of domestically-produced energy movements. For the purpose of this notice, energy commodities means: (1) Petroleum products; (2) natural gas (including LNG); (3) coal; and (4) biofuels. Applicants are expected to quantify current and projected volumes of those commodities through the port in the application, both by tonnage and value.

(d) Promote manufacturing, agriculture, or other forms of exports by increasing the efficient movement of goods for exports and/or increasing national export capacity.

If a project advances this outcome, this section should include a description of the applicant's current export initiatives, including the volume of imports and exports by tonnage and value and export to import ratio, as well as a description of how the project would improve port capacity to handle exports or improve the efficiency of export flows.

(e) For only the top 15 coastal ports, support the safe flow of agricultural and food products, free of pests and disease, domestically and internationally.

If a project advances this outcome, this section should describe how the project will further the phytosanitary treatment requirements of 7 CFR 305.5–305.8, including improving facilities to prevent the inadvertent introduction of harmful organisms and diseases into the United States

vii. Demonstrated Project Readiness

This section of the application should include information that, when considered with the project budget information presented elsewhere in the application, is sufficient for the Department to evaluate whether the project is reasonably expected to begin construction in a timely manner. To assist the Department's project readiness assessment, the applicant should provide information on technical feasibility, project schedule, project approvals, and project risk, each of which is described in greater detail in the following sections. To minimize redundant information in the application, the Department encourages applicants to cross-reference from this section of their application to relevant substantive information in other sections of the application.

The guidance here is about what information applicants should provide and how the applicant should organize their application. Guidance describing how the Department will evaluate a project's readiness is described in Section E.1.iv of this notice. Applicants also should review that section when considering how to organize their application.

Applicants are not required to follow the specific format described here, but this organization, which addresses each relevant aspect of project readiness, promotes a clear discussion that assists project evaluators.

(a) Technical Feasibility

The applicant should demonstrate the technical feasibility of the project with engineering and design studies and activities; the development of design criteria and/or a basis of design; the basis for the cost estimate presented in the application, including the identification of contingency levels appropriate to its level of design; and any scope, schedule, and budget risk mitigation measures. Applicants should include a detailed statement of work that focuses on the technical and engineering aspects of the project and describes in detail the project to be constructed.

(b) Project Schedule

The applicant should include a detailed project schedule that identifies all major project milestones. Examples of such milestones include State and local planning approvals; start and completion of NEPA and other Federal environmental reviews and approvals including permitting; design completion; right of way acquisition; approval of plans, specifications and estimates; procurement; State and local approvals; project partnership and implementation agreements, including agreements with railroads; and construction. The project schedule should be sufficiently detailed to demonstrate that the project can begin construction quickly upon obligation of Port Infrastructure Development Program funds, and that the grant funds will be spent expeditiously once construction starts.

(c) Required Approvals

(1) Environmental Permits and Reviews.

(a) Information about the NEPA status of the project. The applicant should indicate the anticipated NEPA level of review for the project and describe any environmental analysis in progress or completed. This includes Categorical Exclusion, Environmental Assessment/Finding of No Significant Impact, or Environmental Impact Statement/Record of Decision. The applicant should review Maritime Administration Manual of Orders MAO 600–1 prior to submission. The application should detail the type of NEPA review underway, where the project is in the process, and indicate the anticipated date of completion of all milestones and of the final NEPA determination. If the last agency action with respect to NEPA documents occurred more than three years before the application date, the applicant should describe why the project has been delayed and include a proposed approach for verifying and, if necessary, updating this material in accordance with applicable NEPA requirements.

(b) Environmental Permits and Reviews. The application should demonstrate receipt (or reasonably anticipated receipt) of all environmental

permits and approvals necessary, including Section 106 of the National Historical Preservation Act, 54 U.S.C. 306108, and Section 7 of the Endangered Species Act, 16 U.S.C. 1531, for the project to proceed to construction on the timeline specified in the project schedule and necessary to meet the statutory obligation deadline, including satisfaction of all Federal, State, and local requirements and completion of the NEPA process.

(c) Additional information.

The application should also include:

(i) Information on reviews, approvals, and permits by other agencies. An application should indicate whether the proposed project requires reviews or approval actions by other agencies,[3] indicate the status of such actions, and provide detailed information about the status of those reviews or approvals and should demonstrate compliance with any other applicable Federal, State, or local requirements, and when such approvals are expected. Applicants should provide a website link or other reference to copies of any reviews, approvals, and permits prepared.

(ii) A description of whether the project is dependent on, or affected by, U.S. Army Corps of Engineers investment and the U.S. Army Corps of Engineers planned activities as it relates to the project.

(iii) Environmental studies or other documents, preferably through a website link, that describe in detail known project impacts, and possible mitigation for those impacts. This could include State NEPA analysis information as applicable.

(iv) A description of discussions with the appropriate Maritime Administration NEPA Coordinator in the Maritime Administration Office of Environment regarding the project's compliance with NEPA and other applicable Federal environmental reviews and approvals.

(v) A description of public engagement about the project that has occurred, including details on the degree to which public comments and commitments have been integrated into project development and design.

(2) State and Local Approvals. The applicant should demonstrate receipt of State and local approvals on which the project depends, such as State and local environmental and planning. Additional support from relevant State and local officials is not required; however, an applicant should demonstrate that the project has broad public support.

(d) Assessment of Project Risks and Mitigation Strategies

Project risks, such as procurement delays, environmental uncertainties, increases in real estate acquisition costs, uncommitted local match, or lack of legislative approval, affect the likelihood of successful project start and completion. The applicant should identify all material risks to the project and the strategies that the lead applicant and any project partners have undertaken or will undertake in order to mitigate those risks. The applicant should assess the greatest risks to the project and identify how the project parties will mitigate those risks.

To the extent the applicant is unfamiliar with the requirements for receiving and expending Federal grant funds administered by the Maritime Administration, the applicant should contact the Ports Program staff for information on the pre-requisite steps to obligate Federal funds in order to ensure that their project schedule is reasonable and there are no risks of delays in satisfying Federal requirements.

viii. Domestic Preference

This section should include a description of whether materials and manufactured products to be used in the project are produced or manufactured domestically. This section should also include an assessment of what, if any, materials or manufactured products would require an exception or waiver of the Buy American provisions described in section F.2 of this notice and the applicant's current efforts and planned future efforts to maximize domestic content. The content of this section of the application is particularly important for projects that propose the acquisition of heavy equipment, including cranes, that are often procured from foreign manufacturers. If the project may, or is likely to, need a waiver or exception, the applicant should describe a plan to maximize domestic content.

3. Unique Entity Identifier and System for Award Management (SAM)

Each applicant must: (1) Be registered in SAM before submitting its application; (2) provide a valid unique entity identifier in its application; and (3) continue to maintain an active SAM registration with current information at all times during which it has an active Federal award or an application or plan under consideration by a Federal awarding agency.

The Department may not make a Port Infrastructure Development Program Grant award to an applicant until the applicant has complied with all applicable unique entity identifier and SAM requirements and, if an applicant has not fully complied with the requirements by the time Department is ready to make a Port Infrastructure Development Program grant award, the Department may determine that the applicant is not qualified to receive a Port Infrastructure Development Program grant award and use that determination as a basis for making a Port Infrastructure Development Program grant award to another applicant.

4. Submission Dates and Times

i. Deadline

Applications must be submitted by 8:00 p.m. E.D.T. on September 16, 2019. The funding opportunity on *Grants.gov* will open by August 1, 2019.

To submit an application through *Grants.gov*, applicants must:

(1) Obtain a Data Universal Numbering System (DUNS) number;

(2) Register with the System for Award Management (SAM) at *www.SAM.gov;*

(3) Create a *Grants.gov* username and password; and

(4) The E-Business Point of Contact (POC) at the applicant's organization must respond to the registration email from *Grants.gov* and login at *Grants.gov* to authorize the applicant as the Authorized Organization Representative (AOR). Please note that there can be more than one AOR for an organization.

Please note that the *Grants.gov* registration process usually takes 2–4 weeks to complete and that the Department will not consider late applications that are the result of failure to register or comply with *Grants.gov* applicant requirements in a timely manner. For information and instruction on each of these processes, please see instructions at *http://www.grants.gov/web/grants/applicants/applicant faqs.html.* If applicants experience difficulties at any point during the registration or application process, please call the *Grants.gov* Customer Service Support Hotline at 1(800) 518–4726, Monday–Friday from 7:00 a.m. to 9:00 p.m. EST.

ii. Consideration of Applications

Only applicants who comply with all submission deadlines described in this notice and electronically submit valid applications through *Grants.gov* will be eligible for award. Applicants are strongly encouraged to make submissions in advance of the deadline.

[3] Projects that may impact protected resources such as wetlands, species habitat, cultural or historic resources require review and approval by Federal and State agencies with jurisdiction over those resources.

iii. Late Applications

Applicants experiencing technical issues with *Grants.gov* that are beyond the applicant's control must contact *Ports@dot.gov* prior to the application deadline with the user name of the registrant and details of the technical issue experienced. The applicant must provide:

(1) Details of the technical issue experienced;

(2) Screen capture(s) of the technical issues experienced along with corresponding *Grants.gov* ''Grant tracking number'';

(3) The ''Legal Business Name'' for the applicant that was provided in the SF–424;

(4) The AOR name submitted in the SF–424;

(5) The DUNS number associated with the application; and

(6) The *Grants.gov* Help Desk Tracking Number.

To ensure a fair competition of limited discretionary funds, the following conditions are not valid reasons to permit late submissions: (1) Failure to complete the registration process before the deadline; (2) failure to follow *Grants.gov* instructions on how to register and apply as posted on its website; (3) failure to follow all instructions in this notice of funding opportunity; and (4) technical issues experienced with the applicant's computer or information technology environment. After the Department reviews all information submitted and contacts the *Grants.gov* Help Desk to validate reported technical issues, DOT staff will contact late applicants to approve or deny a request to submit a late application through *Grants.gov*. If the reported technical issues cannot be validated, late applications will be rejected as untimely.

E. Application Review Information

1. Criteria

This section specifies the criteria that the Department will use to evaluate and award applications for Port Infrastructure Development Program Grants.

i. Leveraging of Federal Funding

To maximize the impact of Port Infrastructure Development Program grant awards, the Department seeks to leverage Port Infrastructure Development Program funding with non-Federal contributions. To evaluate this criterion, the Department will assign a rating to each project based on how the calculated non-Federal share of the project's future eligible project costs compares with other projects proposed for Port Infrastructure Development Program Grant funding. The Department will sort project applications' non-Federal leverage percentage from high to low, and the assigned ratings will be based on quintile: Projects in the 80th percentile and above receive the highest rating; the 60th–79th percentile receive the second highest rating; 40th–59th, the third highest; 20–39th, the fourth highest; and 0–19th, the lowest rating.

The project's non-Federal leverage percentage will be calculated based on the best available information provided by the applicant. In cases where the source of the funding is unclear, the funding will be treated as Federal for the purposes of this calculation.

Unlike how the Department evaluates cost share for eligibility purposes (as described in section C.2 of this notice), for the purposes of evaluating leverage as a competitive selection criterion, proceeds of Federal assistance under chapter 6 of Title 23, United States Code or sections 501 through 504 of the Railroad and Revitalization and Regulatory Reform Act of 1976 (Pub. L. 94–210), as amended, shall be considered to be part of the Federal share of project costs. Applications that require other discretionary funding from the Department to complete the project's funding package will be considered less competitive.

This evaluation criterion is separate from the statutory cost share requirements for Port Infrastructure Development Program Grants, which are described in Section C.2. Those statutory requirements establish the minimum permissible non-Federal share; they do not define a competitive Port Infrastructure Development Program Grant project.

ii. Project Costs and Benefits

The Department will consider the costs and benefits of projects seeking Port Infrastructure Development Program funding. To the extent possible, the Department will rely on quantitative, data-supported analysis to assess how well a project addresses this criterion, including an assessment of the project's estimated benefit-cost ratio and net benefits based on the applicant-supplied BCA described in Section D.2.v.

Based on the Department's assessment, the Department will group projects into ranges based on their estimated benefit costs ratio (BCR) and net present value (NPV), and assign a level of confidence associated with each project's assigned BCR and NPV ratings. The Department will use these ranges for BCR: Less than 1; 1–1.5; 1.5–3; and greater than 3. The Department will use these ranges for NPV: Less than $0; $0–$50,000,000; $50,000,000–$250,000,000; and greater than $250,000,000. The confidence levels are high, medium, and low.

iii. Project Outcomes

The Department will evaluate information described in Section D.2.vi to determine whether the project advances each of the following five project outcomes. Among otherwise comparable applications, one that advances at least one of these outcomes will be more competitive than one that does not.

(a) Advance technology supported safety, and design efficiency improvements by incorporating technology or innovative approaches to port safety, design, or efficiency.

(b) Improve state of good repair and resiliency by addressing current or projected vulnerabilities in the condition of port transportation facilities.

(c) Promote efficient energy trade by supporting the efficient movement of domestically-produced energy products and/or increasing national energy capacity.

(d) Promote manufacturing, agriculture, or other forms of exports by increasing the efficient movement of exports and/or increasing national export capacity.

(e) For only the top 15 coastal ports, support the safe flow of agricultural and food products, free of pests and disease, domestically and internationally.

iv. Demonstrated Project Readiness

The Department will consider project readiness to assess the likelihood of a successful project. In that analysis, the Department will consider significant risks to successful completion of a project, including risks associated with environmental review, permitting, technical feasibility, funding, and the applicant's capacity to manage project delivery. Risks do not disqualify projects from award, but competitive applications clearly and directly describe achievable risk mitigation strategies. The Department will assign one of three risk ratings based on the likelihood that the project will be successfully delivered within a reasonable timeframe: High risk means that there is a high likelihood that the project will not be successfully delivered; moderate risk means there is some possibility that the project will not be successfully delivery; and low risk means that it is highly likely that the project will be successfully delivered.

v. Domestic Preference

The Department will consider whether an exception/waiver of the Buy American provisions will be necessary to complete the project. Among otherwise comparable applications, projects that depend on materials or manufactured products that do not comply with domestic preference requirements will be less competitive than projects that comply with those requirements. Among otherwise comparable applications that require exceptions or waivers, an application that presents an effective plan to maximize domestic content will be more competitive than one that does not. The Department will not award projects that likely need a waiver but present no plan to maximize domestic content.

vi. Additional Considerations

The Department will consider the geographic diversity among applicants when selecting Port Infrastructure Development Program Grant awards, including whether the project is located in a qualified opportunity zone designated pursuant to 26 U.S.C. 1400Z–1. A project located in a qualified opportunity zone is more competitive than a similar project that is not located in a qualified opportunity zone.

In awarding grants from funds for the 15 coastal seaports that handled the greatest number of loaded foreign and domestic twenty-foot equivalent units of containerized cargo in 2016, as identified by the U.S. Army Corps of Engineers, the Department will give priority consideration for proposed projects that construct treatment facilities defined in section 305.1 of title 7, Code of Federal Regulations, to meet the phytosanitary treatment requirements of sections 305.5 through 305.8 of title 7, Code of Federal Regulations.

The Joint Explanatory Statement that accompanied the Consolidated Appropriations Act, 2019, directed the Department ''to ensure that any fully-automated cargo-handling equipment procured under [the Program] will not directly result in a net job loss or directly reduce the overall safety, reliability and efficiency of the port.'' For projects that incorporate fully automated cargo-handling equipment, the Department will consider job change that will result from the project, including whether the project will directly result in a net job loss.

2. Review and Selection Process

The Ports Program evaluation consists of Intake, a Technical Review Phase, and a Senior Review phase, each of which are described below. During the Technical Review Phase, Department staff analyze applications and provide ratings for the selection criteria, consistent with the descriptions in this NOFO. Based on this analysis, the Senior Review Team assembles a list of Projects for Consideration for selection by the Secretary based on the selection criteria described in Section E. The Secretary makes final selections based on the criteria described in Section E.

Throughout the review and selection process, the Department may seek additional information from an applicant related to project eligibility, whether the project can be completed with a reduced award, or data needed to complete project analysis.

3. Additional Information

Prior to award, each selected applicant will be subject to a risk assessment as required by 2 CFR 200.205. The Department must review and consider any information about the applicant that is in the designated integrity and performance system accessible through SAM (currently the Federal Awardee Performance and Integrity Information System (FAPIIS). An applicant may review information in FAPIIS and comment on any information about itself. The Department will consider comments by the applicant, in addition to the other information in FAPIIS, in making a judgment about the applicant's integrity, business ethics, and record of performance under Federal awards when completing the review of risk posed by applicants.

F. Federal Award Administration Information

1. Federal Award Notice

Following the evaluation outlined in Section E, the Department will announce awarded projects by posting a list of selected projects at *www.transportation.gov/Portgrants.* Notice of selection is not authorization to begin performance. Following that announcement, the Department will contact the point of contact listed in the SF 424 to initiate negotiation of the grant agreement for authorization.

2. Administrative and National Policy Requirements

The Department will determine the period of performance for each award based on the specific project that was evaluated and selected. DOT will administer each Port Infrastructure Development Program Grant pursuant to a grant agreement with the grant recipient. Amounts awarded as a grant under this notice that are not expended by the grant recipient shall remain available to DOT for use for grants under this program, either in the same or different fiscal year as this notice.

All awards will be administered pursuant to the Uniform Administrative Requirements, Cost Principles and Audit Requirements for Federal Awards found in 2 CFR part 200, as adopted by the Department of Transportation at 2 CFR part 1201. Additionally, applicable Federal laws, Executive Orders, and any rules, regulations, and requirements of the Maritime Administration will apply to the projects that receive Port Infrastructure Development Program Grants awards.

As expressed in Executive Orders 13788 of April 18, 2017 and 13858 of January 31, 2019, it is the policy of the executive branch to maximize, consistent with law, the use of goods, products, and materials produced in the United States in the terms and conditions of Federal financial assistance awards. Consistent with the requirements of Section 410 of the Transportation, Housing and Urban Development, and Related Agencies Appropriations Act, 2019 (Pub. L. 116–6, div. G, February 15, 2019), the Buy American requirements of 41 U.S.C. 8301–8305 apply to funds made available under this notice and other expenditures within the scope of the award, and all grant recipients must apply, comply with, and implement all provisions of the Buy American Act and related provisions in the grant agreement when implementing Port Infrastructure Development Program Grant projects. If selected for an award, grant recipients will be required to obtain approval from the Department before applying any Buy American Act exception. To obtain that approval, grant recipients must be prepared to demonstrate how they will maximize the use of domestic goods, products, and materials in constructing their project.

In connection with any program or activity conducted with or benefiting from funds awarded under this notice, recipients of funds must comply with all applicable requirements of Federal law, including, without limitation, the Constitution of the United States; the conditions of performance, nondiscrimination requirements, and other assurances made applicable to the award of funds in accordance with regulations of the Department of Transportation; and applicable Federal financial assistance and contracting principles promulgated by the Office of Management and Budget. In complying

with these requirements, recipients, in particular, must ensure that no concession agreements are denied or other contracting decisions made on the basis of speech or other activities protected by the First Amendment. If the Department determines that a recipient has failed to comply with applicable Federal requirements, the Department may terminate the award of funds and disallow previously incurred costs, requiring the recipient to reimburse any expended award funds.

Additionally, Federal wage rate requirements included in subchapter IV of chapter 31 of title 40, U.S.C., apply to all projects receiving funds under this program, and apply to all parts of the project, whether funded with Port Infrastructure Development Program grant funds, other Federal funds, or non-Federal funds.

Port Infrastructure Development Program projects involving vehicle acquisition must involve only vehicles that comply with applicable Federal Motor Vehicle Safety Standards and Federal Motor Vehicle Safety Regulations, or vehicles that are exempt from Federal Motor Carrier Safety Standards or Federal Motor Carrier Safety Regulations in a manner that allows for the legal acquisition and deployment of the vehicle or vehicles.

3. Reporting

This section of the notice provides general information about the reporting requirements that accompany Port Infrastructure Development Program Grant funding. Potential applicants should review these requirements to ensure that they can satisfy them if they receive an award. A recipient's failure to timely submit required reports may result in termination of an award and a legal requirement for the recipient to return funding to the Department.

i. Progress Reporting on Grant Activities

Each applicant selected for Port Infrastructure Development Program Grants funding must submit quarterly progress reports and Federal Financial Reports (SF–425) to monitor project progress and ensure accountability and financial transparency in the Port Infrastructure Development Program.

ii. Outcome Performance Reporting

Each applicant selected for Port Infrastructure Development Program Grant funding must collect information and report on the project's observed performance with respect to the relevant long-term outcomes that are expected to be achieved through construction of the project. Performance indicators will include formal goals or targets for a period determined by the Department. They will be used to evaluate and compare projects and monitor the results that grant funds achieve to the intended long-term outcomes of the Port Infrastructure Development Program. To the extent possible, performance indicators used in the reporting will align with the measures included in the application and will relate to at least one of the selection criteria defined in Section E and to a benefit estimated in the BCA. The Department expects that the level of performance will be consistent with estimates used in the applicant's BCA. Performance reporting continues for several years after project construction is completed, and the Department does not provide Port Infrastructure Development Program grant funding specifically for performance reporting. For each project selected for award, the Department, with input from the grant recipients, will identify the measures to be collected. Those measures and the reporting requirements will be formalized in the agreement obligating award funds for the project.

iii. Port Performance Reporting

The Department is required to report annually on port performance (see Sec. 6314 of the FAST Act). To help the Department more accurately assess port performance, Port Infrastructure Development Program grant recipients will be required to enter a data sharing agreement to submit to the Department information where consistent data related to the project, particularly on cargo throughput, is not publicly available and difficult to collect from Ports and port terminals. Data, which must originate from the port, that could be required as a condition of award includes the following:

- Total capacity of inbound and outbound cargo
- Total volume of inbound and outbound cargo
- Average number of lifts per hour of containers by crane
- Average vessel turn time by vessel type
- Average cargo or container dwell time
- Port storage capacity and utilization
- Modal throughput statistics, including rail and truck turn times
- Types of cargo moved
- Presences and location of intermodal connectors
- Physical size of the terminals within the port boundaries
- Maximum authorized channel depth and maximum actual/current channel depth
- Schedule vessel arrivals (for use in determining vessel on-time performance)
- Berth utilization

Details and definitions on the data elements described above will be provided in the data sharing agreement with the Department.

iv. Asset Management Report

A Port Infrastructure Development Program grant recipient that does not currently have an asset management plan in place will be required to include a post-construction reporting requirement utilizing the Asset Management Tool currently under development by the Maritime Administration. The reporting requirement should include both changes in operating cost and performance.

v. Reporting of Matters Related to Recipient Integrity and Performance

If the total value of a selected applicant's currently active grants, cooperative agreements, and procurement contracts from all Federal awarding agencies exceeds $10,000,000 for any period of time during the period of performance of this Federal award, then the applicant during that period of time must maintain the currency of information reported to the SAM that is made available in the designated integrity and performance system (currently FAPIIS) about civil, criminal, or administrative proceedings described in paragraph 2 of this award term and condition. This is a statutory requirement under section 872 of Public Law 110–417, as amended (41 U.S.C. 2313). As required by section 3010 of Public Law 111–212, all information posted in the designated integrity and performance system on or after April 15, 2011, except past performance reviews required for Federal procurement contracts, will be publicly available.

G. Federal Awarding Agency Contacts

For further information concerning this notice please contact the Port Infrastructure Development Program staff via email at *Ports@dot.gov,* or call or call Bob Bouchard, Director, Office of Port Infrastructure Development, at 202–366–5076. A TDD is available for individuals who are deaf or hard of hearing at 202–366–3993. In addition, the Department will post answers to questions and requests for clarifications at *www.transportation.gov/Portgrants.* To ensure applicants receive accurate information about eligibility or the program, the applicant is encouraged to contact DOT directly, rather than through intermediaries or third parties,

with questions. DOT may also conduct briefings on the Port Infrastructure Development Program Grants selection and award process upon request.

H. Other Information

1. Protection of Confidential Business Information

All information submitted as part of or in support of any application shall use publicly available data or data that can be made public and methodologies that are accepted by industry practice and standards, to the extent possible. If the applicant submits information that the applicant considers to be a trade secret or confidential commercial or financial information, the applicant must provide that information in a separate document, which the applicant may cross-reference from the application narrative or other portions of the application. For the separate document containing confidential information, the applicant must do the following: (1) State on the cover of that document that it ''Contains Confidential Business Information (CBI)''; (2) mark each page that contains confidential information with ''CBI''; (3) highlight or otherwise denote the confidential content on each page; and (4) at the end of the document, explain how disclosure of the confidential information would cause substantial competitive harm. DOT will protect confidential information complying with these requirements to the extent required under applicable law. If DOT receives a Freedom of Information Act (FOIA) request for the information that the applicant has marked in accordance with this section, DOT will follow the procedures described in its FOIA regulations at 49 CFR 7.29. Only information that is in the separate document, marked in accordance with this section, and ultimately determined to be confidential under § 7.29 will be exempt from disclosure under FOIA.

2. Publication/Sharing of Application Information

Following the completion of the selection process and announcement of awards, the Department intends to publish a list of all applications received along with the names of the applicant organizations and funding amounts requested. Except for the information properly marked as described in Section H.1., the Department may make application narratives publicly available or share application information within the Department or with other Federal agencies if the Department determines that sharing is relevant to the respective program's objectives.

Issued in Washington, DC, on June 11, 2019.

Elaine L. Chao,

Secretary.

[FR Doc. 2019–12871 Filed 6–17–19; 8:45 am]

BILLING CODE 4910–9X–P

DEPARTMENT OF THE TREASURY

Office of Foreign Assets Control

Notice of OFAC Sanctions Actions

AGENCY: Office of Foreign Assets Control, Treasury.

ACTION: Notice.

SUMMARY: The U.S. Department of the Treasury's Office of Foreign Assets Control (OFAC) is publishing the names of one or more persons that have been placed on OFAC's Specially Designated Nationals and Blocked Persons List based on OFAC's determination that one or more applicable legal criteria were satisfied. All property and interests in property subject to U.S. jurisdiction of these persons are blocked, and U.S. persons are generally prohibited from engaging in transactions with them.

DATES: See **SUPPLEMENTARY INFORMATION** section for effective date(s).

FOR FURTHER INFORMATION CONTACT: OFAC: Associate Director for Global Targeting, tel.: 202–622–2420; Assistant Director for Sanctions Compliance & Evaluation, tel.: 202–622–2490; Assistant Director for Licensing, tel.: 202–622–2480; or the Department of the Treasury's Office of the General Counsel: Office of the Chief Counsel (Foreign Assets Control), tel.: 202–622–2410.

SUPPLEMENTARY INFORMATION:

Electronic Availability

The Specially Designated Nationals and Blocked Persons List and additional information concerning OFAC sanctions programs are available on OFAC's website (*www.treas.gov/ofac*).

Notice of OFAC Actions

On June 12, 2019, OFAC determined that the property and interests in property subject to U.S. jurisdiction of the following persons are blocked under the relevant sanctions authorities listed below.

Entities

1. SOUTH WEALTH RESOURCES COMPANY (a.k.a. MANABEA THARWAT AL-JANOOB GENERAL TRADING COMPANY, LLC; a.k.a. SHIRKAT MANABI' THARAWAT AL-JANUB LILTIJARAH AL-'AMMAH; a.k.a. SOUTH WEALTH RESOURCES LTD.), Al Jadriya District, Baghdad, Iraq; Additional Sanctions Information—Subject to Secondary Sanctions [SDGT] [IRGC] [IFSR] (Linked To: ISLAMIC REVOLUTIONARY GUARD CORPS (IRGC)-QODS FORCE).

Designated pursuant to section 1(d)(i) of Executive Order 13224 of September 23, 2001, ''Blocking Property and Prohibiting Transactions With Persons Who Commit, Threaten to Commit, or Support Terrorism'' (E.O. 13224) for assisting in, sponsoring, or providing financial, material, or technological support for, or financial or other services to or in support of, IRGC–QODS FORCE, an entity whose property and interests in property are blocked pursuant to E.O. 13224.

Individuals

1. 'ABD AL-HAMID AL-ASADI, Makki Kazim (a.k.a. ABDUL HAMEED AL ASADI, Makki Kadhim), Basrah, Iraq; DOB 10 Oct 1957; Additional Sanctions Information—Subject to Secondary Sanctions (individual) [SDGT] [IRGC] [IFSR] (Linked To: ISLAMIC REVOLUTIONARY GUARD CORPS (IRGC)-QODS FORCE).

Designated pursuant to section 1(d)(i) of E.O. 13224 for assisting in, sponsoring, or providing financial, material, or technological support for, or financial or other services to or in support of, Iran's IRGC–QODS FORCE, an entity whose property and interests in property are blocked pursuant to E.O. 13224.

2. SALIH AL HASANI, Mohammed Hussein (a.k.a. AL-HUSAYNI, Mohammed Hossein); DOB 01 Jul 1954; Additional Sanctions Information—Subject to Secondary Sanctions; Passport A9298980 (Iraq) (individual) [SDGT] [IFSR] (Linked To: SOUTH WEALTH RESOURCES COMPANY).

Designated pursuant to section 1(c) of E.O. 13224 for acting for or on behalf of South Wealth Resources Company, an entity whose property and interests in property are blocked pursuant to E.O. 13224.

Dated: June 12, 2019.

Andrea M. Gacki,

Director, Office of Foreign Assets Control.

[FR Doc. 2019–12878 Filed 6–17–19; 8:45 am]

BILLING CODE 4810–AL–P

DEPARTMENT OF VETERANS AFFAIRS

[OMB Control No. 2900–0017]

Agency Information Collection Activity: VA Fiduciary's Account, Court Appointed Fiduciary's Account, and Certificate of Balance on Deposit and Authorization To Disclose Financial Records

AGENCY: Veterans Benefits Administration, Department of Veterans Affairs.

ACTION: Notice.

SUMMARY: Veterans Benefits Administration, Department of Veterans Affairs (VA), is announcing an opportunity for public comment on the proposed collection of certain information by the agency. Under the Paperwork Reduction Act (PRA) of 1995, Federal agencies are required to publish notice in the **Federal Register** concerning each proposed collection of information, including each proposed extension of a currently approved collection, and allow 60 days for public comment in response to the notice.

DATES: Written comments and recommendations on the proposed collection of information should be received on or before August 19, 2019.

ADDRESSES: Submit written comments on the collection of information through Federal Docket Management System (FDMS) at *www.Regulations.gov* or to Nancy J. Kessinger, Veterans Benefits Administration (20M33), Department of Veterans Affairs, 810 Vermont Avenue NW, Washington, DC 20420 or email to *nancy.kessinger@va.gov.* Please refer to ''OMB Control No. 2900–0017'' in any correspondence. During the comment period, comments may be viewed online through FDMS.

FOR FURTHER INFORMATION CONTACT: Danny S. Green at (202) 421–1354.

SUPPLEMENTARY INFORMATION: Under the PRA of 1995, Federal agencies must obtain approval from the Office of Management and Budget (OMB) for each collection of information they conduct or sponsor. This request for comment is being made pursuant to Section 3506(c)(2)(A) of the PRA.

With respect to the following collection of information, Veterans Benefits Administration invites comments on:

(1) Whether the proposed collection of information is necessary for the proper performance of Veterans Benefits Administration's functions, including whether the information will have practical utility; (2) the accuracy of Veterans Benefits Administration's estimate of the burden of the proposed collection of information; (3) ways to enhance the quality, utility, and clarity of the information to be collected; and (4) ways to minimize the burden of the collection of information on respondents, including through the use of automated collection techniques or the use of other forms of information technology.

Authority: Public Law 104–13; 44 U.S.C. 3501–3521.

Title: Supplement to VA Forms 21P–4706b, 21P–4706c and 21P–4718a.

OMB Control Number: 2900–0017.

Type of Review: Extension of a currently approved collection.

Abstract: VA maintains supervision of the distribution and use of VA benefits paid to fiduciaries on behalf of VA beneficiaries who are incompetent, a minor, or under legal disability. The forms are used to verify beneficiaries' deposit remaining at a financial institution against a fiduciary's accounting. The following forms will be used to ensure claimants' benefits payments are administered properly.

(a) VA Forms 21P–4706b and 4706c are used by VA to determine proper usage of benefits paid to fiduciaries. The 21P–4706c is provided to assist VA fiduciaries in conforming to requirements of various State courts.

(b) VA Form 21P–4718a—Fiduciaries are required to obtain certifications that the balances remaining on deposit in financial institutions as shown on accountings are correct. Certifying official at a financial institution completing the form must affix the institution's official seal or stamp. The data collected is used to confirm appointment of a fiduciary for a VA beneficiary and to prevent fiduciaries from supplying false certification, embezzling funds, and possibly prevent and/or identify fraud, waste and abuse of government funds paid to fiduciaries on behalf of VA beneficiaries.

Without this information, VA would be unable to determine if the veteran's fiduciary is properly using the funds for this benefit according to VA law.

Affected Public: Individuals and households.

Estimated Average Annual Burden: 11,166.67 hours.

Estimated Average Burden per Respondent: 20 minutes.

Frequency of Response: Annually.

Estimated Number of Respondents: 33,500.

By direction of the Secretary.

Danny S. Green,

Interim VA Clearance Officer, Office of Quality Performance and Risk Department of Veterans Affairs.

[FR Doc. 2019–12873 Filed 6–17–19; 8:45 am]

BILLING CODE 8320–01–P

FEDERAL REGISTER

Vol. 84 Tuesday,

No. 117 June 18, 2019

Part II

Department of the Treasury

Internal Revenue Service

26 CFR Part 1

Limitation on Deduction for Dividends Received From Certain Foreign Corporations and Amounts Eligible for Section 954 Look-Through Exception; Final Rule

DEPARTMENT OF THE TREASURY

Internal Revenue Service

26 CFR Part 1

[TD 9865]

RIN 1545–BO64

Limitation on Deduction for Dividends Received From Certain Foreign Corporations and Amounts Eligible for Section 954 Look-Through Exception

AGENCY: Internal Revenue Service (IRS), Treasury.

ACTION: Final temporary regulations.

SUMMARY: This document contains temporary regulations under section 245A of the Internal Revenue Code (the ''Code'') that limit the dividends received deduction available for certain dividends received from current or former controlled foreign corporations. This document also contains temporary regulations that limit the applicability of the exception to foreign personal holding company income for certain dividends received by upper-tier controlled foreign corporations from lower-tier controlled foreign corporations and temporary regulations under section 6038 to facilitate administration of certain rules in the temporary regulations. The temporary regulations affect certain U.S. persons that are domestic corporations that receive certain dividends from current or former controlled foreign corporations or are United States shareholders of upper-tier controlled foreign corporations that receive certain dividends from lower-tier controlled foreign corporations. The text of the temporary regulations also serves as the text of the proposed regulations set forth in a notice of proposed rulemaking published in the Proposed Rules section of this issue of the **Federal Register**.

DATES:

Effective date: These regulations are effective on June 18, 2019.

Applicability dates: For dates of applicability, see §§ 1.245A–5T(k), 1.954(c)(6)–1T(b), and 1.6038–2T(m).

FOR FURTHER INFORMATION CONTACT: Logan M. Kincheloe at (202) 317–6937 (not a toll-free number).

SUPPLEMENTARY INFORMATION:

Background

I. In General

This document contains amendments to 26 CFR part 1 under sections 245A, 954(c)(6), and 6038 (the ''temporary regulations''). Any terms used but not defined in this preamble have the meanings given them in the temporary regulations. Added to the Code by section 14101(a) of the Tax Cuts and Jobs Act (the ''Act''), section 245A generally allows a domestic corporation a 100-percent dividends received deduction (the ''section 245A deduction'') for the foreign-source portion of a dividend received after December 31, 2017, from a specified 10 percent-owned foreign corporation (an ''SFC''). Section 954, which predates the Act and remains in effect, generally provides that a dividend received by a controlled foreign corporation (a ''CFC''), as defined in section 957, is included in the CFC's foreign personal holding company income (''FPHCI''), as defined in section 954(c). Pursuant to section 954(c)(6), however, a dividend received by a CFC from a related CFC is not included in the CFC's FPHCI if certain requirements are satisfied (the ''section 954(c)(6) exception'').

The temporary regulations limit the availability of the section 245A deduction and the section 954(c)(6) exception in specific and narrow cases where the deduction or exception, respectively, effectively eliminates subpart F income or income subject to tax under section 951A from the U.S. tax system. Specifically, the temporary regulations address transactions that have the effect of avoiding tax under section 965, 951A, or 951 by inappropriately converting income that should have been subject to U.S. tax into nontaxed income. The temporary regulations also include rules under section 6038 to facilitate administration of certain rules in the temporary regulations. The temporary regulations do not include general rules relating to dividends eligible for the section 245A deduction; those rules will be included in separate guidance.

II. Scope of Participation Exemption

In order to transition to the new participation exemption system provided under section 245A and certain other provisions of the Act, the Act imposed a tax on certain earnings and profits of a U.S.-owned foreign corporation that had not previously been subject to U.S. tax. *See* section 965. Section 965 was designed to ensure that previously untaxed foreign income of the foreign corporation that accrued before the advent of the participation exemption system generally is subject to U.S. tax (although at a reduced rate). This transition tax applied to the last taxable year of the foreign corporation beginning before January 1, 2018, and generally increased the subpart F income of the foreign corporation by the amount of its previously untaxed earnings as of no later than December 31, 2017.

The Act's legislative history indicates congressional concern that the new participation exemption could heighten the incentive to shift profits to low-taxed foreign jurisdictions or tax havens absent base erosion protections. *See* Senate Committee on the Budget, 115th Cong., Reconciliation Recommendations Pursuant to H. Con. Res. 71, at 365 (Comm. Print 2017) (''Senate Explanation''). For example, without appropriate limits, domestic corporations might be incentivized to shift income to low-taxed foreign affiliates, ''where the income could potentially be distributed back to the [domestic] corporation with no U.S. tax imposed.'' *See id.*

This risk of base erosion is acute with respect to certain types of income, such as passive or mobile income and income derived from intangible property, which historically have posed transfer pricing challenges. To prevent base erosion, the Act retained the subpart F regime (section 951 et. seq.) and enacted a new regime under section 951A for global intangible lowed-taxed income (the ''GILTI regime''), both of which subject certain foreign income of a CFC to current U.S. taxation in the hands of the CFC's United States shareholders (within the meaning of section 951(b)) (each shareholder, a ''U.S. shareholder''). In order to avoid double taxation when a CFC distributes earnings and profits that have been taxed on a current basis to a U.S. shareholder, the earnings and profits are designated as ''previously taxed earnings and profits'' (also known as ''PTEP'') under section 959. Section 959 generally provides that PTEP are not subject to U.S. tax when distributed to a U.S. shareholder.

The subpart F regime, which was established under the Revenue Act of 1962, Public Law 87–834, sec. 12, 76 Stat. at 1006, subjects certain income earned by a CFC to U.S. taxation in the hands of the CFC's U.S. shareholders on a current basis at the full ordinary tax rate, regardless of whether the CFC distributes the earnings attributable to such income. H.R. Rep. No. 1447 at 58 (1962). In general, the subpart F regime applies to certain passive or highly mobile income in order to address base erosion concerns. Thus, for example, section 954(c) provides that subpart F income includes FPHCI. FPHCI includes certain types of passive or mobile income that are relatively easy to situate in tax-advantaged jurisdictions, such as dividends, interest, rents, and royalties.

The GILTI regime generally subjects a CFC's U.S. shareholders to current

taxation on intangible income earned by the CFC in a manner similar to the treatment of a CFC's subpart F income. *See* section 951A; *see also* Senate Explanation at 366 (explaining that such income is often associated with profit shifting). Intangible income is determined for this purpose on an aggregate basis at the U.S. shareholder level and is based on a formulaic approach under which a ''normal return'' equal to 10 percent of the basis of certain tangible assets is calculated and then each dollar of income above the ''normal return'' is effectively treated as intangible income (regardless of whether such income is actually attributable to intangible property). *See* Senate Explanation at 366. However, for purposes of this determination, certain income of the CFC—such as income taxed under another Code provision (for example, under the rules for subpart F income in sections 951 through 964 or under section 882 in the case of income effectively connected with the conduct of a U.S. trade or business), immobile income (such as foreign oil and gas extraction income), or highly taxed income that is excluded from subpart F income by reason of the high-tax exception of section 954(b)(4)—is not taken into account. *See also id.* (''[C]ertain items of income earned by CFCs should be excluded from the GILTI, either because they should be exempt from U.S. tax—as they are generally not the type of income that is the source of base erosion concerns—or are already taxed currently by the United States''). The CFC's U.S. shareholders are subject to current U.S. tax on the CFC's income in excess of the CFC's normal return, potentially at a reduced rate through a deduction under section 250, at the corporate U.S. shareholder level. The differing treatment under the GILTI regime with respect to excess returns (taxed currently, though potentially at a reduced rate) versus normal returns (exempt from tax) generally has the effect of differentiating between income that poses base erosion concerns and income that does not pose such concerns. The GILTI regime applies in the first taxable year of a CFC beginning on or after January 1, 2018. Section 245A applies to distributions made by SFCs (which include CFCs) on or after that date.

The rules under section 959 generally treat PTEP (including PTEP that arise by reason of the subpart F regime, the GILTI regime, or the transition tax under section 965) as being distributed before non-previously taxed earnings and profits and also prevent section 245A from applying to PTEP. *See* section 959(c) (providing ordering rules that treat PTEP as being distributed first) and section 959(d) (providing that a distribution of PTEP to a U.S shareholder is not treated as a dividend). Thus, both the interaction of the definitions of subpart F income and tested income with the ordering rules for distributions of PTEP and the overall structure of the international provisions of the Act contemplate that only residual earnings remaining after the potential application of sections 951(a), 951A, and 965 generally are eligible for the section 245A deduction. That is, section 245A(a) applies only to certain ''dividends'' received from foreign corporations. Therefore, sections 951(a), 951A, and 965 generally have priority over section 245A because, when they apply to a foreign corporation's earnings, distributions of those earnings do not qualify as dividends under section 959(d), and, therefore, section 245A does not apply.

The statutory text of the participation exemption system under section 245A, the GILTI regime, the subpart F regime, and the PTEP rules collectively operate as a comprehensive framework with respect to a CFC's foreign earnings after the application of the transition tax under section 965. A central feature of this regime is that income derived by CFCs is eligible for the section 245A deduction only if the earnings being distributed have not been first subject to the subpart F or GILTI regimes. The scope of the section 245A deduction (and the authority set forth in section 245A(g)) is thus informed not only by the text of section 245A in isolation, but also by the role of section 245A in the overall structure of the international provisions and its interaction with the subpart F and GILTI provisions.

Section 245A(g) provides that the Secretary shall issue such regulations as are necessary or appropriate to carry out the provisions of section 245A.

III. Scope of Section 954(c)(6)

Section 954(c)(6) was enacted by the Tax Increase Prevention and Reconciliation Act of 2005, Public Law 109–222. In general, and subject to certain limitations, the section 954(c)(6) exception is intended to facilitate intragroup foreign-to-foreign funds flows by providing that dividends, interest, rents, and royalties received or accrued by a CFC from another related CFC are not treated as FPHCI to the extent attributable or properly allocable to income of the related person which is neither subpart F income nor income treated as effectively connected with the conduct of a trade or business in the United States. *See* H.R. Rep. No. 109–304 at 45 (2005). Section 954(c)(6)(A) also provides that the Secretary shall prescribe such regulations as may be necessary or appropriate to carry out the provision, including regulations to prevent the abuse of the purposes of the provision. As most recently extended by the Consolidated Appropriations Act of 2016, Public Law 114–113, section 954(c)(6) applies to taxable years of foreign corporations beginning after December 31, 2005, and before January 1, 2020, and to taxable years of U.S. shareholders with or within which such taxable years of foreign corporations end.

Notice 2007–9, 2007–5 I.R.B. 401, provides guidance under section 954(c)(6). The notice describes additional guidance that the Treasury Department and the IRS intend to issue regarding the application of section 954(c)(6), including certain anti-abuse rules.

Explanation of Provisions

I. Overview

The transition tax, the subpart F and GILTI regimes, and the participation exemption under section 245A together form a comprehensive and closely integrated set of tax rules with respect to the earnings of foreign corporations with requisite levels of U.S. ownership. These related provisions must be read and interpreted together in order to ensure that each provision functions as part of a coherent whole, as intended. Although the section 245A deduction is generally available for untaxed foreign-source earnings, read collectively this integrated set of statutory rules can be reasonably understood to require that the deduction not apply to earnings and profits attributable to income of a type that is properly subject to the subpart F or GILTI regimes, which address base erosion-type income. Otherwise, as explained in Part II of this Explanation of Provisions, the section 245A deduction could undermine the anti-base erosion measures that Congress intended to prevent income shifting. Accordingly, and consistent with the coherent functioning of the interlocking statutory scheme for taxation of CFC earnings, the section 245A deduction generally will not apply to distributions of earnings and profits that are attributable to subpart F income or tested income. The interpretation reflected in these rules ensures that these provisions will operate compatibly with, not contradictorily to, each other.

Section 245A is designed to operate residually, such that the section 245A

deduction generally applies to any earnings of a CFC to the extent that they are not first subject to the subpart F regime, the GILTI regime, or the exclusions provided in section 245A(c)(3) (and were not subject to section 965). That is, the text of the subpart F and GILTI rules explicitly defines the types of income to which they apply, and section 245A applies to any remaining untaxed foreign earnings. Under ordinary circumstances, this formulation works appropriately, as earnings are first subject to the subpart F or GILTI regimes before the determination of dividends to which section 245A could potentially apply. However, in certain atypical circumstances, a literal application of section 245A (read in isolation) could result in the section 245A deduction applying to earnings and profits of a CFC attributable to the types of income addressed by the subpart F or GILTI regimes—the specific types of earnings that Congress described as presenting base erosion concerns. These circumstances arise when a CFC's fiscal year results in a mismatch between the effective date for GILTI and the final measurement date under section 965 or involve unanticipated interactions between section 245A and the rules for allocating subpart F income and GILTI when there is a change in ownership of a CFC. Moreover, the Treasury Department and the IRS are aware that some taxpayers are undertaking transactions with a view to eliminating current or future taxation of all foreign earnings of a CFC, including earnings attributable to base erosion-type income, by structuring into these situations. These transactions have the potential to substantially undermine the anti-base erosion framework for post-2017 foreign earnings.

Based on the structure and history of the international provisions of the Code, including changes made by the Act, the Treasury Department and the IRS have concluded that section 245A was not intended to eliminate taxation with respect to the foreign earnings of a CFC that are attributable to income of a type that is subject to taxation under the subpart F or GILTI regimes. In these cases where the literal effect of section 245A would reverse the intended effect of the subpart F and GILTI regimes, this conflict is best resolved, and the structure of the statutory scheme is best preserved, by limiting section 245A's effect. The Treasury Department and the IRS do not believe Congress intended section 245A to defeat the purposes of subpart F and GILTI regimes in these instances. Accordingly, given the authority in section 245A(g) directing the Secretary to issue such regulations as are necessary or appropriate to carry out the provisions of section 245A, and the authority under section 7805(a) to issue rules and regulations made necessary by reason of changes in the tax laws, the temporary regulations under section 245A are designed to ensure that the section 245A deduction operates properly within the context of a closely coordinated set of rules and, as a result, is not available to eliminate the taxation of subpart F income and tested income in these limited circumstances. However, consistent with the broad application of section 245A, the temporary regulations apply only to certain well-defined circumstances in which subpart F or tested income earned by a CFC would otherwise escape taxation to its U.S. shareholders as a result of the unanticipated interaction of section 245A and certain rules applicable to the inclusion of subpart F income and GILTI under sections 951(a) and 951A, respectively.

To prevent the avoidance of U.S. tax in these specific and narrow circumstances, the temporary regulations limit the section 245A deduction only with respect to certain dividends received by a domestic corporation in connection with specific transactions that facilitate the avoidance of taxation of subpart F income or tested income and that, in many cases, may have been entered into with a purpose of avoiding the consequences of the new international tax regime as adopted by Congress in the Act. This limited denial ensures that the section 245A deduction will continue to apply to earnings and profits that are attributable to all other classes of income to which Congress intended them to apply. The Treasury Department and the IRS emphasize, however, that when the requirements of section 245A as properly construed are satisfied, it would not be permissible under the statute for the section 245A deduction to be denied for these other classes of income—even if, for example, taxpayers choose to generate such income to avail themselves of the benefits of the deduction. The Treasury Department and the IRS furthermore do not believe it would be permissible to modify the definition of subpart F income or tested income, or to recharacterize income as subpart F income or tested income, under the authority of section 245A(g).

Similar to section 245A, the exemption from subpart F income under section 954(c)(6) can be used in the context of certain transactions to avoid taxation of income that would otherwise be taxed under the subpart F or GILTI regimes. Such transactions are not dependent upon the availability of section 245A at the level of the United States shareholder. This type of concern was first generally described in Notice 2007–9, but has been exacerbated by the enactment of section 951A as part of the Act because (1) dividends qualifying for section 954(c)(6) generally are not treated as tested income pursuant to section 951A(c)(2)(A)(i)(IV); and (2) the same structured transactions used to avoid subpart F inclusions can also be used to avoid GILTI inclusions. Given the authority in section 954(c)(6)(A) for the Treasury Department and the IRS to issue regulations preventing the abuse of section 954(c)(6), the temporary regulations under section 954(c)(6) are designed to ensure that the section 954(c)(6) exception is not used to erode the U.S. tax base through certain transactions preventing the taxation of income that would otherwise be taxed under the subpart F or GILTI regimes. Consistent with the temporary regulations issued under section 245A, these rules are targeted to ensure that the section 954(c)(6) exception is not available for this limited category of earnings.

II. Limitation of Amounts Eligible for Section 245A Deduction

A. Scope

In the case of a dividend received by a domestic corporation from an SFC, the temporary regulations limit the amount of the section 245A deduction to the portion of a dividend not constituting an ''ineligible amount.'' *See* § 1.245A–5T(b). In general, the ineligible amount is the sum of (i) 50 percent of the portion of a dividend attributable to certain earnings and profits resulting from transactions between related parties during a period after the measurement date under section 965(a)(2) and in which the SFC was a CFC but during which section 951A did not apply to it (referred to as the ''extraordinary disposition amount'') and (ii) the portion of a dividend attributable to certain earnings and profits generated during any taxable year ending after December 31, 2017, in which the domestic corporation reduces its ownership of the CFC (referred to as the ''extraordinary reduction amount'').

B. Extraordinary Disposition Amount

Under the Act, there may be a gap between when section 951A first applies to the U.S. shareholders of a CFC (as of its first taxable year beginning after December 31, 2017) and the last date on which the earnings and profits of the CFC are measured for purposes of

section 965, which, under section 965(a), is December 31, 2017 (such period, the ''disqualified period''). For example, a fiscal year CFC with a taxable year ending November 30 would have a disqualified period from January 1, 2018, the day after its final E&P measurement date under section 965, to November 30, 2018, the last date before section 951A applies with respect to its income. The Treasury Department and the IRS are aware that during the disqualified period, CFCs may have engaged in certain transactions with related parties with a goal of creating stepped-up basis for the buyer, while generating earnings and profits for the seller CFC that are not subject to any current tax and may be eligible for the section 245A deduction. Because the transactions generally are structured to avoid creating subpart F income and occur during the disqualified period, the income from these transactions generally is not subject to U.S. tax under the transition tax under section 965, the subpart F regime, or the GILTI regime. Such earnings and profits could, for example, reduce taxable gain that would otherwise be recognized on the subsequent disposition of stock of the CFC, thus potentially allowing the CFC and its future earnings to be removed from the U.S. tax system without the imposition of any U.S. tax.

The Treasury Department and the IRS have determined that it would be inconsistent with the closely interdependent set of international tax rules implemented by the Act, specifically the transition tax, the GILTI regime, and the participation exemption, for the earnings and profits resulting from these transactions to be eligible for a section 245A deduction even if the other requirements of section 245A are otherwise satisfied. Thus, the temporary regulations limit the amount of the section 245A deduction allowed to a section 245A shareholder (as defined in § 1.245A–5T(i)(21)) with respect to a dividend received from an SFC. Specifically, the deduction is limited to 50 percent of the extraordinary disposition amount, which is the portion of a dividend received by a section 245A shareholder from an SFC that is paid out of the section 245A shareholder's ''extraordinary disposition account.'' *See* § 1.245A–5T(b)(2) and (c)(1). In general, this account represents the shareholder's pro rata share of the SFC's ''extraordinary disposition E&P,'' reduced by the section 245A shareholder's prior extraordinary disposition amounts, if any. *See* § 1.245A–5T(c)((3)(i)(C)(*1*)). Extraordinary disposition E&P is an amount equal to the earnings of an SFC arising from gain recognized by reason of one or more ''extraordinary dispositions.'' *See* § 1.245A–5T(c)(3)(i)(C).

The section 245A deduction is limited to 50 percent of the extraordinary disposition amount to reflect the fact that taxpayers generally would have been eligible for a deduction under either (i) section 250(a)(1)(B) had section 951A applied to the SFC during the disqualified period or (ii) section 965(c) had the net gain been subject to the transition tax under section 965.

For a disposition by an SFC to be an extraordinary disposition, the disposition must (i) be of specified property (defined in § 1.245A–5T(c)(3)(iv) as any property other than property that produces gross income described in section 951A(c)(2)(A)(i)(I) through (V)), (ii) occur during the SFC's disqualified period (as defined in § 1.245A–5T(c)(3)(iii)) and when the SFC was a CFC, (iii) be outside of the ordinary course of the SFC's activities, and (iv) be to a related party. *See* § 1.245A–5T(c)(3)(ii). For these purposes, a disposition by an SFC includes certain indirect dispositions by the SFC through a partnership or other pass-through entities (including through ownership structures involving tiered pass-through entities). *See id.*

In addition, pursuant to an exception intended to limit compliance and administrative burdens, no dispositions by an SFC are considered to be an extraordinary disposition if they do not exceed a threshold of the lesser of $50 million or 5 percent of the gross value of the SFC's property. *See* § 1.245A–5T(c)(3)(ii)(E).

The temporary regulations provide a facts-and-circumstances rule for determining whether a disposition occurs outside of the ordinary course of an SFC's activities. The temporary regulations also provide a per se rule that a disposition is treated as outside of the ordinary course of an SFC's activities if the disposition is undertaken with a principal purpose of generating earnings and profits during the disqualified period or if the disposition is of intangible property, within the meaning of section 367(d)(4). *See id.* The temporary regulations include this latter rule because the disposition of intangible property is not an ordinary course transaction (relative to, for example, a routine sale of raw materials from one SFC to another for manufacturing); moreover, during the disqualified period taxpayers may have had a particularly strong incentive to dispose of intangible property (which often has low basis) to generate significant amounts of earnings and profits to the seller (without being subject to current tax) that may be eligible for the section 245A deduction.

As described, the Treasury Department and the IRS have determined that the extraordinary disposition rules should not apply to all earnings and profits generated by a CFC during the disqualified period. Rather, the temporary regulations focus on a narrowly and objectively defined class of earnings and profits in circumstances that are inconsistent with the international tax regime adopted by the Act. The Treasury Department and the IRS request comments on whether there should be any further refining of these rules.

The temporary regulations provide shareholder account rules to ensure that a section 245A shareholder's extraordinary disposition account is properly tracked and reduced in appropriate cases (for example, for prior extraordinary disposition amounts). *See* § 1.245A–5T(c)(3)(i). These shareholder account rules also contain successor rules for a section 245A shareholder that acquires stock of an SFC from another section 245A shareholder with respect to which there is an extraordinary disposition account and for certain section 381 transactions and distributions involving section 355 (or so much as section 356 as relates to section 355). *See* § 1.245A–5T(c)(4).

To address cases in which the section 245A deduction might be available for an SFC held through a pass-through entity or foreign corporation, the temporary regulations provide that a section 245A shareholder is treated as owning a pro rata share of stock of an SFC that is owned by a partnership, trust, or estate (domestic or foreign), or a foreign corporation in which the section 245A shareholder owns an interest or stock, as applicable. *See* § 1.245A–5T(g)(3)(i) (providing rules for stock ownership and transfers).

The Treasury Department and the IRS request comments as to how the extraordinary disposition account rules should apply in circumstances in which an SFC is transferred to a partnership, including the extent to which principles similar to section 704(c)(1)(B) apply to prevent the use of partnerships to circumvent the purposes of the temporary regulations, such as where an SFC is subsequently transferred to a non-contributing partner. As a general matter, the Treasury Department and the IRS believe that § 1.701–2(b), as well as the judicial doctrines of economic substance, substance over form, and step transaction, prevent taxpayers from

forming or availing of partnerships with a principal purpose of avoiding the application of these rules. The treatment of partnerships under section 245A will be addressed in separate guidance; and it is anticipated that this guidance will provide rules ensuring that partnerships may not be formed or availed of to avoid the purposes of the temporary regulations.

The Treasury Department and the IRS further request comments on the treatment of consolidated groups under the temporary regulations, including for purposes of maintaining extraordinary disposition accounts. The Treasury Department and the IRS believe that consolidated groups generally should be treated in the same manner as a single taxpayer for the purposes of § 1.245A–5T(c). Subject to any comments received, it is expected that future rules will provide that consolidated groups generally should not be advantaged or disadvantaged as a result of owning directly or indirectly stock of an SFC through multiple members relative to a standalone corporation owning the same stock.

The Treasury Department and the IRS also request comments on whether and how the rules applicable to disqualified basis in proposed § 1.951A–2(c)(5) should be coordinated with § 1.245A–5T(c). In this regard, proposed § 1.951A–2(c)(5) provides rules for the allocation and apportionment of deductions and losses attributable to disqualified basis, which is asset basis created in certain disqualified transfers during the disqualified period. These deductions and losses are allocated and apportioned solely to gross income that is not tested income, subpart F income, or effectively connected income (defined as ''residual CFC gross income''), thereby ensuring that such ''costless'' tax basis does not inappropriately reduce future tax liability. Thus, the Treasury Department and the IRS are considering the extent to which it would be appropriate to coordinate the two sets of rules, taking into account the ability of the IRS to administer and taxpayers to comply with such rules, and request comments on this issue.

C. Extraordinary Reduction Amount

The Treasury Department and the IRS are aware that certain transactions in which a section 245A shareholder of a CFC transfers stock of the CFC, or certain transactions in which the shareholder's ownership of the CFC is diluted, could give rise to results that would be inconsistent with the integrated structure of the U.S. tax system for the taxation of CFC earnings, including section 245A, the subpart F regime, and the GILTI regime. In these cases, absent proper limitation, the section 245A deduction might be allowed inappropriately with respect to a CFC's current year income that, but for the ownership changes, would have been subject to tax under the subpart F or GILTI regimes. Unlike the transactions described in Part II.B of this Explanation of Provisions, the transactions giving rise to these results can occur in any taxable year ending after the Act (and particularly section 245A) is in effect.

These results could arise, for example, as a consequence of the application of section 951(a)(2)(B). Section 951(a)(2)(B), a longstanding provision in the subpart F regime, prevents double taxation of the same earnings by reducing a U.S. shareholder's pro rata share of subpart F income (or, following the Act, tested income as defined in section 951A(c)(2)(A)) of a CFC by dividends received by another person with respect to the same share of stock. However, if section 245A were to apply without limitation to dividends from a CFC that reduce another U.S. shareholder's pro rata share of subpart F income or tested income of the CFC under section 951(a)(2)(B), earnings that would otherwise be subject to the subpart F or GILTI regimes would escape U.S. taxation to the extent of the reduction. For example, in the case of a transfer of CFC stock from one section 245A shareholder (the transferor) to another section 245A shareholder (the transferee), a dividend (including by reason of section 1248) from the CFC to the transferor during the tax year of the transfer might both (i) be excluded from the transferor's income by reason of the section 245A deduction and (ii) reduce the transferee's pro rata share of subpart F income or tested income of the CFC by reason of section 951(a)(2)(B). The Treasury Department and the IRS have determined that it would be inconsistent with the residual definition of section 245A eligible earnings and the interaction of section 245A and the subpart F and GILTI regimes, which form an integrated set of rules to tax post-2017 foreign earnings, to allow a section 245A deduction for a dividend paid out of earnings and profits attributable to subpart F income or tested income where such dividends, by operation of section 951(a)(2)(B), and could result in double non-taxation of such income. Such a result would also be contrary to the legislative intent underlying the interaction of these provisions. *See* Senate Explanation at 365 (noting, in the absence of rules such as the new GILTI regime, the incentive to shift income to low-taxed foreign affiliates, ''where the income could potentially be distributed back to the [domestic] corporation with no U.S. tax imposed.'').

Similar results can arise in other cases where the stock of a CFC is transferred during a CFC's tax year by a U.S. shareholder to a foreign person where, after the transfer, the CFC remains a CFC but has no U.S. shareholder that owns (within the meaning of section 958(a)) stock of the CFC. Before the Act, section 958(b)(4) prevented certain attribution of stock under section 318 from a foreign person to a U.S. person. However, the Act repealed section 958(b)(4) such that a foreign corporation may be treated as a CFC despite having no direct or indirect U.S. shareholder that owns (within the meaning of section 958(a)) stock of the CFC and that accordingly can recognize an income inclusion under section 951 or 951A. In general, a U.S. shareholder that owns stock in a CFC on the last day within the foreign corporation's year that it is a CFC is taxable on its pro rata share of the CFC's subpart F income or tested income for purposes of the GILTI regime. However, by reason of the Act's repeal of section 958(b)(4), a U.S. shareholder may transfer a CFC to a person that will not be taxed with respect to an inclusion under the subpart F or GILTI regimes without itself being subject to such an inclusion. Absent any specific limitation in these circumstances, any earnings and profits of the CFC distributed as a dividend (including by reason of section 1248) to the transferor U.S. shareholder during the CFC's taxable year might be eligible for the section 245A deduction. However, had the transfer not occurred (or had the CFC ceased to be a CFC as a result of the transfer), the earnings and profits may have been subject to tax under the subpart F or GILTI regimes and, therefore, would not have been eligible for the section 245A deduction.

In the circumstances described in this section, a broad application of section 245A would present taxpayers with a planning opportunity to completely avoid the application of the subpart F and GILTI regimes on an annual basis. The Treasury Department and the IRS have determined that this result would undermine the integrated provisions constituting the Act's framework for taxing post-2017 CFC earnings and would contravene legislative intent. To address this concern, the temporary regulations limit the amount of the section 245A deduction allowed to a ''controlling section 245A shareholder'' with respect to a dividend from a CFC

to the portion of the dividend that is paid out of earnings other than the ''extraordinary reduction amount.'' *See* § 1.245A–5T(b)(1) and (e). A controlling section 245A shareholder of a CFC is a section 245A shareholder of the CFC that, taking into account ownership of the CFC by certain other persons (such as related persons), owns more than 50 percent of the stock of the CFC. *See* § 1.245A–5T(i)(2). For purposes of applying these rules, a controlling section 245A shareholder also includes any other shareholder who would not otherwise be a controlling section 245A shareholder but acts in concert with the controlling section 245A shareholder. This includes shareholders that sell their shares of the same CFC to the same buyer or buyers (or a related party with respect to the buyer or buyers) as part of the same plan as the controlling section 245A shareholder's extraordinary reduction.

Under the temporary regulations, for an extraordinary reduction amount to exist with respect to a controlling section 245A shareholder of a CFC, an ''extraordinary reduction'' must occur during the CFC's taxable year with respect to the shareholder's ownership of the CFC. *See* § 1.245A–5T(e). An extraordinary reduction generally occurs when either (i) the controlling section 245A shareholder transfers more than 10 percent of its stock of the CFC (for example, an extraordinary reduction occurs if the shareholder owns 90 percent of the stock of the CFC and it transfers stock representing more than nine percent of the stock of the CFC) or (ii) there is a greater than ten percent change in the controlling section 245A shareholder's overall ownership of the CFC (for example, if the shareholder owns 90 percent of the stock of the CFC and, as a result of an issuance to a foreign person, the shareholder's ownership of the CFC is reduced such that it no longer owns at least 81 percent of the stock of the CFC). *See* § 1.245A–5T(e)(2)(i)(A). The temporary regulations include the first prong because if, for example, a section 245A shareholder of a CFC were to transfer shares of stock of the CFC to another section 245A shareholder of the CFC and the other shareholder were to transfer an equal number of similar shares to the first shareholder, neither of the shareholders' overall ownership of the CFC would change, but the amount taken into account by each of the shareholders by reason of section 951(a)(2)(B) might be reduced as a result of dividends paid with respect to shares transferred by the other.

An extraordinary reduction amount is earnings and profits representing the amount of dividends paid by the corporation that are attributable to subpart F income or tested income with respect to a CFC, to the extent such subpart F income or tested income (i) would have been taken into account by the controlling section 245A shareholder under section 951 or 951A had the extraordinary reduction not occurred and (ii) is not taken into account by a domestic corporation or a citizen or resident of the United States (that is, a person described in section 7701(a)(30)(A) or (C)). *See* § 1.245A–5T(e)(1) and (2).

The limitation of the section 245A deduction in the case of an extraordinary reduction will generally result in a dividend being included in the income of the controlling section 245A shareholder and not offset by a section 245A deduction. In cases where the CFC has tested income during its taxable year that would have been subject to the GILTI regime but for the extraordinary reduction, a controlling section 245A shareholder might prefer to have an income inclusion under section 951A, potentially benefitting from the deduction available under section 250. Therefore, the temporary regulations provide an election under which a controlling section 245A shareholder is not required to reduce its section 245A deduction if it elects (and, in some cases, certain other United States persons also agree) to close the CFC's taxable year for all purposes of the Code on the date of the extraordinary reduction. *See* § 1.245A–5T(e)(3)(i). The closing of the taxable year of the CFC results in all U.S. shareholders that own (within the meaning of section 958(a)) stock of the CFC on such date taking into account their pro rata share of subpart F income or tested income earned by the CFC as of that date.

In addition, pursuant to an exception intended to limit compliance and administrative burdens, for a taxable year in which an extraordinary reduction occurs, no amount is considered an extraordinary reduction amount if the sum of the CFC's subpart F income and tested income for the taxable year does not exceed the lesser of $50 million or 5 percent of the CFC's total income for the year. *See* § 1.245A–5T(e)(3)(ii).

D. Coordination Rules

To address cases in which a dividend could qualify as either a hybrid dividend under the rules of section 245A(e) or an ineligible amount under the temporary regulations, the temporary regulations provide a coordination rule pursuant to which a dividend is first subject to the hybrid dividend rules of section 245A(e) and then, to the extent not a hybrid dividend, is subject to the temporary regulations. *See* § 1.245A–5T(g)(3)(iv). In future guidance relating to proposed regulations under section 245A(e) and certain other sections (83 FR 67612), the Treasury Department and the IRS anticipate modifying those regulations to reflect this coordination rule.

In addition, to address cases in which a dividend might be either an extraordinary disposition amount under § 1.245A–5T(c) or an extraordinary reduction amount under § 1.245A–5T(e), the temporary regulations provide a coordination rule pursuant to which a dividend is first subject to the rules of § 1.245A–5T(e) and then, to the extent not an extraordinary reduction amount, is subject to the rules of § 1.245A–5T(c). *See* § 1.245A–5T(g)(5). Because of this ordering rule, the extraordinary disposition amount with respect to a dividend will not exceed the amount by which the dividend exceeds the extraordinary reduction amount with respect to the dividend.

E. Transactions Described in Section 964(e)(4)

The rules in these temporary regulations for determining eligibility for the section 245A deduction also apply to deemed dividends arising by reason of section 964(e)(4), which the Act added to the Code. Section 964(e)(4) provides in certain cases that a sale by a CFC of stock of another foreign corporation is treated as a dividend from the target foreign corporation to the selling CFC that is, in turn, treated as subpart F income of the selling CFC and included in the gross income of the U.S. shareholders of the selling CFC. Pursuant to section 964(e)(4)(A)(iii), the section 245A deduction is allowed to any U.S. shareholder with respect to such subpart F income included in gross income in the same manner as if such subpart F income were a dividend received by the shareholder from the selling CFC. Thus, section 964(e)(4) presents the same concerns as direct dividends; absent a rule to the contrary, taxpayers might use section 964(e)(4) to avoid the results applicable to actual distributions from an upper-tier CFC to a U.S. shareholder or to constructive dividends under section 1248 that are addressed elsewhere by these temporary regulations. Therefore, the rules in these temporary regulations for determining eligibility for the section 245A deduction also apply to deemed dividends arising by reason of section 964(e)(4). Moreover, all U.S. shareholders of the selling CFC are

deemed to act in concert for purposes of the temporary regulations with respect to transactions described in section 964(e)(4).

III. Limitation of Amount Eligible for Section 954(c)(6) Exception With Respect to Certain Dividends

A. In General

As described in Part I of this Explanation of Provisions, the section 954(c)(6) exception may cause dividends from one CFC to another to result in tax consequences similar to, but not dependent upon, those that can be effectuated using section 245A in conjunction with the disqualified period, section 951(a)(2)(B), or the repeal of section 958(b)(4).

To protect against avoidance of the rules for extraordinary dispositions (described in Part II.B of this Explanations of Provisions), the temporary regulations rely on authority under section 954(c)(6)(A) to prevent the section 954(c)(6) exception from applying in cases where a dividend from a lower-tier CFC to an upper-tier CFC would be an extraordinary disposition amount if distributed directly to the section 245A shareholders of the lower-tier CFC. *See* § 1.245A–5T(d). In these cases, the section 954(c)(6) exception applies only to the extent that the amount of the dividend exceeds the sum of each section 245A shareholder's extraordinary disposition account with respect to the lower-tier CFC, divided by the aggregate ownership of all U.S. tax residents of the upper-tier CFC that have section 951(a) inclusions and multiplied by 50 percent. The amount is divided by the aggregate ownership of these U.S. tax residents to take into account the fact that the U.S. tax residents (including individuals) will include in gross income a pro rata share of the portion of the dividend not eligible for the section 954(c)(6) exception. The amount is multiplied by 50 percent in order to provide similar treatment for a dividend received by a section 245A shareholder from a CFC and a dividend received by an upper-tier CFC from a lower-tier CFC. In both cases, the 50 percent reduction of the section 245A deduction approximates the reduced tax rate by reason of the deduction provided under section 250(a)(1)(B) with respect to section 951A inclusions or section 965(c) with respect to the transition tax.

Unlike the disallowance of the section 245A deduction under § 1.245A–5T(b) with respect to an extraordinary disposition amount, which applies only to corporate U.S. shareholders, the limitation to the application of the section 954(c)(6) exception with respect to a dividend received by an upper-tier CFC can result in a subpart F inclusion to any U.S. shareholder, including individuals. In addition, the temporary regulations limit the section 954(c)(6) exception in these cases, rather than limiting the application of section 245A only when the lower-tier CFC earnings and profits are distributed through intervening CFCs to a section 245A shareholder. This approach prevents deferral of tax with respect to the applicable subpart F income or tested income and minimizes the administrative and compliance burdens that would be created by continuing to track the relevant earnings at the upper-tier CFC.

Similarly, to prevent these inappropriate uses of the section 954(c)(6) exception to avoid the rules for extraordinary reductions (described in Part II.C of this Explanation of Provisions), the temporary regulations apply to limit the amount of any distribution from that CFC out of earnings and profits attributable to subpart F income or tested income that can qualify for the section 954(c)(6) exception in a taxable year in which an extraordinary reduction occurs with respect to the stock of a CFC. Similar to the rules relating to extraordinary disposition amounts, the limitation to the section 954(c)(6) exception with respect to a dividend received by an upper-tier CFC can result in a subpart F inclusion to any U.S. shareholder, including individuals. To the extent a CFC-to-CFC dividend otherwise satisfies the requirements of section 954(c)(6), it is eligible for the section 954(c)(6) exception only to the extent it exceeds the distributing lower-tier CFC's ''tiered extraordinary reduction amount,'' taking into account certain prior inclusions under section 951(a). *See* § 1.245A–5T(f)(1). Such amount is equal to the upper-tier CFC's ownership percentage in the lower-tier CFC multiplied by the lower-tier CFC's subpart F income and tested income for the taxable year, with the resulting product reduced by four amounts. The first amount is the pro rata share of the lower-tier CFC's subpart F income and tested income for the taxable year that is taken into account by U.S. tax residents and attributable to the shares of the lower-tier CFC owned by the upper-tier CFC. The second amount is the amount included in an upper-tier CFC's subpart F income resulting from prior dividends paid by the lower-tier CFC giving rise to tiered extraordinary reduction amounts or the application of section 245A(e). The third amount is for certain prior extraordinary reduction amounts with respect to the lower-tier CFC arising in cases in which the lower-tier CFC was a first-tier CFC at some point in the taxable year and paid a dividend to one or more controlling section 245A shareholders at that time. The fourth amount is for subpart F income and tested income taken into account by a U.S. tax resident as a result of an issuance of stock directly by the lower-tier CFC during the taxable year. *See* § 1.245A–5T(f)(2). Comments are requested as to whether a lower-tier CFC's tiered extraordinary reduction amount should be reduced for a pro rata portion of a dividend paid on stock of the lower-tier CFC that was held by non-U.S. shareholders before and after an extraordinary reduction. For purposes of applying § 1.245A–5T(f)(1) and (2) in taxable years of a lower-tier CFC beginning on or after January 1, 2018, and ending before June 14, 2019, a transition rule is provided such that the tiered extraordinary reduction amount of a lower-tier CFC is determined by treating the lower-tier CFC's subpart F income for the taxable year as if it were neither subpart F income nor tested income. *See* § 1.245A–5T(f)(3).

The rule in § 1.245A–5T(f)(1) applies to both actual distributions and deemed distributions that occur by reason of stock dispositions subject to section 964(e)(1) but not section 964(e)(4). Dispositions subject to section 964(e)(1) but not section 964(e)(4) are treated as dividends from the target foreign corporation (or other entity whose earnings and profits gave rise to a dividend under section 964(e)(1)) to the selling CFC and, thus, must be tested for eligibility under section 954(c)(6). Additionally, ordering and coordination rules apply with respect to the rules relating to the availability of the section 954(c)(6) exception and generally mirror the rules for the section 245A deduction by giving priority to § 1.245A–5T(f) over § 1.245A–5T(d). *See* § 1.245A–5T(g)(4)(ii). As in the rules relating to extraordinary reduction amounts, a controlling section 245A shareholder of a lower-tier CFC may elect to close the taxable year of the CFC in cases where an extraordinary reduction occurs and the CFC would have a tiered extraordinary reduction amount. *See* § 1.245A–5T(e).

Finally, the Treasury Department and the IRS are studying whether § 1.245A–5T(f), or a similar rule, should also apply to dividends received by an upper-tier CFC from a lower-tier CFC where such CFCs are owned by individuals and there may be a reduction in the individuals' ownership of the lower-tier CFC. Individuals are

not eligible to claim deductions under section 245A and, therefore, dividends subject to section 954(c)(6) do not present the risk of permanently eliminating items of subpart F income, investments in United States property taxed under section 951(a)(1)(B), or tested income from the U.S. tax base. At the same time, section 954(c)(6) dividends might result in a reduction of a U.S. shareholder's pro rata share of a CFC's subpart F income or tested income, thereby resulting in deferred taxation of items that otherwise would have been taxed currently. Therefore, comments are requested as to whether § 1.245A–5T(f), or a similar rule, should be extended to CFCs owned by individuals.

B. Dividends Received by CFCs Ineligible for Section 245A Deduction

Section 245A(a), by its terms, applies only to certain dividends received by ''a domestic corporation.'' Section 1.952–2, however, which sets forth rules for determining gross income and taxable income of a foreign corporation, provides that for these purposes a foreign corporation is treated as a domestic corporation. *See* § 1.952–2(a)(1) and (b)(1). Accordingly, questions have arisen as to whether § 1.952–2 could be interpreted such that a foreign corporation could claim a section 245A deduction despite the statutory restriction in section 245A(a) expressly limiting the deduction to domestic corporations. *See* H.R. Rep. No. 115–466, at 599, fn. 1486 (2017).

The Treasury Department and the IRS intend to address issues related to the application of § 1.952–2, taking into account various comments received in connection with the Act, including in connection with the proposed section 951A regulations, in a future guidance project. This guidance will clarify that, in general, any provision that is expressly limited in its application to domestic corporations does not apply to CFCs by reason of § 1.952–2. The Treasury Department and the IRS continue to study whether, and to what extent, proposed regulations should be issued that provide that dividends received by a CFC are eligible for a section 245A deduction. The Treasury Department and the IRS have determined, however, that in no case would any person, including a foreign corporation, be allowed a section 245A deduction directly or indirectly for the portion of a dividend paid to a CFC that is not eligible for the section 954(c)(6) exception as a result of these temporary regulations. Permitting the deduction in such a case would undermine the application of the rule that reduces the amount of the dividend eligible for the section 954(c)(6) exception (discussed in Part III.A of this Explanation of Provisions).

IV. Information Reporting Under Section 6038

Under section 6038(a)(1), U.S. persons that control foreign business entities must file certain information returns with respect to those entities, which includes information listed in section 6038(a)(1)(A) through (a)(1)(E), as well as information that ''the Secretary determines to be appropriate to carry out the provisions of this title.'' The temporary regulations provide that ineligible amounts, tiered extraordinary disposition amounts, and tiered extraordinary reduction amounts must be reported on the appropriate information reporting form in accordance with section 6038. *See* § 1.6038–2T(f)(16). Because transactions subject to these temporary regulations may have occurred in taxable years for which returns have been filed before the issuance of these regulations, or for which returns will be filed before revision of forms and instructions for reporting the information required by § 1.6038–2T(f)(16), the temporary regulations provide a transition rule. The transition rule mandates that taxpayers report the required information on the first return filed following the issuance of revised forms, instructions, or other guidance with respect to reporting such information. The transition rule also requires a corporation to report the information with respect to a predecessor corporation (such as a lower-tier foreign corporation that distributes its assets to the corporation in a liquidation described in section 332) to ensure that all of the amounts are properly reported notwithstanding any intervening transactions.

V. Applicability Dates

Consistent with the applicability date of section 245A, and pursuant to section 7805(b)(2), the rules in the temporary regulations relating to eligibility of distributions for the section 245A deduction apply to distributions occurring after December 31, 2017.

Pursuant to section 7805(b)(1) and (2), the rules in the temporary regulations relating to the eligibility of dividends for the section 954(c)(6) exception also apply to distributions occurring after December 31, 2017, subject to the transition rule in § 1.245A–5T(f)(3) for determining tiered extraordinary reduction amounts.

VI. Good Cause

The Treasury Department and the IRS are issuing these temporary regulations without prior notice and the opportunity for public comment pursuant to section 553(b)(3)(B) of the Administrative Procedure Act (the ''APA''), which provides that advance notice and the opportunity for public comment are not required with respect to a rulemaking when an ''agency for good cause finds (and incorporates the finding and a brief statement of reasons therefor in the rules issued) that notice and public procedure thereon are impracticable, unnecessary, or contrary to the public interest.'' Under the ''public interest'' prong of 5 U.S.C. 553(b)(3)(B), the good cause exception appropriately applies where notice-and-comment would harm, defeat, or frustrate the public interest, rather than serving it. The Treasury Department and the IRS are similarly utilizing the good cause exception in section 553(d)(3) of the APA to issue these temporary regulations with an immediate effective date, rather than an effective date no earlier than 30 days after the date of publication.

Among the circumstances in which the good cause exception may be invoked for impracticability or to serve the public interest are situations where the timing and disclosure requirements of the usual procedures would defeat the purpose of the proposal, including if announcement of a proposed rule would enable or increase the sort of financial manipulation the rule sought to prevent. Good cause may also apply where a delayed effective date would have a significant deleterious effect upon the parties to which the regulation applies. Additionally, the good cause exception may apply when the regulations are by their nature short term and there is an opportunity to comment before final rules are introduced. Finally, good cause is supported where regulations are required to be issued and effective by a certain statutory deadline, and in light of the circumstances affecting the agency and its functions leading up to that statutory deadline, the agency is unable during that timeframe to conduct a timely and fulsome notice-and-comment process. Here, these rationales, separately and in combination, provide good cause for the Treasury Department and the IRS's decision to bypass the notice-and-comment and delayed effective date requirements with respect to these temporary regulations. Each rationale is discussed below in turn.

First, good cause exists with respect to these temporary regulations because any period for notice and comment, as well as a delayed effective date, would provide taxpayers with the opportunity to engage in the transactions to which these rules relate with confidence that they achieve the intended tax avoidance results absent the applicability of the regulations. The Treasury Department and the IRS are aware that taxpayers have considered engaging in the transactions described in these temporary regulations, but some may have been deterred from doing so because of uncertainty about the operation and interaction of the various provisions of the Act. By limiting the deduction under section 245A for these transactions, these temporary regulations remove that uncertainty and—if subjected to notice-and-comment and a delayed effective date—could embolden some taxpayers to engage in aggressive tax planning to take advantage of the unintended interactions among the Act's provisions, with the comfort that their actions were not subject to the rules of the temporary regulations during the period of notice and comment and before the regulations' effective date. This concern applies with respect to both the extraordinary disposition and extraordinary reduction rules for an ongoing period. For the extraordinary reduction rules, both the extraordinary reduction and the associated use of section 245A can occur at any time going forward, and although the gap period for entering into extraordinary dispositions has closed, the ability to utilize the section 245A deduction for earnings generated in the extraordinary disposition would apply indefinitely absent these temporary regulations.

For example, a taxpayer who became aware of the tax effects achievable using the transactions described in these temporary regulations could, with confidence, utilize extraordinary disposition E&P or engage in an extraordinary reduction to exit the U.S. taxing jurisdiction without paying any tax during a period of notice and comment and delayed effectiveness. The proliferation of these types of transactions would cause the regulations to exacerbate the very financial manipulation that they are intended to prevent, and accordingly, this rationale supports a finding of good cause for dispensing with pre-promulgation notice and public comment, as well as foregoing a delayed effective date, for these temporary regulations pursuant to 5 U.S.C. 553(b) and (d).

The second reason for a finding of good cause arises from the fact that these temporary regulations, as applied retroactively, will affect taxable years of certain taxpayers ending in 2018. As a result, these regulations can apply to taxable years for which tax returns have been or may be due during a period of comment and delayed effectiveness. Deferring the effectiveness of the temporary regulations until after such a period could increase taxpayer compliance costs because certain taxpayers would only be able to come into compliance with the regulations by amending and refiling returns and paying additional taxes owed with interest.

Third, good cause is supported where a regulation is temporary, with public comment permitted and meaningfully considered before finalization of the temporary rule. In this regard, the temporary regulations have a fixed expiration date and are cross-referenced in a notice of proposed rulemaking published in the Proposed Rules section of this issue of the **Federal Register**. Comments are requested on all aspects of these rules, and specific comment requests contained in this preamble are incorporated by reference into the cross-referenced notice of proposed rulemaking. The Treasury Department and the IRS will consider all written comments properly and timely submitted when finalizing these temporary regulations.

Finally, these temporary regulations are part of an effort to implement the provisions of the Act, which effected sweeping and complex statutory changes to the international tax regime. In conjunction with developing and issuing these temporary regulations, the Treasury Department and the IRS have also been tasked with issuing regulations implementing the numerous provisions enacted or modified by the Act, along with attendant changes to forms and other sub-regulatory guidance and attention to the orderly administration of the U.S. tax system.

Good cause exists for the issuance of temporary regulations relating to the transactions affected by these temporary regulations partially because of the statutory deadline in section 7805(b)(2), which provides (among other rules) that a regulation may be applied retroactively if it is issued within 18 months of the date of enactment of the statutory provision to which it relates. The rules in these temporary regulations relate to sections 245A, 951A, and 965, which were enacted as part of the Act on December 22, 2017. Thus, to qualify for retroactivity under section 7805(b)(2), a regulation retroactive to the enactment of these provisions must be effective no later than June 22, 2019. These temporary regulations need to apply retroactively from the date of the underlying statutory provisions to ensure that the international tax regime enacted by Congress in the Act, and its interaction with existing tax rules, functions correctly for all affected periods. Retroactivity is also required to prevent treating taxpayers comparatively advantageously if they have engaged in the types of transactions described in these temporary regulations prior to the issuance date of these temporary regulations.

The discussion of good cause with respect to the temporary regulations in this Part VI is consistent with the Policy Statement on the Tax Regulatory Process issued on March 5, 2019, by the Treasury Department and the IRS (the ''Statement''). The Statement emphasized the Treasury Department and the IRS's obligation under the APA to issue interim final regulations without prior notice and comment only in conjunction with ''a statement of good cause explaining the basis for that finding.'' The Statement further explains that good cause for interim final regulations may exist, for example, where ''such regulations may be necessary and appropriate to stop abusive practices or to immediately resolve an injurious inconsistency between existing regulations and a new statute or judicial decision.'' As the discussion in this Part VI illustrates, this is the case with respect to these temporary regulations.

Special Analyses

I. Regulatory Planning and Review—Economic Analysis

Executive Orders 13563 and 12866 direct agencies to assess costs and benefits of available regulatory alternatives and, if regulation is necessary, to select regulatory approaches that maximize net benefits (including potential economic, environmental, public health and safety effects, distributive impacts, and equity). Executive Order 13563 emphasizes the importance of quantifying both costs and benefits, of reducing costs, of harmonizing rules, and of promoting flexibility.

These temporary regulations have been designated by the Office of Management and Budget's Office of Information and Regulatory Affairs (OIRA) as subject to review under Executive Order 12866 pursuant to the Memorandum of Agreement (April 11, 2018) between the Treasury Department

and the Office of Management and Budget regarding review of tax regulations. OIRA has determined that the proposed rulemaking is significant and subject to review under Executive Order 12866 and section 1(b) of the Memorandum of Agreement. Accordingly, the proposed regulations have been reviewed by the Office of Management and Budget.

A. Background

The Tax Cuts and Jobs Act (the Act) transitioned the United States from a primarily deferral-based international tax system (subject to the immediate taxation of generally mobile or passive income under the subpart F regime) to a participation exemption system coupled with immediate taxation of certain offshore earnings (in some cases, at a reduced rate of tax).[1] This transition was effected through several interlocking provisions of the Code—sections 245A, 951A, and 965. All three provisions have different effective dates and thus the Act created periods in which some but not all of them apply. The new system also operates alongside the pre-Act subpart F regime that taxes certain offshore earnings using a longstanding rule for attributing pro rata shares of a foreign corporation's earnings to its U.S. shareholders.

1. Background: Section 245A—Dividends Received Deduction

The Act included section 245A, which provides a participation exemption system for repatriation of certain offshore earnings. Prior to the Act, dividends paid by foreign corporations to their U.S. shareholders were generally taxable. Section 245A(a) reverses this result in the case of corporate U.S. shareholders by providing, subject to certain exceptions, a 100-percent deduction for any dividend received by a corporate U.S. shareholder from a specified 10-percent owned foreign corporation.[2] A 100-percent deduction for dividends essentially means that this income is not taxed in the United States at the corporate level. The existing rules in sections 951(a) and 959 continue to apply, meaning that generally only earnings associated with income that is not taxed under the subpart F regime (or under the GILTI regime, discussed below) can, upon distribution, give rise to a dividend eligible for the section 245A deduction. Because subpart F (and GILTI) taxation is not reduced by distributions made during the year (except in the case of certain transfers of stock of a CFC during a taxable year), any distribution of earnings and profits that is taxed under the subpart F regime (or GILTI regime) is a distribution of PTEP (that is, a distribution of previously taxed earnings and profits) that is not treated as a dividend by reason of section 959(d), and thus cannot qualify for section 245A. Section 245A applies to distributions made after December 31, 2017.

Because the pre-Act international tax regime imposed U.S. tax on most non-mobile, non-passive earnings and profits only when those earnings were repatriated, a significant amount of untaxed earnings and profits had been accumulated offshore when the Act was passed. The enactment of section 245A by the Act thus presented a potential windfall, allowing taxpayers who had held earnings and profits offshore to distribute all of those earnings back to the United States tax-free. Congress did not intend for section 245A to apply to such pre-Act earnings, and thus included a so-called transition tax (section 965) ''[t]o avoid a potential windfall for corporations that deferred income, and to ensure that all distributions from foreign subsidiaries are treated in the same manner under the participation exemption system.'' H. Rep. No. 115–409 at 375.

2. Background: Section 965—Transition Tax

Section 965 imposed a transition tax on the post-1986 earnings and profits of foreign corporations that had gone untaxed under the pre-Act international tax regime and would not be subject to the GILTI regime because the income was earned in a year prior to that regime being in effect. Absent section 965, such earnings and profits would have been eligible for tax-free distribution under section 245A. Specifically, section 965(a) increases certain foreign corporations' subpart F income for their last taxable year beginning before January 1, 2018, by the amount of their non-previously taxed earnings and profits computed as of no later than December 31, 2017. This has the effect of subjecting all offshore post-1986 untaxed earnings of most U.S. shareholders as of no later than December 31, 2017, to U.S. tax (albeit at a reduced rate by reason of section 965(c)), turning all such earnings into PTEP under section 959. As a result, none of those earnings and profits are eligible for the section 245A deduction, and such earnings and profits, once taxed under section 965, are instead treated in the same way as if they had been taxed under the pre-Act subpart F regime.

For a calendar year CFC, the transition tax generally provides a mechanism for ensuring that only earnings and profits subject to the new international tax system can qualify for the dividends received deduction under section 245A. This appears to be the intended purpose of section 965(a), as the legislative history of the Act provides that ''[t]he [transition tax applies in] the last taxable year of a deferred foreign income corporation that begins before January 1, 2018, which is that foreign corporation's last taxable year before the transition to the new corporate tax regime elsewhere in the bill goes into effect.'' H. Rep. 115–466 at 613. This is not the case, however, for fiscal year CFCs (*i.e.,* CFCs with a taxable year other than the calendar year) as there is a gap period with respect to such entities during which certain of their earnings may escape taxation.

3. Background: Section 951A—GILTI Regime

By subjecting post-1986 earnings and profits to a transition tax, section 965 was generally intended to ensure that only earnings first subjected to the anti-base erosion provisions of the Act could qualify for section 245A. While the Act preserved the existing subpart F regime, legislative history shows congressional concern that the participation exemption system could heighten the incentive to shift profits to low-taxed foreign jurisdictions or tax havens after the Act. *See* Senate Explanation at 365. For example, Congress expressed concern that a domestic corporation might allocate income susceptible to base erosion to certain foreign affiliates ''where the income could potentially be distributed back to the [domestic] corporation with no U.S. tax imposed.'' *See id.* As a result of these concerns, the Act added another, complementary regime to address the additional base erosion incentives engendered by the participation exemption. This regime taxes a U.S. shareholder on its global intangible low-taxed income, or GILTI, with respect to its CFCs at a reduced

[1] A deferral-based system is a system in which taxable foreign-source income generally is taxed only when it is repatriated to the United States. A participation exemption system is one in which foreign-source income is generally not taxed by the resident country (in this case, the United States). As explained further below, in the United States the participation exemption system is coupled with immediate taxation of certain types of earnings to avoid erosion of the U.S. tax base. These taxed foreign earnings can then be repatriated to the United States without further tax.

[2] A specified 10-percent owned foreign corporation is any foreign corporation, other than a passive foreign investment corporation with respect to a shareholder that is not also a CFC, with at least one corporate U.S. shareholder. Section 245A(b).

rate (by reason of section 250) under new section 951A.

Section 951A(a) generally subjects a U.S. shareholder to current taxation each year on its GILTI with respect to its CFCs. The GILTI of a U.S. shareholder is generally defined as its pro rata share of its CFCs' taxable income for the year in excess of a normal return—a formulaic amount equal to 10 percent of the tax basis of the CFCs' tangible assets. *See* section 951A(b), (c), (d). For purposes of this determination, specific types of income of a CFC, including income taxed under another Code provision (including the subpart F regime), certain immobile income, or certain highly taxed income, are not taken into account. *See* Senate Explanation at 366 (explaining that such income is either already taxed or does not present base erosion concerns). The GILTI regime applies in the first taxable year of a CFC beginning after December 31, 2017. Thus, in the case of calendar year CFCs, the application of the GILTI regime generally must be taken into account with respect to all new earnings and profits of a CFC earned immediately after section 965 has caused all of the CFC's pre-Act earnings to be taxed. *See* Public Law 115–97, sec. 14201(d).

As is the case with respect to the subpart F regime, the tax base subject to the GILTI regime is not reduced by distributions made by a CFC during a taxable year (except in the case of certain transfers of stock of a CFC during a taxable year), and section 951A(f)(1)(A) provides that an income inclusion under the GILTI regime is treated in the same manner as an inclusion of subpart F income under the subpart F regime for purposes of section 959. These rules cause a CFC's earnings attributable to GILTI to be taxed under the GILTI regime in section 951A regardless of whether those earnings and profits are distributed before the end of the CFC's year, thus converting such earnings into PTEP and turning distributions (including those made before the end of the year in which the earnings and profits were earned) by the CFC into PTEP distributions that do not constitute dividends eligible for section 245A. Section 959(c), (d). Section 951(a)(2) also applies for purposes of determining a U.S. shareholder's pro rata share of its CFCs' income and other relevant items for purposes of section 951A. Section 951A(e).

B. Need for the Temporary Regulations

Sections 245A, 965, and 951A generally act to tax foreign source income equivalently across taxpayers and sources so long as a U.S. shareholder owns the same amount of stock of a calendar year CFC throughout the CFC's entire taxable year. Deviations from that condition, however, potentially allow taxpayers to avoid tax by claiming a section 245A deduction in situations where otherwise identical income would be subject to U.S. tax. This circumstance is inconsistent with the purposes of the new international tax regime enacted by Congress.[3] These temporary regulations are needed to limit section 245A to its intended scope and, thereby, prevent the provision from converting income that should be subject to U.S. tax into non-taxable dividends.

There are two situations in which deviations from the condition described in this section can give rise to these results. These are where (1) a U.S. corporation is the shareholder of a fiscal year CFC during 2018 and (2) a CFC pays a dividend and experiences a direct or indirect change in ownership during a taxable year.

The differing application of the GILTI regime with respect to fiscal year and calendar year CFCs creates one scenario where the interaction of section 245A with other new international tax provisions might be used to avoid tax. For a calendar year CFC, any earnings and profits accumulated as of no later than December 31, 2017, that had not been taxed under the subpart F regime generally were taxed under section 965 in the CFC's 2017 taxable year, turning such earnings and profits into PTEP. Then, starting in the calendar year CFC's taxable year beginning on January 1, 2018, the CFC's income became subject to the complementary subpart F and new GILTI regimes, and any income taxed under those provisions now also becomes PTEP. Concurrent with the applicability date of the GILTI regime, section 245A applies to dividends distributed after December 31, 2017, out of earnings that have not been taxed under the subpart F and GILTI regimes. These interlocking provisions create a cohesive regime in which the section 245A deduction applies only for distributions of post-2017 earnings and profits that are properly not taxed as the subpart F income or GILTI regimes. Operating in tandem, these provisions address Congress's concerns with section 245A by applying that provision (1) without granting windfalls for taxpayers that had historically kept earnings and profits offshore (by taxing all such earnings and profits under section 965 immediately before section 245A applies) and (2) without allowing a section 245A deduction for income susceptible to a heightened risk of base erosion. As a result of these provisions, only post-2017 earnings and profits that are not subject to the subpart F or GILTI regimes can qualify for a dividends received deduction under section 245A upon distribution from a calendar year CFC. Such earnings and profits are generally the normal return on a CFC's property (*i.e.,* 10 percent of tax basis in tangible property), certain immobile income, or certain highly-taxed income that Congress believed would not raise windfall or base erosion concerns.

By contrast, the provisions that apply harmoniously to a calendar year CFC fail to form a cohesive regime when applied to a fiscal year CFC for its first taxable year that ends in 2018. Consider a CFC with a taxable year ending November 30. This CFC's income is still subject to the subpart F regime for all relevant taxable years. Section 965 also applies to the CFC's historical earnings and profits as of no later than December 31, 2017, and section 245A applies to distributions made by the CFC after December 31, 2017. However, the GILTI regime does not begin to apply to the CFC's income until the first taxable year of the CFC beginning after December 31, 2017, and thus does not first apply until the CFC's taxable year that begins on December 1, 2018. As a result of the gap in these effective dates, (1) the ordinary earnings of the CFC during the gap period avoid tax (which is a direct outgrowth of the effective dates); and (2) assets can be transferred between related parties in non-ordinary course transactions during that time period in such a way that current and future earnings and profits associated with the built-in gain in those assets can permanently avoid taxation by the United States because they are not subject to the GILTI regime and are not subject to the transition tax under section 965. Such earnings and profits might nevertheless be eligible to be distributed tax-free under section 245A. Such income, however, is economically identical to income earned by a calendar year CFC. Absent the temporary regulations, similar income from CFCs that differ only in their taxable year would be subject to different taxation. This difference between calendar year and fiscal year CFCs is significant and presents the potential for substantial tax avoidance when utilized to artificially generate earnings and profits in non-ordinary course transactions between related parties.

[3] The discussion herein assumes that the transactions at issue would otherwise withstand scrutiny under section 7701(o) (*i.e.,* the economic substance doctrine) and related judicial doctrines. Taxpayers should draw no inferences from this assumption, however, as the IRS may challenge such transactions on these and other grounds.

These temporary regulations refer to the portion of a dividend attributable to earnings and profits arising from such a transaction during this period as an ''extraordinary disposition amount.'' An extraordinary disposition amount consists of certain earnings and profits resulting from transactions between related parties during the disqualified period. *See* the Explanation of Provisions section of this preamble for definitions of all relevant terms and conditions. Although the period during which extraordinary dispositions may have occurred has passed, the regulations will potentially apply to any distributions of the associated earnings and profits after 2017.

The second issue occurs because the application of the allocation rules under sections 951(a) and 951A (which determine a U.S. shareholder's pro rata share of a CFC's subpart F income or tested income for GILTI purposes) together with section 245A creates situations in which earnings and profits may not be properly subject to the new international tax regime that Congress enacted to prevent the inappropriate application of the section 245A deduction. For example, this situation may arise because of the ''dividend offset'' rule in section 951(a)(2)(B), which, subject to certain limitations, reduces a U.S. shareholder's pro rata share of subpart F income or tested income for dividends paid to another owner of the same stock of the CFC during the taxable year (such reduction being a rough approximation of the portion of subpart F income and tested income for the year that is properly attributable to the other owner).

In order to illustrate this concern, consider the following example. A corporate U.S. shareholder generally is taxed with respect to a CFC's subpart F income as of the end of the CFC's taxable year. Suppose, however, that the U.S. shareholder received a dividend from the CFC in an amount equal to its subpart F income and thereafter transferred ownership of the CFC to a new U.S. shareholder shortly before the end of the CFC's taxable year. If a section 245A deduction applied to the dividend, the corporate U.S. shareholder would not be taxed on the distribution. Furthermore, the second U.S. shareholder's subpart F inclusion for the CFC's taxable year may be reduced to approximately zero as a result of the dividend offset rule. As a consequence, absent the application of these temporary regulations, income that should have been subject to U.S. taxation under the subpart F regime could escape taxation altogether.

In contrast to the first issue, this second issue implicates the interlocking provisions of the international tax regime on an ongoing basis. As described in Part II.C of the Explanation of Provisions section of this preamble, section 245A could facilitate the avoidance of the subpart F and GILTI regimes by allowing a U.S. shareholder to transfer, before the end of a CFC's taxable year, stock of the CFC to a new shareholder who will not be taxed on the CFC's subpart F income or tested income. As a consequence of the repeal of section 958(b)(4), this new shareholder might be a foreign person who is not taxable with respect to the CFC's subpart F income or tested income. Alternatively, the new shareholder may not be taxable with respect to these amounts as a result of the dividend offset rule of section 951(a)(2)(B), notwithstanding the fact that if the prior owner of the stock is a corporate U.S. shareholder, the section 245A deduction may apply to dividends received by such prior owner. In these cases, current year subpart F income and GILTI could escape taxation altogether, a result that would undermine the post-Act system for taxing foreign earnings. These temporary regulations refer to earnings and profits representing the portion of a dividend of a CFC attributable to subpart F income or tested income of the CFC that, absent a transfer of stock of the CFC pursuant to an extraordinary reduction, would have been subject to the subpart F or GILTI regimes as an ''extraordinary reduction amount.'' An extraordinary reduction amount consists of certain earnings and profits generated during a CFC's taxable year beginning after 2017 in which a domestic corporate U.S. shareholder reduces its ownership of the CFC by certain threshold amounts (*e.g.,* a decrease in ownership of more than 10 percent). For this purpose, ''certain earnings and profits'' refers to income generally subject to inclusion under the subpart F or GILTI regimes. See the Explanation of Provisions section of this preamble for definitions of all relevant terms and conditions.

Results similar to the ones described in this section for extraordinary disposition amounts and extraordinary reduction amounts can be achieved using the exemption from subpart F income under section 954(c)(6) and lower-tier CFC dividends to upper-tier CFCs. Accordingly, the temporary regulations limit the application of the section 954(c)(6) exception in order to prevent similar results in circumstances in which a lower-tier CFC pays a dividend to another CFC, instead of directly to a U.S. shareholder.

C. Overview of the Temporary Regulations

The Treasury Department and the IRS have determined that it is appropriate to limit the section 245A deduction to distributions of earnings and profits that are attributable to certain normal return, high-taxed, or immobile income, which will ensure that similar income is taxed similarly. The temporary regulations do not permit section 245A deductions for the portions of dividends made by CFCs that are attributable to ineligible amounts, which comprise extraordinary reduction amounts and 50percent of any extraordinary disposition amounts.

To accomplish this, the temporary regulations disallow a deduction for transactions that have the effect of avoiding tax under section 951, 951A, or 965. The extraordinary disposition rules accomplish this by denying the deduction under section 245A for a narrowly and objectively defined class of earnings and profits generated by transactions undertaken in the disqualified period in circumstances that raise abuse concerns. The extraordinary reduction rules accomplish this by denying the deduction under section 245A for certain earnings distributed in the same year as reductions in ownership of CFC stock by a controlling section 245A shareholder. The temporary regulations contain similar rules with respect to section 954(c)(6).

D. Economic Analysis of the Temporary Regulations

1. Baseline

The Treasury Department and the IRS have assessed the benefits and costs of the temporary regulations relative to a no-action baseline reflecting anticipated Federal income tax-related behavior in the absence of these temporary regulations.

2. Summary of Economic Effects

To assess the economic effects of these regulations, the Treasury Department and the IRS considered the economic effects of disallowing the 245A deduction for (i) extraordinary disposition amounts and (ii) extraordinary reduction amounts.

The disallowance of the dividends received deduction for extraordinary disposition amounts applies, in plain language, only to earnings and profits accrued prior to issuance of the temporary regulations. Thus, no substantive economic activities can be affected by this disallowance and the

economic decisions affected are only those associated with taxpayers' financing of their tax liability.

The Treasury Department and the IRS's analysis therefore focuses on those provisions of the temporary regulations that disallow the dividends received deduction for extraordinary reduction amounts. Absent the temporary regulations, U.S. taxation of income of a CFC that would otherwise be subject to the subpart F or GILTI regime could be avoided by a transfer of ownership of the CFC to other entities in such a way that the income of the CFC would not be subject to U.S. tax. Thus, the economic effects stem from those transfers that would give rise to an extraordinary reduction amount (''ER transfers'') and that would not be undertaken as a result of the temporary regulations. The Treasury Department and the IRS project that a substantial portion of these ER transfers would have been undertaken for tax avoidance purposes only and would have negative effects on economic performance (giving rise to a positive economic effect from the temporary regulations) but that those effects would be minor because the transfers would take place among related parties and over short time frames. Thus, there would be only negligible losses in economic performance due to inefficient changes in management, risk-bearing, or other economic activity. Instead, the primary economic losses due to these transfers (and thus gains from the temporary regulations) are likely to consist of resources that would be expended in carrying out such tax planning activities. The Treasury Department and the IRS project that these saved resource costs would be small.

The Treasury Department and the IRS considered that at least some ER transfers that would not be pursued as a result of the temporary regulations would have provided positive economic benefits, such as through more efficient risk-bearing or other managerial control benefits. The Treasury Department and the IRS project that the aggregate value of these foregone benefits will be minimal because the transfers for which a deduction is disallowed and that are likely not to be undertaken as a result of the temporary regulations are not generally associated with productive economic activities. In this regard, the Treasury Department and the IRS expect that economically-motivated transfers of CFCs should not be inhibited by the temporary regulations because the temporary regulations, taking into account the election to close a CFC's taxable year, often will result in the same or similar tax liability to a seller as if the transfer had not occurred. Thus, the temporary regulations should not discourage economically-motivated transfers of CFCs. If anything, the temporary regulations will discourage transfers of CFCs that would not have occurred absent the tax results the temporary regulations seek to prevent. These transfers, which would be motivated by tax avoidance, likely would not be economically productive.

The temporary regulations will require taxpayers to compute, track, and report information relevant for determination of extraordinary dispositions and extraordinary reductions. The compliance burden component of the Treasury Department and the IRS's estimate of the economic effects of the temporary regulations reflects only those record-keeping and related compliance activities that would not have been undertaken in the absence of the temporary regulations. The Treasury Department and the IRS project that these additional costs, relative to the baseline, will be modest. In general, with respect to the initial year of an extraordinary disposition or any extraordinary reduction, taxpayers are already required to keep track of the required information for other purposes. For example, to the extent that a U.S. taxpayer sells stock in its CFC, earns income in its CFC, or receives a dividend from a CFC, the taxpayer would otherwise record the information needed to determine eligibility for the section 245A deduction under the temporary regulations. Additionally, once calculated the costs to track amounts related to extraordinary dispositions in future years are expected to be minimal. For all of these reasons, the Treasury Department and the IRS expect the non-revenue economic effects of these temporary regulations to be small.[4]

The Treasury Department and the IRS have not undertaken a quantitative estimate of the economic benefits arising from avoided transactions that constitute extraordinary reductions. Any such estimates would be highly uncertain because these tax provisions are new and because the transfers would be between related parties and primarily of short duration, both of which factors make estimation difficult. The tax planning costs of effecting these transfers are also highly uncertain because these specific tax planning efforts are new.

While it is not currently feasible for the Treasury Department and the IRS to quantify these economic effects, part I.D.3 of these Special Analyses explains the rationale behind the provisions of these temporary regulations and provides a qualitative assessment of the alternatives considered.

The Treasury Department and the IRS solicit comments on this assessment of the economic effects of the temporary regulations.

3. Analysis of Specific Provisions

i. Ordering of Distributions of Earnings and Profits With Respect to Extraordinary Disposition Amounts

a. Background and Alternatives Considered

Any transaction that gave rise to an extraordinary disposition has already taken place because the disqualified period has closed for all taxpayers. Thus, the temporary regulations should have no economic effect with respect to these transactions. Nevertheless, the denial of a section 245A deduction with respect to the related extraordinary disposition E&P may in some cases lead CFCs to retain earnings rather than distribute them in order to defer the associated U.S. tax. The undistributed earnings in this case may lead to a so-called ''lockout effect'' pursuant to which some portion of the offshore capital remains in less productive ventures than would otherwise be the case had the earnings and profits been eligible for a section 245A deduction.

The temporary regulations address this potential concern by providing an ordering rule such that extraordinary distribution E&P generally are the last earnings and profits deemed distributed by a CFC. As a result, CFCs generally may distribute all other earnings and profits that are eligible for a section 245A deduction before extraordinary disposition E&P for which a section 245A deduction is not allowed. This rule will generally minimize the capital allocation inefficiencies stemming from a potential lockout effect by deferring the application of the temporary regulations to the latest extent possible. Moreover, the Treasury Department and the IRS expect that the extraordinary disposition E&P will not often be associated with liquid assets, such as cash. An extraordinary disposition requires a non-ordinary course transaction among related parties. The Treasury Department and the IRS are aware that transactions giving rise to an extraordinary disposition typically involve the issuance of related party debt or stock. These instruments are not the sort of assets that implicate lockout effect concerns because they would

[4] This claim refers solely to the economic benefit arising from this provision and does not refer to any estimate of the tax revenue effects of the provision.

rarely be used as consideration for making a payment to a third party.

The Treasury Department and the IRS considered as an alternative not providing an ordering rule. For the reasons mentioned above, this alternative was not adopted. In particular, the lack of an ordering rule would have inhibited taxpayers from accessing future offshore earnings that had been appropriately subject to tax under Act, which would have frustrated the congressional purpose underlying the participation exemption. By essentially reviving the lockout effect that had motivated certain international aspects of the Act, this alternative approach may have trapped capital in suboptimal offshore uses.

b. Affected Taxpayers

The taxpayers potentially affected by this aspect of the temporary regulations are direct or indirect U.S. shareholders of certain foreign corporations that are eligible for the section 245A deduction or the section 954(c)(6) exception with respect to distributions from the foreign corporation, and the foreign corporation uses a fiscal year, as opposed to the calendar year, as its taxable year. The foreign corporation must have engaged in a sale of property to a related party (1) during the period between January 1, 2018, and the end of the foreign corporation's last taxable year beginning before 2018, (2) outside the ordinary course of the foreign corporation's activities, and (3) generally, while the corporation was a CFC. Additionally, the property sold must give rise to tested income and the value of the property sold must exceed the lesser of $50 million or 5 percent of the total value of the property of the foreign corporation.

The Treasury Department and the IRS have not estimated how many taxpayers are likely to be affected by these regulations because data on the taxpayers that may have engaged in these particular transactions is not readily available. However, based on tabulations of the 2014 Statistics of Income Study file the Treasury Department and the IRS estimate that there are approximately 5,000 domestic corporations with at least one fiscal year CFC. The actual number of affected taxpayers is smaller than the number of domestic corporations with at least one fiscal year CFC, because a domestic corporation will not be affected unless its fiscal year CFC engages in a non-routine sale with a related party that is of sufficient magnitude that the temporary regulations to apply.

ii. Definition of Extraordinary Reduction

a. Background and Alternatives Considered

The temporary regulations limit the amount of the 245A deduction whenever there is an ''extraordinary reduction.'' The temporary regulations generally define an extraordinary reduction, subject to certain conditions, as when either the controlling section 245A shareholder transfers more than 10 percent of its stock of the CFC or there is a greater than 10 percent change in the controlling section 245A shareholder's overall ownership of the CFC.

The Treasury Department and the IRS, in defining an extraordinary reduction, considered other percentage thresholds. They expect that the ownership change threshold provides an effective balance of compliance costs for taxpayers, effective administration of section 245A, and revenue considerations. The Treasury Department and the IRS do not have appropriate data or models to precisely compute an optimal percentage threshold. The Treasury Department and the IRS solicit comments on the economic and revenue consequences of the ownership change threshold and alternative thresholds. The Treasury Department and the IRS particularly solicit comments that provide data, models, or analysis suitable for evaluating alternative thresholds.

b. Affected Taxpayers

The taxpayers potentially affected by this aspect of the temporary regulations are U.S. shareholders that own directly or indirectly stock of a CFC that has a controlling U.S. shareholder that owns 50 percent or more of the stock of the CFC. Additionally, during the taxable year, the controlling U.S. shareholder generally must directly or indirectly sell stock in the CFC that exceeds 10 percent of the controlling U.S. shareholder's interest in the CFC and 5 percent of the total value of the stock of the CFC. Furthermore, in the year of the ownership reduction, the subpart F income and tested income of the CFC must exceed the lesser of $50 million or 5 percent of the CFC's total income for the year.

The Treasury Department and the IRS have not estimated how many taxpayers are likely to be affected by these regulations because data on the taxpayers that may have engaged or would engage in these particular transactions is not readily available. However, based on 2014 Statistics of Income tax data, the Treasury Department and the IRS estimate that there are approximately 15,000 domestic corporations with CFCs. The Treasury Department and the IRS project that the actual number of affected taxpayers is likely much smaller than the number of domestic corporations with CFCs, given that the controlling U.S. shareholder must engage in a sale of stock of a CFC in a year in which the CFC pays a dividend in order for the temporary regulations to apply.

iii. Election To Avoid Taxable Dividend by Closing the CFC's Taxable Year

a. Background and Alternatives Considered

The Treasury Department and the IRS provide taxpayers with an election to avoid having a taxable dividend with respect to an extraordinary reduction amount by closing the taxable year of the CFC for all purposes of the Code on the date of the extraordinary reduction. Such an election would subject the earnings and profits that, absent the election, would give rise to an extraordinary reduction amount instead to taxation under the subpart F or GILTI regimes, and therefore, exemption under section 245A for any remaining earnings is appropriate. By providing this election, the Treasury Department and the IRS allow taxpayers to choose the tax treatment that would have been imposed in the absence of the interactions among provisions.

In addition to ensuring that similar income is taxed similarly, this election increases the choices available to taxpayers, thus increasing flexibility and thereby minimizing the burden imposed by these regulations. To the extent taxpayers choose this election, tax burdens could be reduced relative to tax burdens under the temporary regulations in the absence of the election, because denying the section 245A deduction could result in higher tax (*i.e.,* at ordinary corporate rates) than imposition of a reduced tax under the GILTI regime. The Treasury Department and the IRS chose to allow such election because if the election were not allowed, some taxpayers would be taxed more heavily than the Treasury Department and the IRS have determined is intended under the Act.

b. Affected Taxpayers

The taxpayers potentially affected by this aspect of the temporary regulations are described in Part I.D.3.ii.b of this Special Analyses.

II. Paperwork Reduction Act

The collections of information in the temporary regulations are in §§ 1.245A–5T(e)(3) and 1.6038–2T(f)(16).

The collection of information in § 1.245A–5T(e)(3) is elective for a domestic corporation that is a controlling U.S. shareholder of a CFC receiving a dividend from the CFC and wants to elect to have none of the dividend considered an extraordinary reduction amount by closing the CFC's tax year. The collection of information is satisfied by timely filing of the ''Elective Section 245A Year-Closing Statement'' with the domestic corporation's original Form 1120, U.S. Corporation Income Tax Return, for the taxable year in which the dividend is received. For purposes of the Paperwork Reduction Act, the reporting burden associated with § 1.245A–5T will be reflected in the Paperwork Reduction Act submission associated with Form 1120 (OMB control no. 1545–0123).

The collection of information in § 1.6038–2T(f)(16) is mandatory for every U.S. person that controls a foreign corporation that has paid a dividend for which a deduction under section 245A was limited by an ineligible amount under § 1.245A–5T(b) or paid a dividend for which the section 954(c)(6) exception was limited by a tiered extraordinary disposition amount or tiered extraordinary reduction amount under § 1.245A–5T(d) and (f), respectively, during an annual accounting period and files Form 5471 for that period (OMB control number 1545–0123 in the case of business taxpayers, formerly, OMB control number 1545–0704). The collection of information in § 1.6038–2T(f)(16) is satisfied by providing information about the ineligible amount, tiered extraordinary disposition amount, or tiered extraordinary reduction amount for the corporation's accounting period as Form 5471 and its instructions may prescribe. For purposes of the Paperwork Reduction Act, the reporting burden associated with § 1.6038–2T(f)(16) will be reflected in the applicable Paperwork Reduction Act submission, associated with Form 5471. As provided below, the estimated number of respondents for the reporting burden associated with § 1.6038–2T(f)(16) is 12,000–18,000, based on estimates provided by the Research, Applied Analytics and Statistics Division of the IRS.

The related new or revised tax form is as follows:

	New	Revision of existing form	Number of respondents (estimate)
Schedule to Form 5471		✓	12,000–18,000

The current status of the Paperwork Reduction Act submissions related to the new revised Form 5471 as a result of the information collections in the temporary regulations is provided in the accompanying table. The reporting burdens associated with the information collections in §§ 1.245A–5T–(e)(3) and 1.6038–2T(f)(16) are included in the aggregated burden estimates for OMB control number 1545–0123, which represents a total estimated burden time for all forms and schedules for corporations of 3.157 billion hours and total estimated monetized costs of $58.148 billion ($2017). The overall burden estimates provided in 1545–0123 are aggregate amounts that relate to the entire package of forms associated with the OMB control number and will in the future include but not isolate the estimated burden of the tax forms that will be revised as a result of the information collections in the proposed regulations. These numbers are therefore unrelated to the future calculations needed to assess the burden imposed by the temporary regulations. The Treasury Department and the IRS urge readers to recognize that these numbers are duplicates of estimates provided for informational purposes in other proposed and final regulatory actions and to guard against over-counting the burden that international tax provisions imposed prior to the Act.

In September 2018, the IRS released and invited comment on drafts of new revised Form 5471 in order to give members of the public the opportunity to benefit from certain specific provisions made to the Code. The IRS received no comments on the draft revised Form 5471 on the portions of the form that relate to section 245A during the comment period. Consequently, the IRS made the form available in December 2018 for use by the public. The IRS is contemplating making additional changes to Form 5471 to implement these temporary regulations.

No burden estimates specific to the temporary regulations are currently available. The Treasury Department and the IRS have not identified any burden estimates, including those for new information collections, related to the requirements under the temporary regulations. Those estimates would capture both changes made by the Act and those that arise out of discretionary authority exercised in the temporary regulations. The Treasury Department and the IRS request comments on all aspects of information collection burdens related to the temporary regulations, including estimates for how much time it would take to comply with the paperwork burdens described above for each relevant form and ways for the IRS to minimize the paperwork burden. Proposed revisions to these forms that reflect the information collections contained in these temporary regulations will be made available for public comment at *www.irs.gov/draftforms* and will not be finalized until after approved by OMB under the PRA.

Information collection	Type of filer	OMB No.(s)	Status
Form 5471	Business (NEW Model)	1545–0123	Approved by OMB on 12/21/2018.
	Link: https://www.federalregister.gov/documents/2018/12/21/2018-27735/agency-information-collection-activities-submission-for-omb-review-comment-request-multiple-irs.		

III. Unfunded Mandates Reform Act

Section 202 of the Unfunded Mandates Reform Act of 1995 requires that agencies assess anticipated costs and benefits and take certain other actions before issuing a final rule that includes any Federal mandate that may result in expenditures in any one year by a state, local, or tribal government, in

the aggregate, or by the private sector, of $100 million in 1995 dollars, updated annually for inflation. In 2019, that threshold is approximately $154 million. These temporary regulations do not include any Federal mandate that may result in expenditures by state, local, or tribal governments, or by the private sector in excess of that threshold.

IV. Executive Order 13132: Federalism

Executive Order 13132 (entitled ''Federalism'') prohibits an agency from publishing any rule that has federalism implications if the rule either imposes substantial, direct compliance costs on state and local governments, and is not required by statute, or preempts state law, unless the agency meets the consultation and funding requirements of section 6 of the Executive Order. These temporary regulations do not have federalism implications and do not impose substantial direct compliance costs on state and local governments or preempt state law within the meaning of the Executive Order.

Drafting Information

The principal author of the temporary regulations is Logan M. Kincheloe, Office of Associate Chief Counsel (International). However, other personnel from the Treasury Department and the IRS participated in their development.

List of Subjects in 26 CFR Part 1

Income taxes, Reporting and recordkeeping requirements.

Amendments to the Regulations

Accordingly, 26 CFR part 1 is amended as follows:

PART 1—INCOME TAXES

■ **Paragraph 1.** The authority citation for part 1 is amended by adding a sectional authority for § 1.245A–5 to read in part as follows:

Authority: 26 U.S.C. 7805 * * *

* * * * *

Section 1.245A–5 also issued under 26 U.S.C. 245A(g), 951A(a), 954(c)(6)(A), and 965(o).

* * * * *

■ **Par. 2.** Reserved sections 1.245A–1 through 4 and § 1.245A–5T are added to read as follows:

Sec.
1.245A–1 [Reserved].
1.245A–2 [Reserved].
1.245A–3 [Reserved].
1.245A–4 [Reserved].
1.245A–5T Limitation of section 245A deduction and section 954(c)(6) exception (temporary).

§ 1.245A–5T Limitation of section 245A deduction and section 954(c)(6) exception (temporary).

(a) *Overview.* This section provides rules that limit a deduction under section 245A(a) to the portion of a dividend that exceeds the ineligible amount of such dividend or the applicability of section 954(c)(6) when a portion of a dividend is paid out of an extraordinary disposition account or when an extraordinary reduction occurs. Paragraph (b) of this section provides rules regarding ineligible amounts. Paragraph (c) of this section provides rules for determining ineligible amounts attributable to an extraordinary disposition. Paragraph (d) of this section provides rules that limit the application of section 954(c)(6) when one or more section 245A shareholders of a lower-tier CFC have an extraordinary disposition account. Paragraph (e) of this section provides rules for determining ineligible amounts attributable to an extraordinary reduction. Paragraph (f) of this section provides rules that limit the application of section 954(c)(6) when a lower-tier CFC has an extraordinary reduction amount. Paragraph (g) of this section provides special rules for purposes of applying this section. Paragraph (h) of this section provides an anti-abuse rule. Paragraph (i) of this section provides definitions. Paragraph (j) of this section provides examples illustrating the application of this section. Paragraph (k) of this section provides the applicability date of this section. Paragraph (l) of this section provides the expiration date of this section.

(b) *Limitation of deduction under section 245A*—(1) *In general.* A section 245A shareholder is allowed a section 245A deduction for any dividend received from an SFC (provided all other applicable requirements are satisfied) only to the extent that the dividend exceeds the ineligible amount of the dividend. See paragraphs (j)(2), (4), and (5) of this section for examples illustrating the application of this paragraph (b)(1).

(2) *Definition of ineligible amount.* The term *ineligible amount* means, with respect to a dividend received by a section 245A shareholder from an SFC, an amount equal to the sum of—

(i) 50 percent of the extraordinary disposition amount (as determined under paragraph (c) of this section), and

(ii) The extraordinary reduction amount (as determined under paragraph (e) of this section).

(c) *Rules for determining extraordinary disposition amount*—(1) *Definition of extraordinary disposition amount.* The term *extraordinary disposition amount* means the portion of a dividend received by a section 245A shareholder from an SFC that is paid out of the extraordinary disposition account with respect to the section 245A shareholder. See paragraph (j)(2) of this section for an example illustrating the application of this paragraph (c).

(2) *Determination of portion of dividend paid out of extraordinary disposition account*—(i) *In general.* For purposes of determining the portion of a dividend received by a section 245A shareholder from an SFC that is paid out of the extraordinary disposition account with respect to the section 245A shareholder, the following rules apply—

(A) The dividend is first considered paid out of non-extraordinary disposition E&P with respect to the section 245A shareholder; and

(B) The dividend is next considered paid out of the extraordinary disposition account to the extent of the section 245A shareholder's extraordinary disposition account balance.

(ii) *Definition of non-extraordinary disposition E&P.* The term *non-extraordinary disposition E&P* means, with respect to a section 245A shareholder and an SFC, an amount of earnings and profits of the SFC equal to the excess, if any, of—

(A) The product of—

(*1*) The amount of the SFC's earnings and profits described in section 959(c)(3), determined as of the end of the SFC's taxable year (for this purpose, without regard to distributions during the taxable year other than as provided in this paragraph (c)(2)(ii)(A)(*1*)), but, if during the taxable year the SFC pays more than one dividend, reduced (but not below zero) by the amounts of any dividends paid by the SFC earlier in the taxable year; and

(*2*) The percentage of the stock (by value) of the SFC that the section 245A shareholder owns directly or indirectly immediately after the distribution (taking into account all transactions related to the distribution); over

(B) The balance of the section 245A shareholder's extraordinary disposition account with respect to the SFC, determined immediately before the distribution.

(3) *Definitions with respect to extraordinary disposition accounts*—(i) *Extraordinary disposition account*—(A) *In general.* The term *extraordinary disposition account* means, with respect to a section 245A shareholder of an SFC, an account the balance of which is equal to the product of the extraordinary disposition ownership percentage and the extraordinary disposition E&P, reduced (but not below zero) by the

prior extraordinary disposition amount, and adjusted under paragraph (c)(4) of this section, as applicable.

(B) *Extraordinary disposition ownership percentage.* The term *extraordinary disposition ownership percentage* means the percentage of stock (by value) of a SFC that a section 245A shareholder owns directly or indirectly at the beginning of the disqualified period or, if later, on the first day during the disqualified period on which the SFC is a CFC, regardless of whether the section 245A shareholder owns directly or indirectly such stock of the SFC on the date of an extraordinary disposition giving rise to extraordinary disposition E&P; if not, see paragraph (c)(4) of this section.

(C) *Extraordinary disposition E&P.* The term *extraordinary disposition E&P* means an amount of earnings and profits of an SFC equal the sum of the net gain recognized by the SFC with respect to specified property in each extraordinary disposition. In the case of an extraordinary disposition with respect to the SFC arising as a result of a disposition of specified property by a specified entity (other than a foreign corporation), an interest of which is owned directly or indirectly (through one or more other specified entities that are not foreign corporations) by the SFC, the net gain taken into account for purposes of the preceding sentence is the SFC's distributive share of the net gain recognized by the specified entity with respect to the specified property.

(D) *Prior extraordinary disposition amount*—(*1*) *General rule.* The term *prior extraordinary disposition amount* means, with respect to an SFC and a section 245A shareholder, the sum of the extraordinary disposition amount of each prior dividend received by the section 245A shareholder from the SFC by reason of paragraph (c) of this section and 200 percent of the sum of the amounts included in the section 245A shareholder's gross income under section 951(a) by reason of paragraph (d) of this section (in the case in which the SFC is, or has been, a lower-tier CFC). A section 245A shareholder's prior extraordinary disposition amount also includes—

(*i*) A prior dividend received by the section 245A shareholder from the SFC to the extent not an extraordinary reduction amount and to the extent the dividend was not eligible for the section 245A deduction by reason of section 245A(e) or the holding period requirement of section 246 not being satisfied but would have been an extraordinary disposition amount had paragraph (c) of this section applied to the dividend;

(*ii*) The portion of a prior dividend (to the extent not a tiered extraordinary disposition amount by reason of paragraph (d) of this section) received by an upper-tier CFC from the SFC that by reason of section 245A(e) was included in the upper-tier CFC's foreign personal holding company income and was included in gross income by the section 245A shareholder under section 951(a) but would have been a tiered extraordinary disposition amount by reason of paragraph (d) of this section had paragraph (d) applied to the dividend;

(*iii*) If a prior dividend received by an upper-tier CFC from a lower-tier CFC gives rise to a tiered extraordinary disposition amount with respect to the section 245A shareholder by reason of paragraph (d) of this section, the qualified portion.

(*2*) *Definition of qualified portion*—(*i*) *In general.* The term *qualified portion* means, with respect to a tiered extraordinary disposition amount of a section 245A shareholder and a lower-tier CFC, 200 percent of the portion of the disqualified amount with respect to the tiered extraordinary disposition amount equal to the sum of the amounts included in gross income by each U.S. tax resident under section 951(a) in the taxable year in which the tiered extraordinary disposition amount arose with respect to the lower-tier CFC by reason of paragraph (d) of this section. For purposes of the preceding sentence, the reference to a U.S. tax resident does not include any section 245A shareholder with a tiered extraordinary disposition amount with respect to the lower-tier CFC.

(*ii*) *Determining a qualified portion if multiple section 245A shareholders have tiered extraordinary disposition amounts.* For the purposes of applying paragraph (c)(3)(i)(D)(*2*)(*i*) of this section, if more than one section 245A shareholder has a tiered extraordinary disposition amount with respect to a dividend received by an upper-tier CFC from a lower-tier CFC, then the qualified portion with respect to each section 245A shareholder is equal to the amount described in paragraph (c)(3)(i)(D)(*2*)(*i*) of this section, without regard to this paragraph (c)(3)(i)(D)(*2*)(*ii*), multiplied by a fraction, the numerator of which is the section 245A shareholder's tiered extraordinary disposition amount with respect to the lower-tier CFC and the denominator of which is the sum of the tiered extraordinary disposition amounts with respect to each section 245A shareholder and the lower-tier CFC.

(ii) *Extraordinary disposition*—(A) *In general.* Except as provided in paragraph (c)(3)(ii)(E) of this section, the term *extraordinary disposition* means, with respect to an SFC, any disposition of specified property by the SFC on a date on which it was a CFC and during the SFC's disqualified period to a related party if the disposition occurs outside of the ordinary course of the SFC's activities. An extraordinary disposition also includes a disposition during the disqualified period on a date on which the SFC is not a CFC if there is a plan, agreement, or understanding involving a section 245A shareholder to cause the SFC to recognize gain that would give rise to an extraordinary disposition if the SFC were a CFC.

(B) *Facts and circumstances.* A determination as to whether a disposition is undertaken outside of the ordinary course of an SFC's activities is made on the basis of facts and circumstances, taking into account whether the transaction is consistent with the SFC's past activities, including with respect to quantity and frequency. In addition, a disposition of specified property by an SFC to a related party may be considered outside of the ordinary course of the SFC's activities notwithstanding that the SFC regularly disposes of property of the same type of, or similar to, the specified property to persons that are not related parties.

(C) *Per se rules.* A disposition is treated as occurring outside of the ordinary course of an SFC's activities if the disposition is undertaken with a principal purpose of generating earnings and profits during the disqualified period or if the disposition is of intangible property, as defined in section 367(d)(4).

(D) *Treatment of dispositions by certain specified entities.* For purposes of paragraph (c)(3)(ii)(A) of this section, an extraordinary disposition with respect to an SFC includes a disposition by a specified entity other than a foreign corporation, provided that immediately before or immediately after the disposition the specified entity is a related party with respect to the SFC, the SFC directly or indirectly (through one or more other specified entities other than foreign corporations) owns an interest in the specified entity, and the disposition would have otherwise qualified as an extraordinary disposition had the specified entity been a foreign corporation.

(E) *De minimis exception to extraordinary disposition.* If the sum of the net gain recognized by an SFC with respect to specified property in all dispositions otherwise described in paragraph (c)(3)(ii)(A) of this section does not exceed the lesser of $50 million or 5 percent of the gross value

of all of the SFC's property held immediately before the beginning of its disqualified period, then no disposition of specified property by the SFC is an extraordinary disposition.

(iii) *Disqualified period.* The term *disqualified period* means, with respect to an SFC that is a CFC on any day during the taxable year that includes January 1, 2018, the period beginning on January 1, 2018, and ending as of the close of the taxable year of the SFC, if any, that begins before January 1, 2018, and ends after December 31, 2017.

(iv) *Specified property.* The term *specified property* means any property if gain recognized with respect to such property during the disqualified period is not described in section 951A(c)(2)(A)(i)(I) through (V). If only a portion of the gain recognized with respect to property during the disqualified period is gain that is not described in section 951A(c)(2)(A)(i)(I) through (V), then a portion of the property is treated as specified property in an amount that bears the same ratio to the value of the property as the amount of gain not described in section 951A(c)(2)(A)(i)(I) through (V) bears to the total amount of gain recognized with respect to such property during the disqualified period.

(4) *Successor rules for extraordinary disposition accounts.* This paragraph (c)(4) applies with respect to an extraordinary disposition account upon certain direct or indirect transfers of stock of an SFC by a section 245A shareholder.

(i) *Another section 245A shareholder succeeds to all or portion of account.* Except for a transfer described in § 1.1248–8(a)(1), paragraphs (c)(4)(i)(A) through (C) of this section apply when a section 245A shareholder of an SFC (the *transferor*) transfers directly or indirectly a share of stock (or a portion of a share of stock) of the SFC that it owns directly or indirectly (the share or portion thereof, a *transferred share*).

(A) If immediately after the transfer (taking into account all transactions related to the transfer) another person is a section 245A shareholder of the SFC, then such other person's extraordinary disposition account with respect to the SFC is increased by the person's proportionate share of the amount allocated to the transferred share.

(B) For purposes of paragraph (c)(4)(i)(A) of this section, the amount allocated to a transferred share is equal to the product of—

(*1*) The balance of the transferor's extraordinary disposition account with respect to the SFC, determined after any reduction pursuant to paragraph (c)(3) of this section by reason of dividends and before the application of this paragraph (c)(4)(i)(B); and

(*2*) A fraction, the numerator of which is the value of the transferred share and the denominator of which is the value of all of the stock of the SFC that the transferor owns directly or indirectly immediately before the transfer.

(C) For purposes of paragraph (c)(4)(i)(A) of this section, a person's proportionate share of the amount allocated to a transferred share under paragraph (c)(4)(i)(B) of this section is equal to the product of—

(*1*) The amount allocated to the share; and

(*2*) The percentage (expressed as a decimal) of the share (by value) that the person owns directly or indirectly immediately after the transfer (taking into account all transactions related to the transfer).

(D) The transferor's extraordinary disposition account with respect to the SFC is decreased by the amount by which another person's extraordinary disposition account with respect to the SFC is increased pursuant to paragraph (c)(4)(i)(A) of this section.

(E) If a principal purpose of the transfer is to shift, or to avoid, an amount in the transferor's extraordinary disposition account with respect to the SFC to another person, then for purposes of this section, the transfer may be disregarded or other appropriate adjustments may be made.

(ii) *Certain section 381 transactions.* If assets of an SFC (the *acquired corporation*) are acquired by another SFC (the *acquiring corporation*) pursuant to a transaction described in section 381(a) in which the acquired corporation is the transferor corporation for purposes of section 381, then a section 245A shareholder's extraordinary disposition account with respect to the acquiring corporation is increased by the balance of its extraordinary disposition account with respect to the acquired corporation, determined after any reduction pursuant to paragraph (c)(3) of this section by reason of dividends and before the application of this paragraph (c)(4)(ii).

(iii) *Certain distributions involving section 355 or 356.* If, pursuant to a reorganization described in section 368(a)(1)(D) involving a distribution under section 355 (or so much of section 356 as it relates to section 355) by an SFC (the *distributing corporation*) of stock of another SFC (the *controlled corporation*), earnings and profits of the distributing corporation are allocated between the distributing corporation and the controlled corporation, then a section 245A shareholder's extraordinary disposition account with respect to the distributing corporation is allocated on a similar basis between the distributing corporation and the controlled corporation.

(iv) *Certain transfers of stock of lower-tier CFCs by upper-tier CFCs.* If an upper-tier CFC directly or indirectly transfers stock of a lower-tier CFC and if as a result of the transfer a section 245A shareholder ceases to be a section 245A shareholder with respect to the lower-tier CFC, then the section 245A shareholder's extraordinary disposition account with respect to the upper-tier CFC is increased by the balance of the section 245A shareholder's extraordinary disposition account with respect to the lower-tier CFC, determined after any reduction pursuant to paragraph (c)(3) of this section by reason of dividends and after application of paragraph (c)(4)(i) of this section, if applicable. If a section 245A shareholder ceases to be a section 245A shareholder with respect to a lower-tier CFC by reason of a direct or indirect transfer of stock of the lower-tier CFC by multiple upper-tier CFCs that occur pursuant to a plan (or series of related transactions), then the balance of the section 245A shareholder's extraordinary disposition account is allocated among the upper-tier CFCs. The portion of the balance of the account allocated to each upper-tier CFC is equal to the balance of the account multiplied by a fraction, the numerator of which is the value of the stock of the lower-tier CFC transferred directly or indirectly by the upper-tier CFC, and the denominator of which is the sum of the value of the stock of the lower-tier CFC transferred directly or indirectly by all upper-tier CFCs.

(d) *Limitation of amount eligible for section 954(c)(6) when there is an extraordinary disposition account with respect to a lower-tier CFC*—(1) *In general.* If an upper-tier CFC receives a dividend from a lower-tier CFC, the dividend is eligible for the exception to foreign personal holding company income under section 954(c)(6) only to the extent that the amount that would be eligible for the section 954(c)(6) exception (determined without regard to this paragraph (d)) exceeds the *disqualified amount,* which is 50 percent of the quotient of the following—

(i) The sum of each section 245A shareholder's tiered extraordinary disposition amount with respect to the lower-tier CFC; and

(ii) The percentage (expressed as a decimal) of stock of the upper-tier CFC (by value) owned, in the aggregate, by U.S. tax residents that include in gross income their pro rata share of the upper-

tier CFC's subpart F income under section 951(a) on the last day of the upper-tier CFC's taxable year. If a U.S. tax resident is a direct or indirect partner in a domestic partnership that is a United States shareholder of the upper-tier CFC, the amount of stock owned by the U.S. tax resident for purposes of the preceding sentence is determined under the principles of paragraph (g)(3) of this section.

(2) *Definition of tiered extraordinary disposition amount*—(i) *In general.* The term *tiered extraordinary disposition amount* means, with respect to a dividend received by an upper-tier CFC from a lower-tier CFC and a section 245A shareholder, the portion of the dividend that would be an extraordinary disposition amount if the section 245A shareholder received as a dividend its pro rata share of the dividend from the lower-tier CFC. The preceding sentence does not apply to an amount treated as a dividend received by an upper-tier CFC from a lower-tier CFC by reason of section 964(e)(4) (in such case, see paragraphs (b)(1) and (g)(2) of this section).

(ii) *Section 245A shareholder's pro rata share of a dividend received by an upper-tier CFC.* For the purposes of paragraph (d)(2)(i) of this section, a section 245A shareholder's pro rata share of the amount of a dividend received by an upper-tier CFC from a lower-tier CFC equals the amount by which the dividend would increase the section 245A shareholder's pro rata share of the upper-tier CFC's subpart F income under section 951(a)(2) and § 1.951–1(b) and (e) if the dividend were included in the upper-tier CFC's foreign personal holding company income under section 951(a)(1), determined without regard to section 952(c) and as if the upper-tier CFC had no deductions properly allocable to the dividend under section 954(b)(5).

(e) *Extraordinary reduction amount*—(1) *In general.* Except as provided in paragraph (e)(3) of this section, the term *extraordinary reduction amount* means, with respect to a dividend received by a controlling section 245A shareholder from a CFC during a taxable year of the CFC ending after December 31, 2017, in which an extraordinary reduction occurs with respect to the controlling section 245A shareholder's ownership of the CFC, the lesser of the amounts described in paragraph (e)(1)(i) or (ii) of this section. *See* paragraphs (j)(4) through (6) of this section for examples illustrating the application of this paragraph (e).

(i) The amount of the dividend.

(ii) The amount equal to the sum of the controlling section 245A shareholder's pre-reduction pro rata share of the CFC's subpart F income (as defined in section 952(a)) and tested income (as defined in section 951A(c)(2)(A)) for the taxable year, reduced, but not below zero, by the prior extraordinary reduction amount.

(2) *Rules regarding extraordinary reduction amounts*—(i) *Extraordinary reduction*—(A) *In general.* Except as provided in paragraph (e)(2)(i)(C) of this section, an *extraordinary reduction* occurs, with respect to a controlling section 245A shareholder's ownership of a CFC during a taxable year of the CFC, if either of the conditions described in paragraph (e)(2)(i)(A)(*1*) or (*2*) of this section is satisfied. See paragraphs (j)(4) and (5) of this section for examples illustrating an extraordinary reduction.

(*1*) The condition of this paragraph (e)(2)(i)(A)(*1*) requires that during the taxable year, the controlling section 245A shareholder transfers directly or indirectly (other than by reason of a transfer occurring pursuant to an exchange described in section 368(a)(1)(E) or (F)), in the aggregate, more than 10 percent (by value) of the stock of the CFC that the section 245A shareholder owns directly or indirectly as of the beginning of the taxable year of the CFC, provided the stock transferred, in the aggregate, represents at least 5 percent (by value) of the outstanding stock of the CFC as of the beginning of the taxable year of the CFC; or

(*2*) The condition of this paragraph (e)(2)(i)(A)(*2*) requires that, as a result of one or more transactions occurring during the taxable year, the percentage of stock (by value) of the CFC that the controlling section 245A shareholder owns directly or indirectly as of the close of the last day of the taxable year of the CFC is less than 90 percent of the percentage of stock (by value) that the controlling section 245A shareholder owns directly or indirectly on either of the dates described in paragraphs (e)(2)(i)(B)(*1*) and (*2*) of this section (such percentage, the *initial percentage*), provided the difference between the initial percentage and percentage at the end of the year is at least five percentage points.

(B) *Dates for purposes of the initial percentage.* For purposes of paragraph (e)(2)(i)(A)(*2*) of this section, the dates described in paragraphs (e)(2)(i)(B)(*1*) and (*2*) of this section are—

(*1*) The day of the taxable year on which the controlling section 245A shareholder owns directly or indirectly its highest percentage of stock (by value) of the CFC; and

(*2*) The day immediately before the first day on which stock was transferred directly or indirectly in the preceding taxable year in a transaction (or a series of transactions) occurring pursuant to a plan to reduce the percentage of stock (by value) of the CFC that the controlling section 245A shareholder owns directly or indirectly.

(C) *Transactions pursuant to which CFC's taxable year ends.* A controlling section 245A shareholder's direct or indirect transfer of stock of a CFC that but for this paragraph (e)(2)(i)(B) would give rise to an extraordinary reduction under paragraph (e)(2)(i)(A) of this section does not give rise to an extraordinary reduction if the taxable year of the CFC ends immediately after the transfer, provided that the controlling section 245A shareholder directly or indirectly owns the stock on the last day of such year. Thus, for example, if a controlling section 245A shareholder exchanges all the stock of a CFC pursuant to a complete liquidation of the CFC, the exchange does not give rise to an extraordinary reduction.

(ii) *Rules for determining pre-reduction pro rata share*—(A) *In general.* Except as provided in paragraph (e)(2)(ii)(B) of this section, the term *pre-reduction pro rata share* means, with respect to a controlling section 245A shareholder and the subpart F income or tested income of a CFC, the controlling section 245A shareholder's pro rata share of the CFC's subpart F income or tested income under section 951(a)(2) and § 1.951–1(b) and (e) or section 951A(e)(1) and § 1.951A–1(d)(1), respectively, determined based on the controlling section 245A shareholder's direct or indirect ownership of stock of the CFC immediately before the extraordinary reduction (or, if the extraordinary reduction occurs by reason of multiple transactions, immediately before the first transaction) and without regard to section 951(a)(2)(B) and § 1.951–1(b)(1)(ii), but only to the extent that such subpart F income or tested income is not included in the controlling section 245A shareholder's pro rata share of the CFC's subpart F income or tested income under section 951(a)(2) and § 1.951–1(b) and (e) or section 951A(e)(1) and § 1.951A–1(d)(1), respectively.

(B) *Decrease in section 245A shareholder's pre-reduction pro rata share for amounts taken into account by U.S. tax resident.* A controlling section 245A shareholder's pre-reduction pro rata share of subpart F income or tested income of a CFC for a taxable year is reduced by an amount equal to the sum of the amounts by which each U.S. tax

resident's pro rata share of the subpart F income or tested income is increased as a result of a transfer directly or indirectly of stock of the CFC by the controlling section 245A shareholder or an issuance of stock by the CFC (such an amount with respect to a U.S. tax resident, a *specified amount*), in either case, during the taxable year in which the extraordinary reduction occurs. For purposes of this paragraph (e)(2)(ii)(B), if there are extraordinary reductions with respect to more than one controlling section 245A shareholder during the CFC's taxable year, then a U.S. tax resident's specified amount attributable to an acquisition of stock from the CFC is prorated with respect to each controlling section 245A shareholder based on its relative decrease in ownership of the CFC. See paragraph (j)(5) of this section for an example illustrating a decrease in a section 245A shareholder's pre-reduction pro rata share for amounts taken into account by a U.S. tax resident.

(C) *Prior extraordinary reduction amount.* The term *prior extraordinary reduction amount* means, with respect to a CFC and section 245A shareholder and a taxable year of the CFC in which an extraordinary reduction occurs, the sum of the extraordinary reduction amount of each prior dividend received by the section 245A shareholder from the CFC during the taxable year. A section 245A shareholder's prior extraordinary reduction amount also includes—

(*1*) A prior dividend received by the section 245A shareholder from the CFC during the taxable year to the extent the dividend was not eligible for the section 245A deduction by reason of section 245A(e) or the holding period requirement of section 246 not being satisfied but would have been an extraordinary reduction amount had this paragraph (e) applied to the dividend;

(*2*) If the CFC is a lower-tier CFC for a portion of the taxable year during which the lower-tier CFC pays any dividend to an upper tier-CFC, the portion of a prior dividend received by an upper-tier CFC from the lower-tier CFC during the taxable year of the lower-tier CFC that, by reason of section 245A(e), was included in the upper-tier CFC's foreign personal holding company income and that by reason of section 951(a) was included in income of the section 245A shareholder, and that would have given rise to a tiered extraordinary reduction amount by reason of paragraph (f) of this section had paragraph (f) applied to the dividend of which the section 245A shareholder would have included a pro rata share of the tiered extraordinary reduction amount in income by reason of section 951(a); and

(*3*) If the CFC is a lower-tier CFC for a portion of the taxable year during which the lower-tier CFC pays any dividend to an upper-tier CFC, the sum of the portion of the tiered extraordinary reduction amount of each prior dividend received by an upper-tier CFC from the lower-tier CFC during the taxable year that is included in income of the section 245A shareholder by reason of section 951(a).

(3) *Exceptions*—(i) *Elective exception to close CFC's taxable year*—(A) *In general.* For a taxable year of a CFC in which an extraordinary reduction occurs with respect to a controlling section 245A shareholder and for which, absent this paragraph (e)(3), there would be an extraordinary reduction amount or tiered extraordinary reduction amount greater than zero, no amount is considered an extraordinary reduction amount or tiered extraordinary reduction amount with respect to the controlling section 245A shareholder if each controlling section 245A shareholder elects, pursuant to this paragraph (e)(3), to close the CFC's taxable year for all purposes of the Internal Revenue Code (and, therefore, as to all shareholders of the CFC) as of the end of the date on which the extraordinary reduction occurs, or, if the extraordinary reduction occurs by reason of multiple transactions, as of the end of each date on which a transaction forming a part of the extraordinary reduction occurs. For purposes of applying this paragraph (e)(3), a controlling section 245A shareholder that has an extraordinary reduction (or a transaction forming a part thereof) with respect to a CFC is treated as owning the same amount of stock it owned in the CFC immediately before the extraordinary reduction (or a transaction forming a part thereof) on the end of the date on which the extraordinary reduction occurs (or such transaction forming a part thereof occurs). To the extent that stock of a CFC is treated as owned by a controlling section 245A shareholder as of the close of the CFC's taxable year pursuant to the preceding sentence, such stock is treated as not being owned by any other person as of the close of the CFC's taxable year. If each controlling section 245A shareholder elects to close the CFC's taxable year, that closing will be treated as a change in accounting period for the purposes of § 1.964–1(c).

(B) *Allocation of foreign taxes.* If an election is made pursuant to this paragraph (e)(3) to close a CFC's taxable year and the CFC's taxable year under foreign law (if any) does not close at the end of the date on which the CFC's taxable year closes as a result of the election, foreign taxes paid or accrued with respect to such foreign taxable year are allocated between the period of the foreign taxable year that ends with, and the period of the foreign taxable year that begins after, the date on which the CFC's taxable year closes as a result of the election. If there is more than one date on which the CFC's taxable year closes as a result of the election, foreign taxes paid or accrued with respect to the foreign taxable year are allocated to all such periods. The allocation is made based on the respective portions of the taxable income of the CFC (as determined under foreign law) for the foreign taxable year that are attributable under the principles of § 1.1502–76(b) to the periods during the foreign taxable year. Foreign taxes allocated to a period under this paragraph (e)(3)(i)(B) are treated as paid or accrued by the CFC as of the close of that period.

(C) *Time and manner of making election*—(*1*) *General rule.* An election pursuant to this paragraph (e)(3) is made and effective if the statement required by paragraph (e)(3)(iv) of this section is timely filed (including extensions) by each controlling section 245A shareholder making the election with its original U.S. tax return for the taxable year in which the extraordinary reduction occurs. Before the filing of the statement described in paragraph (e)(3)(iv) of this section, each controlling section 245A shareholder and each U.S. tax resident that on the end of the date on which the extraordinary reduction occurs (or, if the extraordinary reduction occurs by reason of multiple transactions, each U.S. tax resident that on the end of each date on which a transaction forming a part of the extraordinary reduction occurs) owns directly or indirectly stock of the CFC and is a United States shareholder with respect to the CFC must enter into a written, binding agreement agreeing that each controlling section 245A shareholder will elect to close the taxable year of the CFC. If a controlling section 245A shareholder is a member of a consolidated group (within the meaning of § 1.1502–1(h)) and participates in the extraordinary reduction, the agent for such group (within the meaning of § 1.1502–77(c)(1)) must file the election described in this paragraph (e)(3) on behalf of such member.

(*2*) *Transition rule.* In the case of an extraordinary reduction occurring before the date these regulations are filed as final regulations in the **Federal**

Register, the statement required by paragraph (e)(3)(iv) of this section is considered timely filed if it is attached by each controlling section 245A shareholder to an original or amended return for the taxable year in which the extraordinary reduction occurs.

(D) *Form and content of statement.* The statement required by paragraph (e)(3)(iii) of this section is to be titled ''Elective Section 245A Year-Closing Statement.'' The statement must—

(*1*) Identify (by name and tax identification number, if any) each controlling section 245A shareholder, each U.S tax resident described in paragraph (e)(3)(iii) of this section, and the CFC;

(*2*) State the date of the extraordinary reduction (or, if the extraordinary reduction includes transactions on more than one date, the dates of all such transactions) to which the election applies;

(*3*) State the filing controlling section 245A shareholder's pro rata share of the subpart F income, tested income, and foreign taxes described in section 960 with respect to the stock of the CFC subject to the extraordinary reduction, and the amount of earnings and profits attributable to such stock within the meaning of section 1248, as of the date of the extraordinary reduction;

(*4*) State that each controlling section 245A shareholder and each U.S. tax resident described in paragraph (e)(3)(iii) of this section have entered into a written, binding agreement to elect to close the CFC's taxable year in accordance with paragraph (e)(3)(iii) of this section; and

(*5*) Be filed in the manner prescribed by forms, publications, or other guidance published in the Internal Revenue Bulletin.

(E) *Consistency requirements.* If multiple extraordinary reductions occur with respect to one or more controlling section 245A shareholders' ownership in a single CFC during one or more taxable years of the CFC, then to the extent those extraordinary reductions occur pursuant to a plan or series of related transactions, the election described in this paragraph (e)(3) section may be made only if it is made for all such extraordinary reductions with respect to the CFC. Furthermore, if an extraordinary reduction occurs with respect to a controlling section 245A shareholder's ownership in multiple CFCs, then, to the extent those extraordinary reductions occur pursuant to a plan or series of related transactions, the election described in this paragraph (e)(3) may be made only if it is made for all such extraordinary reductions with respect to all of the CFCs that have the same or related (within the meaning of section 267(b) or 707(b)) controlling section 245A shareholders.

(ii) *De minimis subpart F income and tested income.* For a taxable year of a CFC in which an extraordinary reduction occurs, no amount is considered an extraordinary reduction amount with respect to a controlling section 245A shareholder of the CFC if the sum of the CFC's subpart F income and tested income (as defined in section 951A(c)(2)(A)) for the taxable year does not exceed the lesser of $50 million or 5 percent of the CFC's total income for the taxable year.

(f) *Limitation of amount eligible for section 954(c)(6) where extraordinary reduction occurs with respect to lower-tier CFCs*—(1) *In general.* If an extraordinary reduction occurs with respect to a lower-tier CFC and an upper-tier CFC receives a dividend from the lower-tier CFC in the taxable year in which the extraordinary reduction occurs, then the amount of the dividend that would otherwise be eligible for the exception to foreign personal holding company income under section 954(c)(6) (determined without regard to this paragraph (f)) is eligible for such exception only to the extent the dividend exceeds the tiered extraordinary reduction amount. The preceding sentence does not apply to an amount treated as a dividend received by an upper-tier CFC by reason of section 964(e)(4) (in this case, see paragraphs (b) and (g)(2) of this section). See paragraph (j)(7) of this section for an example illustrating the application of this paragraph (f)(1).

(2) *Definition of tiered extraordinary reduction amount.* The term *tiered extraordinary reduction amount* means, with respect to the portion of a dividend received by an upper-tier CFC from a lower-tier CFC during a taxable year of the lower-tier CFC that would be eligible for the exception to foreign personal holding company income under section 954(c)(6) (determined without regard to this paragraph (f)), the amount of such dividend equal to the excess, if any, of—

(i) The product of—

(A) The sum of the amount of the subpart F income and tested income of the lower-tier CFC for the taxable year; and

(B) The percentage (by value) of stock of the lower-tier CFC owned (within the meaning of section 958(a)(2)) by the upper-tier CFC immediately before the extraordinary reduction (or the first transaction forming a part thereof); over

(ii) The following amounts—

(A) The sum of each U.S. tax resident's pro rata share of the lower-tier CFC's subpart F income and tested income under section 951(a) or 951A(a), respectively, that is attributable to shares of the lower-tier CFC owned (within the meaning of section 958(a)(2)) by the upper-tier CFC immediately prior to the extraordinary reduction (or the first transaction forming a part thereof), computed without the application of this paragraph (f);

(B) The sum of each prior tiered extraordinary reduction amount and sum of each amount included in an upper-tier CFC's subpart F income by reason of section 245A(e) with respect to prior dividends from the lower-tier CFC during the taxable year;

(C) The sum of the prior extraordinary reduction amounts (but, for this purpose, computed without regard to amounts described in paragraphs (e)(2)(ii)(C)(*2*) and (*3*) of this section) of each controlling section 245A shareholder with respect to shares of the lower-tier CFC that were owned by such controlling section 245A shareholder (including indirectly through a specified entity other than a foreign corporation) for a portion of the taxable year but are owned by an upper-tier CFC (including indirectly through a specified entity other than a foreign corporation) at the time of the distribution of the dividend; and

(D) The product of the amount described in paragraph (f)(2)(i)(B) of this section and the sum of the amounts of each U.S. tax resident's pro rata share of subpart F income and tested income for the taxable year under section 951(a) or 951A(a), respectively, attributable to shares of the lower-tier CFC directly or indirectly acquired by the U.S. tax resident from the lower-tier CFC during the taxable year.

(3) *Transition rule for computing tiered extraordinary reduction amount.* Solely for purposes of applying this paragraph (f) in taxable years of a lower-tier CFC beginning on or after January 1, 2018, and ending before June 14, 2019, a tiered extraordinary reduction amount is determined by treating the lower-tier CFC's subpart F income for the taxable year as if it were neither subpart F income nor tested income.

(g) *Special rules.* The following rules apply for purposes of this section.

(1) *Source of dividends.* A dividend received by any person is considered received directly by such person from the foreign corporation whose earnings and profits give rise to the dividend. Therefore, for example, if a section 245A shareholder sells or exchanges stock of an upper-tier CFC and the gain

recognized on the sale or exchange is included in the gross income of the section 245A shareholder as a dividend under section 1248(a), then, to the extent the dividend is attributable under section 1248(c)(2) to the earnings and profits of a lower-tier CFC owned, within the meaning of section 958(a)(2), by the section 245A shareholder through the upper-tier CFC, the dividend is considered received directly by the section 245A shareholder from the lower-tier CFC.

(2) *Certain section 964(e) inclusions treated as dividends.* An amount included in the gross income of a section 245A shareholder under section 951(a)(1)(A) by reason of section 964(e)(4) is considered a dividend received by the section 245A shareholder directly from the foreign corporation whose earnings and profits give rise to the amount described in section 964(e)(1). Therefore, for example, if an upper-tier CFC sells or exchanges stock of a lower-tier CFC, and, as a result of the sale or exchange, a section 245A shareholder with respect to the upper-tier CFC includes an amount in gross income under section 951(a)(1)(A) by reason of section 964(e)(4), then the inclusion is treated as a dividend received directly by the section 245A shareholder from the lower-tier CFC whose earnings and profits give rise to the dividend, and the section 245A shareholder is not allowed a section 245A deduction for the dividend to the extent of the ineligible amount of such dividend.

(3) *Rules regarding stock ownership and stock transfers*—(i) *Determining indirect ownership of stock of an SFC or a CFC.* For purposes of this section, if a person owns an interest in, or stock of, a specified entity, including through a chain of ownership of one or more other specified entities, then the person is considered to own indirectly a pro rata share of stock of an SFC or a CFC owned by the specified entity. To determine a person's pro rata share of stock owned by a specified entity, the principles of section 958(a) apply without regard to whether the specified entity is foreign or domestic.

(ii) *Determining indirect transfers for stock owned indirectly.* If, under paragraph (g)(3)(i) of this section, a person is considered to own indirectly stock of an SFC or CFC that is owned by a specified entity, then the following rules apply in determining if the person transfers stock of the SFC or CFC—

(A) To the extent the specified entity transfers stock that is considered owned indirectly by the person immediately before the transfer, the person is considered to transfer indirectly such stock;

(B) If the person transfers an interest in, or stock of, the specified entity, then the person is considered to transfer indirectly the stock of the SFC or CFC attributable to the interest in, or the stock of, the specified entity that is transferred; and

(C) In the case in which the person owns the specified entity through a chain of ownership of one or more other specified entities, if there is a transfer of an interest in, or stock of, another specified entity in the chain of ownership, then the person is considered to transfer indirectly the stock of the SFC or CFC attributable to the interest in, or the stock of, the other specified entity transferred.

(iii) *Definition of specified entity.* The term *specified entity* means any partnership, trust, or estate (in each case, domestic or foreign), or any foreign corporation.

(4) *Coordination rules*—(i) *General rule.* A dividend is first subject to section 245A(e). To the extent the dividend is not a hybrid dividend or tiered hybrid dividend under section 245A(e), the dividend is subject to paragraph (e) or (f) of this section, as applicable, and then, to the extent the dividend is not subject to paragraph (e) or (f) of this section, it is subject to paragraph (c) or (d) of this section, as applicable.

(ii) *Coordination rule for paragraphs (c) and (d) and (e) and (f) of this section, respectively.* If an SFC or CFC pays a dividend (or simultaneous dividends), a portion of which may be subject to paragraph (c) or (e) of this section and a portion of which may be subject to paragraph (d) or (f) of this section, the rules of this section apply by treating the portion of the dividend or dividends that may be subject to paragraph (c) or (e) of this section as if it occurred immediately before the portion of the dividend or dividends that may be subject to paragraph (d) or (f) of this section. For example, if a dividend arising under section 964(e)(4) occurs at the same time as a dividend that would be eligible for the exception to foreign personal holding company income under section 954(c)(6) but for the potential application of paragraph (d) this section, then the tiered extraordinary disposition amount with respect to the other dividend is determined as if the dividend arising under section 964(e)(4) occurs immediately prior to the other dividend.

(5) *Ordering rule for multiple dividends made by an SFC or a CFC during a taxable year.* If an SFC or a CFC pays dividends on more than one date during its taxable year or at different times on the same date, this section applies based on the order in which the dividends are paid.

(6) *Partner's distributive share of a domestic partnership's pro rata share of subpart F income.* If a section 245A shareholder or a U.S. tax resident is a direct or indirect partner in a domestic partnership that is a United States shareholder with respect to a CFC and includes in gross income its pro rata share of the CFC's subpart F income under section 951(a), then, solely for purposes of this section, a reference to the section 245A shareholder's or U.S. tax resident's pro rata share of the CFC's subpart F income included in gross income under section 951(a) includes such person's distributive share of the domestic partnership's pro rata share of the CFC's subpart F income. A person is an indirect partner with respect to a domestic partnership if the person indirectly owns the domestic partnership through one or more specified entities (other than a foreign corporation).

(h) *Anti-abuse rule.* The Commissioner may make appropriate adjustments to any amounts determined under this section if a transaction is engaged in with a principal purpose of avoiding the purposes of this section.

(i) *Definitions.* The following definitions apply for purposes of this section.

(1) *Controlled foreign corporation.* The term *controlled foreign corporation* (or *CFC*) has the meaning provided in section 957.

(2) *Controlling section 245A shareholder.* The term *controlling section 245A shareholder* means, with respect to a CFC, any section 245A shareholder that owns directly or indirectly more than 50 percent (by vote or value) of the stock of the CFC. For purposes of determining whether a section 245A shareholder is a controlling section 245A shareholder with respect to a CFC, all stock of the CFC owned by a related party with respect to the section 245A shareholder or by other persons acting in concert with the section 245A shareholder to undertake an extraordinary reduction is considered owned by the section 245A shareholder. If section 964(e)(4) applies to a sale or exchange of a lower-tier CFC with respect to a controlling section 245A shareholder, all United States shareholders of the CFC are considered to act in concert with regard to the sale or exchange. In addition, if all persons selling stock in a CFC, held directly, sell such stock to the same buyer or buyers (or a related party with respect to the buyer or buyers) as part of the same

plan, all sellers will be considered to act in concert with regard to the sale or exchange.

(3) *Disqualified amount.* The term *disqualified amount* has the meaning set forth in paragraph (d)(1) of this section.

(4) *Disqualified period.* The term *disqualified period* has the meaning set forth in paragraph (c)(3)(iii) of this section.

(5) *Extraordinary disposition.* The term *extraordinary disposition* has the meaning set forth in paragraph (c)(3)(ii) of this section.

(6) *Extraordinary disposition account.* The term *extraordinary disposition amount* has the meaning set forth in paragraph (c)(3)(i) of this section.

(7) *Extraordinary disposition amount.* The term *extraordinary disposition amount* has the meaning set forth in paragraph (c)(1) of this section.

(8) *Extraordinary disposition E&P.* The term *extraordinary E&P* has the meaning set forth in paragraph (c)(3)(i)(C) of this section.

(9) *Extraordinary disposition ownership percentage.* The term extraordinary disposition ownership percentage has the meaning set forth in paragraph (c)(3)(i)(B) of this section.

(10) *Extraordinary reduction.* The term *extraordinary reduction* has the meaning set forth in paragraph (e)(2)(i)(A) of this section.

(11) *Extraordinary reduction amount.* The term *extraordinary reduction amount* has the meaning set forth in paragraph (e)(1) of this section.

(12) *Ineligible amount.* The term *ineligible amount* has the meaning set forth in paragraph (b)(2) of this section.

(13) *Lower-tier CFC.* The term *lower-tier CFC* means a CFC whose stock is owned (within the meaning of section 958(a)(2)), in whole or in part, by another CFC.

(14) *Non-extraordinary disposition E&P.* The term *non-extraordinary disposition E&P* has the meaning set forth in paragraph (c)(2)(ii) of this section.

(15) *Pre-reduction pro rata share.* The term *pre-reduction pro rata share* has the meaning set forth in paragraph (e)(2)(ii) of this section.

(16) *Prior extraordinary disposition amount.* The term *prior extraordinary disposition amount* has the meaning set forth in paragraph (c)(3)(i)(D) of this section.

(17) *Prior extraordinary reduction amount.* The term *prior extraordinary reduction amount* has the meaning set forth in paragraph (e)(2)(ii)(C) of this section.

(18) *Qualified portion.* The term *qualified portion* has the meaning set forth in paragraph (c)(3)(i)(D)(*2*)(*i*) of this section.

(19) *Related party.* The term *related party* means, with respect to a person, another person bearing a relationship described in section 267(b) or 707(b) to the person, in which case such persons are *related.*

(20) *Section 245A deduction.* The term *section 245A deduction* means, with respect to a dividend received by a section 245A shareholder from an SFC, the amount of the deduction allowed to the section 245A shareholder by reason of the dividend.

(21) *Section 245A shareholder.* The term *section 245A shareholder* means a domestic corporation that is a United States shareholder with respect to an SFC that owns directly or indirectly stock of the SFC.

(22) *Specified 10-percent owned foreign corporation (SFC).* The term *specified 10-percent owned foreign corporation* (or *SFC*) has the meaning provided in section 245A(b)(1).

(23) *Specified entity.* The term *specified entity* has the meaning set forth in paragraph (g)(3)(iii) of this section.

(24) *Specified property.* The term *specified property* has the meaning set forth in paragraph (c)(3)(iv) of this section.

(25) *Tiered extraordinary disposition amount.* The term *tiered extraordinary disposition amount* has the meaning set forth in paragraph (d)(2)(i) of this section.

(26) *Tiered extraordinary reduction amount.* The term *tiered extraordinary reduction amount* has the meaning set forth in paragraph (f)(2) of this section.

(27) *United States shareholder.* The term *United States shareholder* has the meaning provided in section 951(b).

(28) *Upper-tier CFC.* The term *upper-tier CFC* means a CFC that owns (within the meaning of section 958(a)(2)) stock in another CFC.

(29) *U.S. tax resident.* The term *U.S. tax resident* means a United States person described in section 7701(a)(30)(A) or (C).

(j) *Examples.* The application of this section is illustrated by the examples in this paragraph (j).

(1) *Facts.* Except as otherwise stated, the following facts are assumed for purposes of the examples:

(i) US1 and US2 are domestic corporations, each with a calendar taxable year, and are not related parties with respect to each other.

(ii) CFC1 and CFC2 are foreign corporations that are SFCs and CFCs.

(iii) Each entity uses the U.S. dollar as its functional currency.

(iv) Year 2 begins on or after January 1, 2018, and has 365 days.

(v) Absent application of this section, the dividends received by US1 and US2 from CFC1 meet the requirements to qualify for the section 245A deduction.

(vi) The de minimis rules in paragraphs (c)(3)(ii)(E) and (e)(3)(ii) of this section do not apply.

(2) *Example 1. Extraordinary disposition*—(i) *Facts.* US1 and US2 own 60% and 40%, respectively, of the single class of stock of CFC1. CFC1 owns all of the single class of stock of CFC2. CFC1 and CFC2 use the taxable year ending November 30 as their taxable year. On November 1, 2018, CFC1 sells specified property to CFC2 in exchange for $200x of cash (the ''Property Transfer''). The Property Transfer is outside of CFC1's ordinary course of activities. The transferred property has a basis of $100x in the hands of CFC1. CFC1 recognizes $100x of gain as a result of the Property Transfer ($200x − $100x). On December 1, 2018, CFC1 distributes $80x pro rata to US1 ($48x) and US2 ($32x), all of which is a dividend within the meaning of section 316 and treated as a distribution out of earnings described in section 959(c)(3). No other distributions are made by CFC1 to either US1 or US2 in CFC1's taxable year ending November 30, 2019. For its taxable year ending on November 30, 2019, CFC1 has $110x of earnings and profits described in section 959(c)(3), without regard to any distributions during the taxable year.

(ii) *Analysis*—(A) *Identification of extraordinary disposition.* Because CFC1 is a CFC and uses the taxable year ending on November 30, under paragraph (c)(3)(iii) of this section, it has a disqualified period beginning on January 1, 2018, and ending on November 30, 2018. In addition, under paragraph (c)(3)(ii) of this section, the Property Transfer is an extraordinary disposition because it (i) is a disposition of specified property by CFC1 on a date on which it was a CFC and during CFC1's disqualified period, (ii) is to CFC2, a related party with respect to CFC1, (iii) occurs outside of the ordinary course of CFC1's activities, and (iv) is not subject to the de minimis rule in paragraph (c)(3)(ii)(E) of this section.

(B) *Determination of section 245A shareholders and their extraordinary disposition accounts.* Because CFC1 undertook an extraordinary disposition, under paragraph (c)(3)(i) of this section, a portion of CFC1's earnings and profits are extraordinary disposition E&P and, therefore, give rise to an extraordinary disposition account with respect to each of CFC1's section 245A shareholders. Under paragraph (i)(21) of this section, US1 and US2 are both section 245A shareholders with respect to CFC1. The amount of the extraordinary disposition account with respect to US1 is $60x, which is equal to the product of the extraordinary disposition E&P (the amount of the net gain recognized by CFC1 as a result of the Property Transfer ($100x)) and the extraordinary disposition ownership percentage (the percentage of the stock of CFC1 owned directly or indirectly by US1 on January 1, 2018 (60%)), reduced by the prior extraordinary disposition amount ($0). *See* paragraph (c)(3)(i) of this section. Similarly, the amount of the extraordinary disposition

account with respect to US2 is $40x, which is equal to the product of the extraordinary disposition E&P (the net gain recognized by CFC1 as a result of the Property Transfer ($100x)) and extraordinary disposition ownership percentage (the percentage of the stock of CFC1 owned directly or indirectly by US2 on January 1, 2018 (40%)), reduced by the prior extraordinary disposition amount ($0).

(C) *Determination of extraordinary disposition amount with respect to US1.* The dividend of $48x paid to US1 on December 1, 2018, is an extraordinary disposition amount to the extent the dividend is paid out of the extraordinary disposition account with respect to US1. *See* paragraph (c)(1) of this section. Under paragraph (c)(2)(i) of this section, the dividend is first considered paid out of non-extraordinary disposition E&P with respect to US1, to the extent thereof. With respect to US1, $6x of CFC1's earnings and profits is non-extraordinary disposition E&P, calculated as the excess of $66x (the product of $110x of earnings and profits described in section 959(c)(3), without regard to the $80x distribution, and 60%) over $60x (the balance of US1's extraordinary disposition account with respect to CFC1, immediately before the distribution). *See* paragraph (c)(2)(ii) of this section. Thus, $6x of the dividend is considered paid out of non-extraordinary disposition E&P with respect to US1. Under paragraph (c)(2)(i)(B) of this section, the remaining $42x of the dividend is next considered paid out of US1's extraordinary disposition account with respect to CFC1, to the extent thereof. Accordingly, $42x of the dividend is considered paid out of the extraordinary disposition account with respect to CFC1 and gives rise to $42x of an extraordinary disposition amount. As a result, US1's prior extraordinary disposition amount is increased by $42x under paragraph (c)(3)(i)(D) of this section, and US1's extraordinary disposition account is reduced to $18x ($60 − $42x) under paragraph (c)(3)(i)(A) of this section.

(D) *Determination of extraordinary disposition amount with respect to US2.* The dividend of $32x paid to US2, on December 1, 2018, is an extraordinary disposition amount to the extent the dividend is paid out of extraordinary disposition E&P with respect to US2. *See* paragraph (c)(1) of this section. Under paragraph (c)(2)(i) of this section, the dividend is first considered paid out of non-extraordinary disposition E&P with respect to US2, to the extent thereof. With respect to US2, $4x of CFC1's earnings and profits is non-extraordinary disposition E&P, calculated as the excess of $44x (the product of $110x of earnings and profits described in section 959(c)(3), without regard to the $80x distribution, and 40%) over $40x (the balance of US2's extraordinary disposition account with respect to CFC1, immediately before the distribution). *See* paragraph (c)(2)(ii) of this section. Thus, $4x of the dividend is considered paid out of non-extraordinary disposition E&P with respect to US2. Under paragraph (c)(2)(i)(B) of this section, the remaining $28x of the dividend is next considered paid out of US2's extraordinary disposition account with respect to CFC1, to the extent thereof. Accordingly, $28x of the dividend is considered paid out of the extraordinary disposition account with respect to US2 and gives rise to $28x of an extraordinary disposition amount. As a result, US2's prior extraordinary disposition amount is increased by $28x under paragraph (c)(3)(i)(D) of this section, and US2's extraordinary disposition account is reduced to $12x ($40 − $28x) under paragraph (c)(3)(i)(A) of this section.

(E) *Determination of ineligible amount with respect to US1 and US2.* Under paragraph (b)(2) of this section, with respect to US1 and the dividend of $48x, the ineligible amount is $21x, the sum of 50 percent of the extraordinary disposition amount ($42x) and extraordinary reduction amount ($0). Therefore, with respect to the dividend received by US1 of $48x, $27x is eligible for a section 245A deduction. With respect to US2 and the dividend of $32x, the ineligible amount is $14x, the sum of 50% of the extraordinary disposition amount ($28x) and extraordinary reduction amount ($0). Therefore, with respect to the dividend received by US2 of $32x, $18x is eligible for a section 245A deduction.

(3) *Example 2. Application of section 954(c)(6) exception with extraordinary disposition account*—(i) *Facts.* The facts are the same as in paragraph (j)(2)(i) of this section (the facts in *Example 1*) except that the Property Transfer is a sale by CFC2 to CFC1 instead of a sale by CFC1 to CFC2, the $80x distribution is by CFC2 to CFC1 in a separate transaction that is unrelated to the Property Transfer, and the description of the earnings and profits of CFC1 is applied to CFC2. Additionally, absent the application of this section, section 954(c)(6) would apply to the distribution by CFC2 to CFC1. Under section 951(a)(2) and § 1.951–1(b) and (e), US1's pro rata share of any subpart F income of CFC1 is 60% and US2's pro rata share of any subpart F income of CFC2 is 40%.

(ii) *Analysis*—(A) *Identification of extraordinary disposition.* The Property Transfer is an extraordinary disposition under the same analysis as provided in paragraph (j)(2)(ii)(A) of this section (the analysis in *Example 1*).

(B) *Determination of section 245A shareholders and their extraordinary disposition accounts.* Both US1 and US2 are section 245A shareholders with respect to CFC2, US1 has an extraordinary disposition account of $60x with respect to CFC2, and US2 has an extraordinary disposition account of $40x with respect to CFC2 under the same analysis as provided in paragraph (j)(2)(ii)(B) of this section (the analysis in *Example 1*).

(C) *Determination of tiered extraordinary disposition amount*—(*1*) *In general.* US1 and US2 each have a tiered extraordinary disposition amount with respect to the $80x dividend paid by CFC2 to CFC1 to the extent that US1 and US2 would have an extraordinary disposition amount if each had received as a dividend its pro rata share of the dividend from CFC2. *See* paragraph (d)(2)(i) of this section. Under paragraph (d)(2)(ii) of this section, US1's pro rata share of the dividend is $48x (60% − $80x), that is, the increase to US1's pro rata share of the subpart F income if the dividend were included in CFC1's foreign personal holding company income, without regard to section 952(c) and the allocation of expenses. Similarly, US2's pro rata share of the dividend is $32x (40% − $80x).

(*2*) *Determination of tiered extraordinary disposition amount with respect to US1.* The extraordinary disposition amount with respect to US1 is $42x, under the same analysis provided in paragraph (j)(2)(ii)(C) of this section (the analysis in *Example 1*). Accordingly, the tiered extraordinary disposition amount with respect to US1 is $42x.

(*3*) *Determination of extraordinary disposition amount with respect to US2.* The extraordinary disposition amount with respect to US2 is $28x, under the same analysis provided in paragraph (j)(2)(ii)(D) of this section (the analysis in *Example 1*). Accordingly, the tiered extraordinary disposition amount with respect to US2 is $28x.

(D) *Limitation of section 954(c)(6) exception.* The sum of US1 and US2's tiered extraordinary disposition amounts is $70x ($42x + $28x). The portion of the stock of CFC1 (by value) owned (within the meaning of section 958(a)) by U.S. tax residents on the last day of CFC1's taxable year is 100%. Under paragraph (d)(1) of this section, the disqualified amount with respect to the dividend is $35x (50% × ($70x/100%)). Accordingly, the portion of the $80x dividend from CFC2 to CFC1 that is eligible for the exception to foreign personal holding company income under section 954(c)(6) is $45x ($80x − $35x). Under section 951(a)(2) and § 1.951–1(b) and (e), US1 includes $21x (60% × $35x) and US2 includes $14x (60% × $35x) in income under section 951(a).

(E) *Changes in extraordinary disposition account of US1.* Under paragraph (c)(3)(i)(D)(*1*) of this section, US1's prior extraordinary disposition amount with respect to CFC2 is increased by $42x, or 200% of $21x, the amount US1 included in income under section 951(a) with respect to CFC1. Under paragraph (c)(3)(i)(D)(*1*)(*iii*) of this section, US1 has no qualified portion because all of the owners of CFC2 are section 245A shareholders with a tiered extraordinary disposition amount with respect to CFC2. As a result, US1's extraordinary disposition account is reduced to $18x ($60x − $42x) under paragraph (c)(3)(i)(A) of this section.

(F) *Changes in extraordinary disposition account of US2.* Under paragraph (c)(3)(i)(D)(*1*) of this section, US2's prior extraordinary disposition amount with respect to CFC2 is increased by $28x, or 200% of $14x, the amount US2 included in income under section 951(a) with respect to CFC1. Under paragraph (c)(3)(i)(D)(*1*)(*iii*) of this section, US2 has no qualified portion because all of the owners of CFC2 are section 245A shareholders with a tiered extraordinary disposition amount with respect to CFC2. As a result, US2's extraordinary disposition account is reduced to $12x ($40x − $28x) under paragraph (c)(3)(i)(A) of this section.

(4) *Example 3. Extraordinary reduction*—(i) *Facts.* At the beginning of CFC1's taxable

year ending on December 31, Year 2, US1 owns all of the single class of stock of CFC1, and no person transferred any CFC1 stock directly or indirectly in Year 1 pursuant to a plan to reduce the percentage of stock (by value) of CFC1 owned by US1. Also as of the beginning of Year 2, CFC1 has no earnings and profits described in section 959(c)(1) or (2), and US1 does not have an extraordinary disposition account with respect to CFC1. As of the end of Year 2, CFC1 has $160x of tested income and no other income. CFC1 has $160x of earnings and profits for Year 2. On October 19, Year 2, US1 sells all of its CFC1 stock to US2 for $100x in a transaction (the ''Stock Sale'') in which US1 recognizes $90x of gain. Under section 1248(a), the entire $90x of gain is included in US1's gross income as a dividend and, pursuant to section 1248(j), the $90x is treated as a dividend for purposes of applying section 245A. At the end of Year 2, under section 951A, US2 takes into account $70x of tested income, calculated as $160x (100% of the $160x of tested income) less $90x, the amount described in section 951(a)(2)(B). The amount described in section 951(a)(2)(B) is the lesser of $90x, the amount of dividends received by US1 with respect to the transferred stock, and $128x, the amount of tested income attributable to the transferred stock ($160x) multiplied by 292/365 (the ratio of the number of days in Year 2 that US2 did not own the transferred stock to the total number of days in Year 2). US1 does not make an election pursuant to paragraph (e)(3)(i) of this section.

(ii) *Analysis*—(A) *Determination of controlling section 245A shareholder and extraordinary reduction of ownership.* Under paragraph (i)(2) of this section, US1 is a controlling section 245A shareholder with respect to CFC1. In addition, the Stock Sale results in an extraordinary reduction with respect to US1's ownership of CFC1. *See* paragraph (e)(2)(i) of this section. The extraordinary reduction occurs because during Year 2, US1 transferred 100% of the CFC1 stock it owned at the beginning of the year and such amount is more than 5% of the total value of the stock of CFC1 at the beginning of Year 2; it also occurs because on the last day of the year the percentage of stock (by value) of CFC1 that US1 owns directly or indirectly (0%) (the end of year percentage) is less than 90% of the stock (by value) of CFC1 that US1 owns directly or indirectly on the day of the taxable year when it owned the highest percentage of CFC1 stock by value (100%) (the initial percentage), no transactions occurred in the preceding year pursuant to a plan to reduce the percentage of CFC1 stock owned by US1, and the difference between the initial percentage and the end of year percentage (100 percentage points) is at least 5 percentage points.

(B) *Determination of extraordinary reduction amount.* Under paragraph (e)(1) of this section, the entire $90x dividend to US1 is an extraordinary reduction amount with respect to US1 because the dividend is at least equal to US1's pre-reduction pro rata share of CFC1's Year 2 tested income described in paragraph (e)(2)(ii)(A) of this section ($160x), reduced by the amount of tested income taken into account by US2, a U.S. tax resident, under paragraphs (e)(2)(ii)(B) and (i)(29) of this section ($70x).

(C) *Determination of ineligible amount.* Under paragraph (b)(2) of this section, with respect to US1 and the dividend of $90x, the ineligible amount is $90x, the sum of 50% of the extraordinary disposition amount ($0) and extraordinary reduction amount ($90x). Therefore, with respect to the dividend received of $90x, no portion is eligible for the dividends received deduction allowed under section 245A(a).

(iii) *Alternative facts—election to close CFC's taxable year.* The facts are the same as in paragraph (j)(4)(i) of this section (the facts of this *Example 3*), except that, pursuant to paragraph (e)(3)(i) of this section, US1 elects to close CFC1's Year 2 taxable year for all purposes of the Internal Revenue Code as of the end of October 19, Year 2, the date on which the Stock Sale occurs; in addition, US1 and US2 enter into a written, binding agreement that US1 will elect to close CFC1's Year 2 taxable year. Accordingly, under section 951A(a), US1 takes into account 100% of CFC1's tested income for the taxable year beginning January 1, Year 2, and ending October 19, Year 2, and US2 takes into account 100% of CFC1's tested income for the taxable year beginning October 20, Year 2, and ending December 31, Year 2. Under paragraph (e)(3)(i)(A) of this section, no amount is considered an extraordinary reduction amount with respect to US1.

(5) *Example 4. Extraordinary reduction; decrease in section 245A shareholder's pre-reduction pro rata share for amounts taken into account by U.S. tax residents*—(i) *Facts.* At the beginning of CFC1's taxable year ending December 31, Year 2, US1 owns all of the single class of stock of CFC1, and no person transferred any CFC1 stock directly or indirectly in Year 1 pursuant to a plan to reduce the percentage of stock (by value) of CFC1 owned by US1. CFC1 generates $120x of subpart F income during its taxable year ending on December 31, Year 2. On October 1, Year 2, CFC1 distributes a $120x dividend to US1. On October 19, Year 2, US1 sells 100% of its stock of CFC1 to PRS, a domestic partnership, in a transaction in which no gain or loss is realized (the ''Stock Sale''). PRS is owned 50% each by A, an individual who is a citizen of the United States, and B, a foreign individual who is not a U.S. tax resident. On December 1, Year 2, US2 and FP, a foreign corporation, contribute property to CFC1; in exchange, each of US2 and FP receives 25% of the stock of CFC1. PRS owns the remaining 50% of the stock of CFC1. US1 does not make an election pursuant to paragraph (e)(3)(i) of this section.

(ii) *Analysis*—(A) *Determination of controlling section 245A shareholder and extraordinary reduction.* Under paragraph (i)(2) of this section, US1 is a controlling section 245A shareholder with respect to CFC1. In addition, the Stock Sale results in an extraordinary reduction with respect to US1's ownership of CFC1. *See* paragraph (e)(2)(i) of this section. The extraordinary reduction occurs because during Year 2, US1 transferred 100% of the CFC1 stock it owns on the first day of Year 2, and that amount is more than 5% of the total value of the stock of CFC1 at the beginning of Year 2; it also occurs because on the last day of Year 2 the percentage of stock (by value) of CFC1 that US1 owns directly or indirectly (0%) (the end of year percentage) is less than 90% of the highest percentage of stock (by value) of CFC1 that US1 owns directly or indirectly on the day of the taxable year when it owned the highest percentage of CFC1 stock by value (100%) (the initial percentage), no transactions occurred in the preceding year pursuant to a plan to reduce the percentage of CFC1 stock owned by US1, and the difference between the initial percentage and the end of year percentage (100 percentage points) is at least 5 percentage points.

(B) *Determination of pre-reduction pro rata share.* Before the extraordinary reduction, US1 owned 100% of the stock of CFC1. Thus, under paragraph (e)(2)(ii)(A) of this section, the tentative amount of US1's pre-reduction pro rata share of CFC1's subpart F income is $120x. A and US2 are U.S. tax residents pursuant to paragraph (i)(29) of this section because they are United States persons described in section 7701(a)(30)(A) or (C). Thus, US1's pre-reduction pro rata share amount is subject to the reduction described in paragraph (e)(2)(ii)(B) of this section because U.S. tax residents directly or indirectly acquire stock of CFC1 from US1 or CFC1 during the taxable year in which the extraordinary reduction occurs. With respect to US1's pre-reduction pro rata share of CFC1's subpart F income, the reduction equals the amount of subpart F income of CFC1 taken into account under section 951(a) by these U.S. tax residents.

(C) *Determination of decrease in pre-reduction pro rata share for amounts taken into account by U.S. tax resident.* On December 31, Year 2, both PRS and US2 will be United States shareholders with respect to CFC1 and will include in gross income their pro rata share of CFC1's subpart F income under section 951(a). With respect to US2, this amount will be $30x, which is equal to 25% of CFC1's subpart F income for the taxable year. With respect to PRS, its pro rata share of $60x under section 951(a)(2)(A) (50% of $120x) will be reduced under section 951(a)(2)(B) by $48x. The section 951(a)(2)(B) reduction is equal to the lesser of the $120x dividend paid with respect to those shares to US1 or $48x (50% × $120x × 292/365, the period during the taxable year that PRS did not own CFC1 stock). Thus, PRS includes $12x in gross income pursuant to section 951(a). Of this amount, $6x is allocated to A (as a 50% partner of PRS) and, therefore, treated as taken into account by A under paragraphs (e)(2)(ii)(B) and (g)(6) of this section. Thus, A and US2 take into account a total of $36x of CFC1's subpart F income under section 951(a). This amount reduces US1's pre-reduction pro rata share of CFC1's subpart F income to $84x ($120x − $36x) under paragraph (e)(2)(ii)(B) of this section. CFC1 did not generate tested income during the taxable year and, therefore, no amount is taken into account under section 951A with respect to CFC1, and US1 has no pre-reduction pro rata share with respect to tested income of CFC1.

(D) *Determination of extraordinary reduction amount.* Under paragraph (e)(1) of

this section, the extraordinary reduction amount equals $84x, which is the lesser of the amount of the dividend received by US1 from CFC1 during Year 2 ($120x) and the sum of US1's pre-reduction pro rata share of CFC1's subpart F income ($84x) and tested income ($0).

(E) *Determination of ineligible amount.* Under paragraph (b)(2) of this section, with respect to US1 and the dividend of $120x, the ineligible amount is $84x, the sum of 50% of the extraordinary disposition amount ($0) and extraordinary reduction amount ($84x). Therefore, with respect to the dividend received by US1 from CFC1, $36x ($120x − $84x) is eligible for a section 245A deduction.

(6) *Example 5. Controlling section 245A shareholder*—(i) *Facts.* US1 and US2 own 30% and 25% of the stock of CFC1, respectively. FP, a foreign corporation that is not a CFC, owns all of the stock of US1 and US2. FP owns the remaining 45% of the stock of CFC1. On September 30, Year 2, US1 sells all of its stock of CFC1 to US3, a domestic corporation that is not a related party with respect to FP, US1, or US2. No person transferred any stock of CFC1 directly or indirectly in Year 1 pursuant to a plan to reduce the percentage of stock (by value) of CFC1 owned by US1.

(ii) *Analysis.* Under paragraph (i)(21) of this section, US1 is a section 245A shareholder with respect to CFC1, an SFC. Because US1 owns, together with US2 and FP (related persons with respect to US1), more than 50% of the stock of CFC1, US1 is a controlling section 245A shareholder of CFC1. The sale of US1's CFC1 stock results in an extraordinary reduction occurring with respect to US1's ownership of CFC1. The extraordinary reduction occurs because during Year 2, US1 transferred 100% of the stock of CFC1 that it owned at the beginning of the year and that amount is more than 5% of the total value of the stock of CFC1 at the beginning of Year 2; it also occurs because on the last day of the year the percentage of stock (by value) of CFC1 that US1 directly or indirectly owns (0%) (the end of year percentage) is less than 90% of the stock (by value) of CFC1 that US1 directly or indirectly owned on the day of the taxable year when it owned the highest percentage of CFC1 stock by value (30%) (the initial percentage), no transactions occurred in the preceding year pursuant to a plan to reduce the percentage of CFC1 stock owned by US1, and the difference between the initial percentage and end of year percentage (30 percentage points) is at least 5 percentage points.

(7) *Example 6. Limitation of section 954(c)(6) exception with respect to an extraordinary reduction.* (i) *Facts.* At the beginning of CFC1 and CFC2's taxable year ending on December 31, Year 2, US1 and A, an individual who is a citizen of the United States, own 80% and 20% of the single class of stock of CFC1, respectively. CFC1 owns 100% of the stock of CFC2. Both US1 and A are United States shareholders with respect to CFC1 and CFC2, and US1 and A are not related parties with respect to each other. No person transferred CFC2 stock directly or indirectly in Year 2 pursuant to a plan to reduce the percentage of stock (by value) of CFC2 owned by US1, and US1 does not have an extraordinary disposition account with respect to CFC2. At the end of Year 2, and without regard to any distributions during Year 2, CFC2 had $150x of tested income and no other income, and CFC1 had no income or expenses. On June 30, Year 2, CFC2 distributed $150x as a dividend to CFC1, which would qualify for the exception from foreign personal holding company income under section 954(c)(6) but for the application of this section. On August 7, Year 2, CFC1 sells all of its CFC2 stock to US2 for $100x in a transaction (the ''Stock Sale'') in which CFC1 realizes no gain or loss. At the end of Year 2, under section 951A, US2 takes into account $60x of tested income, calculated as $150x (100% of the $150x of tested income) less $90x, the amount described in section 951(a)(2)(B). The amount described in section 951(a)(2)(B) is the lesser of $150x, the amount of dividends received by CFC1 during Year 2 with respect to the transferred stock, and $90x, the amount of tested income attributable to the transferred stock ($150x) multiplied by 219/365 (the ratio of the number of days in Year 2 that US2 did not own the transferred stock to the total number of days in Year 2). US1 does not make an election pursuant to paragraph (e)(3)(i) of this section.

(ii) *Analysis*—(A) *Determination of controlling section 245A shareholder and extraordinary reduction of ownership.* Under paragraph (i)(2) of this section, US1 is a controlling section 245A shareholder with respect to CFC2, but A is not. In addition, the Stock Sale results in an extraordinary reduction with respect to US1's ownership of CFC2. *See* paragraph (e)(2)(i) of this section. The extraordinary reduction occurs because during Year 2, US1 transferred indirectly 100% of the CFC2 stock it owned at the beginning of the year and such amount is more than 5% of the total value of the stock of CFC2 at the beginning of Year 2; it also occurs because on the last day of the year the percentage of stock (by value) of CFC2 that US1 owns directly or indirectly (0%) (the end of year percentage) is less than 90% of the stock (by value) of CFC2 that US1 owns directly or indirectly on the day of the taxable year when it owned the highest percentage of CFC2 stock by value (80%) (the initial percentage), no transactions occurred in the preceding year pursuant to a plan to reduce the percentage of CFC2 stock owned by US1, and the difference between the initial percentage and the end of year percentage (80 percentage points) is at least 5 percentage points. Because there is an extraordinary reduction with respect to CFC2 in Year 2 and CFC1 received a dividend from CFC2 in Year 2, under paragraph (f)(1) of this section, it is necessary to determine the limitation on the amount of the dividend eligible for the exception under section 954(c)(6).

(B) *Determination of tiered extraordinary reduction amount.* The limitation on the amount of the dividend eligible for the exception under section 954(c)(6) is based on the tiered extraordinary reduction amount. The sum of the amount of subpart F income and tested income of CFC2 for Year 2 is $150x, and immediately before the extraordinary reduction, CFC1 held 100% of the stock of CFC2. Additionally, US2 is a U.S. tax resident as defined in paragraph (i)(29) of this section because it is a United States person described in section 7701(a)(30)(A) or (C), and US2 has a pro rata share of $60x of tested income under section 951A with respect to CFC2. Accordingly, under paragraph (f)(2) of this section, the tiered extraordinary reduction amount is $90x (($150x × 100%) − $60x).

(C) *Limitation of section 954(c)(6) exception.* Under paragraph (f)(1) of this section, the portion of the $150x dividend from CFC2 to CFC1 that is eligible for the exception to foreign personal holding company income under section 954(c)(6) is $60x ($150x − $90x). To the extent that the $90x that does not qualify for the exception gives rise to additional subpart F income to CFC1, both US1 and A will take into account their pro rata share of that subpart F income under section 951(a)(2) and § 1.951–1(b) and (e).

(k) *Applicability date.* This section applies to distributions occurring after December 31, 2017.

(l) *Expiration date.* The applicability of this section expires June 14, 2022.

■ **Par. 3.** Section 1.954(c)(6)–1T is added to read as follows:

§ 1.954(c)(6)–1T Certain cases in which section 954(c)(6) exception not available (temporary).

(a) *Cross-references to other rules.* For a non-exclusive list of rules that limit the applicability of the exception to foreign personal holding company income under section 954(c)(6), see—

(1) Section 1.245A–5T(d) (rules regarding the application of section 954(c)(6) to extraordinary disposition amounts);

(2) Section 1.245A–5T(f) (rules regarding the application of section 954(c)(6) to tiered extraordinary reduction amounts)

(3) Section 1.245A(e)–1(c) (rules regarding tiered hybrid dividends);

(4) Section 1.367(b)–4(e)(4) (rules regarding income inclusion and gain recognition in certain exchanges following an inversion transaction);

(5) Section 964(e)(4)(A) (rules regarding certain gain from the sale or exchange of stock that is recharacterized as a dividend); and

(6) Section 1.7701(l)–4(e) (rules regarding recharacterization of certain transactions following an inversion transaction).

(b) *Applicability date.* This section applies on or after June 14, 2019.

(c) *Expiration date.* The applicability of this section expires June 14, 2022.

■ **Par. 4.** Section 1.6038–2T is added to read as follows:

§ 1.6038–2T Information returns required of United States persons with respect to annual accounting periods of certain foreign corporations beginning after December 31, 1962 (temporary).

(a) through (e) [Reserved].

(f)(1) through (15) [Reserved].

(16) *Dividends for which section 245A deduction or section 954(c)(6) exception is limited*—(i) *General rule.* If for the annual accounting period, the corporation distributes or receives a dividend that gives rise to an ineligible amount (as defined in § 1.245A–5T((i)(12)), a tiered extraordinary disposition amount (as defined in § 1.245A–5T(i)(25)), or a tiered extraordinary reduction amount (as defined in § 1.245A–5T(i)(26)), then Form 5471 (or a successor form) must contain such information about the ineligible amount, tiered extraordinary disposition amount, or tiered extraordinary reduction amount, as applicable, in the form and manner and to the extent prescribed by the form, instructions to the form, publication, or other guidance published in the Internal Revenue Bulletin.

(ii) *Transition rule.* If the corporation (or predecessor corporation) distributed or received a dividend that gave rise to an ineligible amount, a tiered extraordinary disposition amount, or a tiered extraordinary reduction amount in an annual accounting period for which the Form 5471 (or successor form) has been filed before the date of publication of these Temporary regulations, the corporation must provide the information described in paragraph (f)(16)(i) of this section on the first Form 5471 (or successor form) filed by the corporation after the issuance of guidance setting forth the form and manner of reporting such information.

(g) through (l) [Reserved].

(m)(1) [Reserved].

(2) *Special rule for paragraph (f)(16).* Paragraph (f)(16) of this section applies with respect to information for annual accounting periods in which a dividend subject to § 1.245A–5T is paid.

(n) *Expiration date.* The applicability of paragraphs (f)(16) and (m) of this section expires June 14, 2022.

Kirsten Wielobob,

Deputy Commissioner for Services and Enforcement.

Approved: June 4, 2019.

David J. Kautter,

Assistant Secretary of the Treasury (Tax Policy).

[FR Doc. 2019–12442 Filed 6–14–19; 4:15 pm]

BILLING CODE 4830–01–P

FEDERAL REGISTER

Vol. 84 Tuesday,

No. 117 June 18, 2019

Part III

Department of the Treasury

Internal Revenue Service

26 CFR Part 1

Limitation on Deduction for Dividends Received From Certain Foreign Corporations and Amounts Eligible for Section 954 Look-Through Exception; Proposed Rule

DEPARTMENT OF THE TREASURY

Internal Revenue Service

26 CFR Part 1

[REG–106282–18]

RIN 1545–BP35

Limitation on Deduction for Dividends Received From Certain Foreign Corporations and Amounts Eligible for Section 954 Look-Through Exception

AGENCY: Internal Revenue Service (IRS), Treasury.

ACTION: Notice of proposed rulemaking by cross-reference to temporary regulations.

SUMMARY: The Rules and Regulations section of this issue of the **Federal Register** contains temporary regulations under the Internal Revenue Code (the ''Code'') that limit the dividends received deduction available for certain dividends received from current or former controlled foreign corporations. The temporary regulations also contain rules that limit the applicability of the exception to foreign personal holding company income for certain dividends received by upper-tier controlled foreign corporations from lower-tier controlled foreign corporations and temporary regulations to facilitate administration of certain rules in the temporary regulations. The temporary regulations affect certain U.S. persons that are domestic corporations that receive certain dividends from current or former controlled foreign corporations or are United States shareholders of upper-tier controlled foreign that receive certain dividends from lower-tier controlled foreign corporations.

DATES: Written or electronic comments and requests for a public hearing must be received by September 16, 2019.

ADDRESSES: Send submissions to: CC:PA:LPD:PR (REG–106282–18), Room 5203, Internal Revenue Service, PO Box 7604, Ben Franklin Station, Washington, DC 20044. Submissions may be hand-delivered Monday through Friday between the hours of 8 a.m. and 4 p.m. to CC:PA:LPD:PR (REG–106282–18), Courier's Desk, Internal Revenue Service, 1111 Constitution Avenue NW, Washington, DC 20224. Alternatively, taxpayers may submit comments electronically, via the Federal eRulemaking Portal at *http://www.regulations.gov* (IRS REG–106282–18).

FOR FURTHER INFORMATION CONTACT: Concerning the proposed regulations, Logan M. Kincheloe, (202) 317–6937; concerning submission of comments and/or requests for a hearing Regina Johnson at (202) 317–6901 (not toll-free numbers).

SUPPLEMENTARY INFORMATION:

Background and Explanation of Provisions

Temporary regulations in the Rules and Regulations section of this issue of the **Federal Register** amend 26 CFR 1. The temporary regulations limit the section 245A dividends received deduction for certain dividends from current or former controlled foreign corporations as well as the section 954(c)(6) exception to foreign personal holding company income for certain dividends received by an upper-tier controlled foreign corporation from a lower-tier controlled foreign corporation. The text of those regulations also serves as the text of these regulations. The preamble to the temporary regulations explains the temporary regulations and these proposed regulations.

Special Analyses

I. Paperwork Reduction Act

The collections of information contained in these proposed regulations are explained in the temporary regulations under sections 245A, 954(c)(6), and 6038 published elsewhere in this issue of the **Federal Register**.

II. Regulatory Flexibility Act

It is hereby certified that this rulemaking will not have a significant economic impact on a substantial number of small entities within the meaning of section 601(6) of the Regulatory Flexibility Act (5 U.S.C. chapter 6).

The small entities that are subject to proposed § 1.245A–5 are small entities that are U.S. shareholders of certain foreign corporations that are otherwise eligible for the section 245A deduction on distributions from the foreign corporation. Additionally, to be subject to the proposed regulations, the foreign corporation that is owned by the small entity must have engaged in certain related party transactions described in Part II.B of the Explanation of Provisions section of the preamble to the temporary regulations, or the U.S. shareholder must have transferred certain stock in the foreign corporation during the taxable year.

Based on 2014 Statistics of Income tax data, the Department of the Treasury (''Treasury Department'') and the IRS estimate that there are approximately 15,000 U.S. corporations with controlled foreign corporations (''CFCs'') of which approximately half (6,000–9,000) have less than $25 million in gross receipts. Not all of these corporations will be affected by the proposed regulations. In particular, only small U.S. taxpayers with fiscal year CFCs that transfer assets in related party transactions during the gap period, or U.S. taxpayers that transfer more than 10 percent of their stock of a CFC in a taxable year or U.S. taxpayers that reduce their ownership of stock of a CFC by more than 10 percent, have the potential to be affected by these regulations.

The Treasury Department and the IRS have concluded that there is no significant economic impact on such entities as a result of these proposed regulations. To make this determination, the Treasury Department calculated the ratio of estimated global intangible lowed-taxed income (''GILTI'') and subpart F revenue attributable to these businesses to aggregate total sales data (Data on total sales of all U.S. parented companies are drawn from the Bureau of Economic Analysis Interactive Data accessed at this web address in December, 2018: *https://apps.bea.gov/iTable/iTable.cfm?ReqID=2&step=1*) adjusted to reflect the total sales of these businesses. Projected net tax proceeds from GILTI and subpart F are estimated to be below one percent of the sales of U.S. parented multinational enterprises for 2018 through 2027. The tax thus amounts to less than 3 to 5 percent of receipts (as defined in 13 CFR 121.104), an economic impact that the Treasury Department and IRS regard as the threshold for significant under the Regulatory Flexibility Act. This calculated percentage is furthermore an upper bound on the true expected effect of the proposed regulations because not all the GILTI and subpart F revenue estimated to be attributable to small entities will be captured by the proposed regulations. Consequently, the Treasury Department and the IRS have determined that proposed § 1.245A–5 will not have a significant economic impact on a substantial number of small entities.

Accordingly, it is hereby certified that the proposed rule would not have a significant economic impact on a substantial number of small entities. Notwithstanding this certification, the Treasury Department and the IRS invite comments from the public on both the number of entities affected (including whether specific industries are affected) and the economic impact of this proposed rule on small entities.

Pursuant to section 7805(f) of the Code, these regulations have been submitted to the Chief Counsel for Advocacy of the Small Business

Administration for comment on the impact on small businesses.

Comments and Requests for Public Hearing

Before these proposed regulations are adopted as final regulations, consideration will be given to any written or electronic comments that are submitted timely to the IRS as prescribed in this preamble under the **ADDRESSES** heading. Comments are requested on all aspects of the proposed regulations, and specifically on the issues identified in Part II.B and Part III.A of the Explanation of Provisions section and the Parts I and II of the Special Analysis section of the preamble to the temporary regulations. All comments will be available at *www.regulations.gov* or upon request. A public hearing will be scheduled if requested in writing by any person that timely submits written comments. If a public hearing is scheduled, then notice of the date, time, and place for the public hearing will be published in the **Federal Register**.

Drafting Information

The principal author of the proposed regulations is Logan M. Kincheloe, Office of Associate Chief Counsel (International). However, other personnel from the Treasury Department and the IRS participated in their development.

List of Subjects in 26 CFR Part 1

Income taxes, Reporting and recordkeeping requirements.

Proposed Amendments to the Regulations

Accordingly, 26 CFR part 1 is proposed to be amended as follows:

PART 1—INCOME TAXES

■ **Paragraph 1.** The authority citation for part 1 is amended by adding sectional authorities for §§ 1.245A–5 and 1.954(c)(6)-1 in numerical order to read in part as follows:

Authority: 26 U.S.C. 7805 * * *

Section 1.245A–5 also issued under 26 U.S.C. 245A(g), 951A(a), 954(c)(6), and 965(o)

* * * * *

Section 1.954(c)(6)–1 also issued under 26 U.S.C. 954(c).* * *

■ **Par. 2.** Reserved sections 1.245A–1 through and § 1.245A–5 are added to read as follows:

Sec.
1.245A–1 [Reserved].
1.245A–2 [Reserved].
1.245A–3 [Reserved].
1.245A–4 [Reserved].
1.245A–5 Limitation of section 245A deduction and section 954(c)(6) exception.

§ 1.245A–5 Limitation of section 245A deduction and section 954(c)(6) exception.

The text of proposed § 1.245A–5 is the same as the text of § 1.245A–5T published elsewhere in this issue of the **Federal Register**.

■ **Par. 3.** Section 1.954(c)(6)–1 is added to read as follows:

§ 1.954(c)(6)–1 Certain cases in which section 954(c)(6) exception not available.

The text of proposed § 1.954(c)(6)-1 is the same as the text of § 1.954(c)(6)–1T published elsewhere in this issue of the **Federal Register**.

■ **Par. 4.** Section 1.6038–2 is amended by:

■ 1. Adding reserved paragraphs (f)(13) through (15)

■ 2. Adding paragraph (f)(16).

■ 3. Revising paragraph (m).

The additions and revision read as follows:

§ 1.6038–2 Information returns required of United States persons with respect to annual accounting periods of certain foreign corporations beginning after December 31, 1962.

* * * * *

(f) * * *

(13) through (15) [Reserved].

(16) The text of proposed § 1.6038–2(f)(16) is the same as the text of § 1.6038–2T(f)(16) published elsewhere in this issue of the **Federal Register**.

* * * * *

(m) The text of proposed § 1.6038–2(m) is the same as the text of § 1.6038–2T(m) published elsewhere in this issued of the **Federal Register**.

Kirsten Wielobob,

Deputy Commissioner for Services and Enforcement.

[FR Doc. 2019–12441 Filed 6–14–19; 4:15 pm]

BILLING CODE 4830–01–P

Reader Aids

Federal Register

Vol. 84, No. 117

Tuesday, June 18, 2019

CUSTOMER SERVICE AND INFORMATION

Federal Register/Code of Federal Regulations	
General Information, indexes and other finding aids	**202–741–6000**
Laws	**741–6000**
Presidential Documents	
Executive orders and proclamations	**741–6000**
The United States Government Manual	**741–6000**
Other Services	
Electronic and on-line services (voice)	**741–6020**
Privacy Act Compilation	**741–6050**

ELECTRONIC RESEARCH

World Wide Web

Full text of the daily Federal Register, CFR and other publications is located at: **www.govinfo.gov.**

Federal Register information and research tools, including Public Inspection List and electronic text are located at: **www.federalregister.gov.**

E-mail

FEDREGTOC (Daily Federal Register Table of Contents Electronic Mailing List) is an open e-mail service that provides subscribers with a digital form of the Federal Register Table of Contents. The digital form of the Federal Register Table of Contents includes HTML and PDF links to the full text of each document.

To join or leave, go to **https://public.govdelivery.com/accounts/USGPOOFR/subscriber/new**, enter your email address, then follow the instructions to join, leave, or manage your subscription.

PENS (Public Law Electronic Notification Service) is an e-mail service that notifies subscribers of recently enacted laws.

To subscribe, go to **http://listserv.gsa.gov/archives/publaws-l.html and select** *Join or leave the list (or change settings);* then follow the instructions.

FEDREGTOC and **PENS** are mailing lists only. We cannot respond to specific inquiries.

Reference questions. Send questions and comments about the Federal Register system to: **fedreg.info@nara.gov**

The Federal Register staff cannot interpret specific documents or regulations.

FEDERAL REGISTER PAGES AND DATE, JUNE

25493–25678 3
25679–25974 4
25975–26330 5
26331–26542 6
26543–26738 7
26739–27026 10
27027–27192 11
27193–27502 12
27503–27702 13
27703–27906 14
27907–28170 17
28171–28428 18

CFR PARTS AFFECTED DURING JUNE

At the end of each month the Office of the Federal Register publishes separately a List of CFR Sections Affected (LSA), which lists parts and sections affected by documents published since the revision date of each title.

2 CFR

3187 27703

3 CFR

Proclamations:
9897 26313
9898 26315
9899 26317
9900 26319
9901 26321
9902 26323
9903 26737
9904 27501
9905 27699
Executive Orders:
11888 (Amended by Proc. 9902) 26323
13874 27899
Administrative Orders:
Memorandums:
Memorandum of May 24, 2019 27695
Memorandum of May 24, 2019 27697
Notices:
Notice of June 13, 2019 27905
Presidential Determinations:
Presidential Determination 2019–13 27701

5 CFR

894 26543
Proposed Rules:
532 26767
1650 26769
1651 26769

6 CFR

Proposed Rules:
31 25495

7 CFR

760 28171
1430 28171
1493 28185
1728 28186
1755 28186
3434 26544
Proposed Rules:
271 27743
278 27743
340 26514
372 26514

8 CFR

235 27704

9 CFR

79 28202

10 CFR

170 25679
171 25679
Proposed Rules:
50 27209
171 26774
431 28239

12 CFR

50 25975
249 25975
268 27027
329 25975
1041 27907
1248 28202
Proposed Rules:
261 27976

13 CFR

Proposed Rules:
115 25496

14 CFR

21 27707
25 .....25978, 26739, 26741
39 .....25982, 25984, 26331, 26334, 26546, 26548, 26556, 26743, 27193, 27503, 27506, 27508, 27511, 27930, 27932, 28202
71 .....25679, 26341, 26342, 26343, 26558, 26746, 27935, 27937
97 .....26748, 26749
Proposed Rules:
25 26593
39 .....26023, 26025, 26027, 26373, 26598, 26601, 26775, 26778, 26781, 27042, 27990
71 .....25497, 26376, 26377, 27044
121 25499
135 25499

15 CFR

705 26751
740 25986
746 25986
801 27197

16 CFR

1112 28205
1238 28205

17 CFR

240 27708

18 CFR

401 27035
420 27035

21 CFR

1100 27200

1140 27200
1143 27200
1301 28212
1305 28212
1308 ....27938, 27943, 28212
Proposed Rules:
16 27543
1107 27543

22 CFR

42 25989

25 CFR

Proposed Rules:
30 26785

26 CFR

1 ....26559, 27513, 27947, 28214, 28398
Proposed Rules:
1 ....26605, 28426

29 CFR

2520 27952
4022 27713
4044 27713

30 CFR

Proposed Rules:
913 26802

31 CFR

501 27714
510 27714
515 25992
535 27714
536 27714
539 27714
541 27714
542 27714
544 27714
546 27714
547 27714
548 27714
549 27714
560 27714
561 27714
566 27714
576 27714
583 27714
584 27714
588 27714
592 27714
594 27714
595 27714
597 27714
598 27714

32 CFR

171 27201

33 CFR

100 ....25680, 26565, 27036, 27719, 28216
117 ....26764, 27036
147 27036
165 ....25993, 25995, 26567, 26569, 26571, 26572, 26574, 27036, 27039, 27531, 27720, 27956, 27958, 27959, 27960, 27962, 27964, 28219, 28221, 28223, 28225
Proposed Rules:
100 27743
117 27994
165 ....25506, 25721, 25723, 27210

34 CFR

Ch. II 25682
225 25996
Proposed Rules:
Ch. III 26623
600 27404
602 27404
603 27404
654 27404
668 27404
674 27404

36 CFR

Proposed Rules:
220 27544

38 CFR

4 28227
17 ....25998, 26278

39 CFR

20 26345

40 CFR

52 ....26019, 26347, 26349, 27039, 27202
80 26980
180 ....26352, 27966, 28235
271 26359
300 26576
355 27533
Proposed Rules:
52 ....26030, 26031, 26041, 26047, 26049, 26053, 26057, 26379, 26804, 26806, 27046, 27049, 27053, 27055, 27212, 27559, 27566, 27996, 28132
63 25904
70 27055
81 ....26627, 27566
180 26630
239 26632
271 27057
300 ....25509, 25725, 28259
721 27061

42 CFR

22 27968
32 27968
60 27969
412 26360
422 26578
423 ....25610, 26578
438 26578
460 25610
498 26578
Proposed Rules:
Ch. IV 27070
412 28263
413 28263
438 27846
440 27846
460 27846
482 27069
485 27069
495 28264

44 CFR

64 27970
206 25685

45 CFR

88 26580
2105 27721
Proposed Rules:
86 27846
92 27846
147 27846
155 27846
156 27846

46 CFR

10 26580
11 26580
15 26580

47 CFR

1 26363
2 25685
5 25685
15 25685
27 26363
54 27973
64 ....25692, 26364
74 27734
Proposed Rules:
1 ....25514, 26234, 26634, 27998
2 ....25514, 27998
25 25514
27 ....25514, 27998
54 27570
64 ....26379, 28264
96 26634

48 CFR

Ch. 1 ....27494, 27497
15 27494
Proposed Rules:
App. D 27745
App. J 27745
701 27745

49 CFR

541 27205
Proposed Rules:
270 27215
271 27215
1152 26387

50 CFR

17 26393
300 25493
622 ....26022, 27974
635 25707
648 ....26766, 27741
660 25708
665 26394
679 ....25494, 28237
Proposed Rules:
622 27576
648 26634
660 27072

LIST OF PUBLIC LAWS

Note: No public bills which have become law were received by the Office of the Federal Register for inclusion in today's **List of Public Laws**.

Last List June 14, 2019

Public Laws Electronic Notification Service (PENS)

PENS is a free electronic mail notification service of newly enacted public laws. To subscribe, go to *http://listserv.gsa.gov/archives/publaws-l.html*

Note: This service is strictly for E-mail notification of new laws. The text of laws is not available through this service. **PENS** cannot respond to specific inquiries sent to this address.