DEPARTMENT OF TRANSPORTATION

Federal Railroad Administration

49 CFR Parts 229, 231, 236, and 238

[Docket No. FRA–2013–0060, Notice No. 3]

RIN 2130–AC46

Passenger Equipment Safety Standards; Standards for Alternative Compliance and High-Speed Trainsets

AGENCY: Federal Railroad Administration (FRA), Department of Transportation (DOT).

ACTION: Final rule.

SUMMARY: This final rule amends FRA's passenger equipment safety standards using a performance-based approach to adopt new and modified requirements governing the construction of conventional- and high-speed passenger rail equipment. This final rule adds a new tier of passenger equipment safety standards (Tier III) to facilitate the safe implementation of nation-wide, interoperable high-speed passenger rail service at speeds up to 220 mph. While Tier III trainsets must operate in an exclusive right-of-way without grade crossings at speeds above 125 mph, these trainsets can share the right-of-way with freight trains and other tiers of passenger equipment at speeds not exceeding 125 mph. This final rule also establishes crashworthiness and occupant protection performance requirements in the alternative to those currently specified for Tier I passenger trainsets. Together, the Tier III requirements and Tier I alternative crashworthiness and occupant protection requirements remove regulatory barriers and enable use of new technological designs, allowing a more open U.S. rail market. Additionally, the final rule increases from 150 mph to 160 mph the maximum speed for passenger equipment that complies with FRA's Tier II requirements.

DATES: *Effective date.* This final rule is effective January 22, 2019.

Incorporation by reference. The incorporation by reference of certain publications listed in the rule is approved by the Director of the Federal Register as of January 22, 2019.

ADDRESSES: *Docket:* For access to the docket to read background documents or comments received, go to *http://www.regulations.gov* at any time or visit the Docket Management Facility, U.S. Department of Transportation, 1200 New Jersey Avenue SE, Room W12–140 on the Ground level of the West Building, between 9 a.m. and 5 p.m., Monday through Friday, except Federal holidays.

FOR FURTHER INFORMATION CONTACT: Devin Rouse, Staff Director, U.S. Department of Transportation, Federal Railroad Administration, Office of Railroad Safety, Passenger Rail Division, 1200 New Jersey Avenue SE, Washington, DC 20590 (telephone: 202–493–6185); or Michael Hunter, Attorney Adviser, U.S. Department of Transportation, Federal Railroad Administration, Office of Chief Counsel, 1200 New Jersey Avenue SE, Washington, DC 20590 (telephone: 202–493–0368).

SUPPLEMENTARY INFORMATION:

Common Abbreviations

AAR Association of American Railroads
APTA American Public Transportation Association
AW0 ready-to-run weight, empty
CEM crash energy management
CFR Code of Federal Regulations
CG center of gravity
EN EuroNorm
ETF Engineering Task Force
FE finite element
FEA finite element analysis
FRA Federal Railroad Administration
g gravitational acceleration (32.2 feet/second/second)
HSR high-speed rail
in inch(es)
kip kilopound(s)
kN kilo-Newton(s)
kph kilometer(s) per hour
lbf pound(s)-force
mph mile(s) per hour
ms millisecond(s)
MU multiple-unit
OVI occupied volume integrity
PTC positive train control
RIA regulatory impact analysis
ROW right-of-way
RSAC Railroad Safety Advisory Committee
ITM inspection, testing, and maintenance
PTEP Passenger Train Emergency Preparedness
PESS Passenger Equipment Safety Standards
U.S.C. United States Code
UIC International Union of Railways

Table of Contents

I. Executive Summary
II. Statutory and Regulatory Background
A. Statutory Background
B. Implementation of the 1994 Passenger Safety Rulemaking Mandate
III. Development of the Final Rule
IV. Discussion of Comments and Conclusions
A. General Comments
B. Proposed Subpart I and the Inspection, Testing, and Maintenance Requirements for Tier III Passenger Equipment
C. Proposed Subpart J and the Safe Operation Plan for Tier III Passenger Equipment
D. Comments From the NTSB
V. Section-by-Section Analysis
VI. Regulatory Impact and Notices
A. Executive Orders 12866, 13563, and 13771, and DOT Regulatory Policies and Procedures
B. Regulatory Flexibility Act and Executive Order 13272
C. Paperwork Reduction Act
D. Federalism Implications
E. International Trade Impact Assessment
F. Environmental Impact
G. Executive Order 12898 (Environmental Justice)
H. Executive Order 13175 (Tribal Consultation)
I. Unfunded Mandates Reform Act of 1995
J. Energy Impact
K. Analysis Under 1 CFR Part 51

I. Executive Summary

Having considered the public comments in response to FRA's December 6, 2016, proposed rule on standards for alternative compliance and high-speed trainsets, see 81 FR 88006, FRA issues this final rule amending the Passenger Equipment Safety Standards, 49 CFR part 238. This final rule is the product of consensus reached by FRA's Railroad Safety Advisory Committee (RSAC), which accepted the task of reviewing passenger equipment safety needs and programs and recommending specific actions that could be useful to advance the safety of passenger service, including the development of regulatory requirements for the next generation of high-speed trainsets. The RSAC established the Passenger Safety Working Group (''PSWG'' or ''Working Group'') to handle this task and develop recommendations for the full RSAC to consider. In September 2009, the Working Group in turn established the Engineering Task Force (''ETF'' or ''Task Force'') for the purpose of producing a set of technical criteria and procedures to evaluate passenger rail equipment based on alternative designs. This work led to the development of the report entitled ''Technical Criteria and Procedures for Evaluating the Crashworthiness and Occupant Protection Performance of Alternatively Designed Passenger Rail Equipment for Use in Tier I Service'' (''Technical Criteria and Procedures Report'' or ''Report'').[1] The guidance in the Technical Criteria and Procedures Report has assisted railroads and rolling stock manufacturers who have petitioned FRA for waivers from strict compliance with FRA's Tier I passenger equipment crashworthiness standards, and has been useful to FRA in

[1] U.S. Department of Transportation Report No. DOT–FRA–ORD–11/22. Washington, DC: Federal Railroad Administration, Office of Railroad Policy Research and Development, October 2011, available at *http://www.fra.dot.gov/eLib/details/L01292#p4_z50_gD_lRT.*

evaluating such petitions. In addition to developing the criteria in the Report, the ETF's task was expanded to develop formal recommendations to the full RSAC for adopting these alternative crashworthiness and occupant protection criteria into FRA's regulations and to establish minimum safety requirements for the next generation of high-speed trainsets, capable of operating at speeds of up to 220 mph, classified as Tier III passenger equipment. The ETF reached consensus on recommending the adoption of these alternative crashworthiness criteria in 49 CFR part 238 for Tier I passenger equipment. The ETF also reached consensus on criteria for Tier III passenger equipment, specifically trainset structure, side-window glazing, brake systems, interior fittings and surfaces, certain emergency systems and cab equipment, and cab glazing (with the exception of ballistic penetration resistance). The ETF further reached consensus on the definition of Tier III, including when Tier III equipment can operate on shared infrastructure and when the equipment must operate in an exclusive right-of-way. On June 14, 2013, the full RSAC voted to recommend the consensus items to FRA's Administrator, as the basis for a formal rulemaking. This final rule is based on these RSAC recommendations.

This final rule establishes requirements in three main subject areas: (1) Tier III trainset safety standards; (2) alternative crashworthiness and occupant protection performance requirements for Tier I passenger equipment; and (3) the maximum authorized speed for Tier II passenger equipment. The following is a brief overview of the rule organized by subject area and a summary of its economic impact.

Tier III Trainset Safety Standards

This final rule defines Tier III passenger train operations and outlines the minimum safety standards for the use of such trainsets in the United States, focusing on core structural and critical system design criteria. FRA intends for this final rule to facilitate the safe implementation of interoperable high-speed rail service, and enable the use of common infrastructure and promote other efficiencies. The Tier III operating environment is unique by design. Tier III passenger trains are permitted to operate in a shared right-of-way (one shared with freight trains and other tiers of passenger equipment) at speeds up to 125 mph, but must operate in an exclusive right-of-way without grade crossings at speeds exceeding 125 mph, up to 220 mph. The requirements provide for the sharing of rail infrastructure among various types of rail equipment, especially in more urban areas, while providing for dedicated passenger rail service at maximum speeds up to 220 mph.

This final rule also establishes requirements for Tier III trainset structure, window glazing, brake systems, interior fittings and surfaces, certain emergency systems (including window egress and rescue access requirements), and certain cab equipment. To support operational compatibility, the Tier III trainset crashworthiness and occupant protection requirements are predominantly based on the alternative crashworthiness and occupant protection requirements for Tier I passenger equipment and are intended to safely apply to operations at speeds up to 220 mph in a dedicated environment as approved by FRA. Specialized RSAC task groups developed the requirements for braking systems and cab glazing by focusing on the development of performance-based requirements that could be implemented in a technology-neutral manner, wherever possible.

To develop their recommendations, the ETF and full RSAC considered the latest trainset designs and technology available globally, and adapted their recommendations in a manner consistent with the North American operating environment. The intent of these requirements is to ensure that safety and reliability are paramount, while incorporating elements from the most advanced, service-proven technology available throughout the world.

Alternative Crashworthiness Requirements for Tier I Passenger Trainsets

As noted above, FRA is codifying a set of technical evaluation criteria the ETF developed as guidance for those seeking to demonstrate that alternative crashworthiness and occupant protection performance requirements for Tier I passenger trainsets provide a level of safety equivalent to the existing requirements in part 238. FRA intends for the alternative technical criteria to allow the industry greater flexibility to use more contemporary design techniques and more fully apply emerging technology, including crash energy management (CEM) technology, without requiring a waiver of compliance for operating the equipment. The technical criteria are based on established international standards and significant research and testing conducted by the industry and DOT's John A. Volpe National Transportation Systems Center (Volpe Center) over the past 25 years. Codifying the technical criteria dovetails with alternative crashworthiness performance requirements FRA earlier established in part 238 for the front-end structures of cab cars and multiple-unit (MU) locomotives (75 FR 1180), thereby broadening application of such requirements to other main structures.

Tier II Maximum Authorized Speed

On March 13, 2013, FRA issued a final rule (78 FR 16052) to amend the Federal Track Safety Standards to promote the safe interaction of rail vehicles and the tracks they operate on at speeds up to 220 mph. That final rule revised the track geometry and safety limits for various track classes, extended the limits for the highest track speeds from 200 to 220 mph (Class 9 track), and affirmed that the maximum authorized speed for Class 8 track is 160 mph. This final rule establishes the maximum authorized operating speed for Tier II passenger equipment consistent with the limits for Class 8 track. However, it is important to note that existing Tier II operations FRA has approved to operate at speeds up to 150 mph are still required to provide sufficient testing and vehicle/track interaction performance data required under 49 CFR 213.329 and 238.111, and obtain FRA approval before any operations occur at the new maximum authorized speed of 160 mph.

Economic Analysis

This final rule expands and makes more flexible FRA's Passenger Equipment Safety Standards. FRA believes this final rule will have a net cost savings effect on the passenger rail industry and society as a whole, along with safety benefits.

Specifically, the final rule will generate cost savings benefits by enabling high-speed rail operators to avoid new right-of-way acquisition and infrastructure construction for dedicated rail lines in dense urban areas. This is possible because the final rule allows such trains to travel on existing, non-dedicated rail lines, although at slower speeds than permissible for travel on dedicated rail lines.

For traditional passenger rail operations, there are both operational and safety benefits resulting from this final rule. Not issuing the rule would increase costs associated with the acquisition of new passenger trains and could delay new U.S. passenger rail infrastructure projects. The final rule ensures existing and future alternative trainset designs can operate in the U.S.

railroad environment on a widespread basis, beyond the constraints that have been imposed by FRA regulations. This helps avert perpetuating a patchwork of waivers in the U.S. passenger rail market that would, in turn, perpetuate the current unattractiveness of the U.S. passenger equipment market to manufacturers. The final rule allows U.S. trainsets to use technological advances for safety compliance purposes in a way that was previously restricted under the former regulations.

There will also be safety benefits associated with improvement of the existing rail infrastructure to accommodate the operation of new high-speed rail equipment in shared rights-of-way.[2] Additionally, as the requirements herein are largely performance-based standards and not prescriptive requirements, equipment benefits will be generated by passenger rail operators being able to adopt service-proven, safety-equivalent technology and practices and apply future technological advancements.

Over a 30-year period, FRA estimates quantifiable cost savings range from a present value of between $512.5 million to $1.1 billion (when discounted at a 7-percent rate) or between $790.1 million to $1.6 billion (when discounted at a 3-percent rate).[3] Annualized cost savings of this rule are expected to be between $41.3 million and $85.8 million when discounted at a 7-percent rate and between $40.3 million and $84.0 million when discounted at a 3-percent rate.

Over the same 30-year period, FRA estimates the industry will incur costs ranging between $227.7 to $523.3 million (when discounted at a 7-percent rate) or between $351.3 to $808.8 million (when discounted at a 3-percent rate). Annualized costs of this rule are expected to be between $18.4 million and $42.2 million when discounted at a 7-percent rate and between $17.9 million and $41.3 million when discounted at a 3-percent rate. All quantified costs would be for testing and analysis to demonstrate compliance with either the Tier I alternative or Tier III standards.

Over the 30-year period of the analysis, FRA estimates discounted net regulatory cost savings will be between $438.8 million (low range) and $837.8 million (high range) discounted at 3 percent; net regulatory cost savings will be between $284.8 million (low range) and $541.9 million (high range), discounted at 7 percent. Annualized net regulatory cost savings total between $22.4 million and $42.7 million when discounted at a 3-percent rate and between $22.9 million and $43.7 million when discounted at a 7-percent rate.

NET REGULATORY COST SAVINGS

[Quantified estimates using a 30-year period; $ in millions]

Description	Discounted 3%	Discounted 7%
High Range		
Total Costs	$808.8	$523.3
Total Cost Savings	1,646.7	1,065.2
Total Net Cost Savings	837.8	541.9
Annualized Net Cost Savings	42.7	43.7
Low Range		
Total Costs	351.3	227.7
Total Cost Savings	790.1	512.5
Total Net Cost Savings	438.8	284.8
Annualized Net Cost Savings	22.4	22.9

The rulemaking will provide an optional alternative, not a mandate, for railroads to use a different type or design of passenger equipment in Tier I service and will not impose any burden on existing rolling stock or new equipment qualifying under existing regulations. Similarly, the rulemaking will provide a framework for railroads to operate equipment in new Tier III service—it will not impose any burden on existing rolling stock or new equipment qualifying under existing regulations.

Alternatives Considered

One of the main purposes of the final rule is to provide a set of minimum Federal safety requirements for safe operation in the U.S. rail environment of passenger equipment platforms designed to contemporary engineering standards outside of the U.S. Traditionally, U.S. railroad safety regulations evolved as a consequence of specific accidents scenarios, which have led to the identification of specific risks in the operating environment.[4] As FRA stated in its 1999 Passenger Equipment Safety Standards (PESS) final rule, the railroad operating environment in the United States generally requires passenger equipment to operate commingled with very heavy and long freight trains, often over track with frequent grade crossings used by heavy highway equipment. *See* 64 FR 25540, 25541 (May 12, 1999). European passenger operations, on the other hand,

[2] For example, the shared rail infrastructure is presumed to be better maintained to accommodate the new Tier III equipment, and thus all rail traffic operating over that shared infrastructure will benefit from track maintained to tighter tolerances for higher speeds under FRA's track safety standards at 49 CFR part 213. Track that was once maintained to Class 4 or 5 tolerances, may now be maintained to Class 6 or 7 tolerances.

[3] Tier III costs and cost savings are uncertain because they are based on assumptions regarding the future growth of high-speed rail operations and how those operations will be incorporated into the U.S. rail network. It is possible that all costs, cost savings, and benefits relating to Tier III systems, including equipment and infrastructure, will be zero. This could occur if no high-speed rail projects come to fruition over the forecasted horizon. Further, the estimated infrastructure cost savings depend on the assumption of not having to build dedicated HSR track for the whole system (*i.e.,* they represent savings from being able to operate HSR using shared infrastructure). Tier I cost savings from adopting performance-based standards are challenging to quantify, as estimates are based on projecting future changes. However, given that the new regulation's performance standards provide an alternative to more design-based standards, operators would voluntarily comply only if they found it beneficial to do so. The estimated figures in the Regulatory Impact Analysis (RIA) are provided for expository purposes. For both Tier III and Tier I, if the actions that trigger cost savings are not taken, the costs would not be incurred, as the costs and cost savings are two sides of the same actions.

[4] Passenger Equipment Safety Standards, Notice of Proposed Rulemaking, 62 FR 49728, 49729–49731 (Sep. 23, 1997) (discussing differences between the European and U.S. rail operating environments, and describing a range of passenger rail accidents demonstrating the need for comprehensive, passenger equipment safety standards).

are intermingled with freight equipment of lesser weight than in North America. In many cases, highway-rail grade crossings also pose lesser hazards to passenger trains in Europe due to lower highway vehicle weight.

While FRA seeks to continue ensuring the safety risks are adequately addressed for the operating environment, the final rule places special emphasis on measures to avoid those risks rather than simply mitigating them. Importantly, this final rule allows the use of additional types of rolling stock design, which will enable innovation and provide railroads the flexibility to purchase equipment designed to more performance-based and modern requirements. The rule also permits carriers to move forward with a new tier of higher speed rail.

The alternatives FRA considered in establishing the safety requirements for Tier III trainsets are based on European and Japanese industry standards. These options provide a continuum of safety requirements for a range of aspects such as: Varying levels of regulation, market accessibility, benefits and costs, and operational efficiency and safety. FRA prepared a high-level cost comparison of those options based on the key attributes of the alternatives and the effect of those attributes on societal welfare and the regulatory purpose. FRA compared the technical requirements of other established high-speed rail standards to illustrate the primary differences, not make a direct comparison between comparable requirements or standards.

In Europe, passenger rail equipment crashworthiness and occupant protection design standards have been largely standardized by EuroNorms.[5] FRA concluded that there are no significant differences between trains built to the design standards contained in EuroNorms and trains built to meet the crashworthiness and occupant protection requirements in the final rule. FRA estimates that on average trainset prices will increase $310,250 (0.62 percent) per trainset to meet the Tier III requirements in this final rule.

In Japan, railroad safety regulation is governed by the Railway Bureau, Ministry of Land, Infrastructure and Transport, and is codified in the Technical Regulatory Standards on Railways.[6] These technical standards are primarily performance-based and railways have the obligation to conform their operations, equipment, and infrastructure to these standards. In the case of its high-speed rail system, the Tokaido Shinkansen, the railway transports only passengers; the rail line is entirely dedicated to high-speed rail with no conventional trains operating and has full grade separation. These are the significant differences underlying the design of Tokaido Shinkansen trainsets operating in Japan when compared to passenger trainsets currently operating in the U.S. The key to the Japanese high-speed rail network's ongoing safety performance and reliability is the principle of crash avoidance. Modifying this advanced Japanese high-speed trainset to comply with the new Tier III requirements would result in significant additional costs to be interoperable in the U.S. rail system; FRA estimates $4.7 million per trainset. European trains generally would not need carbody, truck, suspension, or brake modifications to comply with the Tier III requirements. However, either the analysis used to demonstrate compliance of the train safety features or components would require modification, or minor design modification(s) would likely be needed, or both.[7] These differences are illustrated in the following:

SUMMARY OF POTENTIAL CHANGES FOR EQUIPMENT DESIGNED TO EUROPEAN STANDARDS TO COMPLY WITH FINAL RULE IN THE U.S.

Engineering analysis difference	Minor modifications required
• Quasi static compression	• Structural integrity of non-cab end.
• Dynamic collision scenario	• Interior fixture attachment.
• Override protection	• Seat crashworthiness.
• Fluid entry inhibition	• Luggage racks.
• Roof and side structure integrity	• Emergency window egress & rescue access windows.
• Glazing	• Emergency lighting.
	• Alerters.

The RIA that accompanies this final rule contains an analysis of regulatory alternatives FRA considered. Specifically, the analysis compares at a general level the costs and benefits of the Tier III requirements to both European and Japanese standards for high-speed trains. The analysis concludes that a hypothetical $50 million European high-speed trainset could be modified to comply with the Tier III requirements with only minor structural modifications and, as indicated above, at little additional cost—about $310,000 per trainset. Modifications are expected to ensure such trainsets safely operate in a U.S. setting. Due to the lack of historical safety information for operations at Tier III speeds in the U.S., FRA was unable to estimate the incremental safety benefit that would be provided by the Tier III requirements as compared to the European technical standards. However, these new requirements are supported by the recommendation of the full RSAC and FRA is confident about the cost-beneficial nature of the final rule. Additionally, the analysis concludes that a hypothetical $50 million Tokaido Shinkansen Japanese high-speed trainset would need significant structural modifications, including those to the carbody, trucks, and suspension, to comply with the Tier III requirements, and, as indicated above, would incur significant additional costs—about $4.7 million per trainset.

FRA is unable to provide an estimate of the expected incremental benefit of the Tier III requirements over the alternatives, but FRA believes these additional costs are justified by the nature of the risks within the U.S. rail operating environment and RSAC's recommendations. Tier III trains in the U.S. will share track with other rail operations, including heavy and long

[5] EuroNorms title derived: ''Standard'' is ''norme'' in French and ''norm'' in German. *https://www.cen.eu/work/ENdev/whatisEN/Pages/default.aspx.*

[6] *http://www.mlit.go.jp/english/2006/h_railway_bureau/Laws_concerning/14.pdf.*

[7] A discussion of the rationale supporting each of the structural requirements under the ''Minor modifications required'' column in the ''Summary of potential changes for equipment designed to European standards to comply with final rule in the U.S.'' table is available under the section-by-section analysis contained in the NPRM. *See* 81 FR 88006, 88027–88028, 88034–88038 (Dec. 6, 2016). As discussed in the NPRM, each requirement was determined as necessary to achieve an equivalent level of safety as provided by conventional Tier I equipment under 49 CFR part 238, subpart C.

freight trains, and operate on track with highway-rail grade crossings and the accompanying risks of colliding with trucks and other highway vehicles.

FRA conducted a qualitative analysis comparing the final rule's Tier I alternative requirements to two alternatives: Not taking any regulatory action or adopting existing international design standards. As discussed in the RIA, trainsets compliant with international design standards (such as European or Japanese) would require extensive modifications to meet Tier I requirements if FRA elected to take no regulatory action. However, under the new Tier I alternative requirements, FRA believes the costs associated with compliance will be similar to those discussed for Tier III equipment.

A second alternative would be to codify EuroNorms as Federal regulations, instead of the new Tier I alternative requirements. This option opens the possibility for manufacturers to accrue savings from fewer modifications; however, such an option would require manufacturers to expend resources that favor a particular technology or approach to equipment design. Additionally, codifying EuroNorms in lieu of the final rule would potentially have required equipment designed to a different standard to incur certain costs related to modifying the equipment to bring it into compliance.

Consequently, regardless of the requirements codified, manufacturers would likely have to modify trainsets to meet the regulatory requirements specified. Importantly, trainsets meeting only a European standard (or Japanese or other international standard) would not be interoperable with existing U.S. passenger or freight equipment. Therefore, this equipment could only operate on an exclusive right-of-way, unable to take advantage of existing infrastructure.

FRA requested and received no public comment on the alternatives presented and discussed. For further discussion, please also see the RIA's ''Alternatives Considered'' section, in which FRA presents more detailed discussion of the impact of the alternatives considered.

FRA did consider the alternative of standalone HSR systems (not physically connected to the general railroad system) operating on an exclusive right-of-way, which would use passenger equipment that complies with European or other international standards but not necessarily with FRA's new requirements. For the reasons discussed below, FRA declined to pursue this alternative. A major tenet of this final rule is to safely facilitate the implementation of nationwide, interoperable HSR service. Standalone systems operating equipment not compliant with FRA's passenger equipment safety standards would significantly limit the interoperability of HSR service. When developing these requirements, FRA did not envision a network of standalone, non-interoperable HSR systems comprising the nationwide network.

Additionally, it would be very costly for a standalone system to attempt to connect with major metropolitan areas because those standalone systems could not take advantage of a major regulatory savings—operating over existing infrastructure. FRA determined that two-thirds to four-fifths of the regulatory cost savings are due to infrastructure cost avoidance for operations electing to use Tier I alternative or Tier III equipment. In particular, interoperability will allow HSR operators to reach into major metropolitan areas where building new, exclusive rights-of-way may not be feasible due to land density, environmental, and other considerations.

An advantage of the standalone alternative is that an individual railroad system could optimize its operations to high levels of performance without necessarily having to adhere to requirements generally applicable to railroad systems in the U.S. However, for such a project to attain that level of performance, it would have to optimize the design of the entire system, not only the passenger equipment. Basically, a standalone system would have to bring together all the other aspects of railroad safety (such as operating practices, signal and train control, and track) that must be applied to the individual system. Given that such an approach covers more than passenger equipment, and would likely necessitate particular right-of-way intrusion protection and other safety requirements not adequately addressed in FRA's regulations, FRA continues to believe that addressing proposals for standalone HSR systems on a case-by-case basis and comprehensively (such as through a rule of particular applicability or other specific regulatory action(s)) is prudent because of the small number of potential operations and the potential for significant differences in their design. Entities considering such operations voluntarily assume the higher costs of building new infrastructure, knowing they cannot take advantage of the cost savings from sharing existing infrastructure.

II. Statutory and Regulatory Background

A. Statutory Background

In September 1994, the Secretary of Transportation (Secretary) convened a meeting of representatives from all sectors of the rail industry with the goal of enhancing rail safety. As one initiative of this Rail Safety Summit, the Secretary announced that DOT would begin developing safety standards for rail passenger equipment over a five-year period. In November 1994, Congress adopted the Secretary's schedule for implementing rail passenger equipment safety regulations and included it in the Federal Railroad Safety Authorization Act of 1994 (the Act), Public Law 103–440, 108 Stat. 4619, 4623–4624 (November 2, 1994). In the Act, Congress also authorized the Secretary to consult with various organizations involved in passenger train operations for purposes of prescribing and amending these regulations and to issue orders under it. *See* section 215 of the Act (codified at 49 U.S.C. 20133).

B. Implementation of the 1994 Passenger Safety Rulemaking Mandate

On May 4, 1998, under section 215 of the Act, FRA published the Passenger Train Emergency Preparedness final rule (PTEP). *See* 63 FR 24629. The PTEP contained minimum Federal safety standards for the preparation, adoption, and implementation of emergency preparedness plans by railroads connected with the operation of passenger trains, including freight railroads hosting the operations of passenger rail service. The rule also established specific requirements for passenger train emergency systems and contained specific requirements for participation in debrief and critique sessions following emergency situations and full-scale simulations.

On May 12, 1999, FRA published the PESS final rule. *See* 64 FR 25540. The PESS established comprehensive safety standards for railroad passenger equipment including requirements for carbody structure and fire safety. FRA subsequently amended the PESS to address petitions seeking FRA's reconsideration of certain requirements contained in the rule. In response to the petitions, FRA grouped issues together and published three sets of amendments to the final rule. *See* 65 FR 41284, Jul. 3, 2000; 67 FR 19970, Apr. 23, 2002; and 67 FR 42892, June 25, 2002.

Since then, FRA has engaged in a number of rulemakings to amend and enhance its passenger safety requirements. On October 19, 2006, FRA

published a final rule addressing various requirements on the inspection, testing, and operation of passenger equipment, and the attachment of safety appliances. *See* 71 FR 61835. On February 1, 2008, FRA published the Passenger Train Emergency Systems final rule promoting passenger occupant safety by addressing emergency communication, emergency egress, and rescue access requirements. *See* 73 FR 6370. FRA also established additional requirements for passenger train emergency systems on November 29, 2013, see 78 FR 71785, revised and clarified its PTEP regulations on March 31, 2014, see 79 FR 18128, and established new standards to improve the integrity of passenger train exterior side door safety systems on December 7, 2015, see 80 FR 76118.

On January 8, 2010, FRA published a final rule enhancing requirements for the structural strength of the front end of cab cars and MU locomotives. *See* 75 FR 1180. FRA included energy-absorption requirements in the 2010 rulemaking to address traditional cab car and MU locomotive designs, with very strong underframes and relatively weaker superstructures, because it is vitally important to provide protection to crewmembers and passengers if the superstructure is impacted. In that rulemaking, FRA applied mature technology and design practice to extend requirements from linear-elastic to elastic-plastic and provided descriptions of allowable deformations without complete failure of the system. Although FRA believed at the time of the rulemaking that the alternative performance requirements would principally apply to shaped-nose equipment designs or CEM designs, or both, FRA also intended for them to apply to any conventional equipment design, as an alternative to the linear-elastic approach. In particular, the alternative performance requirements allow innovative designs that protect the occupied volume for its full height, even without traditional full-height collision and corner post structures, and the rule has been applied to such innovative end frame designs and traditional end frame designs.

III. Development of the Final Rule

This final rule is primarily based on consensus recommendations from the RSAC.[8] *See* 81 FR 88006, 88013. Those recommendations were developed over many years, and began in 2009 when FRA elected to develop, in consultation with the RSAC, alternative criteria and procedures to assess the crashworthiness and occupant protection performance of rail passenger equipment applicable to a wide range of equipment designs to be used in Tier I service. Accordingly, the ETF[9] was established in September 2009, charged with the mission of producing a set of technical criteria and procedures for evaluating petitions for waivers from (or, as appropriate under § 238.201(b), approval of alternative compliance with) one or more of the Passenger Equipment Safety Standards. This work led to the development of the Technical Criteria and Procedures Report, published in 2011. The technical evaluation criteria and procedures in the Report provided a means of establishing whether equipment of an alternative design would result in at least equivalent performance to that of equipment designed in accordance with the structural standards in 49 CFR part 238.

After the ETF developed the Report, the task of the ETF was expanded to: (1) Develop formal recommendations to the full RSAC to adopt the alternative crashworthiness criteria into FRA's regulations; and (2) establish minimum safety requirements for the next generation of high-speed trainsets able to operate at speeds up to 220 mph,[10] classified as Tier III passenger equipment. The work of the ETF and full RSAC culminated with the publication of the NPRM on December 6, 2016. Please see the Technical Background and Overview section of the NPRM, section III, for a more comprehensive discussion on the development of these requirements at 81 FR 88006, 88013–88017.

The comment period was initially scheduled to close on February 6, 2017. However, in a December 12, 2016 letter, APTA requested a 30-day extension of the NPRM's comment period. APTA stated it needed additional time to thoroughly review the NPRM, and review and consolidate comments on the NPRM from its members and affiliates. On February 13, 2017, FRA published a notice in the **Federal Register** reopening the comment period until March 21, 2017. *See* 82 FR 10449. A description and summary of the comments received on the NPRM is discussed below under section IV, Discussion of Comments and Conclusions.

To further benefit from the input of the ETF, FRA convened a meeting of the ETF on May 16–18, 2017, in Washington, DC.[11] During this meeting, FRA discussed proposed responses to the comments received, which was helpful to FRA in crafting the fuller responses to the comments contained in this final rule. Accordingly, FRA did not believe it necessary to bring any issues back to the full RSAC for a formal recommendation. The only issues for which there was no consensus either did not have consensus agreement initially (cab glazing ballistic requirements, which were deferred to FRA to develop) or were generally non-

[8] The RSAC member groups are: American Association of Private Railroad Car Owners (AAPRCO); American Association of State Highway and Transportation Officials (AASHTO); American Chemistry Council; American Petroleum Institute; American Public Transportation Association (APTA); American Short Line and Regional Railroad Association (ASLRRA); American Train Dispatchers Association (ATDA); Association of American Railroads (AAR); Association of State Rail Safety Managers (ASRSM); Association of Tourist Railroads and Railway Museums; Brotherhood of Locomotive Engineers and Trainmen (BLET); Brotherhood of Maintenance of Way Employees Division (BMWED); Brotherhood of Railroad Signalmen (BRS); Chlorine Institute; Federal Transit Administration (FTA);* Fertilizer Institute; Institute of Makers of Explosives; International Association of Machinists and Aerospace Workers; International Association of Sheet Metal, Air, Rail and Transportation Workers (SMART), including the Sheet Metal Workers' International Association (SMWIA) and United Transportation Union (UTU); International Brotherhood of Electrical Workers (IBEW); Labor Council for Latin American Advancement (LCLAA);* League of Railway Industry Women;* National Association of Railroad Passengers (NARP); National Association of Railway Business Women;* National Conference of Firemen & Oilers; National Railroad Construction and Maintenance Association (NRCMA); National Railroad Passenger Corporation (Amtrak); National Transportation Safety Board (NTSB);* Railway Supply Institute (RSI); Safe Travel America (STA); Secretaria de Comunicaciones y Transporte (Mexico);* Transport Canada;* Transport Workers Union of America (TWU); Transportation Communications International Union/BRC (TCIU/BRC); and Transportation Security Administration (TSA).* *Indicates associate, non-voting membership.

[9] The ETF member groups are: AAR; AAPRCO; AASHTO, including California Department of Transportation, and Interfleet; APTA, including Alstom, Ansaldo Breda, Bombardier, Central Japan Railway Company (JRC), China South Locomotive and Rolling Stock Corporation (CSR), Denver Regional Transportation District (RTD), East Japan Railway Company, Faiveley Transport, GE Transportation, Japan International Transport Institute, Japan's Ministry of Land, Infrastructure, Transport and Tourism, Kawasaki, Keolis, KPS N.A., LIRR, LTK Engineering Services, Marsh, Metro-North, Nippon Sharyo, Parsons Brinckerhoff, PS Consulting, Safetran Systems, SEPTA, Sharma & Associates, Siemens, Southern California Regional Rail Authority (SCRRA), Stadler, STV, Talgo, Texas Central Railway, Veolia, Voith Turbo, and Wabtec; Amtrak; ASLRRA; BLET; European Railway Agency (ERA); NTSB; RSI, including Battelle Memorial Institute, and ENSCO; SMART, including SMWIA and UTU; TCIU/BRC; and Transport Canada.

[10] FRA elected 220 mph as the maximum operating speed for Tier III equipment to remain harmonious with FRA's track safety standards (49 CFR part 213). *See* 78 FR 16052, Mar. 13, 2013 (discussing the reasoning and research behind the 220-mph maximum track speed).

[11] Minutes of this meeting is part of the docket in this proceeding and is available for public inspection.

substantive in nature (the archival of AAR–RP–5104 for incorporation-by-reference). Please see the fuller discussion of each of these topics under the section-by-section analysis of the respective sections (§ 238.721, Glazing, and § 238.735, Seat crashworthiness (passenger and cab crew)).

Please note that the RSAC did not expressly consider FRA's removal of the requirement for a rule of particular applicability to conduct operations at speeds above 150 mph, as specified in subpart I of part 236 of this chapter. See the discussion of changes to § 236.1007 of this chapter in the section-by-section analysis, below. The RSAC also did not consider FRA's changes to §§ 229.3, 229.5, and 231.0 of this chapter. These changes, harmonizing references to the maximum authorized operating speed for Tier II equipment, were not expressly proposed in the NPRM as they were inadvertently omitted. See the discussion of changes to §§ 229.3, 229.5, and 231.0 of this chapter in the section-by-section analysis, below. FRA nonetheless believes the removal of language from part 236 and the harmonization of parts 229 and 231 are consistent with the RSAC recommended approach in this rulemaking.

IV. Discussion of Comments and Conclusions

As noted above, on February 13, 2017, FRA reopened the comment period for the NPRM that closed on February 6, 2017, in response to a request received from APTA. *See* 82 FR 10449 (Feb. 13, 2017). During the entire comment period, FRA received comments from two individuals and the following seven entities: Alstom Transportation, Inc. (Alstom); APTA; East Japan Railway Company (JR East); Italcertifier, SPA; LTK Engineering Services (LTK); Siemens; and Texas Central Railroad, LLC (TCRR). The comments were all supportive of the rulemaking, and FRA appreciates the commenters for the time and effort put into each of the comments received. FRA will first discuss the comments that are applicable to the rulemaking, generally. Responses to comments on specific sections of the rule are discussed in the section-by-section analysis, or in the Regulatory Impact and Notices portion of this final rule, with the provisions and statements to which they specifically relate. FRA makes clear that the order of the discussion is not meant to imply that FRA is prioritizing one commenter over another.

As noted above, following the submission of these written comments, FRA convened the Engineering Task Force to consider and discuss the comments and to help achieve a fuller understanding of the comments received and recommendations for this final rule. As a result, certain of these comments have been superseded by changes made in the rule text from the NPRM to this final rule, and they should not necessarily be understood to reflect the positions of the commenters with respect to the requirements of the final rule. Nevertheless, FRA is setting out all the comments received and is responding to each of them, either here, or in the pertinent section-by-section analysis or Regulatory Impact Notice provision, so that FRA's positions are clearly understood. In addressing these comments and developing this final rule, FRA has relied on information contained in comments, RSAC meeting minutes, memoranda, and other materials in the docket for this rulemaking.

A. General Comments

APTA, in its comment, stated that it is very supportive of the ''Tier III approach.'' APTA further stated that the Tier III crashworthiness and occupant protection requirements permit Tier III trainsets to operate in a shared right of way with conventional passenger and freight rail equipment at speeds below 125 mph (Tier I environment). This type of interoperability has the potential to have a safe and cost-effective approach to implementing high-speed rail as it permits the use of internationally service-proven high-speed rail equipment and also the use of existing infrastructure for lower speed operation. FRA appreciates APTA's support on FRA's approach to permit Tier III equipment to be interoperable at speeds not exceeding 125 mph. APTA further noted that FRA described very well an advantage of a standalone system to be the system's potential to optimize its operations to a high level of performance.

In both their comments, APTA and TCRR recommended that FRA adopt a definition for ''Tier IV system.'' For the reasons discussed in the section-by-section analysis for § 238.5, below, FRA is not including a definition for ''Tier IV system'' in this final rule. However, APTA's and TCRR's comments on this topic went beyond the definition of a Tier IV system and touched on FRA's discussion in the NPRM of Alternatives Considered under the Executive Summary. 81 FR 88006, 88009.

Additionally, APTA, as part of its comment, noted that the regulation references several APTA standards by a ''date certain'' for incorporation by reference. APTA further noted that many of those standards will be updated ''in the near future'' and recommended that the latest versions of the standards be referenced. APTA also recommended, more generally, that all existing references to APTA standards within part 238 be updated in the final rule. FRA must incorporate by reference updated technical standards according to 1 CFR part 51. To the extent possible, FRA has included for incorporation by reference the most up-to-date APTA standards that were under consideration in this rulemaking. Under the section-by-section analysis, FRA has indicated where it has revised references from the initial versions of APTA standards to refer to the most recent editions instead. With respect to updating references to APTA standards in part 238, generally, FRA will address this issue in another rulemaking effort in which FRA reviews and updates, as necessary, all references to relevant technical standards in part 238, because part 238 incorporates by reference technical standards from a number of different industry consensus organizations.

Alstom commented on § 238.15, Movement of passenger equipment with power brake defects, asking FRA if a reference for Tier III equipment will be added where there is currently a reference to Tier II. Alstom also commented more generally whether Tier II requirements will be analyzed on a case-by-case basis and extended to apply to Tier III equipment. Alstom comments on § 238.15 are outside the intended scope of this rulemaking. Due to the unique nature of Tier III equipment and operations, FRA believes that more consideration and analysis are necessary in developing appropriate regulatory requirements addressing the specific safety concerns implicated. Accordingly, FRA believes it appropriate to seek public comment on any proposal on this topic as part of a future rulemaking. In the interim, FRA will work with any proposed Tier III operation to ensure proper safeguards and procedures are in place to protect the movement of defective Tier III equipment.

Italcertifier, SPA submitted a presentation to the docket in which it outlined six comments. None of those six comments proposed any changes to regulatory text or to FRA's approach to Tier I alternative or Tier III requirements. Among its comments, Italcertifier stated that collision risk is mitigated ''by the presence and efficiency of the train protection systems'' and the crash-avoidance philosophy, and added that trains in Europe must be equipped with an onboard train control system that is integrated with the wayside signal

system. Italcertifier stated, though, that the proposed rule did not account for PTC or such other technology. However, FRA notes that PTC technology is not intended as a replacement for crashworthiness and occupant protection requirements. PTC is a performance-based system requirement that provides collision avoidance and overspeed protection technology for certain accident scenarios that complement, but do not replace, crashworthiness and occupant protection requirements. Additionally, not all accidents are PTC-preventable.

Italcertifier also commented that in Italy ''level crossings'' (highway-rail grade crossings) are not permitted at speeds exceeding 200 km/h (approximately 124 mph) but there is a movement to eliminate such crossings from track with speeds exceeding 160 km/h (approximately 100 mph). Although this has no impact on the regulatory text, FRA notes that such an approach appears consistent with FRA's treatment of grade crossings (permitted on Class 6 track, or at speeds up to 110 mph; permitted subject to FRA approval on Class 7 track, or at speeds up to 125 mph; and prohibited on Class 8 track and above, or at speeds exceeding 125 mph). *See* 49 CFR 213.347. Further, Italcertifier commented that the European standards bodies (*e.g.,* CEN or CENELEC) create technology-neutral standards, which is consistent with FRA's approach under this rule. Italcertifier also expressed its support for creating an interoperable passenger rail network, stating that the decision to have an interoperable high-speed rail system, and not a standalone system except on a case-by-case basis, is completely in line with the European position. Finally, Italcertifier commented that qualifying equipment in Italy requires a series of tests to demonstrate compliance with various European technical standards. This, too, is consistent with FRA's approach.

JR East's comment focused on the economic impacts of the proposed rule. In its comment, JR East articulated that when FRA calculates the costs of modifying Japanese equipment to meet Tier III requirements, FRA should consider not only the initial cost (which FRA estimated at $4.7 million per trainset), but also ''the total cost including operation cost, maintenance cost and the expenses for the suspension of transportation due to accidents.'' FRA has addressed this comment in section 2.1.1 of the regulatory impact analysis, which is included in the docket, and in the economic analysis discussion contained in this final rule. For purposes of the economic analysis, FRA chose to only consider the initial cost of modifying Japanese equipment to meet Tier III requirements. FRA considers that the operation, maintenance, and other related expenses would be unique to each railroad potentially operating the equipment, and therefore the differential cost would only be the expense to modify the equipment.

LTK was very supportive of the rule and the effort put forth by all involved in the ETF. LTK also expressed that the publication of the proposed rule was timely in that industry ''requires clarity'' with respect to applicable safety standards for Tier I alternative and Tier III high-speed trainsets, noting both of which must be capable of operating in mixed service with conventional passenger and freight operations at speeds below 125 mph as a result of a number of ongoing trainset procurements. LTK went on to say that the crashworthiness and occupant protection requirements contained in the proposed rule will facilitate the introduction of international passenger and high-speed trainset designs with minor modifications to enable operation in the North American rail environment. LTK also commented that it agrees with the comments APTA submitted to the docket, stating that the recommended edits in the APTA comments provide additional clarity and are consistent with the basis for consensus reached within the ETF. LTK further commented that APTA is currently in the process of reviewing and renewing its Passenger Rail Equipment Safety Standards and that, as FRA finalizes the rule, FRA should update the incorporation dates of APTA standards to the most recent dates if the standards are updated and approved through APTA prior to final rule publication. FRA makes clear it supports incorporating updated APTA standards and has incorporated by reference the most up-to-date APTA standards in this final rule consistent with the requirements of 1 CFR part 51.

Siemens' comment was very supportive of the rule and of the ETF's work on it. Siemens expressed the belief that the rule's defining of the new equipment tier, Tier III, was timely and is needed to clarify to the industry what types of trainset designs ''can get approved by the FRA.'' Siemens noted this significantly reduces risk for the industry and has its full support. Siemens also expressed its support for the comments submitted by APTA to the docket. Siemens stated it participated in the reviews leading to the submission of the APTA comments and believed they improve the NPRM.

TCRR also voiced support of the rulemaking and of the industry-developed comments submitted by APTA, noting they provide clarification on various requirements proposed in the NPRM and are consistent with the basis for consensus reached within the RSAC ETF. TCRR also submitted substantive comments on specific sections that are addressed in the section-by-section analysis, below.

In addition, FRA received comments on the rulemaking from individuals. One individual stated that he ''strongly support[s] modifying the regulations that make American trains much more expensive and slower than train across much of the rest of the world.'' The commenter urged, to the extent possible, that FRA align its regulations with other major standards (especially European standards) to enable railroads to buy ''off-the-shelf'' trainsets at much lower cost. The commenter stated that this was an easy way to start to reduce regulatory burdens and suggested that FRA's regulations be amended to grant a categorical safe harbor for any trainset that complies with the European safety requirements. FRA has long considered whether adopting European safety requirements would be practical in advancing passenger rail safety in the U.S., given the unique nature of the risks within the U.S. rail operating environment in which passenger trains share track with other rail operations, including heavy and long freight trains, and frequently operate on track with highway-rail grade crossings and the accompanying risks of colliding with trucks and other highway vehicles. 62 FR 49728, 49729–49731 (Sep. 23, 1997). In addressing the safety concerns that are present in the U.S., FRA has instead focused on developing regulations in this rulemaking that are performance-based and technology-neutral to further open the U.S. market to international experience and contemporary design techniques and to harmonize the crashworthiness and occupant protection requirements with those that are established internationally. Further, if a car builder can show that its equipment meets or exceeds the crashworthiness and occupant protection requirements as established by this rule without structural modification through proper modeling and documentation, FRA would not exclude that equipment from operating in the U.S. Specifically, FRA noted in the NPRM that it is important to recognize that differences between the FRA requirements and international technical standards do not mean that in all cases structural modifications are

necessary. Equipment designed to international standards can meet these requirements; the equipment manufacturer must only validate and provide supporting documentation that it does. *See* 81 FR 88006, 88014. Further, FRA notes that in response to its solicitation for comments on the topic of alternative approaches to regulating Tier III equipment (*i.e.,* fully adopting European standards), no international equipment manufacturer (some of whom are members of the ETF) stated that it would be better to simply adopt European crashworthiness standards or offered any other regulatory alternative to the ETF's recommended approach. Accordingly, this supports FRA's approach to addressing crashworthiness and occupant protection requirements in this rule. Further, FRA notes that the commenter's reference to a so-called ''off-the-shelf'' product is misleading, as all common product platforms are modified to fit the specific needs of the customer's specifications, which often reflects varying regulatory standards for the country or service intended.

FRA received a comment from another individual who expressed overall support for the proposed rule and wanted to accommodate NTSB recommendations to the extent possible without excluding the adoption of ''EuroNorm-like trains.'' FRA addresses NTSB's recommendations and comments, below.

B. Proposed Subpart I and the Inspection, Testing, and Maintenance Requirements for Tier III Passenger Equipment

FRA is not adopting the proposed ITM requirements under proposed subpart I in the NPRM. FRA worked with the ETF to develop a more comprehensive set of ITM requirements for Tier III equipment. Indeed, in their comments on the NPRM, both APTA and TCRR cited the likelihood that the requirements in the subpart as proposed would be subject to change based on the ETF's then-ongoing discussion of ITM requirements, and they recommended against including the requirements of proposed subpart I in this final rule.

FRA will work with any proposed Tier III operation so that ITM processes and procedures for an operation's equipment are sufficient to address all safety-critical features. FRA will be guided by the ITM program elements the ETF developed, which may be codified in a future rulemaking.

C. Proposed Subpart J and the Safe Operation Plan for Tier III Passenger Equipment

In the NPRM, FRA proposed to add and reserve a subpart J to contain the requirements for a Safe Operation Plan for Tier III Passenger Equipment (or Tier III Safe Operation Plan). As noted below, APTA commented that this subpart is unnecessary as the information requested by FRA for inclusion in a Tier III Safe Operation Plan would be available to FRA through other regulatory means. Specifically, APTA prepared a matrix recommending changes to various proposed requirements in the NPRM where it believed the desired information should be provided, including the addition of a § 238.110 (Pre-revenue qualification plan) to review specific design review elements. FRA has adopted APTA's recommendations, in whole or in part, in various sections of this final rule (see the specific section-by-section analysis, below), and has not adopted subpart J, as proposed. However, FRA intended the Tier III Safe Operation Plan to be a mechanism allowing flexibility for both the Tier III equipment manufacturer and operator to address, and FRA to review and approve, certain aspects of Tier III equipment or operations not prescriptively defined in the regulation so they can be appropriately tailored. To do so, the Tier III Safe Operation Plan would provide FRA a broad level of oversight during the equipment design period to ensure that safety issues are addressed. FRA therefore remains concerned that APTA's comments do not offer an alternative that provides FRA the same approval oversight for all Tier III equipment or operations matters initially identified for the Tier III Safe Operation Plan. For instance, FRA does not approve railroad operating rules, so referencing a railroad's operating rules to address various matters is not a suitable alternative. Without a Tier III Safe Operation Plan requirement in the rule, some other mechanism for FRA review and approval is necessary.

As noted below, APTA has suggested the addition of a new § 238.110 to handle this review and approval oversight function. However, FRA believes that further work is necessary to develop this alternate approach. The process for how FRA would provide approval is not fully addressed in APTA's proposal, including when that approval must be sought, and what, specifically, needs to be approved, including how certain Tier III operational aspects would be reviewed and approved by FRA. In the interim, FRA will work with any proposed Tier III operation on a case-by-case basis to address safety-critical matters that would otherwise have been identified for inclusion in the proposed Tier III Safe Operation Plan.

D. Comments From the NTSB

The NTSB submitted a letter to the docket asking FRA to include in the final rule provisions to address safety recommendations the NTSB has issued. Specifically, the NTSB asked FRA to add language addressing safety recommendations R–12–41, R–14–74, R–15–01, and R–15–02.

Recommendation R–12–41 arose from a grade crossing accident that occurred in Miriam, NV, in 2011, where a tractor-trailer truck struck the side of an Amtrak train that was passing through the crossing. The NTSB recommended FRA ''[r]equire that passenger railcar doors be designed to prevent fire and smoke from traveling between railcars.'' FRA notes that adding weight or tighter seals to the doors to prevent fire and smoke from traveling between railcars could cause unintended harm. Both sliding and swinging doors interact closely with the surrounding car body structure, at the hinge, track, jamb, pocket, and/or latch. Even minor distortion of that structure due to the forces of collision or derailment, or simply a change in the orientation of the door due to a car being significantly displaced from its upright position, could cause the door to fail to operate as intended. Thus, during an emergency, additional time and effort would be needed to operate the doors, delaying egress and access through those doors.

Recommendation R–14–74 arose from the overspeed derailment of a Metro-North commuter train in Spuyten Duyvil, NY, in 2013. The derailment occurred in a 6-degree left-hand curve where the maximum authorized speed was 30 mph. The train was traveling at 82 mph when it derailed. As a result of the derailment, four people died and at least 61 persons were injured. Metro-North estimated about 115 passengers were on the train at the time of the derailment. Contributing to the severity of the accident was the loss of the window glazing that resulted in the fatal ejection of four passengers from the train. The NTSB recommended FRA ''[d]evelop a performance standard to ensure that windows (*e.g.,* glazing, gaskets, and any retention hardware) are retained in the window opening structure during an accident and incorporate the standard into [49 CFR 238.221 and 238.421] to require that passenger railcars meet this standard.'' As discussed in its responses to the

NTSB,[12] FRA is taking steps to address this recommendation. However, the Metro-North accident was the result of overspeed.[13] Implementation of positive train control should eliminate such overspeed occurrences in passenger service, thereby reducing the likelihood of rollover accidents and fatalities due to ejection through window openings similar to the events involved in the Metro-North accident. At this time, though, FRA is not amending § 238.221 or § 238.421, as the NTSB's recommendations are outside the intended scope of this rulemaking.

Recommendations R–15–01 and R–15–02 arose from a train-to-train collision between two Metro-North commuter trains in Bridgeport, CT, in 2013. An eastbound train was struck by a westbound train after the eastbound had derailed. As a result of the collision, at least 65 persons were injured. Metro-North estimated about 250 passengers were on each train at the time of the accident. In R–15–01, the NTSB recommended FRA ''[r]evise [49 CFR 238.213] to require the existing forward-end corner post strength requirements for the back-end corner posts of passenger railcars.'' In R–15–02, the NTSB recommended FRA ''[r]evise [49 CFR part 238] to incorporate a certificate of construction, similar to the one found at [49 CFR 179.5], and require that the certificate be furnished prior to the in-service date of the railcar.'' FRA recognizes the importance of structurally sound passenger cars and believes it has achieved the intent of these recommendations. After fully analyzing FRA's current safety data, evaluating FRA's existing safety regulations, and reviewing the NTSB's findings, FRA determined that its current regulations do address the NTSB's underlying safety concerns.[14] FRA continues to use RSAC to identify and analyze potential safety issues and the need for further rulemaking. At this time, RSAC (and by extension, FRA) is not considering any changes to the strength requirements for passenger car corner posts.

[12] *https://www.ntsb.gov/safety/safety-recs/_layouts/ntsb.recsearch/Recommendation.aspx?Rec=R-14-074.*

[13] *http://www.ntsb.gov/investigations/AccidentReports/Pages/RAB1412.aspx.*

[14] *https://www.ntsb.gov/safety/safety-recs/_layouts/ntsb.recsearch/Recommendation.aspx?Rec=R-15-001 https://www.ntsb.gov/safety/safety-recs/_layouts/ntsb.recsearch/Recommendation.aspx?Rec=R-15-002.*

V. Section-by-Section Analysis

Part 229—Railroad Locomotive Safety Standards

Subpart A—General

Section 229.3 Applicability

FRA is revising § 229.3(c) to conform the reference to Tier II maximum authorized speed with this final rule's revision to the definition of ''Tier II.'' FRA is simply changing the reference to ''150 mph'' to ''160 mph,'' reflecting the changes to the maximum authorized speed of Tier II equipment under this rule. This was not expressly discussed in the proposed rule; however, this is merely a conforming technical revision and will not impose any additional regulatory requirements or burdens on the regulated industry.

Section 229.5 Definitions

FRA is revising the definition of ''Tier II'' to conform the maximum authorized operating speed of Tier II passenger equipment in this section (150 mph) with the maximum authorized operating speed of Tier II equipment as specified under § 238.5 of this chapter (160 mph). As a result, the definition of ''Tier II'' under part 229 is revised to mean operating at speeds exceeding 125 mph but not exceeding 160 mph. This was not expressly discussed in the proposed rule; however, this is merely a conforming technical revision and will not impose any additional regulatory requirements or burdens on the regulated industry.

Part 231—Railroad Safety Appliance Standards

Section 231.0 Applicability and Penalties

FRA is revising § 231.0(c) to conform the reference to Tier II maximum authorized speed with the revisions in this final rule. FRA is simply changing the reference to ''150 mph'' to ''160 mph,'' reflecting the changes to the maximum authorized speed of Tier II equipment under this rule. This was not expressly discussed in the proposed rule; however, this is merely a conforming technical revision and will not impose any additional regulatory requirements or burdens on the regulated industry.

Part 236—Rules, Standards, and Instructions Governing the Installation, Inspection, Maintenance, and Repair of Signal and Train Control Systems, Devices, and Appliances

Subpart I—Positive Train Control Systems

Section 236.1007 Additional Requirements for High-Speed Service

FRA is removing paragraph (d) of this section as it is no longer relevant, and redesignating paragraph (e) as paragraph (d) of this section. FRA described the reasons for removing paragraph (d) of this section in the NPRM, see 81 FR 88006, 88017, and did not receive any comments on or objections to the paragraph's removal. As this portion of the final rule is identical to the proposed version, the analysis provided in the NPRM is not being repeated here, and FRA is adopting this change as proposed.

Part 238—Passenger Equipment Safety Standards

Subpart A—General

Section 238.5 Definitions

In this section, FRA is revising the definitions of ''glazing, end-facing'' and ''glazing, side-facing,'' and making technical revisions to the definitions of ''Tier II'' and ''train, Tier II passenger'' to reflect the change in the maximum authorized speed of Tier II passenger equipment from 150 mph to 160 mph. FRA is also adding new definitions for ''Associate Administrator,'' ''Tier III,'' ''trainset, Tier I alternative passenger,'' ''trainset, Tier III,'' and ''trainset unit.'' For the reasons discussed below, FRA is placing the definition of ''cab'' in new § 238.702, and not under this section as proposed in the NPRM.

FRA did not receive any comments on or objections to FRA's proposed revisions or additions to the definitions of ''glazing, end-facing,'' ''glazing, side-facing,'' ''Tier II,'' ''train, Tier II passenger,'' ''Associate Administrator,'' ''Tier III,'' ''trainset, Tier I alternative passenger,'' and ''trainset, Tier III'' and those definitions in this final rule are identical to the proposed versions. 81 FR 88006, 88018–88019. Accordingly, the analysis provided for these definitions in the NPRM is not being repeated here, and FRA is adopting these definitions as proposed.

FRA did receive comments, however, on the proposed new definitions of ''cab'' and ''trainset unit.'' APTA submitted comments suggesting revisions to the proposed definitions of ''cab'' and ''trainset unit,'' and to FRA's existing definition of ''trainset, passenger.'' Additionally, APTA, along

with Alstom, suggested adding a definition for ''conventional locomotive.'' Further, APTA, along with TCRR, suggested adding a definition for ''Tier IV system.'' However, as discussed more fully under new § 238.702, below, FRA is placing the definition of ''cab'' under subpart H to clarify the definition's application. Accordingly, FRA's discussion of APTA's comment on the term ''cab'' is in the section-by-section analysis of new § 238.702, below.

In its comment, APTA suggested that FRA amend its existing definition of ''trainset, passenger'' to provide a more robust definition to clarify when the term is used in other sections of the rule (*e.g.,* § 238.705, Dynamic collision scenario). APTA suggested that the term ''trainset'' means: ''a passenger train where all units within the trainset are semi-permanently coupled to operate as a single consist. A Tier I alternative trainset may be equipped with a conventional locomotive at either end that may not be semi-permanently coupled to the adjacent unit of the trainset.'' APTA reasoned that the specific requirements proposed by the ETF for a Tier III trainset are based on the assumption that all units within the trainset are semi-permanently coupled together, such that units of the trainset can only be coupled or uncoupled at a maintenance facility or other location where personnel can safely get under or between units. Additionally, APTA commented that, because revenue operations can only be conducted using a complete trainset, the collision scenario defined in § 238.705 is based on the operation of a complete trainset, and mentioned that the specific requirements pertaining to safety appliances for Tier III trainsets are also based on the assumption that all units within a trainset are semi-permanently coupled. Further, APTA proposed allowing a passenger trainset, as it would define the term, to be equipped with an automatic coupler in the middle of the trainset configuration so it could be more easily disconnected in a maintenance facility, noting that for such configurations, the requirements of § 238.705(a) would apply to the complete trainset as operated in revenue service. At this time, FRA is not inclined to amend its current definitions of ''trainset, passenger'' or ''train, passenger,'' and is declining to adopt APTA's proposed definition of ''trainset.'' The definition of passenger trainset in § 238.5 applies to all tiers of passenger equipment under part 238. Specifying that trainsets, generally, are all semi-permanently coupled together places too broad a restriction on the method or manner for connecting individual trainset units. However, in this final rule, new § 238.705(a)(6) does include a reference to an ''integrated trainset'' as defined in new § 238.702, to clarify which initial velocity applies to a given trainset. Moreover, FRA recognizes APTA's concern about allowing for an automatic coupler in the middle of a semi-permanently coupled trainset, but believes no change is needed. FRA makes clear that the rule does not preclude the use of automatic coupler arrangements within the consist of a semi-permanently coupled Tier III trainset to facilitate maintenance within a shop facility, provided the coupler arrangements are not used for switching or other operational purposes outside of the protected maintenance environment envisioned by the rule. Of course, if a coupling between Tier III vehicles is not intended to be semi-permanent in nature, then other requirements apply, such as those governing safety appliances.

APTA also recommended clarifying the definition of ''trainset unit,'' which FRA proposed to mean a trainset segment located between connecting arrangements (articulations). In the NPRM, FRA explained this definition would clarify that the proposed requirements may apply to individual vehicles within a trainset consist, but not necessarily to the trainset as a whole. However, in its comment, APTA suggested restating the definition to mean ''any car within a trainset that is semi-permanently coupled to an adjacent car within the trainset.'' FRA is adopting its proposed definition of ''trainset unit'' in the final rule, not APTA's. APTA's suggested definition would be too narrow because, to be considered a trainset unit, a vehicle would require semi-permanent coupling to an adjacent unit. Yet, FRA intends the definition to apply to all tiers of passenger equipment, and therefore not require all configurations of trainsets to be semi-permanently coupled. FRA believes the definition addresses the essential elements constituting a trainset unit without being too specific.

In their comments, both APTA and Alstom requested FRA add a definition of ''conventional locomotive.'' APTA recommended the rule define ''conventional locomotive'' to mean ''a piece of on-track rail equipment with one or more control stands designed to transport a Tier I alternative compliant passenger trainset and which meets the crashworthiness requirements defined in § 229.205 [of this chapter] and the design requirements contained in § 229.206 [of this chapter].'' APTA stated that inclusion of such a definition would provide greater clarity with respect to application of the dynamic collision scenarios under § 238.705. As discussed below under § 238.705, APTA raised concern that because a conventional locomotive will not be used in Tier III service, requiring use of a conventional locomotive for a collision scenario under Tier III requirements would introduce confusion as to which is the correct collision scenario to apply. Alstom, in its comment, indicated that such a definition of ''conventional locomotive'' would clarify it is Tier I equipment governed by 49 CFR part 229 and that the front vehicle of a Tier III Trainset could therefore not be a conventional locomotive. However, FRA is not adding a definition of ''conventional locomotive'' to this § 238.5 of the final rule. APTA's proposed definition would be too narrowly limited to a locomotive used to move Tier I alternative equipment under appendix G to this part. Instead, FRA believes it is more appropriate to more fully explain under § 238.705, below, FRA's intent on how the two dynamic collision scenarios should be applied. As noted above, FRA is adding the term ''integrated trainset'' to § 238.705 to address any confusion about which initial velocity applies to a given trainset.

As mentioned above in the Discussion of Comments and Conclusions, section IV, APTA and TCRR recommended that FRA include in the final rule a definition of ''Tier IV system.'' According to both APTA and TCRR, a ''Tier IV system would mean ''any passenger rail or ground transportation system that operates on an exclusive right-of-way without grade crossings and is governed by a technology-specific rule of particular applicability, or other regulatory means.'' Although amenable to undertaking the development of such a definition, FRA is not accepting APTA's and TCRR's recommendations to include a definition of a Tier IV system in this final rule. Adding such a broad-ranging definition is beyond the intended scope of this rulemaking at this final rule stage.

Section 238.21 Special Approval Procedure

In commenting on this section in the NPRM, Alstom suggested that a reference to Tier III equipment be added in paragraph (a) where there is currently a reference to Tier II. Alstom noted that paragraph (a) includes a cross-reference to § 238.505, which governs approvals for Tier II ITM programs. While FRA agrees that a change to this paragraph will be warranted in the future, doing so

in this rulemaking is premature as there is no equivalent section to reference for Tier III equipment. However, in the interim, FRA will work with any proposed Tier III operation to ensure that the specific ITM program sufficiently addresses the inspection, testing, and maintenance of all safety-critical features of a Tier III trainset.

FRA is revising paragraphs (c)(2) and (d)(2) of this section, as proposed in the NPRM. FRA did not receive any comments on these technical changes. As these paragraphs are identical to those FRA proposed in the NPRM, please see the NPRM for an analysis of the changes, 81 FR 88006, 88050, as it is not being repeated here.

Subpart B—Safety Planning and General Requirements

Section 238.111 Pre-Revenue Service Acceptance Testing Plan

This section contains requirements for pre-revenue service testing of passenger equipment. As proposed in the NPRM, FRA is amending paragraphs (b)(2), (4), (5), (7), and (c) of this section to require railroads to obtain FRA approval before using Tier III passenger equipment that either has not been used in revenue service in the U.S., or has been used in revenue service in the U.S. and is scheduled for a major upgrade or introduction of new technology that affects a safety system on such equipment. The explicit inclusion of a Tier III notification and approval process is consistent with FRA's approach to the implementation of high-speed rail technology. It also provides a formal mechanism for FRA to ensure all required elements of this part are satisfactorily addressed and documented.

In commenting on the NPRM, APTA stated that FRA should separate out from this section issues related to FRA approval of the design of Tier III equipment. APTA therefore suggested that FRA add a new § 238.110, titled ''Pre-revenue qualification plan,'' to require a plan addressing all documents required by subpart H to be submitted for review and approval for Tier III equipment.'' According to APTA, new § 238.110 would contain the requirements of Tier III equipment design that FRA would need to review and approve before Tier III equipment could operate in revenue service. As discussed above under proposed subpart J and the Safe Operation Plan for Tier III Passenger Equipment, the creation of this new section ties into APTA's comment recommending excluding from this final rule the proposed references to a Tier III Safe Operation Plan. (Please see the discussion above, under proposed subpart J, for FRA's response concerning removal of the Tier III Safe Operation Plan.)

FRA recognizes that § 238.111 will need some further revision as new Tier III equipment requirements are established. However, APTA's request to adopt a new § 238.110 exceeds the intended scope of this current rulemaking proceeding.

Subpart C—Specific Requirements for Tier I Passenger Equipment

Section 238.201 Scope/Alternative Compliance

This section sets out the scope of subpart C, which contains specific requirements for Tier I passenger equipment, and also provides compliance alternatives for the use of Tier I passenger equipment. In its comments on the NPRM, APTA agreed with FRA's proposal to amend this section to allow Tier I equipment to comply with alternative crashworthiness and occupant protection requirements in appendix G to this part, instead of certain requirements under subpart C (§§ 238.203, 238.205, 238.207, 238.209(a), 238.211, 238.213, and 238.219). APTA also urged that efforts be undertaken to complete and reach consensus on a separate guidance document for demonstrating the crashworthiness of passenger rail equipment, to assist with the implementation of this rule. FRA is working on generating such a document, as FRA recognizes the importance of providing guidance on the proper application of the alternative crashworthiness and occupant protection requirements of appendix G to this part.

FRA did not receive any additional comments on the proposed revisions to this section as described in the NPRM, 81 FR 88006, 88019–88020, and FRA is adopting this section as proposed. Accordingly, as this portion of the final rule is identical to the proposed version, the analysis provided in the NPRM is not being repeated here.

Sections 238.203, 238.205, 238.207, 238.209, 238.211, 238.213, and 238.219

These sections contain structural and equipment protection requirements for Tier I passenger equipment. FRA did not receive any comments on the proposed revisions to these sections as described in the NPRM, 81 FR 88006, 88020, to reflect the addition of alternative standards in appendix G to this part for Tier I trainsets. As these sections of the final rule are identical to the proposed versions, FRA is adopting them as proposed and the analysis provided in the NPRM for each section is not being repeated here.

Subpart E—Specific Requirements for Tier II Passenger Equipment

Section 238.401 Scope

As discussed in the NPRM, FRA is revising this section to increase the maximum allowable speed for Tier II passenger equipment from 150 mph to 160 mph. This change is consistent with FRA's March 13, 2013, final rule amending and clarifying the Track Safety Standards, which affirmed that the maximum allowable speed on Class 8 track is 160 mph. *See* 78 FR 16052. Further, this change makes the speed range for Tier II passenger equipment consistent with that for Class 8 track in the Track Safety Standards. As specified in § 213.307 of this chapter, Class 8 track encompasses the speed range above 125 mph up to 160 mph—now the same speed range for Tier II passenger equipment. Nonetheless, FRA makes clear this change only increases the maximum operating speed to 160 mph. FRA approval to operate at 160 mph is still needed as this part and other FRA safety regulations require.

In commenting on the NPRM, APTA expressed its support for this change and harmonizing the Track Safety Standards and Passenger Equipment Safety Standards. Separately, APTA stated that it might be appropriate to reexamine Tier II requirements in the future because they were developed prior to the congressional mandate to implement PTC. APTA added that such a reexamination should take into consideration the incident and accident data since the introduction of Amtrak's Acela Express trainsets, along with the corresponding risks associated with future operations and anticipated Northeast Corridor upgrades.

FRA agrees with APTA that if it becomes necessary to reexamine Tier II requirements, it would be appropriate, as always, to consider all relevant safety data available. However, FRA makes clear that the mandate to implement PTC should not be viewed as a replacement for crashworthiness and occupant protection requirements but as a complementary safety measure. Indeed, around the time part 238 was originally published, FRA issued an order of particular applicability for use of the Advanced Civil Speed Enforcement System, a type of PTC system, on Amtrak's Northeast Corridor to support safe train operations at higher speeds. *See* 63 FR 39343 (Jul. 22, 1998)

and subsequent amendments thereto. Moreover, as discussed in the NPRM and in this final rule under § 238.705, not all accidents are PTC-preventable, such as collisions with trespassing highway equipment at grade crossings or with other rolling stock (freight or passenger equipment) during manual operations at speeds 20 mph or below. Accordingly, FRA does not intend to amend the Tier II occupant protection and crashworthiness requirements simply because PTC is installed on the equipment.

FRA did not receive any comments objecting to the revision to this section as described in the NPRM. 81 FR 88006, 88020. As this portion of the final rule is identical to the proposed version, the complete analysis provided in the NPRM is not being repeated here.

Subpart F—Inspection, Testing, and Maintenance Requirements for Tier II Passenger Equipment

Section 238.501 Scope

FRA is revising this section to increase the maximum allowable speed for Tier II passenger equipment from 150 mph to 160 mph. FRA did not receive any comments on the proposed revision to this section as described in the NPRM, 81 FR 88006, 88021, and FRA is adopting it as proposed. Please see the discussion of § 238.401 for further information on this speed change.

Subpart H—Specific Requirements for Tier III Passenger Equipment

This subpart contains specific requirements for Tier III passenger equipment. Many of the requirements under this subpart consider Tier III passenger equipment in terms of an integrated trainset, as that term is now defined under § 238.702, particularly for purposes of crashworthiness and occupant protection requirements. This rule presumes that Tier III trainsets will consist of semi-permanently coupled, articulated, or otherwise ''fixed'' configurations, that are not intended to operate normally as individual vehicles, or in mixed consists (with equipment of another design or operational tier).

The requirements in this subpart are organized into subject areas based on their general applicability: Trainset structure, window glazing, brake systems, interior fittings and surfaces, emergency systems, and cab equipment. FRA intends that the requirements be applied in a manner that is performance-based and technology-neutral, where possible. FRA notes that it intends for certain sections of this subpart to be applied as an integrated set of alternative crashworthiness and occupant protection performance requirements for Tier I passenger equipment as delineated in appendix G to this part. FRA considers this set of requirements to provide an equivalent level of safety to its counterpart set of Tier I requirements in subpart C of this part. As explained in greater detail in the discussion of appendix G below, the rule clarifies which specific Tier III crashworthiness and occupant protection performance requirement should be applied as an alternative set of Tier I counterpart requirements. Specifically, FRA makes clear that if alternative Tier I compliance is sought under appendix G, then all the requirements in appendix G must be met so the integrity of the alternative requirements is maintained.

Section 238.701 Scope

This section sets out the scope of new subpart H. Subpart H contains specific requirements for railroad passenger equipment operating in a shared right-of-way at speeds not exceeding 125 mph, and in an exclusive right-of-way without grade crossings at speeds exceeding 125 mph but not exceeding 220 mph. FRA did not receive any comments on the exclusion of grade crossings or the 125-mph speed limit when grade crossings are present within the right-of-way, or on whether FRA should explicitly apply the 125-mph speed limit only to track located at or near each grade crossing within an exclusive right-of-way. As stated in the NPRM, FRA believes that in most cases new, exclusive rights-of-way designed for Tier III operations will be constructed without highway grade crossings, see 81 FR 88006, 88021. However, in the situation where exclusive rights-of-way include highway grade crossings, but may have long stretches of track without a grade crossing, FRA would expect appropriate operational safeguards to be in place to prevent trainsets from traversing highway grade crossings at speeds exceeding 125 mph. In fact, FRA would expect those operations that include grade crossings in their exclusive rights-of-way to also comply with the requirements of § 213.347 of this chapter.

Section 213.347(a) of this chapter prohibits any grade crossings on Class 8 or 9 track. Whereas Class 8 track is track with an operational speed range from above 125 mph not exceeding 160 mph, Class 9 track is track with an operational speed range from above 160 mph not exceeding 220 mph. Further, § 213.347(b) of this chapter requires a track owner of Class 7 track (track with an operational speed range from above 110 mph not exceeding 125 mph) to submit for FRA's approval a complete description of the proposed warning/barrier system to address the protection of highway traffic and high-speed trains if the track will include highway grade crossings. Section 213.347(b) of this chapter prohibits operations on Class 7 track unless such an FRA-approved warning barrier system is in place and functioning as intended.

Separately, FRA received comments on its proposal to allow passenger seating in the leading unit of a Tier III trainset provided safety issues associated with passengers occupying the leading unit are addressed and mitigated through a comprehensive Tier III Safe Operation Plan. (See the discussion of proposed subpart J and the Safe Operation Plan for Tier III Passenger Equipment, under Discussion of Comments and Conclusions, section IV, above.) APTA stated that addressing safety concerns in a Tier III Safe Operation Plan is unnecessary because those safety concerns are already addressed through other regulatory means. APTA maintained that when Tier III equipment is operating at speeds not exceeding 125 mph, the crashworthiness and occupant protection requirements provide an equivalent level of safety to that of Tier I equipment and sufficient protection is already afforded passengers occupying leading units of Tier III trainsets. Additionally, APTA suggested that when operating above 125 mph, the right-of-way barrier plan required under § 213.361 of this chapter and the HSR–125 plan required under § 236.1007 of this chapter address any additional safety concerns for passengers occupying the leading units of Tier III trainsets, as these two sections guard against unauthorized intrusions into the right-of-way. Accordingly, APTA believed that conducting an additional, comprehensive analysis for the Tier III Safe Operation Plan would be redundant.

Alstom's comment on this section mirrored APTA's comment in substance. Alstom also suggested that the safety considerations that FRA initially sought to address in the Tier III Safe Operation Plan are adequately addressed just as APTA outlined in its comment.

As explained under Discussion of Comments and Conclusions, section IV, above, this section does not refer to a Tier III Safe Operation Plan. This final rule does not require railroads to complete a comprehensive safety analysis specifically addressing and mitigating all safety conditions

associated with passengers occupying the lead unit of a Tier III trainset. Instead, FRA's regulations continue to require, before passengers can occupy the lead unit of a Tier III trainset, that railroads seeking to do so namely have an approved right-of-way plan that complies with the requirements of § 213.361 of this chapter, have an approved PTC Safety Plan that complies with § 236.1007(c) of this chapter, and, as appropriate, comply with § 213.347 of this chapter. These requirements should not place any additional regulatory burden on a Tier III operation as these are all existing regulatory requirements. However, FRA does make clear that prior to any train operation in which passengers other than assigned crew members (*i.e.,* engineers and conductors) occupy the lead unit of a Tier III trainset, the above requirements must be met, regardless of whether operating in revenue service (*i.e.,* whether or not the passengers have paid a fare to ride). Additionally, if a railroad does identify safety concerns involving passengers occupying the lead unit of a Tier III trainset, FRA expects the railroad to properly and adequately address the concerns. Similarly, FRA reserves the right to ensure that the railroad properly and adequately addresses safety concerns involving passengers occupying the lead unit of a Tier III trainset, if FRA's inspection of a Tier III railroad operation identifies such safety concerns.

Finally, as noted earlier, APTA suggested that FRA create a new section, § 238.110, to address compliance review and approval with the requirements of this subpart H. See FRA's discussion of this suggestion under Discussion of Comments and Conclusions, section IV, above.

Section 238.702 Definitions

FRA has added this new section to contain definitions applying specifically to subpart H of this part. This section defines the terms ''cab,'' which was proposed in the NPRM under § 238.5, and ''integrated trainset,'' which is a new term not expressly proposed in the NPRM. FRA determined it will be clearer and more useful to place definitions that are tailored to the application of subpart H in this section, rather than in this part's general definitions section, § 238.5.

In its comments on the proposed definition of ''cab,'' APTA recommended FRA remove the proposed statement that the term ''cab'' includes a locomotive cab for the purposes of subpart H. According to APTA, the Tier III trainsets subpart H addresses do not have locomotive cabs. APTA also commented that any analysis for a Tier I alternatively compliant trainset as governed by appendix G cannot include an analysis of the cab of a conventional locomotive because the collision model used for that analysis is insufficient. APTA suggested instead to revise the proposed definition of ''cab'' to mean ''for the purposes of subpart H of this part, a compartment or space in a trainset designed to be occupied by the engineer and contain an operating console from which the engineer exercises control over the trainset.'' When discussed at the May 2017 ETF meeting, APTA expanded on its comment saying that if the definition were to remain as proposed, there would need to be a way to differentiate between when the term ''cab'' applies to a Tier III trainset versus a conventional locomotive cab. APTA stated this is crucial when applying the dynamic collision scenario under § 238.705 because (as discussed more comprehensively below) a Tier III trainset cannot be led by a conventional North American locomotive in its intended service.

FRA recognizes APTA's underlying concern with the proposed definition of ''cab.'' FRA has therefore defined the term in this section of the final rule to better clarify how the term is applied to Tier III equipment, and by extension of appendix G to this part, Tier I alternative equipment. Accordingly, the term ''cab'' means a compartment or space within a trainset that is designed to be occupied by an engineer and contain an operating console for exercising control over the trainset. As the definition is contained in this new section, which applies specifically to subpart H, there is no need to add language to the definition expressly limiting its application.

In addition, as fully discussed below, FRA has included the term ''integrated trainset'' in § 238.705 and is defining that term in this § 238.702. FRA believes that any confusion over which initial velocity applies to a given trainset undergoing evaluation in the dynamic collision scenario in § 238.705 is reconciled with the new term ''integrated trainset.'' The term ''integrated trainset'' is defined as a passenger trainset in which all units of the trainset are designed to operate as an integrated consist to achieve its structural crashworthiness performance. FRA intends the term ''integrated trainset'' to mean that each individual vehicle comprising the trainset is interdependent structurally with each other, specifically with respect to the collision load path and how the collision loads are designed to be resolved.

Trainset Structure

Section 238.703 Quasi-Static Compression Load Requirements

This section contains the quasi-static compression load requirements for Tier III equipment. This section also requires compliance with § 238.705 to demonstrate sufficient occupied volume integrity (OVI). The purpose of applying both requirements is to ensure the integrity of the occupied volume during a collision or other accident. Integrity of the occupied volume is a fundamental requirement of crashworthiness—the primary goal of which is preservation of space to protect occupants during an accident. Additionally, a strong occupied volume serves as the foundation for other crashworthiness features such as CEM components. And although the language of this section references only Tier III trainsets, the requirements of this section may also be applied to Tier I trainsets through the application of appendix G, in the alternative to the requirements of 49 CFR 238.203, Static end strength. Tier I passenger equipment designed to alternative crashworthiness standards may demonstrate an appropriate level of crashworthiness by complying with the quasi-static compression load requirements proposed in § 238.703(b).

FRA received one comment on this section. The commenter, Alstom, stated that the methodology necessary to properly apply the collision load along the collision load path was not included in the proposal, and suggested FRA supply that methodology in some form of compliance manual or document. FRA does agree with Alstom that providing guidance on how to properly apply the requirements of this section would be beneficial to the regulated community. However, to remain technology neutral, FRA did not propose a specific methodology in the rule text. FRA understands there may be different methodologies that are equivalent, and thus putting one in the regulation over another could unintentionally limit the technology employed. FRA intends to address this issue in developing a guidance document, as discussed above.

FRA did not receive any other comments on the requirements in this section as described in the NPRM, 81 FR 88006, 88021–88023, and FRA is adopting this section as proposed. Because this portion of the final rule is identical to the proposed version, the complete analysis provided in the NPRM is not being repeated here.

Section 238.705 Dynamic Collision Scenario

As discussed in the NPRM, this section contains the dynamic collision scenario analysis requirements as the second part of the OVI evaluation of a Tier III passenger trainset, in conjunction with § 238.703. Because PTC technology does not protect against all possible collision scenarios, such as collisions with trespassing highway equipment at grade crossings or with other rolling stock (freight or passenger equipment) during manual operations at 20 mph or below, compliance with this requirement is necessary to preserve the occupied volume, to protect all occupants on the trainset.

As mentioned in the discussion of § 238.703, each vehicle in the trainset needs to demonstrate it meets both the OVI requirements in paragraph (b) of that section and the dynamic collision scenario requirements in paragraph (b) of this section. Further, as provided in § 238.703, and as outlined in appendix G, a Tier I passenger trainset designed to alternative crashworthiness standards may comply with this section instead of the requirements applicable to Tier I passenger trainsets in § 238.203.

In combination with the quasi-static compression load requirements in § 238.703, the purpose of this dynamic collision scenario requirement is to ensure that survivable space for the passengers and crew is preserved in up to moderately severe accident conditions (*i.e.,* conditions comparable to a head-on collision at speeds of 20 to 25 mph, depending on the type of equipment, into a stationary train). This requirement also provides a baseline level of protection for scenarios that may be more severe, but less predictable with respect to loading conditions and historical accident data. Although the dynamic collision scenario is conducted at the trainset level, the requirements described in this section are evaluated at the level of the trainset's individual vehicles so no vehicle in the trainset may exceed the parameters outlined in paragraph (b) as a result of the dynamic collision scenario.

Paragraph (a) outlines the required conditions under which a dynamic collision scenario is performed. Generally, the collision scenario requires a dynamic impact to be simulated between an initially-moving trainset and an initially-standing train. The initially-moving trainset is the trainset undergoing evaluation, either Tier III equipment or, as provided in appendix G, Tier I equipment designed to alternative crashworthiness standards. The initially-standing train is a locomotive-led consist of five conventionally-designed passenger cars. The conventionally-designed passenger cars have a prescribed weight and force-versus-displacement characteristic.[15] The pass/fail criteria for the scenario determine whether there is sufficient preservation of occupied volume for passengers and crew in the trainset undergoing evaluation.

FRA expects the collision scenario simulation to be executed for an impact duration sufficient to capture the most severe portion of the collision event. The actual amount of impact time required to simulate the collision sufficiently will vary based upon the characteristics of the trainset undergoing evaluation. Typically, the collision scenario will be executed until all the equipment, including the initially-standing train and initially-moving trainset, is moving in the same direction at approximately the same velocity. If all the equipment is moving together at approximately the same speed, no further vehicle-to-vehicle impacts will occur, and the simulation will then have been executed for a sufficient duration to capture the most severe decelerations.

There are various types of analyses that may be used to evaluate the collision scenario requirements. These analyses include fully-detailed FE models, lumped-parameter analyses, or a hybrid approach where a combination of detailed FE modeling and lumped-parameter techniques are used within the same simulation. An FEA of the scenario is generally a highly-detailed simulation of the actual trainset geometry. The parts making up the trainset are meshed into a large number of elements, with each element having its own mass, stiffness, and connection properties to the adjacent elements. A lumped parameter analysis represents each car or section of a car within a trainset using a small number of masses and a small number of non-linear springs. At its extreme, each vehicle consists of a single mass and a single spring characteristic. A hybrid approach may utilize an FE mesh to represent some structures (*e.g.,* CEM structures that undergo large deformations) and lumped-parameter representations of other structures (*e.g.,* vehicles far from the impacting interface that experience little deformation). Any of the three types of analyses is capable of developing the information needed to verify a trainset's ability to meet the requirements of the collision scenario. Additionally, because the centerlines of the initially-moving trainset and initially-standing train are aligned with one another during this scenario, a half-symmetric model may be used to represent the colliding vehicles, as appropriate.

FRA received comments from APTA recommending revisions to several paragraphs of this section in the NPRM. In its comments on the NPRM, APTA recommended that FRA replace the references made to ''train'' in paragraphs (a)(1)–(3), (6), and (8), and replace them with the term ''trainset,'' to clarify the application of the collision scenario under paragraph (a) of this section. APTA proposed that the term trainset be defined to mean a passenger train where all units within the trainset are semi-permanently coupled to operate as a single consist. As stated under the discussion of § 238.5, FRA has not adopted APTA's proposal definition of ''trainset.'' However, FRA does agree that reference to a trainset is more appropriate than to a ''train'' in this section. Accordingly, the above-referenced paragraphs of paragraph (a) use the term ''trainset,'' instead of ''train,'' and FRA intends the term ''trainset'' to mean either a Tier I alternative or Tier III trainset, as those terms are defined in § 238.5. However, with reference to the initially-standing train, as FRA envisions it being reflective of a conventional Tier I passenger train, FRA is using the term ''train'' for clarity. Although not specifically requested by APTA, paragraphs (a)(4) and (9) use the term ''trainset'' in conformance with these changes.

In commenting on the NPRM, APTA recommended that paragraph (a)(3) be placed in appendix G to part 238, consistent with its other comments that requirements for conventional locomotive led equipment are not appropriate in subpart H because Tier III equipment will not utilize conventional locomotive power. APTA also suggested that the text adopt APTA's proposed definition of ''trainset'' instead of ''train,'' as proposed. Paragraph (a)(3) of this section, as proposed in the NPRM, stated that if the trainset is intended for use in push-pull service, then both the locomotive-led and cab-car-led configurations would require separate evaluation. This proposal was intended to ensure sufficient OVI for all occupied spaces in the trainset regardless of whether led by a cab car or a conventional locomotive.

FRA's discussion of the use of the term ''conventional locomotive'' in paragraph (a)(6) of this section applies

[15] Appropriate weights and force-versus-displacement characteristics for the conventionally-designed passenger cars can be found in the Technical Criteria and Procedures Report.

here, in response to APTA's concern, as discussed below. In the final rule, this paragraph (a)(3) omits specific references to ''locomotive'' or ''cab car'' and requires that if the initially-moving trainset is intended for use in push-pull service, then, as applicable, each configuration of leading vehicle shall be evaluated separately. By requiring that each lead vehicle be evaluated separately, FRA intends to capture situations where the lead vehicles of a push-pull operation could be two different styles of vehicle that could potentially have different designs and structural characteristics, and thus have different crashworthiness and occupant protection capabilities. This paragraph eliminates any reference to a specific technology and only requires separate evaluation if the lead vehicles are different. FRA recognizes that some push-pull operations do not necessarily require a locomotive-like vehicle on one end with a cab car-like vehicle on the other. But when the two vehicles are different, in design or structural make-up, then the crashworthiness and occupant protection capabilities of each vehicle must be evaluated.

In its comments on this section, Alstom also raised concern about how to implement the force-versus-crush requirements in proposed paragraph (a)(4)(ii) and Table 1 to this section. Proposed paragraph (a)(4)(ii) stated that the rigid locomotive and each passenger coach in the initially-standing train crush in response to applied force as specified in Table 1, which in turn provided the non-linear, force-versus-crush relationships for the passenger cars and locomotive comprising the initially-standing train. In particular, Alstom found it unclear whether the paragraph made it necessary to combine characteristics at ''inter-trailers,'' and, if so, how to do so. Alstom therefore suggested that the force-crush characteristics to be used at each interface between vehicles be included in this paragraph instead of Table 1.

FRA makes clear that the force-crush characteristics described in Table 1 are intended for use as inputs to a lumped-parameter simulation model of a train-to-train collision. The data in Table 1 describe the resulting force when the equipment moves into a rigid fixed barrier. In the initial position, when the crush is 0 inches, the passenger coach is just touching the barrier and the force is also 0 lbf. The length of the coach is reduced as the coach moves towards the barrier and crushes. When the coach has crushed by 3 inches, the force has increased linearly to 80,000 lbf. When the coach has crushed by 6 inches, the force again increases linearly to 250,000 lbf, from 80,000 lbf. For the rigid locomotive, the force is 0 lbf when the crush is 0 inches and the rigid locomotive is just touching the barrier. After 2.5 inches of crush, the force increases linearly to 100,000 lbf. When the rigid locomotive has crushed by 5 inches, the force again increases linearly to 2,500,000 lbf, from 100,000 lbf.

Depending on the details of the software used to implement the lumped-parameter model, the data in Table 1 may need to be re-formatted. Some software may allow the data to be input simply as it is presented in Table 1. Other software may require coach-to-coach force crush characteristics for input. For coach-to-coach crush, the crush distances simply double for the corresponding force. Accordingly, 6 inches of crush between coaches are required to reach 80,000 lbf, and 12 inches of crush are required to reach 2,500,000 lbf. For rigid locomotive-to-coach crush, some calculations are required. At 80,000 lbf between the rigid locomotive and coach, the rigid locomotive has crushed by 2 inches, while the coach has crushed by 3 inches. The rigid locomotive-to-coach crush is then 5 inches when there is 80,000 lbf between the rigid locomotive and coach. At 100,000 lbf between the rigid locomotive and coach, the rigid locomotive has crushed by 2.5 inches and the coach has crushed by 3.35 inches. The rigid locomotive-to-coach crush is 5.85 inches at 100,000 lbf. At 2,500,000 lbf between the rigid locomotive and coach, the rigid locomotive has crushed by 5 inches and the coach has crushed by 6 inches. The rigid locomotive-to-coach crush is 11 inches at 2,500,000 lbf.

Calculations may be necessary to determine the force-crush characteristic between the rigid locomotive described in Table 1 and the new equipment under evaluation. The details of such calculations will likely depend on the software modeling choices. One possibility, of many, is to calculate the force-crush response of the new equipment with a rigid fixed barrier, and use those results in combination with the rigid locomotive data in Table 1. The force-crush characteristic for the rigid locomotive to the new equipment may then be calculated in a manner similar to the force crush characteristic for the rigid locomotive to the coaches.

Most notably, APTA recommended revising paragraph (a)(6), which specifically describes the initial velocities to be assigned to the initially-moving trainset in the dynamic collision scenario. FRA makes clear that, although the collision scenario in paragraph (a)(6) references ''initial velocities'' for the scenario, FRA expects that the actual velocity at the colliding interface be the same as the initial velocity, as generally models do not account for loss of velocity. However, if a model includes loss of velocity due to friction, or other velocity-reducing forces, FRA would expect the initial velocity to be increased so that the collision velocity remains either 20 mph or 25 mph, depending on the equipment undergoing evaluation. As proposed in the NPRM, if the initially-moving trainset were led by a cab car or an MU locomotive, its initial velocity would be 20 mph; if the initially-moving trainset were led by a conventional locomotive, its initial velocity would be 25 mph. These speeds were chosen based upon estimates of the upper limit of the ability of conventionally-designed Tier I equipment to maintain its occupied volume in a similar collision scenario.

APTA commented that, although it is probable for a Tier I alternative trainset, it is not possible for a Tier III trainset to be led by a conventional North American locomotive. APTA stated that a Tier III trainset could never meet its performance capabilities with a conventional locomotive on the leading and trailing ends, because the end units must be low-profile, aerodynamic designs that are an integral part of the trainset design. APTA therefore suggested that the portion of the rule text involving an initially-moving consist led by a conventional locomotive be placed in appendix G to this part and not contained in this section.

Alstom also provided comments on paragraph (a)(6) of this section. Specifically, Alstom sought clarification of the application of the 20-mph and 25-mph initial velocities. Alstom did not believe having two initial velocities makes sense and suggested there should instead be only one initial velocity applicable to all equipment—an initial velocity for all Tier III trainsets.

FRA carefully considered both APTA's and Alstom's comments on this paragraph. FRA recognizes the importance of ensuring that the intent of the section's application is clearly understood so that equipment designed to the Tier III crashworthiness and occupant protection requirements, or the Tier I alternative requirements, properly preserves the occupied volume in the event of a collision. As discussed above, the collision scenario speeds were chosen based upon estimates of the upper limit of the ability of conventionally-designed Tier I equipment to maintain its occupied volume in a similar collision scenario. FRA did not intend inclusion of two

collision scenario speeds to create ambiguity but rather to clarify and refine the application of this paragraph depending on the type of equipment used. Nonetheless, FRA recognizes that use of the term ''conventional locomotive'' for purposes of applying the dynamic collision scenario requirements could cause confusion. FRA did not intend for the reference to a ''conventional locomotive'' to necessarily mean a conventional North American locomotive. Instead, FRA intended the reference to refer more generally to the use of a rigid locomotive, especially a surrogate model of a rigid locomotive when the leading unit is unknown. This is why FRA included in the proposed rule text a rigid locomotive model, as described and depicted in appendix H to this part, Rigid locomotive design computer model input data and geometrical depiction. Accordingly, FRA has holistically revised this section from that proposed in the NPRM to remove the term ''conventional locomotive'' and replace it with the term ''rigid locomotive,'' referencing the rigid locomotive model in appendix H.

FRA notes that it also considered drafting the regulatory text so that the 20-mph initial velocity would apply to a trainset led by a vehicle designed to be occupied by passengers, and the 25-mph initial velocity would apply to a trainset led by equipment not designed to be occupied by passengers. When this issue was discussed at the May 2017 ETF meeting, the ETF members rejected this approach. Simply referencing a locomotive not designed to be occupied by passengers instead of a conventional locomotive did not fully resolve the issue, because of concern that a Tier III trainset may not be powered by a stand-alone power unit but rather through an integrated system in which powered axles are distributed throughout the trainset. Additionally, a question arose whether a control cab in the lead unit of such an integrated and powered trainset design made that lead unit an MU, further clouding which initial velocity would apply. Moreover, to the extent passengers do not occupy the lead unit in such a trainset, there would be a large mass in front of passenger-occupied units that allows for more absorption of energy not being transferred to the passenger-occupied units, and the ETF raised concern that the lead unit in such a trainset not be subjected to more stringent requirements.

In discussing how best to clarify the application of the requirements of this paragraph, ETF industry representatives mentioned that the requirements, when developed for the Technical Criteria and Procedures Report, were intended to apply to integrated trainsets, not trainsets led by conventional North American locomotives. Consistent with the comments APTA and Alstom submitted, ETF industry representatives suggested applying the 20-mph initial velocity to Tier III trainsets in this section, and applying the 25-mph initial velocity to Tier I alternative trainsets in appendix G to this part. ETF labor representatives noted the original consensus product of the ETF and cautioned against re-drafting consensus language. After a healthy discussion and to remain technology neutral, FRA proposed to the ETF the concept of using the term ''integrated trainset'' for determining which initial velocity applies. If the design of the trainset was integrated from a structural and crashworthiness perspective, with all vehicles inclusive of the leading unit designed to work together in a collision scenario, then the 20-mph initial velocity would apply. For all other configurations not considered ''integrated,'' regardless of the equipment's tier and what type of unit leads the trainset, the 25-mph initial velocity would apply. Such an approach would take into account instances when the lead unit of a Tier III trainset and its passenger coaches would be manufactured by different companies. Further, because properly testing the crashworthiness and occupant protection capabilities of the passenger coaches must involve some known characteristics of the vehicle leading the trainset, this section would consider such a trainset a non-integrated trainset led by a surrogate for the lead unit, and reflect that the collision load paths of the lead unit and the coach cars are not structurally interdependent.

Accordingly, in the final rule, FRA has not adopted the proposed references to cab cars, or MU or conventional locomotives. Rather, paragraph (a)(6) of this section requires the initially-moving trainset to have an initial velocity of 20 mph if it is an integrated trainset, as that term is now defined under § 238.702, or an initial velocity of 25 mph when the lead vehicle is not part of the integrated design. By using the term ''integrated trainset,'' FRA intends to remain technology-neutral and not restrict the type of equipment that could potentially lead a Tier III trainset. As long as the entire trainset is designed and built as an integrated trainset, the 20-mph initial velocity applies.

FRA also received comments from APTA concerning paragraph (b) of this section, which contains the crashworthiness and occupant protection performance requirements the individual vehicles in the initially-moving trainset involved in the dynamic collision scenario must meet as described in paragraph (a). Specifically, FRA proposed in paragraph (b)(2) that if the option to use GM/RT2100 is exercised to demonstrate compliance with any of the requirements in §§ 238.733, 238.735, 238.737, or 238.743, then the average longitudinal deceleration of the center of gravity (CG) of each vehicle during the dynamic collision scenario shall not exceed 5g in any 100-millisecond (ms) time period. FRA explained that a plot of the 100-ms average longitudinal deceleration versus time, in which the curve never exceeds 5g, would suffice to demonstrate compliance with paragraph (b)(2). APTA, in its comment, noted that proposed paragraph differed slightly from the consensus agreement. However, APTA expressed its agreement with the proposal if FRA intends the rule to allow the use of a moving window of a 5g average deceleration within 100 ms.

FRA makes clear that the differences between the consensus rule text and the proposed rule text were merely editorial in nature and in no way changed the substantive intent that the average longitudinal deceleration of the CG of each vehicle of the initially-moving trainset during the dynamic collision scenario not exceed 5g in any 100-ms time period. Additionally, FRA disagrees with APTA's characterization of the intent of this section. The average deceleration in any 100-ms period was never intended to be comprised of the most favorable data points during the time period, *e.g.,* selecting only those decelerations that are at or below 5g, to demonstrate compliance. It has always been FRA's intent that a representative data set be used to calculate the average deceleration. However, because FRA recognizes the possibility that this intent may be overlooked, or otherwise not followed, FRA is including text in paragraph (b)(2) specifying that the maximum interval between the data points averaged in the 100-ms time period shall be no greater than 1 ms. This means that each deceleration experienced during each millisecond of the 100-ms period must now be used to calculate the average deceleration under paragraph (b)(2) of this section. FRA believes this provision will help assure that the average taken during the 100-ms time period is based on a sufficient data set, so that there is a high degree of confidence and accuracy supporting the calculated average deceleration.

FRA has otherwise adopted this section as proposed in the NPRM, and the complete analysis provided in the NPRM is not being repeated here.

Section 238.707 Override Protection

This section contains the requirements for analyzing the ability of a Tier III passenger trainset to resist vertical climbing or override at its collision interface locations during a dynamic collision scenario. This section examines the vertical displacement behavior of colliding equipment under an ideal impact scenario where an initially-moving Tier III trainset and an initially-standing train are aligned. This section also prescribes an impact scenario where the interface of the colliding equipment is translated both laterally and vertically by 3 inches to ensure that override is resisted during an impact when the two trains are not perfectly aligned. Evaluating the colliding equipment's ability to resist override in an offset impact condition helps to demonstrate that the override features are robust. As proposed, Tier III passenger trainsets must comply with both paragraphs (a) and (b) of this section.

FRA received comments from Alstom on this section on proposed paragraphs (a)(1)(ii) and (b)(1)(ii). Alstom stated that the direction of the vertical perturbation required in each paragraph was not defined (*i.e.,* whether the perturbation is upwards or downwards). Alstom recommended that the rule specify which direction the initially-moving trainset is to be perturbed, to remove any confusion on how the dynamic collision scenario under § 238.705(a) is applied to properly evaluate the equipment's resistance to override.

FRA agrees with Alstom's comment, and for the reasons discussed below, paragraph (a)(1) in the final rule contains three sets of initial conditions for analyzing the ability of the evaluated trainset to resist vertical climbing or override during a dynamic collision scenario. Paragraph (a)(1) also states these conditions must be applied using the dynamic collision scenario in § 238.705(a). The criteria for evaluating the dynamic collision scenario for each set of initial conditions are provided in paragraph (a)(2), and remain unchanged from the NPRM. Because the same model may be used both to demonstrate compliance with the requirements of § 238.705 and the requirements of paragraphs (a) and (b) of this section, the model must be validated with test data in such a way as to provide confidence in the validity of the results of the collision analyses. In this regard, if the components that experience large deflection or permanent deformation in the analysis described in § 238.705 also experience large deflection or permanent deformation in the analysis described in paragraph (a)(2) of this section, then the same test results may be used to validate the model. If the performance of the components that undergo large deformation in the analysis described in paragraph (a)(2) of this section is not validated with test data as part of the validation of the model used in § 238.705, then additional validation testing must be performed to validate the model being used to demonstrate performance under paragraph (a)(2).

Paragraph (a)(1)(i) describes the first condition to be used in the collision simulation to demonstrate anti-climbing performance, and remains unchanged from the NPRM. This paragraph still provides that all vehicles in both the initially-moving trainset and the initially-standing train consists must be positioned at their nominal running heights with the centerlines of the initially-moving trainset and initially-standing train aligned. Because the centerlines of the colliding vehicles are aligned with one another, a longitudinally half-symmetric model may be used to simulate this collision scenario, as appropriate. FRA intends for this initial condition to represent an ideal collision situation where the colliding vehicles are initially aligned with one another.

As proposed, paragraph (a)(1)(ii) described the second condition to be used in the collision simulation as a 3-inch lateral and 3-inch vertical offset of the interface of the colliding equipment, without defining the direction of the perturbance. It is here where Alstom's comment was focused. FRA notes that implicit in the proposed regulatory text for this paragraph was an assumption that, to demonstrate compliance with this section, a railroad or manufacturer would choose the more unfavorable arrangement (upwards or downwards perturbance) with respect to override (the arrangement most likely to lead to override) to be evaluated. However, FRA recognizes that this assumption was not made clear. Therefore, in the final rule, FRA has provided more detail in paragraph (a)(1)(ii) and included new paragraph (a)(1)(iii). Although FRA is being more prescriptive with respect to the requirements of this section to remove ambiguity on its application, FRA still expects that when a scenario arises where there are multiple arrangements that can be evaluated, the most severe scenario (the scenario most likely to lead to override) will be evaluated and the results used to determine whether compliance with the requirements of this section has been achieved.

Accordingly, paragraph (a)(1)(ii) specifies that the initially-moving trainset must be perturbed 3-inches laterally and 3-inches vertically upwards relative to the initially-standing train. Further, paragraph (a)(1)(iii) requires that the initially-moving trainset must be perturbed 3-inches laterally and 3-inches vertically downwards relative to the initially-standing train. The lateral and vertical offsets still must be applied simultaneously in the same simulation. Evaluating the equipment offset in this manner will demonstrate that the anti-climb features are of a robust design, capable of preventing climbing when the colliding vehicles are not perfectly aligned. Because these simulations require a lateral offset between the initially-standing train and initially-moving trainset, a symmetric boundary condition may not be employed (*i.e.,* the full width of each consist must be modeled).

Paragraph (a)(2) remains unchanged from the NPRM, except for use of the term ''trainset,'' instead of ''train,'' to remain consistent with use of the term in other sections of this final rule. This paragraph explains the pass/fail criteria that must be successfully met to demonstrate a trainset possesses adequate anti-climb features for its colliding interface. The criteria must be met for each set of initial conditions in paragraphs (a)(1)(i)–(iii) for demonstrating appropriate resistance to override between colliding equipment.

Paragraph (b) contains the evaluation methodology for demonstrating the appropriate level of override protection for connected equipment in a Tier III trainset. This paragraph requires examination of the vertical displacement behavior of coupled equipment under an ideal impact scenario where the vehicles within the initially-moving trainset are aligned. It also prescribes an impact scenario where the first coupled interface of the initially-moving trainset is translated both laterally and vertically by 2 inches. Evaluating the connected equipment's ability to resist override in an offset impact condition is necessary to demonstrate the override features are robust and can resist override during an impact where the coupled vehicles are not perfectly aligned.

Paragraph (b)(1) explains the conditions for analyzing the ability of connected equipment to resist vertical climbing or override at the coupled interfaces during a dynamic collision

scenario, using the scenario described in § 238.705(a). Like paragraph (a) of this section, each set of conditions in paragraphs (b)(1)(i)–(iii) must be evaluated independently. Criteria for evaluating the dynamic collision scenario for each set of conditions are in paragraph (b)(2). As noted in the discussion of paragraph (a), because the same model may be used to demonstrate compliance with the requirements of § 238.705 and the requirements of this section, the model must be validated with test data in a way that provides confidence in the validity of the results of the collision analyses. The discussion of model validation in paragraph (a) applies equally to model validation for purposes of paragraph (b).

Paragraph (b)(1)(i) describes the first condition to be used for collision simulation to demonstrate override protection for connected equipment, and remains unchanged from the NPRM. This paragraph provides that all vehicles in both the initially-moving trainset and the initially-standing train consists must be positioned at their nominal running heights, with the centerlines of the initially-moving trainset and initially-standing train aligned. Because the centerlines of the colliding vehicles will be aligned with one another, a longitudinally half-symmetric model may be used to simulate this collision scenario, as appropriate. This initial condition is meant to represent an ideal collision situation where the colliding vehicles are initially aligned with one another.

As proposed, paragraph (b)(1)(ii) described the second condition to be used in the collision simulation as a 2-inch lateral and 2-inch vertical offset of the first connected interface between vehicles in the initially-moving train. As discussed above, Alstom raised concern that the proposed paragraph did not define the direction of the vertical offset. Accordingly, FRA is employing the same approach here as under paragraph (a)(1)(ii) to clarify the direction of the vertical offset and is also including a new paragraph (b)(1)(iii).

In the final rule, paragraph (b)(1)(ii) specifies that the first connected vehicle behind the lead unit of the initially-moving trainset must be perturbed 2-inches laterally and 2-inches vertically upwards, relative to the adjacent vehicle, at the first connected interface. Further, paragraph (b)(1)(iii) requires that the first connected vehicle behind the lead unit of the initially-moving trainset must be perturbed 2-inches laterally and 2-inches vertically downwards, relative to the adjacent vehicle, at the first connected interface. The lateral and vertical offsets must still be applied simultaneously in the same simulation. Evaluating the equipment offset in this manner will demonstrate that the anti-climb features are of a robust design, capable of preventing climbing when the vehicles in the initially-moving trainset are not perfectly aligned. Because these simulations require a lateral offset between the vehicles of the initially-moving consist, a symmetric boundary condition may not be used (*i.e.,* the full width of each consist must be modeled).

Paragraph (b)(2) remains unchanged from the NPRM, except for use of the term ''trainset,'' instead of ''train,'' to remain consistent with use of the term in other sections of this final rule. This paragraph sets out the pass/fail criteria that must be successfully met to demonstrate a Tier III trainset possesses adequate anti-climb features to protect the vehicles connected in the trainset from overriding each other. The criteria must be met for each set of initial conditions provided in paragraphs (b)(1)(i)–(iii) to demonstrate appropriate resistance to override between connected equipment.

Under appendix G to this part, a Tier I alternative passenger trainset may demonstrate an appropriate level of override protection by complying with the requirements of this section instead of the requirements applicable to Tier I passenger train in § 238.205, Anti-climbing mechanism, and § 238.207, Link between coupling mechanism and car body, as proposed. In general, the requirements in this section were developed as an alternative to demonstrating anti-climbing capabilities in § 238.205 and the capability of the link between the coupling mechanism and carbody to resist the loads in current § 238.207. While compliance with both §§ 238.205 and 238.207 requires meeting a set of quasi-static, vertical load cases, the requirements in this section were developed as a dynamic performance standard.

Section 238.709 Fluid Entry Inhibition

This section contains the requirements for fluid entry inhibition for the skin covering the forward-facing end of a Tier III trainset. FRA received one comment on this section from APTA which agreed with the language of this section, noting that compliance with this section can be demonstrated during a design review of the equipment. As this portion of the final rule is identical to the proposed version, the analysis provided in the NPRM is not being repeated here, see 81 FR 88006, 88026, and FRA is adopting this section as proposed.

Section 238.711 End Structure Integrity of Cab End

This section contains requirements to ensure the structure of cab ends of Tier III trainsets (and Tier I trainsets designed to alternative crashworthiness standards under appendix G) provides a minimum level of protection for the engineer and other cab occupants, equivalent to the collision post and corner post requirements for Tier I equipment in subpart C. FRA did not receive any comments on these requirements and FRA is adopting this section as proposed. Accordingly, as this portion of the final rule is identical to the proposed version, the analysis provided in the NPRM is not being repeated here, see 81 FR 88006, 88027.

Section 238.713 End Structure Integrity of Non-Cab End

This section contains requirements to ensure the structure of the non-cab ends of Tier III trainsets (and Tier I trainsets designed to alternative crashworthiness standards under appendix G) provides a minimum level of protection for occupants equivalent to that required for Tier I equipment in subpart C. These requirements help ensure the integrity of the components that make up any non-cab end of a passenger trainset unit. FRA did not receive any comments on these requirements and FRA is adopting this section as proposed. Accordingly, as this portion of the final rule is identical to the proposed version, the analysis provided in the NPRM is not being repeated here, see 81 FR 88006, 88027.

Section 238.715 Roof and Side Structure Integrity

To demonstrate sufficient roof and side structure integrity, Tier III trainsets (and Tier I trainsets designed to alternative crashworthiness standards under appendix G) must comply with the requirements in § 238.215, ''Rollover strength,'' and § 238.217, ''Side structure.'' These Tier I requirements in §§ 238.215 and 238.217 are thereby broadly applicable to both new trainset classifications in this final rule. FRA did not receive any comments on this section and FRA is adopting it as proposed. Accordingly, as this portion of the final rule is identical to the proposed version, the analysis provided in the NPRM is not being repeated here, see 81 FR 88006, 88029.

Section 238.717 Truck-to-Carbody Attachment

This section contains requirements to demonstrate the integrity of truck-to-carbody attachments on a Tier III trainset (or a Tier I trainset designed to

alternative crashworthiness standards under appendix G) during a dynamic impact. In commenting on the NPRM, Alstom recommended FRA clarify that the performance metric in paragraph (c) of this section is the ultimate strength of the truck materials. Paragraph (c) provides an alternative to demonstrating compliance with the quasi-static load requirements applied on the mass of the truck at its CG in paragraph (b)(3) of this section. Instead, paragraph (c) requires demonstrating the truck remains attached after a dynamic impact under the nominal conditions in the dynamic collision scenario described in § 238.705(a). Because paragraph (b)(3) limits demonstrating compliance to a truck and carbody meeting deceleration requirements specified in paragraphs (b)(3)(i) and (ii), respectively, paragraph (c) may alternatively be used to demonstrate truck-to-carbody attachment when the requirements in paragraph (b)(3) are exceeded. To comply with paragraph (c), it must be demonstrated that the truck undergoing evaluation has remained attached to the carbody after the trainset has been subjected to a dynamic collision scenario as described in § 238.705(a). FRA recognizes that the collision scenario in § 238.705(a) results in deformation of the carbody structure, and allowance for such deformation is consistent with an evaluation of the truck-to-carbody attachment that is based on ultimate strength, as FRA intended for paragraph (c). Accordingly, in response to Alstom's comment, FRA makes clear that the required performance metric in paragraph (c) is based on ultimate strength.

As a separate comment, Alstom requested that FRA make clear this section ''supersedes'' the requirements contained in § 229.141(a)(5) of this chapter, which applies to MU locomotives built new after April 1, 1956, that are operated in trains having a total empty weight of 600,000 pounds or more. Section 229.141(a)(5) of this chapter provides that the strength of the means of locking the truck to the body shall be at least the equivalent of an ultimate shear value of 250,000 pounds. However, FRA notes that the required truck attachment strength in § 238.717 is intended to be equivalent to an ultimate shear value of 250,000 pounds. Consequently, the requirements of § 238.717 are harmonious with the requirements of § 229.141(a)(5) of this chapter. Nonetheless, in response to Alstom's comment, FRA makes clear that the requirements of § 229.141(a)(5) of this chapter are inapplicable to Tier III and Tier I alternative trainsets subject to § 238.717.

FRA did not receive any other comments on this section and FRA is adopting it as proposed. As this portion of the final rule is identical to the proposed version, the analysis provided in the NPRM is not being repeated here, see 81 FR 88006, 88029–88030.

Glazing

Section 238.721 Glazing

This section contains the requirements for exterior glazing (*i.e.,* side- and end-facing exterior windows and windshields) to be installed on Tier III trainsets. APTA and TCRR both commented on this section as proposed in the NPRM. The comments focused on three discrete areas: Conduct of a comprehensive analysis, ballistic impact resistance requirements, and certification of the glazing material. Having considered the comments received, this section of the final rule reflects several changes from the NPRM, as explained below. Otherwise, FRA has adopted the requirements as proposed in the NPRM, and FRA is not repeating the analysis in the NPRM supporting and explaining those provisions remaining the same, see 81 FR 88006, 88030–88032.

Comprehensive Analysis

Both APTA and TCRR recommended deleting as unnecessary the requirement in proposed paragraph (a) of this section to conduct a comprehensive analysis identifying and addressing glazing safety issues associated with operating in a Tier III environment as part of the railroad's Safe Operation Plan for Tier III Passenger Equipment. APTA stated that specific requirements for Tier III glazing were adequately defined in the other paragraphs of this section, and were based on the operating environment for Tier I passenger equipment and the protected ROW required by FRA regulations under 49 CFR parts 213 and 236 for the dedicated high-speed portions. APTA also commented that compliance with the other paragraphs of this section will permit Tier III trainsets to be interoperable on the national rail network. Similarly, TCRR believed that compliance with the performance requirements contained in the other paragraphs proposed in this section should be the only regulatory requirements necessary to demonstrate suitability for Tier III trainset glazing and will assure interoperability throughout the national rail network. TCRR added that even if proposed paragraph (a) was intended to ensure that the ROW is adequately protected against potential hazards to the glazing there is no need to specify such a requirement here as other provisions of FRA's regulations adequately cover the topic, citing FRA's requirement for a ROW barrier plan, under 49 CFR 213.361, and the HSR–125 plan, under 49 CFR 236.1007.

In the final rule, FRA has not adopted the requirement proposed in paragraph (a) for railroads to conduct a comprehensive analysis of their systems to identify and address glazing safety issues their systems present for Tier III operations. Moreover, as explained further in the discussion under Discussion of Comments and Conclusions, section IV, neither this section nor any section in the final rule text refers to analyses required under a Tier III Safe Operation Plan. However, this section does require railroads to properly support and document glazing safety determinations, notably for the ballistic-resistance properties of the glazing material and for use of alternative requirements in a non-cab, side-facing window intended to be a breakable emergency window exit, for which specific FRA approval is required. FRA, based on input provided by the ETF, is working towards developing procedures and processes to provide such FRA approval, as discussed under Discussion of Comments and Conclusions, section IV, above. FRA will of course also work with any proposed Tier III operation to ensure that the requirements of this section are properly implemented.

Separately, because FRA has not adopted proposed paragraph (a), the paragraph ordering in this final rule begins with proposed paragraph (b), which is designated paragraph (a). Subsequent paragraphs proposed in the NPRM are designated accordingly in conformance, with the exception of the certification requirements in paragraph (e) in this final rule, discussed below.

Ballistic Penetration Resistance Requirements

In its comments on this section, APTA disagreed with FRA's proposal under paragraph (b)(5) of the NPRM that ballistic penetration resistance be sufficient to protect cab occupants from the risks and hazards identified by the railroad as part of its Tier III Safe Operation Plan, at a minimum meeting the protection requirements in appendix A to part 223 of this chapter. Instead, APTA suggested the regulation should require compliance with the ballistic impact protection requirement in appendix A to part 223, specifically in paragraphs (b)(10)(i) or (11)(i) of that

appendix, as appropriate. APTA stated that due to the interoperability requirements for Tier III equipment, the ballistic impact requirements must be standardized rather than vary for each railroad. APTA also stated that FRA has previously indicated the current 22 caliber bullet requirement in appendix A to part 223 has proven effective, and therefore APTA recommended retaining the current requirement for Tier III equipment. Further, in line with its comments on proposed paragraph (a), and noting that the existing requirement has shown through a long history to be adequate for conventional equipment, APTA suggested that no reference to a Tier III Safe Operation Plan is necessary. In addition, APTA expressed concern that changing the ballistic requirement has implications not just for Tier III equipment but for everything that is currently operating in North America and needs to be evaluated in another forum that involves all affected stakeholders.

In its comments, TCRR agreed with APTA and stated it did not see the merits of requiring each railroad to perform a risk assessment to form the basis for any performance requirements for glazing as suggested in proposed § 238.721(b)(5). Instead, TCRR recommended that the regulation include specific ballistic impact requirements that are applicable to glazing on all Tier III trainsets, to assure compatibility and interoperability of Tier III trainsets over the general railroad network. Additionally, TCRR stated that the current 22 caliber bullet requirement should apply to both end-facing and side-face exterior glazing in the cab, as well as in non-cab areas, to assure that both the passengers and crew in a Tier III trainset are afforded the same protection.

FRA notes that ballistic protection for cab glazing was discussed in detail during the RSAC glazing task group meetings, as stated in the NPRM. In particular, during those meetings, labor representatives asserted that ballistic protection from a larger diameter projectile, differing from the size required for Type I glazing by part 223, would enhance the overall safety of the cab occupants. Much discussion was focused on this point, but a review of the available information on the impact characteristics of reasonable ballistic scenarios (projectile size and terminal velocity), and a review of the statistics related to glazing failure due to ballistic impact, proved inconclusive. This is one area where the task group could not agree on a consensus approach. Therefore, the decision on ballistic requirements for cab glazing was referred to FRA.

At this time, FRA does not have sufficient evidence to suggest a particular risk or hazard exists facing all potential Tier III systems to warrant a change from current ballistic requirements in part 223. However, even without such a risk or hazard facing all Tier III systems in common, the circumstances of a specific Tier III operation may warrant additional consideration and protection for that operation. To be consistent with the approach to Tier III safety in this rule, railroad safety elements subject to elements present within a specific Tier III operation need to be addressed in a manner appropriate to that operation, reflecting the level of service, operating environment, operational conditions, etc. Accordingly, while the ballistic penetration resistance requirement in paragraphs (b)(10)(i) and (11)(i) of appendix A to part 223 remains the minimum requirement in this final rule—namely, protection from a 22 caliber long rifle lead bullet of 40 grains in weight impacting at a minimum velocity of 960 feet per second, this final rule allows for the use of a ballistic penetration resistance standard that provides greater protection. Nor would use of a more stringent standard necessarily affect equipment interoperability any more than in any situation where a particular operation uses a standard more stringent than the minimum standard specified in the regulation. Consequently, even though FRA has not adopted the reference to a Tier III Safe Operation Plan in proposed paragraph (b)(5), a Tier III operation is in no way restricted from protecting against only a 22 caliber long-rifle bullet if circumstances known to the railroad warrant additional protection—whether for end-facing glazing in paragraph (a)(5) of this final rule or for side-face glazing in paragraph (b)(2) of this final rule (proposed paragraph (c)(2)).

FRA has continued to examine the appropriateness of the ballistic impact requirement with the ETF, but no consensus within the ETF was reached on this topic. FRA has also engaged in additional research. At the behest of ETF industry members, FRA has subjected representative samples of forward- and side-facing glazing to 22 caliber long rifle and 9 mm ballistic impact tests. The use of a 9 mm bullet for ballistic impact testing reflects the alternative ballistic penetration resistance requirement in 49 CFR 238.421(c)(3)(i) for Tier II equipment ordered prior to May 12, 1999, which FRA believes provides an equivalent level of ballistic protection. However, the results of the testing were not sufficient to confirm whether use of the different caliber bullets results in a different level of test severity or whether the tests are indeed equivalent.

Glazing Certification

Commenters APTA and TCRR also raised concern over the NPRM's approach to the certification of glazing material in proposed § 238.721(b)(6). As a threshold matter, APTA requested that the rule make clear the glazing manufacturer is responsible for certification of each type of glazing material supplied. APTA then stated that the rule, in turn, require testing to be done either by an independent laboratory or the manufacturer with allowance for FRA to witness the testing. Similarly, TCRR believed that the proposal would create unnecessary confusion regarding glazing certification and instead recommended FRA continue with the current approach to glazing certification in part 223. TCRR stated that the current requirements under appendix A to part 223 have worked very well and provide the railroads and carbuilders assurance that all glazing materials they receive are produced from a lot that has been properly tested. TCRR cautioned that before taking a new approach to glazing certification, discussions are needed involving the glazing manufacturers and possible testing agencies to better understand both how any proposed changes would be addressed and the practical realities and consequences of the proposed changes.

FRA recognizes that the proposed regulatory language created confusion regarding who is ultimately responsible for certifying that the glazing material is compliant with FRA's requirements. As such, the final rule text makes clear that the glazing manufacturer is ultimately responsible for this certification. In the NPRM, FRA had intended to convey that the glazing manufacturer can certify the glazing material based on tests performed by an independent third party (*e.g.,* a laboratory, facility, or underwriter), or tests performed by the glazing manufacturer itself. FRA did not intend to imply that another party was ultimately responsible for certifying the glazing materials. Further, for clarity, the glazing certification requirements are contained in their own paragraph (paragraph (e)) in this section of the final rule, rather than combined with other glazing requirements. These glazing certification requirements apply to all glazing material used on Tier III trainsets.

Demonstrating Alternative Safety for Breakable, Emergency Window Exits

Finally, consistent with APTA's comments concerning the NPRM's proposal for a Tier III Safe Operation Plan, APTA commented that proposed paragraph (d)(2)'s alternative requirements for non-cab, side-facing exterior window glazing should not reference a Tier III Safe Operation Plan. APTA stated that during the design review process information would be available that is necessary to demonstrate an equivalent level of glazing safety for a side-facing exterior window intended to be breakable and serve as an emergency window exit, and that its proposal for a new § 238.110 would specifically reference this design review requirement to be included in the pre-revenue qualification plan.

As discussed above, this § 238.721 does require railroads to properly support and document glazing safety determinations. Specifically, paragraph (c)(2) of this section requires such support and documentation for use of alternative glazing requirements in a non-cab, side-facing exterior window intended to be a breakable emergency window exit. FRA approval is also required. Nonetheless, as noted above and discussed under proposed subpart J in the Discussion of Comments and Conclusions, section IV, FRA, based on input provided by the ETF, is working towards developing procedures and processes to provide such FRA approval. As always, FRA will work with any proposed Tier III operation to ensure that the requirements of this section are properly implemented.

Brake System

Section 238.731 Brake System

This section introduces brake system requirements for Tier III passenger trainsets. As articulated in the NPRM, development of these requirements was identified as one of the goals for this first Tier III rulemaking to facilitate planned equipment acquisitions. These requirements represent a balance between maintaining compatibility with existing Tier I equipment and the adoption of service-proven techniques to protect against potential risks encountered with high-speed operations. A concerted effort was made to develop technology-neutral requirements, and the NPRM identified various requirements to be determined by a railroad and included in the railroad's Tier III Safe Operation Plan or ITM Plan.

In response to the comments received, FRA is making changes to this section from the NPRM's proposal, as explained below. Additionally, FRA is making a minor editorial change to reference an ITM ''program'' rather than ITM ''plan.'' Otherwise, FRA has adopted the requirements as proposed in the NPRM, and FRA is not repeating the analysis in the NPRM supporting and explaining those provisions remaining the same, see 81 FR 88006, 88032–88034.

In its comment on this section, APTA recommended that the determinations identified in the NPRM to be included in a Tier III Safe Operation Plan be left to the railroad to address at various stages of equipment design reviews. APTA offered in support of this position that certain determinations to be included in a Tier III Safe Operation Plan are already required under other FRA regulations. As discussed earlier, the requirements of this final rule do not reference a Tier III Safe Operation Plan, and this section contains no such references as proposed in the NPRM. However, this section does provide for FRA approval of various determinations made by the railroad, consistent with FRA's closer oversight of high-speed train operations.

Accordingly, paragraph (b) requires the railroad to define the worst-case adhesion conditions under which each Tier III trainset's brake system must stop the passenger trainset from its maximum operating speed within the prevailing signal spacing, as approved by FRA. The paragraph is intended to ensure that the railroad formally establish the worst case-adhesion conditions for use in procuring individual trainsets. Similarly, paragraph (c)(2) requires the railroad to specify the locations onboard its Tier III trainsets where a crewmember can initiate an irretrievable emergency brake application, as approved by FRA.

FRA approval of railroad determinations is required in several provisions under paragraph (d). Paragraph (d)(1) requires the railroad to identify the locations onboard its Tier III trainsets where a mechanism to initiate the passenger brake alarm is installed. Paragraph (d)(4) requires the railroad to define the timeframe in which engineers must acknowledge a passenger brake alarm after the trainsets have safely cleared the boarding platform, for the engineer to retain full control of the trainset, and to define the method used to confirm that the trainsets did in fact safely clear the boarding platform. In addition, paragraph (d)(6) requires the railroad to specify the procedures for engineers to retrieve full service brake application if the timeframe to acknowledge a passenger brake alarm has passed and a brake application has been automatically initiated.

FRA approval of railroad determinations is also required under paragraph (e), which addresses how trainsets without fully functional electric braking are to be safely operated, particularly to ensure thermal-related brake system damage does not occur. Paragraph (e)(1) requires that the railroad specify the allowable stopping distance not to be exceeded in the event of a power loss or failure of the dynamic or regenerative brake. FRA expects the railroad to provide a means for automatically reducing the maximum allowable train speed, based on feedback from the on-board monitoring and diagnostic system specified in § 238.731(n), so the trainset can safely stop using friction braking alone within the allowable stopping distance. Additionally, paragraph (e)(2) requires the railroad to define the operating conditions under which the available friction braking effort alone can safely stop the trainset. For discussion of paragraph (e)(4), please see below.

FRA approval of railroad determinations is required under paragraph (f)'s main reservoir system requirements. Paragraph (f)(1) requires that main reservoirs be designed and tested using a recognized industry standard specified by the railroad and approved by FRA. This paragraph also provides that the railroad shall define the working pressure and rated temperature for main reservoirs in accordance with the designated standard, if different from the pressure and temperature otherwise specified in this paragraph. Further, paragraph (f)(2) requires the railroad to identify a recognized industry standard governing the drilling of steel main reservoirs.

FRA approval is required under paragraph (j)'s brake application/release requirements. Specifically, paragraph (j)(2) requires that the railroad establish the minimum brake cylinder pressure necessary to adjust from minimum service to full service brake application for proper train operation.

FRA approval is required under paragraph (m)'s slide protection and alarm requirements. Paragraph (m)(3) requires the railroad to specify the operational restrictions that apply when the wheel slide protection system fails to function as intended within pre-established, allowable parameters.

As noted above, the railroad determinations specified under paragraphs (b), (c)(2), (d)(1), (d)(4), (d)(6), (e)(1)–(2), (f)(1)–(2), (j)(2), and (m)(3) do not reference a Tier III Safe Operation Plan but do require FRA approval. However, as discussed under Discussion of Comments and Conclusions, section IV, above, FRA

approval oversight was a major tenet of the proposed Tier III Safe Operation Plan requirement, and those requirements identified for inclusion in the Tier III Safe Operation Plan were selected to allow FRA to have some specific approval oversight of the railroad's determinations. Accordingly, those plan elements the NPRM identified in this section as needing specific FRA approval do require FRA approval in this final rule. Nonetheless, FRA will work with any proposed Tier III operation to ensure that the requirements of this section are properly implemented.

FRA notes that proposed paragraph (l), Leakage, did refer to the Tier III Safe Operation Plan. Paragraph (l) of the final rule contains no such reference. Specifically, the Air Consumption Analysis required under this paragraph shall be developed as part of the railroad's ITM program.

Based on APTA's comments, FRA is taking a somewhat different approach regarding the proposed reference in paragraph (n) to a Tier III Safe Operation Plan. Paragraph (n) requires each Tier III trainset to be equipped with a brake system health monitoring and diagnostic system to automatically assesses the functionality of the brake system for the entire trainset, both before the trainset departs and while it is en route. As proposed, the railroad must document the details of the monitoring system and diagnostic system, and the means for communicating trainset brake system functionality to the engineer. In its comment, APTA recommended that rather than include this information in a Tier III Safe Operation Plan, a railroad should include this information in its ITM program. FRA agrees with and is adopting APTA's recommendation. It accomplishes the goals of this paragraph, and trainset monitoring and diagnostics relate to inspection, testing, and maintenance. It will also provide FRA approval oversight through the ITM program approval process.

In other comments on this section, APTA recommended that FRA include in paragraph (e)(4) a requirement that railroads conduct additional analysis and testing to determine the maximum safe operating speed for various percentages of operative friction brakes.

As proposed, paragraph (e)(4) requires railroads to determine through analysis and testing the maximum speed for safely operating and stopping their Tier III trainsets using the friction brake system alone without causing thermal-related damage to the equipment or infrastructure. APTA recommended the additional analysis and testing to adequately quantify the braking performance for movement of defective equipment. TCRR's comments on the NPRM were in agreement with APTA's on this paragraph. TCRR cautioned that the movement of defective equipment requirements must refer to paragraph (e) of this section and require railroads to conduct appropriate analysis and testing to determine the maximum safe operating speed for various percentages of operative friction brakes. FRA agrees with APTA's and TCRR's comments.

Accordingly, FRA is adopting the recommendation in paragraph (e) to make clear further testing and analysis is required to determine the safe maximum operating speed for various percentages of friction brakes less than 100-percent operative. FRA expects the railroad to include these determination in its ITM program.

FRA also received comments on paragraph (o) of this section from APTA and Alstom. As proposed, this paragraph requires Tier III equipment to be equipped with a means to secure unattended equipment against unintentional movement. Because the securement technique may be technology-specific to a particular trainset, FRA proposed that the procedures and means necessary for securing unattended equipment based on the grade conditions be included in the Tier III Safe Operation Plan, which in turn could be used to help demonstrate the effectiveness of the securement method(s). FRA further proposed to define the term ''unattended equipment'' to have the same meaning as in § 238.231(h)(4), which provides that unattended equipment is equipment left standing and unmanned in such a manner that a qualified person cannot readily control the brake system of the equipment. FRA intended the cross reference to § 238.231(h)(4) to be limited specifically to the definition of ''unattended equipment,'' for consistency and to remove any ambiguity as to the meaning of the term, because FRA has already defined the term in this part 238.

In APTA's comment on paragraph (o), APTA objected to the cross reference to § 238.231(h)(4). APTA raised concern that its inclusion in the regulatory text could sweep in the Tier I requirement that Tier III trainsets be equipped with a parking or handbrake. APTA stated that was not part of the consensus agreement on the proposed rule text presented to FRA in which wheel chocks could be used to secure unattended equipment under certain circumstances. Nonetheless, APTA did agree to FRA's use of the modifier ''unattended'' in this paragraph to describe the type of equipment to be secured, noting that technical specifications normally state that the equipment can be left for an indefinite time period, which corresponds to unattended. Further, consistent with its other comments, APTA stated that this paragraph's reference to a Tier III Safe Operation Plan was unnecessary because the physical means for securing the trainset will be addressed during the design review and the procedures for securing the trainset will be defined in the railroad's operating rules. In its comments on this paragraph, Alstom similarly objected to the addition of the cross reference to § 238.231(h)(4), stating it was not consistent with the consensus agreement on the proposed regulatory text to permit the use of wheel chocks to secure unattended equipment under certain conditions.

FRA makes clear that the reference to § 238.231(h)(4) was not intended to mean that § 238.231(h)(4)'s requirements for parking or hand brakes apply to this § 238.731(o). As explained above, the reference was intended to capture only the definition of ''unattended'' and not sweep into this paragraph requirements concerning parking or hand brakes. However, to guard against ambiguity and for consistent application of the term, in this paragraph of the final rule FRA has incorporated § 238.231(h)(4)'s definition of ''unattended.'' Further, FRA agrees with APTA's recommendation not to include the reference to the Tier III Safe Operation Plan, and it is not included in this paragraph. Yet, FRA believes it necessary to approve the procedures and means necessary for securing unattended equipment on the grade conditions identified, and this paragraph requires such approval. Inclusion in the railroad's operating rules alone is not sufficient as FRA does not approve railroad operating rules under part 217 of this chapter. Further, issues surrounding how equipment will be properly secured while unattended are operational in nature and thus capturing those issues in a design review is not sufficient. In the interim, FRA will of course work with any proposed Tier III operation to ensure that the specific procedures and means of securing unattended equipment as required under this paragraph are properly addressed and documented. In this regard, and as FRA made clear in the NPRM, certain brake system requirements are imposed by Federal statute, 49 U.S.C. ch. 203. Specifically, 49 U.S.C. 20302(a)(1)(B) requires ''efficient handbrakes.'' Railroads must

ensure that those statutory requirements are addressed.

Interior Fittings and Surfaces

Section 238.733 Interior Fixture Attachment

This section contains requirements for interior fixture attachment strength for Tier III trainsets. This section relates to strength requirements for seats and luggage racks in §§ 238.735 and 238.737, respectively, to help prevent and mitigate hazards associated with occupants impacting interior objects and surfaces during a collision.

In its comments on this section and §§ 238.735 and 238.737, APTA recommended that FRA not reference the attachment strength requirements in § 238.233, Interior fittings and surface, for Tier I equipment. The NPRM proposed to allow compliance with those strength requirements, specifically, 8g longitudinal, 4g vertical, and 4g lateral, as an option instead of using Railway Group Standard GM/RT2100 and 5g longitudinal, 3g vertical, and 3g lateral attachment strength requirements. As discussed in the ETF's May 2017 meeting, APTA believes the 5g, 3g, and 3g attachment strength requirements are sufficient to serve as the minimum safety requirements and are consistent with the dynamic collision requirements in § 238.705(b)(2), which provides that, if GM/RT2100 is used, the average deceleration experienced by each vehicle in a Tier III trainset may not exceed 5g during any 100-ms period. APTA added that, in developing the NPRM, the ETF consensus for use of the strength requirements in § 238.233 was for Tier I alternative trainsets, as reflected in proposed paragraphs (i) though (k) of appendix G to this part. According to APTA, the ETF's consensus was for Tier III trainsets to comply with the relevant strength requirements in Railway Group Standard GM/RT2100, Issue Four, with the additional requirement to apply a 3g vertical load rather than a 1g vertical load. As noted above, APTA contends that the 5g, 3g, and 3g attachment strength requirements are more harmonious with the Tier III requirements because they are tied to a maximum crash pulse requirement, unlike the 8g, 4g, and 4g requirements in § 238.223.

FRA is not adopting APTA's recommendation. FRA always intended to provide the two options for compliance, as discussed in the NPRM. The first option, in paragraph (a)(1) of this section, allows compliance with the requirements of § 238.233 and APTA PR–CS–S–006–98, Rev. 1, ''Standard for Attachment Strength of Interior Fittings for Passenger Railroad Equipment,'' Authorized September 2005. The second option, in paragraph (a)(2) of this section, allows compliance with section 6.1.4, ''Security of furniture, equipment and features,'' of Railway Group Standard GM/RT2100, Issue Four, ''Requirements for Rail Vehicle Structures,'' Rail Safety and Standards Board Ltd., December 2010, provided: The test conditions of § 238.705(b)(2) are met; interior fixture attachment strength is based on a minimum of 5g longitudinal, 3g vertical, and 3g lateral acceleration resistance; and use of the GM/RT standard is carried out in accordance with any conditions identified by the railroad, as approved by FRA. (This last condition has been modified from the NPRM consistent with FRA's discussion regarding proposed subpart J, under Discussion of Comments and Conclusions, section IV, above.)

The acceleration-based performance standards in § 238.233 and APTA standard PR–CS–S–006–98, Rev. 1, were established after years of industry practice designing interior fittings to withstand the forces due to accelerations of 6g longitudinally, 3g vertically, and 3g laterally, which FRA specifically found to be inadequate to protect against occupant injury (see 64 FR 25540, 25614).[16] The accident performance of interior fixtures designed to comply with § 238.233 and the APTA standard support their continued use for interior attachment strength. However, FRA continues to recognize that some Tier III passenger equipment may not experience accelerations of 8g longitudinally, 4g vertically, or 4g laterally during the dynamic collision scenario in § 238.705, or at higher-speed collisions resulting in collapse of the occupied volume. FRA acknowledges that equipment that does not experience large decelerations during collisions does not need to be designed to these standards in § 238.233 and APTA standard PR–CS–S–006–98, Rev. 1. Accordingly, FRA developed an alternative attachment strength option consistent with international design standards, in paragraph (a)(2) of this section. FRA views the alternative as providing an equivalent level of safety to the now longstanding acceleration resistance requirements in § 238.233 and the APTA standard, with the qualification that no acceleration-based load higher than 5g is experienced as provided in paragraph (a)(2) of this section. FRA finds no additional burden is imposed by providing two options to demonstrate compliance with this section, and therefore declines to adopt APTA's suggestion to remove the first option.

As noted above, paragraph (a)(2)(iii) provides for use of the GM/RT standard in accordance with any conditions identified by the railroad and approved by FRA. According to APTA, in its comments on this NPRM, the proposed reference to a Tier III Safe Operation plan in this paragraph was unnecessary because the criteria for the acceleration pulse in the Tier III collision scenario must be met as provided in § 238.705(b)(2). Although FRA agrees not to include a reference to a Tier III Safe Operation Plan, FRA continues to believe that FRA approval of the conditions involving the option to comply with paragraph (a)(2) rather than paragraph (a)(1) is necessary. FRA seeks to ensure that compliance with paragraph (a)(2) provides an equivalent level of safety to the existing requirements in § 238.233 and the APTA standard, and that no acceleration-based load higher than 5g is experienced. Nonetheless, as noted above and discussed under proposed subpart J in the Discussion of Comments and Conclusions, section IV, FRA, based on input provided by the ETF, is working towards developing procedures and processes to provide such FRA approval. As always, FRA will work with any proposed Tier III operation to ensure that the requirements of this section are properly implemented. Because FRA has otherwise adopted the substantive requirements of this section as proposed in the NPRM, FRA is not repeating the full analysis in the NPRM supporting and explaining the requirements of this section, see 81 FR 88006, 88034–88036.

FRA does note it is incorporating by reference APTA PR–CS–S–006–98, Rev. 1 (previously designated as SS–C&S–006), ''Standard for Attachment Strength of Interior Fittings for Passenger Railroad Equipment,'' Authorized September 2005, in paragraph (a)(1) of this section and in paragraph (i) of appendix G to this part; and section 6.1.4, ''Security of furniture, equipment and features,'' of Railway Group Standard GM/RT2100, Issue Four, ''Requirements for Rail Vehicle Structures,'' Rail Safety and Standards

[16] When developing the requirements of the 1999 final rule, FRA concluded that due to the injuries caused by broken seats and other loose fixtures, which were designed to withstand the forces due to accelerations of 6g in the longitudinal direction, 3g in the vertical direction, and 3g in the lateral direction, as revealed in FRA and NTSB investigations of passenger train accidents, the design practice was inadequate.

Board Ltd., December 2010 in paragraph (a)(2) of this section and § 238.741(b)(2).

APTA PR–CS–S–006–98 addresses fittings used in commuter and intercity railcar and locomotive cab interiors. It specifies the minimum strength and attachment strength for interior sub-systems, including overhead luggage racks, stanchions and handholds, windscreen and partitions, food service equipment, and miscellaneous interior fittings. This standard also contains recommendations for design requirements and design practices for such interior sub-systems. APTA PR–CS–S–006–98 is available to all interested parties online at *www.apta.com*. Additionally, FRA will maintain a copy available for review.

Section 6.1.4 of GM/RT2100 contains requirements for securement of furniture, on-board equipment, and other trainset features to help mitigate against injuries to passengers and crew from secondary impacts within the occupied volume. GM/RT2100 is available to all interested parties online at *www.rgsonline.co.uk/Railway_Group_Standards*. Additionally, FRA will maintain a copy available for review.

Section 238.735 Seat Crashworthiness (Passenger and Cab Crew)

This section contains the seat strength requirements for Tier III trainsets and relates to the strength requirements for interior fixtures and luggage racks in §§ 238.733 and 238.737, respectively, as noted above. APTA and Alstom both commented on this section. Specifically, APTA commented on the proposed passenger seating requirements in paragraph (a) based on the same premise as its comment on § 238.733(a), as discussed above. APTA recommended that the option in proposed paragraph (a)(1) to comply with § 238.233 and APTA standard PR–CS–S–006–98 not be included. Instead, APTA suggested that the sole option to demonstrate compliance would be based on section 6.2, ''Seats for passengers, personnel, or train crew,'' of Railway Group Standard GM/RT2100, Issue Four, ''Requirements for Rail Vehicle Structures,'' Rail Safety and Standards Board Ltd., December 2010, under the same acceleration resistance conditions APTA recommended for § 238.733(a)(2)(ii). As the underlying issue APTA raises applies equally for both sections, FRA is not repeating the full discussion here. For the reasons discussed under § 238.733(a), above, FRA is not adopting APTA's recommendation and is therefore retaining both compliance options under paragraph (a).

Similarly, APTA also commented that the proposed reference to a Tier III Safe Operation Plan under paragraph (a)(2)(iii) was unnecessary because the criteria for the acceleration pulse in the Tier III collision scenario must be met as provided in § 238.705(b)(2). Although FRA agrees not to include a reference to a Tier III Safe Operation Plan, FRA continues to believe that FRA approval of the conditions involving the option to comply with paragraph (a)(2) rather than paragraph (a)(1) is necessary for safety. Accordingly, paragraph (a)(2)(iii) provides for such FRA approval rather than refer to a Tier III Safe Operation Plan. Please see § 238.733(a)(2)(iii), above, and proposed subpart J, under Discussion of Comments and Conclusions, section IV, above, for a fuller discussion of the comment and this requirement. FRA notes that Alstom, in commenting on this section in the NPRM, stated that paragraphs (a)(1) and (2) are not fully equivalent in terms of scope of application. Although the requirements of the paragraph are different, FRA has always intended these requirements to provide an equivalent level of safety, given the different circumstances surrounding their application. FRA will work with any proposed Tier III operation to ensure that the requirements of paragraph (a) are properly implemented.

FRA notes it is incorporating by reference APTA PR–CS–S–016–99, Rev. 2, ''Standard for Passenger Seats in Passenger Rail Cars,'' Authorized October 2010, in paragraph (a)(1) of this section and in paragraph (j) of appendix G to this part; and section 6.2, ''Seats for passengers, personnel, or train crew,'' of Railway Group Standard GM/RT2100, Issue Four, ''Requirements for Rail Vehicle Structures,'' Rail Safety and Standards Board Ltd., December 2010, in paragraph (a)(2) of this section.

APTA PR–CS–S–016–99 addresses row-to-row passenger seating in commuter and intercity railcars. APTA PR–CS–S–016–99 is available to all interested parties online at *www.apta.com*. Additionally, FRA will maintain a copy available for review. However, FRA makes clear the rule does not require compliance with section 6.0, ''Seat durability testing,'' of this APTA standard. Seat durability testing is beyond the scope of this regulation because the testing focuses on the optimal life of the seats—not their safety performance.

Section 6.2 of GM/RT2100 contains design specifications and tolerances for passenger and crew seating. GM/RT2100 is available to all interested parties online at *www.rgsonline.co.uk/Railway_Group_Standards*. Additionally, FRA will maintain a copy available for review.

Paragraph (b) contains requirements for the crashworthiness of seats provided for an employee in the cab of a Tier III trainset. Unlike passenger seating, FRA proposed in paragraph (b)(1) that cab seats must comply with the requirements in § 238.233(e), (f), and (g), and the performance, design, and test criteria of AAR–RP–5104, ''Locomotive Cab Seats,'' April 2008, which FRA proposed to incorporate by reference in paragraph (b)(2) and paragraph (k)(2) of appendix G to this part. Although not submitted as a comment, AAR made FRA aware that it is archiving AAR–RP–5104. FRA therefore requested assistance from the ETF during the May 2017 meeting, and a small work group was convened to address the problem. The group recommended back to the ETF to excerpt language from section 3 of AAR–RP–5104 that prescribes minimum loading requirements for the seat itself, and place that language into the final rule. When the recommendation was presented to the ETF, industry members were adamantly opposed, stating that the requirements in section 3 of AAR–RP–5104 were durability standards and not safety-related. In fact, APTA, in a comment submitted after the close of the comment period, recommended deleting the reference to AAR–RP–5104 and its proposed paragraph (b)(2) entirely, stating that proposed paragraph (b)(1) adequately defines the requirements for Tier III cab seating.

Resultantly, FRA has not adopted proposed paragraph (b)(2) and FRA is not including a requirement to comply with any portion of AAR–RP–5104. In turn, proposed paragraph (b)(1) is designated as (b) of this section. As proposed, paragraph (b) requires compliance with § 238.233(e), (f), and (g). However, with respect to the acceleration-based loading requirements specified in § 238.233(f), FRA makes clear in paragraph (b) that it expects for Tier III (and Tier I alternative) trainsets the cab seat to remain attached to the trainset structure when subjected to an 8g longitudinal acceleration-based load applied to the combined mass of the seat and a 95th-percentile male. FRA recognizes that this constitutes the more severe scenario to be tested. It is more severe than an 8g acceleration-based load applied solely to the mass of the cab seat. It is also more severe than testing under AAR–RP–5104, which provides for testing the seat with 250 pounds impacting the seatback at 3g. FRA concludes that if the cab seat can remain attached when subjected to an 8g acceleration-based load applied to the combined mass of the cab seat and

a 95th-percentile male, then the seat should remain attached under foreseeable collision scenarios.

Section 238.737 Luggage Racks

This section contains requirements to constrain the longitudinal and lateral motion of articles stowed in luggage racks, and relates to the strength requirements for interior fixtures and seats in §§ 238.733 and 238.735, respectively, as noted above.

FRA received no comments on paragraph (a) and has adopted it as proposed. Please see the discussion of paragraph (a) in the NPRM (81 FR 88006, 88036). Nonetheless, APTA commented on the proposed luggage rack strength requirements in paragraph (b) based on the same premise as its comments on §§ 238.733(a) and 238.735(a), as discussed above. APTA recommended that the option in proposed paragraph (b)(1) to comply with § 238.233 not be included. Instead, APTA suggested that the sole option to demonstrate compliance would be based on section 6.8, ''Luggage stowage,'' of Railway Group Standard GM/RT2100, Issue Four, ''Requirements for Rail Vehicle Structures,'' Rail Safety and Standards Board Ltd., December 2010, specifically under the same acceleration resistance conditions APTA recommended for §§ 238.733(a)(2)(ii) and 238.735(a)(2)(ii). As the underlying issue APTA raises applies equally here, FRA is not repeating the full discussion. For the reasons discussed under §§ 238.733(a) and 238.735(a), above, FRA is not adopting APTA's recommendation and is therefore retaining both compliance options under paragraph (b).

Similarly, APTA also commented that the proposed reference to a Tier III Safe Operation plan under paragraph (b)(2)(iii) was unnecessary because the criteria for the acceleration pulse in the Tier III collision scenario must be met as provided in § 238.705(b)(2). Although FRA agrees not to include a reference to a Tier III Safe Operation Plan, FRA continues to believe that FRA approval of the conditions involving the option to comply with paragraph (b)(2) is necessary for safety. Accordingly, paragraph (b)(2)(iii) provides for such FRA approval rather than refer to a Tier III Safe Operation Plan. Please see §§ 238.733(a)(2)(iii) and 238.735(a)(2)(iii), above, and proposed subpart J, under Discussion of Comments and Conclusions, section IV, above, for a fuller discussion of the comment and this requirement. Further, FRA expects that in demonstrating compliance with this requirement, the railroad must address how the mass of the luggage was considered when applied to the loading conditions defined in paragraph (b)(2)(ii).

FRA notes it is incorporating by reference section 6.8, ''Luggage stowage,'' of Railway Group Standard GM/RT2100, Issue Four, ''Requirements for Rail Vehicle Structures,'' Rail Safety and Standards Board Ltd., December 2010, in paragraph (b)(2) of this section. Section 6.8 contains requirements for luggage stowage, either on the floor or in overhead racks. As noted above, GM/RT2100 is available to all interested parties online at *www.rgsonline.co.uk/Railway_Group_Standards*. Additionally, FRA will maintain a copy available for review.

Emergency Systems

Section 238.741 Emergency Window Egress and Rescue Access

This section establishes requirements for emergency egress and rescue access through windows or alternative openings in passenger cars as part of an emergency window egress and rescue access plan for Tier III trainsets. The ETF recognized that any regulation would need to allow multiple approaches to facilitate the adoption of service-proven, high-speed trainset technology. Specifically, the methods used to manufacture high-speed trainsets are often governed by consideration of the effects of aerodynamics and noise; together with the potential need to pressurize occupied compartments, these can affect the way window glazing is installed and mounted in some trainset designs. Therefore, the ETF recommended performance-oriented requirements to allow necessary flexibility where an appropriate safety case can be made.

FRA did not receive any comments on the requirements of this section as described in the NPRM. However, FRA is clarifying in paragraph (b) the reference to a Tier III ITM program, rather than to a Tier III ITM plan, as proposed in the NPRM. Otherwise, FRA is adopting this section as proposed. Accordingly, as this section of the final rule is virtually identical to the proposed version, the full analysis and discussion of this section provided in the NPRM is not repeated here (see 81 FR 88006, 88019–88020).

Section 238.743 Emergency Lighting

This section contains the emergency lighting requirements for Tier III trainsets. As proposed, paragraph (a) provides that the requirements are the same as the emergency lighting requirements in § 238.115, except for those specific to emergency lighting back-up power systems in paragraph (b). Paragraph (b), in turn, permits compliance with alternative, crash loading resistance requirements, to demonstrate the capability of back-up power systems to function after the initial shock caused by a collision or derailment.

APTA commented on the proposed back-up power requirements in paragraph (b) based on the same premise as its comments on §§ 238.733, 238. 735, and 238.737, above. APTA recommended that the option in proposed paragraph (b)(1) of this section to comply with the acceleration resistance requirements in § 238.115 not be included. Instead, APTA suggested that the sole option to demonstrate compliance be based on section 6.1.4, ''Security of furniture, equipment and features,'' of Railway Group Standard GM/RT2100, Issue Four, ''Requirements for Rail Vehicle Structures,'' Rail Safety and Standards Board Ltd., December 2010, under the same conditions APTA recommended for §§ 238.733(a)(2)(ii), 238.735(a)(2)(ii), and 238.737(b)(2)(ii). As the underlying issue APTA raises generally applies equally for all sections, FRA is not repeating the full discussion here, and generally for the reasons discussed under these sections, above, FRA is not adopting APTA's recommendation. This paragraph retains both compliance options. Further, FRA makes clear that § 238.115 is contained in subpart B of part 238, and the scope of subpart B applies to all passenger equipment, regardless of operating speed. Consequently, FRA could have included specific back-up power requirements for Tier III trainsets in subpart B's § 238.115 but chose instead to place them here in subpart H for ease of reference.

FRA notes § 238.743(b)(1) in the final rule references the acceleration-based loads in § 238.115(a)(4)(ii), which are 8g, longitudinally, and 4g, laterally and vertically. In the NPRM, FRA inadvertently referenced § 238.115(b)(4)(ii), which was clear error because there is no such paragraph in § 238.115. FRA has corrected the reference.

Paragraph (b)(2) provides the second option for demonstrating the crashworthiness of emergency lighting back-up power systems. A railroad may use the loading requirements defined in section 6.1.4, ''Security of furniture, equipment and features,'' of GM/RT2100, under specified conditions. In the NPRM, FRA proposed that back-up power systems have an attachment strength sufficient to resist minimum loads of 5g longitudinally, 3g laterally, and 3g vertically. However, FRA's

proposal was inadvertently overbroad. FRA intended for the back-up power supply to remain functional after being subjected to the initial shock of a collision or derailment, whether or not remaining attached in place.

Consistent with its comments on similar proposed provisions, APTA also commented that the proposed reference to a Tier III Safe Operation plan under paragraph (b)(2)(iii) was unnecessary because the criteria for the acceleration pulse in the Tier III collision scenario must be met as provided in § 238.705(b)(2). Although FRA agrees not to include a reference to a Tier III Safe Operation Plan, FRA continues to believe that FRA approval of the conditions involving the option to comply with paragraph (b)(2) is necessary for safety. Accordingly, paragraph (b)(2)(iii) provides for such FRA approval rather than refer to a Tier III Safe Operation Plan. Please see §§ 238.733(a)(2)(iii), 238.735(a)(2)(iii), and 238.737(b)(2)(iii), above, and proposed subpart J, under Discussion of Comments and Conclusions, section IV, above, for a fuller discussion of the comment and this requirement.

FRA notes it is incorporating by reference section 6.1.4, ''Security of furniture, equipment and features,'' of Railway Group Standard GM/RT2100, Issue Four, ''Requirements for Rail Vehicle Structures,'' Rail Safety and Standards Board Ltd., December 2010, into paragraph (b)(2) of this section. Section 6.1.4 contains requirements for the securement of furniture, equipment, and other features. As noted above, GM/RT2100 is available to all interested parties online at *www.rgsonline.co.uk/Railway_Group_Standards*. Additionally, FRA will maintain a copy available for review.

Cab Equipment

Section 238.751 Alerters

This section contains requirements for alerters on Tier III passenger trainsets. In commenting on this section in the NPRM, APTA recommended removal of the proposed references to a Tier III Safe Operation Plan, consistent with its comments on proposed subpart J. As discussed below, this section does not include references to a Tier III Safe Operation Plan but does ensure FRA oversight. Otherwise, FRA has adopted this section as proposed and has therefore not repeated the full analysis of this section in the NPRM (see 81 FR 88006, 88037–88038).

As proposed in the NPRM, paragraph (b) would have required the railroad to determine the appropriate time period within which the engineer must acknowledge the alerter and include that determination in the railroad's Tier III Safe Operation Plan for review and approval by FRA. In its comment, APTA stated that inclusion in the Safe Operation Plan was unnecessary because the basis for setting the alerter control timing would be addressed during the design review process and FRA could review the railroad's alerter timing determination then. Although FRA agrees not to include a reference to a Tier III Safe Operation Plan, FRA continues to believe that FRA approval of the periodicity of the alerter alarm, as well as the time period within which the engineer must react to that alarm, is necessary for safety. Nonetheless, as noted above and discussed under proposed subpart J in the Discussion of Comments and Conclusions, section IV, FRA, based on input provided by the ETF, is working towards developing procedures and processes to provide such FRA approval. As always, FRA will work with any proposed Tier III operation to ensure that the requirements of this paragraph and this section are properly implemented. In this regard, FRA makes clear it intends alerter control timing to be set by the railroad taking into consideration maximum train speed and capabilities of the signal system.

As proposed in the NPRM, paragraph (d) would have required specifying in the railroad's Tier III Safe Operation Plan the necessary actions of the engineer responding to a full-service brake application initiated after the engineer failed to properly acknowledge the alerter. APTA, in its comment, stated that this was also unnecessary as these required actions would be contained in the railroad's operating rules and the ''engineer's training program.'' Again, although FRA agrees not to include a reference to a Tier III Safe Operation Plan, FRA continues to believe that FRA approval is necessary, namely, of the actions specified for the engineer to recover the full-service brake application. Inclusion in the railroad's operating rules is not sufficient as FRA does not approve railroad operating rules under part 217 of this chapter. Additionally, these procedures are not intended to be specified in the locomotive engineer certification program required under part 240 of this chapter. Thus, simple inclusion in a training program does not provide the necessary review and approval mechanism FRA desires. Nonetheless, as FRA, based on input provided by the ETF, is working towards developing specific procedures and processes for obtaining such approval, FRA will work with any proposed Tier III operation to ensure the requirements of this paragraph are properly implemented.

Finally, as proposed in the NPRM, paragraph (e) would have required a railroad electing to use alternate technology to an alerter, to provide the function(s) of an alerter, to conduct a hazard analysis as part of its Tier III Safe Operation Plan. The intent behind the analysis was to demonstrate that the alternate alerter technology provided an equivalent level of safety. APTA, in its comment, stated that inclusion in a Tier III Safe Operation Plan was unnecessary because the demonstration of an equivalent level of safety would be performed during the design review process, with the results of the safety analysis being used to support the determination. Although FRA agrees not to include a reference to a Tier III Safe Operation Plan, FRA continues to believe that FRA approval of the equivalency determination is necessary for safety, and FRA will work with any proposed Tier III operation to ensure that the requirements of this paragraph are properly implemented, as discussed above. In this regard, FRA has clarified that the required analysis is not limited to a ''hazard analysis,'' as proposed in the NPRM, but provides for a broader evaluation.

Section 238.753 Sanders

This section introduces requirements for sanders on Tier III trainsets. In their comments on the NPRM, APTA and TCRR objected to inclusion of this section in the final rule. According to APTA and TCRR, in the international market, sanders are not considered a safety critical component but rather only performance enhancing and not critical to the safe operation of the trainset. Both APTA and TCRR further stated that if a railroad were to determine that sanders were critical to the safe operation of the trainset, then the sanders would be defined and addressed in the railroad's ITM program; under these circumstances, a trainset with defective sanders could move only under the regulatory provisions dealing with movement of defective equipment. Thus, APTA and TCRR believed that providing specific requirements for sanders in this section is unnecessary.

FRA disagrees with this recommendation. As explained in the NPRM, this section does not require Tier III trainsets to be equipped with sanders; this section applies only if the railroad determines sanders are a required trainset component. Some railroads may determine that sanders

are necessary for the safe operation of Tier III trainsets, whereas other railroads may not. Nonetheless, FRA agrees that if the railroad deems the sanders safety critical, they would be so identified in the railroad's ITM program. No reference to a Tier III Safe Operation Plan is necessary. Accordingly, trainsets equipped with such sanders that are defective could move only in compliance with the requirements covering movement of defective equipment. Please also see the discussion of this proposed section in the NPRM (81 FR 88006, 88038). As always, FRA will work with any proposed Tier III operation to ensure the requirements of this section are properly implemented.

Appendix A to Part 238—Schedule of Civil Penalties

The final rule includes an amended schedule of civil penalties under appendix A to this part. Specifically, the schedule includes civil penalty amounts for violations of the requirements of subpart H of this part. Because the penalty schedule is a statement of policy, notice and comment was not required prior to its revision. *See* 5 U.S.C. 553(b)(3)(A). Accordingly, FRA has amended the penalty schedule to reflect the addition of subpart H.

Appendix B to Part 238—Test Methods and Performance Criteria for the Flammability and Smoke Emission Characteristics of Materials Used in Passenger Cars and Locomotive Cabs

FRA is revising this appendix to clarify the application of the floor fire test in the table of ''Test Procedures and Performance Criteria for the Flammability and Smoke Emission Characteristics of Materials Used in Passenger Cars and Locomotive Cabs'' in paragraph (c) to Tier III passenger equipment. FRA received no comments on this clarification and has adopted it as proposed. As this portion of the final rule is identical to the proposed version, FRA is not repeating the analysis provided in the NPRM (see 81 FR 88006, 88039).

Appendix F to Part 238—Alternative Dynamic Performance Requirements for Front End Structures of Cab Cars and MU Locomotives

FRA is revising this appendix so that it applies to Tier III passenger equipment. FRA received no comments on this change and has adopted it as proposed. As this portion of the final rule is identical to the proposed version, FRA is not repeating the analysis of this change provided in the NPRM (see 81 FR 88006, 88039).

Appendix G to Part 238—Alternative Requirements for Evaluating the Crashworthiness and Occupant Protection Performance of a Tier I Passenger Trainset

As proposed, FRA is adding appendix G to this part to provide alternative crashworthiness and occupant protection performance requirements for Tier I passenger trainsets instead of the conventional requirements of §§ 238.203, 238.205, 238.207, 238.209(a), 238.211, 238.213, and 238.219 in subpart C of this part. The technical contents of appendix G remain materially unchanged from those developed for the original Technical Criteria and Procedures Report.

FRA intends for these alternative requirements to be applied to a Tier I trainset as a whole. Accordingly, compliance must be demonstrated either through application of the conventional requirements in subpart C, or through application of the requirements in this appendix G, not a combination of both. They also apply in addition to the requirements of §§ 238.209(b), 238.215, 238.217, and 238.233, and APTA standards for occupant protection, as specified in this appendix. Although the appendix may refer to specific units of rail equipment in a trainset, the alternative requirements in this appendix apply only to a Tier I trainset as a whole, as noted above. Further, use of this appendix to demonstrate alternative crashworthiness and occupant protection performance for Tier I passenger trainsets is subject to FRA review and approval under § 238.201.

In general, where alternatives to the conventional Tier I requirements are given in this appendix G, those requirements are also identified in the Tier III requirements in subpart H—Specific Requirements for Tier III Passenger Equipment. See the discussion in the section-by-section analysis for subpart H, which applies to Tier I trainsets seeking qualification under this appendix. As FRA did not receive any comments on this appendix, FRA is not repeating the full analysis of this appendix provided in the NPRM, see 81 FR 88006, 88039–88040.

However, FRA does highlight that in paragraph (i) of this appendix, FRA is incorporating by reference APTA standard PR–CS–S–034–99, Rev. 2, ''Standard for the Design and Construction of Passenger Railroad Rolling Stock,'' Authorized June 2006, for interior fixtures. The standard is intended to address forces applied to the carbody and truck structures during collisions, derailments, and other accident conditions. APTA PR–CS–S–034–99 is available to all interested parties online at *www.apta.com*. Additionally, FRA will maintain a copy available for review.

Further, in paragraph (j) of this appendix, FRA is incorporating by reference APTA standard PR–CS–S–016–99, Rev. 2, ''Standard for Passenger Seats in Passenger Rail Cars,'' Authorized October 2010, with the exception of Section 6 of the standard, which relates to the durability testing of seats. FRA considers the durability testing of seats to be beyond the scope of this final rule for the same reasons discussed under § 238.735, above.

Appendix H to Part 238—Rigid Locomotive Design Computer Model Input Data and Geometrical Depiction

FRA is adding this appendix to part 238 to formally provide input data and a geometrical depiction necessary to create a computer model of the rigid locomotive design in § 238.705(a)(4) for use in evaluating the occupied volume integrity of a Tier III trainset (and a Tier I alternative passenger trainset under appendix G) in a dynamic collision scenario. Section 238.705(a) outlines the required conditions for performing a dynamic collision scenario involving an initially-moving trainset impacting an initially-standing train having the rigid locomotive leading its consist. As explained in § 238.705(a)(4), the initially-standing train is made up of a rigid locomotive and five identical passenger coaches having the following characteristics: The locomotive weighs 260,000 pounds and each coach weighs 95,000 pounds; the locomotive and each coach crush in response to applied force as specified in Table 1 to § 238.705; and the locomotive has a geometric design as depicted in Figure 1 to this appendix H.

This appendix is intended to establish a consistent definition for locomotive geometry for use in conducting dynamic computer simulations. The input data, in the form of an input file, contains the geometry for approximately the first 12 feet of the rigid locomotive design. Because this input file is for a half-symmetric model, a locomotive mass corresponding to 130,000 pounds of weight is provided for modeling purposes—half the 260,000 pounds of weight specified for the locomotive in § 238.705(a)(4). Figure 1 to this appendix provides two views of the locomotive's geometric depiction. The input data is contained in Appendix C to FRA's Technical Criteria and Procedures Report, available at *http://www.fra.dot.gov/eLib/details/L01292#p4_z50_gD_lRT*.

VI. Regulatory Impact and Notices

A. Executive Orders 12866, 13563, and 13771, and DOT Regulatory Policies and Procedures

This final rule is an economically significant regulatory action within the meaning of Executive Order 12866 and DOT policies and procedures. *See* 44 FR 11034 (Feb. 26, 1979).

FRA has prepared and placed in the docket a Regulatory Impact Analysis (RIA) addressing the economic impacts of this final rule. The RIA estimates the costs of this final rule that are likely to be incurred over a 30-year period. FRA estimated the costs of this final rule using discount rates of 3 and 7 percent, respectively. For the 30-year period analyzed, the present value of the estimated high-range quantified net cost savings for this final rule is $837.8 million when discounted at 3 percent and $541.9 million when discounted at 7 percent. Annualized net cost savings total approximately $42.7 million when discounted at 3 percent and $43.7 million when discounted at 7 percent.

This final rule addresses several limitations in the Code of Federal Regulations pertaining to passenger equipment. Prior to publication of this final rule, the PESS in 49 CFR part 238 did not comprehensively address safety requirements for passenger rail equipment at speeds above 150 mph. Further, the regulatory framework established Tier I safety compliance through equipment requirements that were more design-based, and therefore limited the application of contemporary design techniques and innovative technology.

This final rule amends FRA's PESS and adds a new equipment tier (Tier III) to facilitate the safe implementation of high-speed rail at speeds up to 220 mph. The final rule also establishes alternative crashworthiness performance standards to qualify passenger rail equipment for Tier I operations (Tier I alternative). In addition, FRA is increasing the maximum allowable speed for Tier II operations from 150 mph to 160 mph, making it consistent with prior changes in 49 CFR parts 213 and 238 for Vehicle/Track Interaction (VTI) Safety Standards.

There are several HSR projects in development, such as Amtrak's next-generation Acela, Texas High-Speed Rail, and California's high-speed rail project, which are all expected to benefit from implementation of the rule. Additionally, FRA believes that other HSR operations may be initiated due to the publication of this final rule. The costs, cost savings, and benefits associated with the Tier III requirements of this rule were developed looking at all possible operations in the United States. FRA researched HSR projects that were most viable, focusing on all publicly available business models for HSR projects. FRA developed an economic analysis that could be applied to any individual Tier III operation in the United States, including Amtrak's next-generation Acela. The main costs savings result from minimizing the costs of right-of-way acquisition, especially in high population urban areas, such as New York, Washington, Miami, and other large metropolitan areas. The provisions of the final rule's Tier III passenger equipment safety standards allow the service to use existing rights-of-way, permitting the use of track shared with other rail service (*i.e.,* blended track).

FRA estimates that between $227.7 million and $523.3 million (when discounted at a 7-percent rate) or between $351.3 million and $808.8 million (when discounted at a 3-percent rate) in quantifiable costs will be borne by the industry over a future 30-year period in availing itself of the rule's new regulatory framework. Note that industry will only incur these costs if it chooses to test to demonstrate compliance with either the Tier I alternative, or decides to implement Tier III operations. The added alternative Tier I standards provide an option for railroads to use different types or designs of passenger equipment in Tier I service and will not impose any cost on existing rolling stock or new equipment qualifying under existing regulations. The new Tier III requirements will not impose any cost on existing rolling stock or new equipment qualifying under existing regulations (existing passenger rolling stock is Tier I and II; there is no Tier III rolling stock in operation in the U.S.).

TABLE 1—REGULATORY COST SUMMARY

[$ in millions]

Description	3%	7%
High Range: [17]		
Tier I Alternative Equipment Costs	$59.6	$39.1
Tier III Infrastructure Costs	749.2	484.2
Total Costs	808.8	523.3
Annualized Costs	*41.3*	*42.2*
Low Range: [18]		
Tier I Alternative Equipment Costs	51.6	34.1
Tier III Infrastructure Costs	299.7	193.7
Total Costs	351.3	227.7
Annualized Costs	*17.9*	*18.4*

This final rule will result in significant cost savings for the industry. Estimated infrastructure-related cost savings comprise the most significant driver of cost savings compared to other quantified cost savings (*i.e.,* equipment design and engineering, manufacturing benefits, etc.). Infrastructure cost savings will be generated by the ability of railroad operators to take advantage of a blended operating environment—avoiding costly new construction, maintenance of dedicated track, and acquisition of new rights-of-way. This

[17] High-range costs represent costs at a high funding level with a 25-percent multiplier to adjust for the upper bound confidence level of an HSR system becoming operational. For a more detailed description of the high-range costs, please refer to Section 3 of the RIA.

[18] Low-range costs represent costs at a low funding level with a 10-percent multiplier to adjust for the lower bound confidence level of an HSR system becoming operational. For a more detailed description of the low-range costs, please refer to Section 3 of the RIA.

cost savings is especially attractive to railroad operators that provide service in areas with high population density, where right-of-way acquisition and new railroad construction are significantly more expensive and complex. This rule will increase the probability that new services are introduced and reduce the need for new construction in densely populated areas.

The U.S. passenger rail industry will experience cost savings from this regulatory action because it permits manufacturers to adapt existing designs of rolling stock to meet the new standards and will allow operators to take advantage of a wider variety of trainset designs. Further, the rule will allow Tier I and Tier III operations to use service-proven platforms with the latest technology available. These cost savings will be achieved by adapting technology that exists on the international market to meet FRA's safety requirements and ensuring that all equipment suppliers comply with the same safety standards.

Table 2 provides the estimated industry equipment and infrastructure cost savings and their discounted values at the 3- and 7-percent levels, respectively. High-range cost savings represent cost savings at a high funding level with a 25-percent multiplier to adjust for the confidence level of an HSR system becoming operational. Low-range cost savings represent cost savings at a low funding level with a 10-percent multiplier to adjust for the confidence level of an HSR system becoming operational. For a more detailed description of the low- and high-range cost savings, please refer to the RIA.

TABLE 2—REGULATORY COST SAVINGS RANGE SUMMARY

[$ in millions]

Description	3%	7%
High Range:		
Tier I Alternative Equipment Cost Savings	$315.4	$205.8
Tier III Infrastructure Cost Savings	1,331.3	859.4
Total Cost Savings	1,646.7	1,065.2
Annualized Cost Savings	*84.0*	*85.8*
Low Range:		
Tier I Alternative Equipment Cost Savings	257.5	168.8
Tier III Infrastructure Cost Savings	532.5	343.7
Total Cost Savings	790.1	512.5
Annualized Cost Savings	*40.3*	*41.3*

Table 3 below displays the net cost savings of this final rule, categorized by either Tier I alternative or Tier III costs and cost savings. Discounted net regulatory cost savings will be between $438.8 million (low range) and $837.8 million (high range) at the 3-percent level, and between $284.8 million (low range) and $541.9 million (high range) at the 7-percent level. Annualized net regulatory cost savings are between $22.4 million and $42.7 million when discounted at 3 percent and between $22.9 million and $43.7 million when discounted at 7 percent.

TABLE 3—NET REGULATORY COST SAVINGS

[$ in millions]

Description	3%	7%
High Range:		
Tier I Alternative Costs	$59.6	$39.1
Tier III Costs	749.2	484.2
Total Costs	*808.8*	*523.3*
Cost Savings Tier I Alternative	315.4	205.8
Cost Savings Tier III	1,331.3	859.4
Total Cost Savings	*1,646.7*	*1,065.2*
Net Cost Savings Tier I Alternative	255.8	166.7
Net Cost Savings Tier III	582.1	375.2
Total Net Cost Savings	*837.8*	*541.9*
Annualized Net Cost Savings	42.7	43.7
Low Range:		
Tier I Alternative Costs	51.6	34.1
Tier III Costs	299.7	193.7
Total Costs	*351.3*	*227.7*
Cost Savings Tier I Alternative	257.5	168.8
Cost Savings Tier III	532.5	343.7
Total Cost Savings	*790.1*	*512.5*
Net Cost Savings Tier I Alternative	205.9	134.7

TABLE 3—NET REGULATORY COST SAVINGS—Continued

[$ in millions]

Description	3%	7%
Net Cost Savings Tier III	232.8	150.1
Total Net Cost Savings	*438.8*	*284.8*
Annualized Net Cost Savings	22.4	22.9

This final rule is considered an Executive Order 13771 deregulatory action. Details on the estimated cost savings of this final rule can be found in the RIA.

B. Regulatory Flexibility Act and Executive Order 13272

The Regulatory Flexibility Act (5 U.S.C. 601 *et seq.*), as amended by the Small Business Regulatory Enforcement Fairness Act of 1996 (SBREFA), generally requires an agency to prepare a regulatory flexibility analysis describing the impact of the regulatory action on small entities as part of the rulemaking. Small entities include small businesses, small organizations, and governmental jurisdictions. An agency must conduct a regulatory flexibility analysis unless it determines and certifies that the rule is not expected to have a significant economic impact on a substantial number of small entities. FRA developed this final rule in accordance with Executive Order 13272, ''Proper Consideration of Small Entities in Agency Rulemaking,'' and DOT's procedures and policies to promote compliance with the Regulatory Flexibility Act to ensure potential impacts of rules on small entities are properly considered.

Prior to this final rule, the Passenger Equipment Safety Standards in part 238 did not comprehensively address safety requirements for passenger rail equipment at speeds above 150 mph. Further, the former regulatory framework generally set Tier I safety compliance through equipment design requirements, which limited the application of new technology. This final rule changes the passenger rail equipment safety regulatory framework by introducing a new tier of equipment safety standards (Tier III) and also establishes more performance-based crashworthiness and occupant protection requirements in the alternative to those specified for Tier I equipment. Additionally, the final rule increases the maximum allowable speed for Tier II equipment to make it consistent the corresponding speed range in FRA's Track Safety Standards for the track over which the equipment operates. This Final Regulatory Flexibility Analysis is presented to comply with Executive Order 13272 and with the Regulatory Flexibility Act as part of the rulemaking process required by law.

FRA initiated the rulemaking using recommendations made by FRA's RSAC. In general, the rulemaking amends 49 CFR part 238, to reflect new or modified safety requirements for Tier I and Tier III equipment, and to increase the authorized speed limit for Tier II equipment.

1. Description of Regulated Entities and Impacts

The ''universe'' of the entities under consideration includes only those small entities that can reasonably be expected to be directly affected by the provisions of this final rule. For the rule, there is only one type of small entity that will be affected: Small passenger railroads. ''Small entity'' is defined in 5 U.S.C. 601(3) as having the same meaning as ''small business concern'' under section 3 of the Small Business Act. This includes any small business concern that is independently owned and operated, and is not dominant in its field of operation. Under 5 U.S.C. 601(5) ''small entities'' is defined as governments of cities, counties, towns, townships, villages, school districts, or special districts with populations less than 50,000.

The U.S. Small Business Administration (SBA) stipulates ''size standards'' for small entities. It provides that industry sectors relevant for the rulemaking must not exceed the limits listed below (and still classify as a ''small entity''): [19]

- 1,500 employees for railroad rolling stock manufacturing.
- 1,500 employees for line haul operating railroads.
- 1,250 employees for motor and generator manufacturing.
- 1,250 employees for switchgear and switchboard apparatus manufacturing.

Federal agencies may adopt their own size standards for small entities in consultation with SBA, and in conjunction with public comment. Under the authority provided to it by SBA, FRA published a final policy, which formally establishes small entities as railroads that meet the line haulage revenue requirements of a Class III railroad.[20] Currently, the revenue requirements are $20 million or less in annual operating revenue, adjusted annually for inflation. The $20 million limit (adjusted annually for inflation) is based on the Surface Transportation Board's threshold of a Class III railroad, which is adjusted by applying the railroad revenue deflator adjustment.[21] FRA uses this definition for the rule.

Railroads

For purposes of this analysis, there are only two intercity passenger railroads, Amtrak and the Alaska Railroad. Neither is considered a small entity. Amtrak is a Class I railroad and the Alaska Railroad is a Class II railroad. The Alaska Railroad is owned by the State of Alaska, which has a population well in excess of 50,000. There are currently 30 commuter or other short-haul passenger railroad operations in the U.S., most of which are part of larger transportation organizations that receive Federal funds and serve major metropolitan areas with populations greater than 50,000. However, one of these railroads does not fall in this category and is considered a small entity: The Hawkeye Express. The Hawkeye Express provides service to Iowa City, Iowa, and is owned by a Class III railroad, a small entity. FRA notes that it has not analyzed the Saratoga & North Creek Railway as a small entity under this final rule. Because of operational changes subsequent to the NPRM's publication, FRA considers the Saratoga & North Creek Railway a tourist railroad, not subject to this rule.

[19] U.S. Small Business Administration, ''Table of Small Business Standards Matched to North American Industry Classification System Codes,'' effective January 1, 2018.

[20] *See* 68 FR 24891, May 9, 2003.

[21] For further information on the calculation of the specific dollar limit, please see 49 CFR part 1201.

It is important to note that the small railroad being considered in this analysis uses passenger rolling stock that is different from the equipment covered by the rulemaking. Further, the Hawkeye Express would be able to find their current type of train equipment in the market if they decide to acquire new rolling stock over the next 30 years. This final rule does not increase costs for this small passenger railroad. FRA expects the cost to acquire passenger rail equipment will drop as a result of the rulemaking. There will be more variety in trainset models available for passenger operations and options in companies supplying equipment in the U.S. market. Additionally, the railroad may enjoy lower prices as the U.S. passenger rail market is enlarged as a result of the rulemaking, enhancing economies of scale and increasing predictability for equipment orders.

Passenger Railroad Rolling Stock Manufacturing

The passenger rail and urban rapid transit equipment manufacturing sector in the United States has a fairly small number of firms with no more than 15 Original Equipment Manufacturers (OEM) and a few hundred component and subcomponent suppliers.[22] However, for this flexibility analysis, FRA is taking a broader approach by assessing the effect of the regulation on the railroad rolling stock manufacturing sector as defined by the North American Classification System (NAICS), which includes the passenger rail and urban rapid transit equipment manufacturing industry but goes beyond by also covering freight and maintenance-of-way vehicles. This approach includes firms that currently do not manufacture passenger rail equipment but can potentially enter the market. Based on data from the U.S. Census Bureau, employment in these industries is as follows:

- NAICS code 336510, Railroad rolling stock manufacturing, 159 firms in the industry, and 137 firms with less than 500 employees.
- NAICS code 335312, Motor and generator manufacturing, 428 firms in the industry, and 384 firms with less than 500 employees.

The main impact of the rule affecting these industries is the qualification costs for Tier I alternative and Tier III trainsets. FRA worked with the industry to develop new safety criteria to evaluate passenger equipment designed to standards differing from those historically used for procurements in the U.S. As noted in the RIA, companies supplying new trainsets covered by the rulemaking will be required to submit test and analysis results to demonstrate compliance with these new safety standards. However, in the case of rolling stock manufacturing, this cost will only be incurred by the OEM when submitting a qualification package, which would include details regarding the performance of the trainset model under the required tests and analyses. Therefore, small and very small firms supplying OEMs are not expected to be required to submit that information. Small firms could be expected to benefit from existing requirements for minimum domestic content as more trainsets are purchased by U.S. railroad operators. Small businesses have the opportunity to supply OEMs with domestic inputs and to partner with larger firms to allow small domestic producers to meet the needs of the market being created by this final rule. Consequently, FRA expects the rulemaking to have only a positive impact on these small entities as more of them are provided with the opportunity to enter the passenger railroad equipment manufacturing industry.

Significant Economic Impact Criteria

Previously, FRA sampled small railroads and found that revenue averaged approximately $4.7 million (not discounted) in 2006. One percent of average annual revenue per small railroad is $47,000. FRA realizes that some railroads will have revenue lower than $4.7 million. However, FRA estimates that small railroads will not have any additional expenses over the next ten years to comply with the requirements in this rule. Based on this, FRA concludes that the expected burden of this rule will not have a significant impact on the competitive position of small entities, or on the small entity segment of the railroad industry as a whole.

Substantial Number Criteria

This final rule will likely affect any small railroad that is not exempt from its scope or application (see 49 CFR 238.3). Thus, as noted above, this final rule will impact a substantial number of small railroads.

2. Certification

Pursuant to the Regulatory Flexibility Act (5 U.S.C. 605(b)), the Administrator of the Federal Railroad Administration certifies that this rule will not have a significant economic impact on a substantial number of small entities. In the NPRM, FRA requested comments on its certification made as a result of its Regulatory Flexibility Act analysis, see 81 FR 88006, 88044. FRA received no comments. FRA therefore stands with its previous Regulatory Flexibility Act certification.

C. Paperwork Reduction Act

The information collection requirements in this final rule are being submitted to the Office of Management and Budget (OMB) for review and approval in accordance with the Paperwork Reduction Act of 1995 (44 U.S.C. 3501 *et seq.*). The sections that contain the new, revised, and current information collection requirements and the estimated time to fulfill each requirement are as follows:

CFR section	Respondent universe	Total annual responses	Average time per response	Total annual burden hours
229.47—Emergency Brake Valve—Marking brake pipe valve as such	32 railroads	32 markings	1 minute	1
238.7—Waivers	32 railroads	5 waivers	2 hours	10
238.15—Movement of passenger equipment with power brake defect	32 railroads	1,000 tags	3 minutes	50
—Movement of passenger equipment—defective en route	32 railroads	288 tags	3 minutes	14
—Conditional requirement—Notice	32 railroads	144 notices	3 minutes	7
238.17—Limitations on movement of passenger equipment—defects found at calendar day insp. & on movement of passenger equipment—develops defects en route.	32 railroads	200 tags	3 minutes	10
—Special requirements—movement of passenger equip. with safety appliance defect.	32 railroads	76 tags	3 minutes	4
—Crew member notifications	32 railroads	38 radio notifications	30 secs	.32
238.21—Petitions for special approval of alternative standards	32 railroads	1 petition	16 hours	16

[22] Lowe, M., Tokuoka, S., Dubay, K., and Gereffi, G., ''U.S. Manufacture of Rail Vehicles for Intercity Passenger Rail and Urban Transit: A Value Chain Analysis,'' Center on Globalization, Governance & Competitiveness, June 24, 2010.

CFR section	Respondent universe	Total annual responses	Average time per response	Total annual burden hours
—Petitions for special approval of pre-revenue service acceptance testing plan	32 railroads	1 petition	40 hours	40
—Comments on petitions	Public/RR Industry	4 comments	1 hour	4
238.103—Fire Safety:				
—Procuring new pass. equipment—Fire Safety Analysis	2 new railroads	1 analysis	150 hours	150
—Transferring existing equipment—Revised Fire Safety Analysis	32 railroads/APTA	3 analyses	20 hours	60
238.107—Inspection/testing/maintenance plans—RR review	32 railroads	32 reviews	60 hours	1,920
238.109—Employee/Contractor Tr.:				
—Training employees—Mech. insp	7,500 employees/100 trainers.	2,500 empl./100 trainers.	1.33 hours	3,458
—Recordkeeping—Employee/Contractor current qualifications	32 railroads	2,500 records	3 minutes	125
238.111—Pre-revenue service acceptance testing plan: Passenger equipment that has previously been used in service in the U.S.	9 equipment manufacturers.	1 plan	16 hours	16
—Passenger equipment that has not been previously used in revenue service in the U.S.	9 equipment manufacturers.	1 plan	192 hours	192
—Subsequent equipment orders	9 equipment manufacturers.	1 plan	60 hours	60
—Tier II & Tier III Passenger Equipment: Report of test results to FRA (Revised Requirement).	32 railroads	1 report	60 hours	60
—Plan submitted to FRA for Tier II or Tier III equipment before being placed in service (Revised Requirement).	32 railroads	1 plan	20 hours	20
238.131—Exterior side door safety systems—new passenger cars/locomotives used in passenger service: Failure Modes, Effects, Criticality Analysis (FMECA).	6 passenger car builders.	2 analyses	4 hours	8
238.133—Exterior side door safety systems—passenger cars/locomotives used in passenger service: Functional test plans.	32 railroads	32 plan updates	4 hours	128
—Notification to designated RR authority by train crewmember of unsealed door by-pass device.	32 railroads	9,994 radio notifications.	30 secs	84
—Safety briefing by train crew when door by-pass device is activated	32 railroads	320 safety briefings	2 minutes	11
—Notification to designated RR authority by train crewmember that door by-pass device has been activated.	32 railroads	320 radio notifications	30 secs	3
—On-site qualified person (QP) description to a qualified maintenance person (QMP) off-site that equipment is safe to move for repairs.	32 railroads	320 QP descriptions	5 minutes	27
—QP/QMP notification to crewmember in charge that door by-pass has been activated + safety briefing by train crew.	32 railroads	320 notices + 320 safety briefings.	30 seconds + 10 min.	56
—RR record of each door by-pass activation	32 railroads	320 records	2 minutes	11
—RR record of unintended power door openings	32 railroads	20 records	2 hours	40
—RR record of by-pass activations found unsealed	32 railroads	20 records	4 hours	80
238.135—RR request to FRA for special consideration to operate passenger trains with exterior side doors or trap doors, or both, open between stations.	32 railroads	2 requests	25 hours	50
—FRA request to RR for additional information concerning special consideration request.	32 railroads	1 additional document	12 hours	12
—RR Operating rule to override a door summary circuit or no motion system, or both, in the event of an en route exterior side door failure or malfunction on a passenger train.	32 railroads	10 operating rules	42 hours	420
—RR copy of written operating rules to train crew members and control center personnel.	32 railroads	10,000 op. rule copies	1 minute	167
—RR training of train crew members on requirements of this section	32 railroads	3,383 RR trained employees.	30 mins	1,692
—RR training of new employees	32 railroads	150 workers	30 mins	75
—RR operational/efficiency tests of train crew members & control center employees	32 railroads	3,383 tests	2 minutes	113
238.201—New Requirements—Alternative Compliance: Tier I Passenger equipment—Test plans + supporting documentation demonstrating compliance.	32 railroads	1 plan	40 hours	40
—Notice of tests sent to FRA 30 days prior to commencement of operations	32 railroads	1 notice	30 mins	1
238.229—Safety Appliances:				
—Welded safety appliances: Lists	32 railroads	32 lists	1 hour	32
—Defective welded safety appliance—Tags	32 railroads	4 tags	3 minutes	.20
—Notification to crewmembers about non-compliant equipment	32 railroads	2 notices	1 minute	.0333
—Inspection plans				
—Inspection personnel—Training	32 railroads	1 plan	16 hours	16
—Remedial action: Defect/crack in weld—record	32 railroads	60 workers	4 hours	240
	32 railroads	1 record	2.25 hours	2
—Petitions for special approval of alternative compliance—impractical equipment design.	32 railroads	1 petition	4 hours	4
—Records of inspection/repair of welded safety appliance brackets/supports/training	32 railroads	3,264 records	12 mins	653
238.230—Safety Appliances—New Equipment—Inspection record of welded equipment by qualified Employee.	32 railroads	100 records	6 minutes	10
—Welded safety appliances: Documentation for equipment impractically designed to mechanically fasten safety appliance support.	32 railroads	1 document	4 hours	4
238.231—Brake System—Inspection and repair of hand/parking brake: Records	32 railroads	2,500 forms	21 mins	875
—Procedures verifying hold of hand/parking brakes	32 railroads	1 procedure	2 hours	2
238.237—Automated monitoring:				
—Documentation for alerter/deadman control timing	32 railroads	1 document	2 hours	2
—Defective alerter/deadman control: Tagging	32 railroads	25 tags	3 minutes	1
238.303—Exterior calendar day mechanical inspection of passenger equipment: Notice of previous inspection.	32 railroads	32 notices	1 minute	1
—Dynamic brakes not in operating mode: Tag	32 railroads	50 tags	3 minutes	3
—Conventional locomotives equipped with inoperative dynamic brakes: Tagging	32 railroads	50 tags	3 minutes	3
—MU passenger equipment found with inoperative/ineffective air compressors at exterior calendar day inspection: Documents.	32 railroads	4 documents	2 hours	8
—Written notice to train crew about inoperative/ineffective air compressors	32 railroads	100 notices	3 minutes	5

CFR section	Respondent universe	Total annual responses	Average time per response	Total annual burden hours
—Records of inoperative air compressors	32 railroads	100 records	2 minutes	3
—Record of exterior calendar day mechanical inspection	32 railroads	1,959,620 records	10 minutes + 1 minute.	359,264
238.305—Interior calendar day mechanical inspection of passenger cars—Tagging of defective end/side doors.	32 railroads	540 tags	1 minute	9
—Records of interior calendar day inspection	32 railroads	1,959,620 records	5 minutes + 1 minute.	359,264
238.307—Periodic mechanical inspection of passenger cars and unpowered vehicles—Alternative inspection intervals: Notifications.	32 railroads	2 notices/notifications	5 hours	10
—Notice of seats/seat attachments broken or loose	32 railroads	200 notices	2 minutes	7
—Records of each periodic mechanical inspection	32 railroads	19,284 insp./records	200 hours/ 2 minutes.	3,857,443
—Detailed documentation of reliability assessments as basis for alternative inspection interval.	32 railroads	5 documents	100 hours	500
238.311—Single car test:				
—Tagging to indicate need for single car test	32 railroads	50 tags	3 minutes	3
238.313—Class I Brake Test:				
—Record for additional inspection for passenger equipment that does not comply with § 238.231(b)(1).	32 railroads	15,600 insp./records	30 minutes	7,800
238.315—Class IA brake test:				
—Notice to train crew that test has been performed (verbal notice)	32 railroads	18,250 notices	5 seconds	25
—Communicating signal tested and operating as intended	32 railroads	365,000 op. sufficiency tests.	15 seconds.	1,521
238.317—Class II brake test:				
—Communicating signal tested and operating as intended	32 railroads	365,000 op. sufficiency tests.	15 seconds.	1,521
238.321—Out-of-service credit—Passenger car: Out-of-use notation	32 railroads	1,250 notes	2 minutes	42
238.445—Automated Monitoring:				
—Performance monitoring: Alerters/alarms	1 railroad	10,000 alerts/alarms	10 secs	28
—Monitoring system: Self-test feature: Notifications	1 railroad	21,900 notices	20 secs	122
238.703—Quasi-static Load Requirements—Document/analysis for Tier III Trainsets showing compliance with this section (*New Requirement*).	2 railroads	1 analysis	40 hours	40
238.705—Dynamic Collision Scenario—Demonstration of Occupied Volume Integrity for Tier III Trainsets—Model validation document (*New Requirement*).	2 railroads	1 model validation/ analysis.	40 hours	40
238.707—Override Protection—Anti-climbing performance test/analysis for Tier III Trainsets (*New Requirement*).	2 railroads	1 test/analysis	40 hours	40
238.709—Fluid Entry Inhibition—Information to demonstrate compliance with this section—Tier III Trainsets (*New Requirement*).	2 railroads	1 compliance document/analysis.	20 hours	20
238.721—*New Requirements*—Tier III Trainsets—End-facing document/analysis for exterior windows of Tier III Trainsets.	5 glass manufacturers.	1 data document/analysis.	60 hours	60
—Marking of End-facing exterior windows Tier III Trainsets	5 glass manuf	60 markings	2 minutes	2
—Cab Glazing; Side-facing exterior windows in Tier III cab—document showing compliance with Type II glazing.	5 glass manuf	1 document analysis	10 hours	10
—Marking of side-facing exterior windows in Tier III Trainsets	5 glass manuf	120 window markings	2 minutes	4
—Non-Cab Glazing; Side-facing exterior windows—Tier III—compliance document for Type II glazing.	5 glass manuf	1 data document/analysis.	20 hours	20
—Marking of side-facing exterior windows—Tier III Trainsets—non-cab cars	5 glass manuf	1, 200 glass markings	2 minutes	40
—Alternative standard to FRA for side-facing exterior window intended to be breakable and serve as an emergency window exit (option to comply with an alternative standard).	5 glass manuf	1 alternative standard	5 hours	5
238.731—*New Requirements*—Brake Systems—RR analysis and testing Tier III trainsets' maximum safe operating speed.	2 railroads	1 analysis/test	480 hours	480
—Tier III trainsets' passenger brake alarm—legible stenciling/marking of devices with words ''Passenger Brake Alarm''.	2 railroads	240 stencils/markings	20 minutes	80
—Main reservoir test/certification	2 railroads	1 test/cert	6 hours	6
—Inspection, testing and maintenance plan (ITM)—Periodic inspection for main reservoirs.	2 railroads	1 ITM plan	480 hours	480
—Brake actuator design with approved brake cylinder pressure as part of design review process.	2 railroads	1 design	40 hours	40
—Tier III equipment: Demonstrated securement procedure	2 railroads	1 procedure	8 hours	8
238.733—Tier III Interior fixture attachment standard—analysis for FRA approval (*New Requirement*).	2 railroads	1 analysis/document	20 hours	20
238.735—Tier III seat crashworthiness standard (passenger & cab crew)—analysis for FRA approval (New Requirement).	2 railroads	1 analysis/document	40 hours	40
238.737—Tier III luggage racks standard—analysis for FRA approval (New Requirement).	2 railroads	1 analysis/document	20 hours	20
238.741—New Requirement—Emergency window egress/rescue plan to FRA for passenger cars in Tier III trainsets not in compliance with sections 238.113 or 238.114.	2 railroads	1 plan	60 hours	60
238.743—*New Requirement*—Emergency Lighting Std.—Tier III trainsets—analysis/test	2 railroads	1 analysis/test	60 hours	60
238.751—*New Requirements*—Alerters—alternate technology- Tier III trainsets—analysis/test.	2 railroads	1 analysis/test	40 hours	40

All estimates include the time for reviewing instructions; searching existing data sources; gathering or maintaining the needed data; and reviewing the information. For information or a copy of the information collection submission sent to OMB, please contact FRA Information Collection Clearance Officers Mr. Robert Brogan at (202) 493–6292 or Ms. Kimberly Toone at (202) 493–6132, or via email at the following addresses: *Robert.Brogan@dot.gov; Kimberly.Toone@dot.gov*.

Organizations and individuals desiring to submit comments on the collection of information requirements should direct them to the Office of Management and Budget, Office of Information and Regulatory Affairs, 725 17th St. NW, Washington, DC 20503, attn: FRA Desk Officer. Comments may also be sent via email to the Office of Management and Budget at the following address: *oira_submissions@omb.eop.gov*.

OMB is required to make a decision concerning the collection of information requirements contained in this final rule between 30 and 60 days after publication of this document in the **Federal Register**. Therefore, a comment to OMB is best assured of having its full effect if OMB receives it within 30 days of publication.

FRA cannot impose a penalty on persons for violating information collection requirements which do not display a current OMB control number, if required. FRA intends to obtain current OMB control numbers for any new information collection requirements resulting from this rulemaking action prior to the effective date of this final rule. The OMB control number, when assigned, will be announced by separate notice in the **Federal Register**.

D. Federalism Implications

Executive Order 13132, ''Federalism'' (64 FR 43255, Aug. 10, 1999), requires FRA to develop an accountable process to ensure ''meaningful and timely input by State and local officials in the development of regulatory policies that have federalism implications.'' ''Policies that have federalism implications'' are defined in the Executive Order to include regulations that have ''substantial direct effects on the States, on the relationship between the national government and the States, or on the distribution of power and responsibilities among the various levels of government.'' Under Executive Order 13132, the agency may not issue a regulation with federalism implications that imposes substantial direct compliance costs and that is not required by statute, unless the Federal government provides the funds necessary to pay the direct compliance costs incurred by State and local governments, or the agency consults with State and local government officials early in the process of developing the regulation. Where a regulation has federalism implications and preempts State law, the agency seeks to consult with State and local officials in the process of developing the regulation.

This final rule has been analyzed under the principles and criteria contained in Executive Order 13132. This final rule will not have a substantial effect on the States or their political subdivisions, and it will not affect the relationships between the Federal government and the States or their political subdivisions, or the distribution of power and responsibilities among the various levels of government. In addition, FRA has determined that this regulatory action will not impose substantial direct compliance costs on the States or their political subdivisions. Therefore, the consultation and funding requirements of Executive Order 13132 do not apply.

However, this final rule could have preemptive effect by operation of law under certain provisions of the Federal railroad safety statutes, specifically the former Federal Railroad Safety Act of 1970, repealed and recodified at 49 U.S.C. 20106, and the former Locomotive Boiler Inspection Act (LIA) at 45 U.S.C. 22–34, repealed and re-codified at 49 U.S.C. 20701–20703. Section 20106 provides that States may not adopt or continue in effect any law, regulation, or order related to railroad safety or security that covers the subject matter of a regulation prescribed or order issued by the Secretary of Transportation (with respect to railroad safety matters) or the Secretary of Homeland Security (with respect to railroad security matters), except when the State law, regulation, or order qualifies under the ''essentially local safety or security hazard'' exception to section 20106. Moreover, the former LIA has been interpreted by the Supreme Court as preempting the field concerning locomotive safety. *See Napier* v. *Atlantic Coast Line R.R.,* 272 U.S. 605 (1926).

E. International Trade Impact Assessment

The Trade Agreements Act of 1979 (Pub. L. 96–39, 19 U.S.C. 2501 *et seq.*) prohibits Federal agencies from engaging in any standards or related activities that create unnecessary obstacles to the foreign commerce of the United States. Legitimate domestic objectives, such as safety, are not considered unnecessary obstacles. The statute also requires consideration of international standards and, where appropriate, that they be the basis for U.S. standards.

FRA has assessed the potential effect of this rulemaking on foreign commerce and believes that its requirements are consistent with the Trade Agreements Act. The requirements are safety standards, which, as noted, are not considered unnecessary obstacles to trade. Moreover, FRA has sought, to the extent practicable, to state the requirements in terms of the performance desired, rather than in more narrow terms restricted to a particular design or system.

F. Environmental Impact

FRA has evaluated this final rule in accordance with the National Environmental Policy Act (NEPA; 42 U.S.C. 4321 *et seq.*), other environmental statutes, related regulatory requirements, and its ''Procedures for Considering Environmental Impacts'' (FRA's Procedures) (64 FR 28545, May 26, 1999). FRA has determined that this final rule is categorically excluded from detailed environmental review pursuant to section 4(c)(20) of FRA's Procedures, which concerns the promulgation of railroad safety rules and policy statements that do not result in significantly increased emissions of air or water pollutants or noise or increased traffic congestion in any mode of transportation. *See* 64 FR 28547, May 26, 1999. Categorical exclusions (CEs) are actions identified in an agency's NEPA implementing procedures that do not normally have a significant impact on the environment and therefore do not require either an environmental assessment (EA) or environmental impact statement (EIS). *See* 40 CFR 1508.4.

In analyzing the applicability of a CE, the agency must also consider whether extraordinary circumstances are present that would warrant a more detailed environmental review through the preparation of an EA or EIS. Id. In accordance with section 4(c) and (e) of FRA's Procedures, the agency has further concluded that no extraordinary circumstances exist with respect to this regulation that might trigger the need for a more detailed environmental review. The purpose of this rulemaking is to amend FRA's Passenger Equipment Safety Standards. This rulemaking adds safety standards to facilitate the safe implementation of high-speed rail at

speeds up to 220 mph (Tier III). The rule also establishes crashworthiness and occupant protection performance requirements in the alternative to those specified for passenger trainsets operated at speeds up to 125 mph (Tier I). In addition, the rule increases from 150 mph to 160 mph the maximum speed allowable for the tier of railroad passenger equipment currently operated at the Nation's highest train speeds (Tier II). FRA does not anticipate any environmental impacts from the requirements and finds that there are no extraordinary circumstances present in connection with this final rule.

G. Executive Order 12898 (Environmental Justice)

Executive Order 12898, ''Federal Actions to Address Environmental Justice in Minority Populations and Low-Income Populations,'' and DOT Order 5610.2(a) (91 FR 27534, May 10, 2012) require DOT agencies to achieve environmental justice as part of their mission by identifying and addressing, as appropriate, disproportionately high and adverse human health or environmental effects, including interrelated social and economic effects, of their programs, policies, and activities on minority populations and low-income populations. The DOT Order instructs DOT agencies to address compliance with Executive Order 12898 and requirements within the DOT Order in rulemaking activities, as appropriate. FRA has evaluated this rule under Executive Order 12898 and the DOT Order and has determined that it will not cause disproportionately high and adverse human health and environmental effects on minority populations or low-income populations.

H. Executive Order 13175 (Tribal Consultation)

FRA has evaluated this rule in accordance with the principles and criteria contained in Executive Order 13175, ''Consultation and Coordination with Indian Tribal Governments,'' dated November 6, 2000. This rule will not have a substantial direct effect on one or more Indian tribes, will not impose substantial direct compliance costs on Indian tribal governments, and will not preempt tribal laws. Therefore, the funding and consultation requirements of Executive Order 13175 do not apply, and a tribal summary impact statement is not required.

I. Unfunded Mandates Reform Act of 1995

Under section 201 of the Unfunded Mandates Reform Act of 1995 (Pub. L. 104–4, 2 U.S.C. 1531), each Federal agency ''shall, unless otherwise prohibited by law, assess the effects of Federal regulatory actions on State, local, and tribal governments, and the private sector (other than to the extent that such regulations incorporate requirements specifically set forth in law).'' Section 202 of the Act (2 U.S.C. 1532) further requires that ''before promulgating any general notice of proposed rulemaking that is likely to result in the promulgation of any rule that includes any Federal mandate that may result in expenditure by State, local, and tribal governments, in the aggregate, or by the private sector, of $100,000,000 or more (adjusted annually for inflation) in any 1 year, and before promulgating any final rule for which a general notice of proposed rulemaking was published, the agency shall prepare a written statement'' detailing the effect on State, local, and tribal governments and the private sector. This final rule will not result in the expenditure, in the aggregate, of $100,000,000 or more (as adjusted annually for inflation) in any one year, and thus preparation of such a statement is not required.

J. Energy Impact

Executive Order 13211, ''Actions Concerning Regulations That Significantly Affect Energy Supply, Distribution, or Use,'' requires Federal agencies to prepare a Statement of Energy Effects for any ''significant energy action.'' *See* 66 FR 28355, May 22, 2001. FRA has evaluated this final rule in accordance with Executive Order 13211 and determined that this regulatory action is not a ''significant energy action'' within the meaning of the Executive Order.

Executive Order 13783, ''Promoting Energy Independence and Economic Growth,'' requires Federal agencies to review regulations to determine whether they potentially burden the development or use of domestically produced energy resources, with particular attention to oil, natural gas, coal, and nuclear energy resources. *See* 82 FR 16093, March 31, 2017. FRA has determined this regulatory action will not burden the development or use of domestically produced energy resources.

K. Analysis Under 1 CFR Part 51

As required by 1 CFR 51.5, FRA has summarized the standards it is incorporating by reference and shown the reasonable availability of those standards in the section-by-section analysis of §§ 238.733, 238.735, 238.737, 238.743, and Appendix G, paragraphs (i) and (j) of this rulemaking document.

List of Subjects

49 CFR Parts 229, 231, and 236

Railroad safety.

49 CFR Part 238

Incorporation by reference, Passenger equipment, Railroad safety, Reporting and recordkeeping requirements.

The Rule

For the reasons discussed in the preamble, FRA amends parts 229, 231, 236, and 238 of chapter II, subtitle B of title 49, Code of Federal Regulations as follows:

PART 229—[AMENDED]

■ 1. The authority citation for part 229 continues to read as follows:

Authority: 49 U.S.C. 103, 322(a), 20103, 20107, 20901–02, 21301, 21302, 21311; 28 U.S.C. 2461, note; and 49 CFR 1.89.

Subpart A—General

■ 2. Revise § 229.3(c) to read as follows:

§ 229.3 Applicability.

* * * * *

(c) Paragraphs (a) and (b) of § 229.125 do not apply to Tier II passenger equipment as defined in § 238.5 of this chapter (*i.e.,* passenger equipment operating at speeds exceeding 125 mph but not exceeding 160 mph).

* * * * *

■ 3. Section 229.5 is amended by revising the definition of ''Tier II'' to read as follows:

§ 229.5 Definitions.

* * * * *

Tier II means operating at speeds exceeding 125 mph but not exceeding 160 mph.

* * * * *

PART 231—[AMENDED]

■ 4. The authority citation for part 231 continues to read as follows:

Authority: 49 U.S.C. 20102–20103, 20107, 20131, 20301–20303, 21301–21302, 21304; 28 U.S.C. 2461, note; and 49 CFR 1.89.

■ 5. Revise § 231.0(c) to read as follows:

§ 231.0 Applicability and penalties.

* * * * *

(c) Except for the provisions governing uncoupling devices, this part does not apply to Tier II passenger equipment as defined in § 238.5 of this chapter (*i.e.,* passenger equipment operating at speeds exceeding 125 mph but not exceeding 160 mph).

* * * * *

PART 236—[AMENDED]

■ 6. The authority citation for part 236 continues to read as follows:

Authority: 49 U.S.C. 20102–20103, 20107, 20133, 20141, 20157, 20301–20303, 20306, 20701–20703, 21301–21302, 21304; 28 U.S.C. 2461, note; and 49 CFR 1.89.

Subpart I—Positive Train Control Systems

§ 236.1007 [Amended]

■ 7. In § 236.1007, remove paragraph (d), and redesignate paragraph (e) as new paragraph (d).

PART 238—[AMENDED]

■ 8. The authority citation for part 238 continues to read as follows:

Authority: 49 U.S.C. 20103, 20107, 20133, 20141, 20302–20303, 20306, 20701–20702, 21301–21302, 21304; 28 U.S.C. 2461, note; and 49 CFR 1.89.

Subpart A—General

■ 9. Section 238.5 is amended by:
■ a. Adding in alphabetical order a definition of ''Associate Administrator'';
■ b. Revising the definitions of ''glazing, end-facing'', ''glazing, side-facing'', and ''Tier II'';
■ c. Adding in alphabetical order a definition of ''Tier III'';
■ d. Revising the definition of ''Train, Tier II passenger''; and
■ e. Adding in alphabetical order definitions of ''Trainset, Tier I alternative passenger'', ''Trainset, Tier III'', and ''Trainset unit''.

The additions and revisions read as follows:

§ 238.5 Definitions.

* * * * *

Associate Administrator means Associate Administrator for Railroad Safety and Chief Safety Officer, Associate Administrator for Railroad Safety, Associate Administrator for Safety.

* * * * *

Glazing, end-facing means any exterior glazing located where a line perpendicular to the plane of the glazing material makes a horizontal angle of 50 degrees or less with the centerline of the vehicle in which the glazing material is installed, except for: The coupled ends of multiple-unit (MU) locomotives or other equipment semi-permanently connected to each other in a train consist; and end doors of passenger cars at locations other than the cab end of a cab car or MU locomotive. Any location which, due to curvature of the glazing material, can meet the criteria for either an end-facing glazing location or a side-facing glazing location shall be considered an end-facing glazing location.

* * * * *

Glazing, side-facing means any glazing located where a line perpendicular to the plane of the glazing material makes a horizontal angle of more than 50 degrees with the centerline of the vehicle in which the glazing material is installed. Side-facing glazing also means glazing located at the coupled ends of MU locomotives or other equipment semi-permanently connected to each other in a train consist and glazing located at end doors other than at the cab end of a cab car or MU locomotive.

* * * * *

Tier II means operating at speeds exceeding 125 mph but not exceeding 160 mph.

Tier III means operating in a shared right-of-way at speeds not exceeding 125 mph and in an exclusive right-of-way without grade crossings at speeds exceeding 125 mph but not exceeding 220 mph.

* * * * *

Train, Tier II passenger means a short-distance or long-distance intercity passenger train providing service at speeds exceeding 125 mph but not exceeding 160 mph.

* * * * *

Trainset, Tier I alternative passenger means a trainset consisting of Tier I passenger equipment demonstrating alternative crashworthiness and occupant protection performance under the requirements of appendix G to this part.

Trainset, Tier III means an intercity passenger train that provides service in a shared right-of-way at speeds not exceeding 125 mph and in an exclusive right-of-way without grade crossings at speeds exceeding 125 mph but not exceeding 220 mph.

Trainset unit means a trainset segment located between connecting arrangements (articulations).

* * * * *

■ 10. In § 238.21 revise paragraphs (c)(2) and (d)(2) to read as follows:

§ 238.21 Special approval procedure.

* * * * *

(c) * * *

(2) The elements prescribed in §§ 238.201(b)(1), 238.229(j)(2), and 238.230(d); and

* * * * *

(d) * * *

(2) Each petition for special approval of the pre-revenue service acceptance testing plan shall be submitted to the Associate Administrator, Federal Railroad Administration, 1200 New Jersey Avenue SE, Washington, DC 20590.

* * * * *

Subpart B—Safety Planning and General Requirements

■ 11. In § 238.111 revise paragraphs (b)(2), (4), (5), and (7), and (c) to read as follows:

§ 238.111 Pre-revenue service acceptance testing plan.

* * * * *

(b) * * *

(2) Submit a copy of the plan to FRA at least 30 days before testing the equipment and include with that submission notification of the times and places of the pre-revenue service tests to permit FRA observation of such tests. For Tier II and Tier III passenger equipment, the railroad shall obtain FRA approval of the plan under the procedures specified in § 238.21.

* * * * *

(4) Document in writing the results of the tests. For Tier II and Tier III passenger equipment, the railroad shall report the results of the tests to the Associate Administrator at least 90 days prior to its intended operation of the equipment in revenue service.

(5) Correct any safety deficiencies identified in the design of the equipment or in the ITM procedures uncovered during testing. If safety deficiencies cannot be corrected by design changes, the railroad shall impose operational limitations on the revenue service operation of the equipment designed to ensure the equipment can operate safely. For Tier II and Tier III passenger equipment, the railroad shall comply with any operational limitations the Associate Administrator imposes on the revenue service operation of the equipment for cause stated following FRA review of the results of the test program. This section does not restrict a railroad from petitioning FRA for a waiver of a safety regulation under the procedures specified in part 211 of this chapter.

* * * * *

(7) For Tier II or Tier III passenger equipment, obtain approval from the Associate Administrator before placing the equipment in revenue service. The Associate Administrator will grant such approval if the railroad demonstrates compliance with the applicable requirements of this part.

(c) If a railroad plans a major upgrade or introduction of new technology to Tier II or Tier III passenger equipment that has been used in revenue service in

the United States and that affects a safety system on such equipment, the railroad shall follow the procedures in paragraph (b) of this section before placing the equipment in revenue service with the major upgrade or introduction of new technology.

Subpart C—Specific Requirements for Tier I Passenger Equipment

■ 12. In § 238.201, redesignate the text after the heading of paragraph (b) as paragraph (b)(1), revise the first sentence of newly redesignated paragraph (b)(1), and add paragraph (b)(2) to read as follows:

§ 238.201 Scope/alternative compliance.

* * * * *

(b) * * * (1) Passenger equipment of special design shall be deemed to comply with this subpart, other than § 238.203, for the service environment the petitioner proposes to operate the equipment in if the Associate Administrator determines under paragraph (c) of this section that the equipment provides at least an equivalent level of safety in such environment for the protection of its occupants from serious injury in the case of a derailment or collision. * * *

(2)(i) Tier I passenger trainsets may comply with the alternative crashworthiness and occupant protection requirements in appendix G to this part instead of the requirements in §§ 238.203, 238.205, 238.207, 238.209(a), 238.211, 238.213, and 238.219.

(ii) To assess compliance with the alternative requirements, the railroad shall submit the following documents to the Associate Administrator, for review:

(A) Test plans, and supporting documentation for all tests intended to demonstrate compliance with the alternative requirements and to validate any computer modeling and analysis used, including notice of such tests, 30 days before commencing the tests; and

(B) A carbody crashworthiness and occupant protection compliance report based on the analysis, calculations, and test data necessary to demonstrate compliance.

(iii) The carbody crashworthiness and occupant protection compliance report shall be deemed acceptable unless the Associate Administrator stays action by written notice to the railroad within 60 days after receipt of the report.

(A) If the Associate Administrator stays action, the railroad shall correct any deficiencies FRA identified and notify FRA it has corrected the deficiencies before placing the subject equipment into service.

(B) FRA may also impose written conditions necessary for safely operating the equipment, for cause stated.

* * * * *

■ 13. Revise § 238.203(a)(1) to read as follows:

§ 238.203 Static end strength.

(a)(1) Except as further specified in this paragraph (a), paragraph (d) of this section, and § 238.201(b)(2), on or after November 8, 1999, all passenger equipment shall resist a minimum static end load of 800,000 pounds applied on the line of draft without permanent deformation of the body structure.

* * * * *

■ 14. Revise the first sentence of § 238.205(a) to read as follows:

§ 238.205 Anti-climbing mechanism.

(a) Except as provided in paragraph (b) of this section, and § 238.201(b), all passenger equipment placed in service for the first time on or after September 8, 2000, and prior to March 9, 2010, shall have at both the forward and rear ends an anti-climbing mechanism capable of resisting an upward or downward vertical force of 100,000 pounds without failure. * * *

* * * * *

■ 15. Revise § 238.207 to read as follows:

§ 238.207 Link between coupling mechanism and carbody.

Except as specified in § 238.201(b), all passenger equipment placed in service for the first time on or after September 8, 2000, shall have a coupler carrier at each end designed to resist a vertical downward thrust from the coupler shank of 100,000 pounds for any normal horizontal position of the coupler, without permanent deformation. Passenger equipment connected by articulated joints that complies with the requirements of § 238.205(a) also complies with the requirements of this section.

■ 16. Amend § 238.209 by adding paragraph (a) introductory text to read as follows:

§ 238.209 Forward end structure of locomotives, including cab cars and MU locomotives.

(a) Except as specified in § 238.201(b)—

* * * * *

■ 17. Revise § 238.211(a) introductory text to read as follows:

§ 238.211 Collision posts.

(a) Except as further specified in this paragraph (a), paragraphs (b) through (d) of this section, § 238.201(b), and § 238.209(b)—

* * * * *

■ 18. Revise § 238.213(a)(1) to read as follows:

§ 238.213 Corner posts.

(a)(1) Except as further specified in paragraphs (b) and (c) of this section, § 238.201(b), and § 238.209(b), each passenger car shall have at each end of the car, placed ahead of the occupied volume, two full-height corner posts, each capable of resisting together with its supporting car body structure:

* * * * *

■ 19. Revise the first sentence of § 238.219 to read as follows:

§ 238.219 Truck-to-car-body attachment.

Except as provided in § 238.201(b), passenger equipment shall have a truck-to-carbody attachment with an ultimate strength sufficient to resist without failure the following individually applied loads: 2g vertically on the mass of the truck; and 250,000 pounds in any horizontal direction on the truck, along with the resulting vertical reaction to this load. * * *

Subpart E—Specific Requirements for Tier II Passenger Equipment

■ 20. Revise the first sentence of § 238.401 to read as follows:

§ 238.401 Scope.

This subpart contains specific requirements for railroad passenger equipment operating at speeds exceeding 125 mph but not exceeding 160 mph. * * *

Subpart F—Inspection, Testing, and Maintenance Requirements for Tier II Passenger Equipment

■ 21. Revise § 238.501 to read as follows:

§ 238.501 Scope.

This subpart contains inspection, testing, and maintenance requirements for railroad passenger equipment that operates at speeds exceeding 125 mph but not exceeding 160 mph.

■ 22. Add subpart H to part 238 to read as follows:

Subpart H—Specific Requirements for Tier III Passenger Equipment

Sec.
238.701 Scope.
238.702 Definitions.

Trainset Structure

238.703 Quasi-static compression load requirements.
238.705 Dynamic collision scenario.
238.707 Override protection.

238.709 Fluid entry inhibition.
238.711 End structure integrity of cab end.
238.713 End structure integrity of non-cab end.
238.715 Roof and side structure integrity.
238.717 Truck-to-carbody attachment.

Glazing

238.721 Glazing.

Brake System

238.731 Brake system.

Interior Fittings and Surfaces

238.733 Interior fixture attachment.
238.735 Seat crashworthiness (passenger and cab crew).
238.737 Luggage racks.

Emergency Systems

238.741 Emergency window egress and rescue access.
238.743 Emergency lighting.

Cab Equipment

238.751 Alerters.
238.753 Sanders.
Figure 1 to Subpart H of Part 238—Cylindrical Projectile for Use in § 238.721 End-Facing Cab-Glazing Testing

Subpart H—Specific Requirements for Tier III Passenger Equipment

§ 238.701 Scope.

This subpart contains specific requirements for railroad passenger equipment operating in a shared right-of-way at speeds not exceeding 125 mph and in an exclusive right-of-way without grade crossings at speeds exceeding 125 mph but not exceeding 220 mph. Passenger seating is permitted in the leading unit of a Tier III trainset if the trainset complies with the crashworthiness and occupant protection requirements of this subpart, and the railroad has an approved right-of-way plan under § 213.361 of this chapter and an approved HSR–125 plan under § 236.1007(c) of this chapter. Demonstration of compliance with the requirements of this subpart is subject to FRA review and approval under § 238.111.

§ 238.702 Definitions.

As used in this subpart—

Cab means a compartment or space within a trainset that is designed to be occupied by an engineer and contain an operating console for exercising control over the trainset.

Integrated trainset means a passenger train in which all units of the trainset are designed to operate together to achieve the trainset's structural crashworthiness performance.

Trainset Structure

§ 238.703 Quasi-static compression load requirements.

(a) *General.* To demonstrate resistance to loss of occupied volume, Tier III trainsets shall comply with both the quasi-static compression load requirements in paragraph (b) of this section and the dynamic collision requirements in § 238.705.

(b) *Quasi-static compression load requirements.* (1) Each individual vehicle in a Tier III trainset shall resist a minimum quasi-static end load applied on the collision load path of:

(i) 800,000 pounds without permanent deformation of the occupied volume; or

(ii) 1,000,000 pounds without exceeding either of the following two conditions:

(A) Local plastic strains no greater than 5 percent; and

(B) Vehicle shortening no greater than 1 percent over any 15-foot length of the occupied volume; or

(iii) 1,200,000 pounds without crippling the body structure. Crippling of the body structure is defined as reaching the maximum point on the load-versus-displacement characteristic.

(2) To demonstrate compliance with this section, each type of vehicle shall be subjected to an end compression load (buff) test with an end load magnitude no less than 337,000 lbf (1500 kN).

(3) Compliance with the requirements of paragraph (b) of this section shall be documented and submitted to FRA for review and approval.

§ 238.705 Dynamic collision scenario.

(a) *General.* In addition to the requirements of § 238.703, occupied volume integrity (OVI) shall also be demonstrated for each individual vehicle in a Tier III trainset through an evaluation of a dynamic collision scenario in which a moving train impacts a standing train under the following conditions:

(1) The initially-moving trainset is made up of the equipment undergoing evaluation at its AW0 ready-to-run weight;

(2) If trainsets of varying consist lengths are intended for use in service, then the shortest and longest consist lengths shall be evaluated;

(3) If the initially-moving trainset is intended for use in push-pull service, then, as applicable, each configuration of leading vehicle shall be evaluated separately;

(4) The initially-standing train is led by a rigid locomotive and also made up of five identical passenger coaches having the following characteristics:

(i) The rigid locomotive weighs 260,000 pounds and each coach weighs 95,000 pounds;

(ii) The rigid locomotive and each passenger coach crush in response to applied force as specified in Table 1 to this section; and

(iii) The rigid locomotive shall be modeled using the data inputs listed in appendix H to this part so that it has a geometric design as depicted in Figure 1 to appendix H to this part;

(5) The scenario shall be evaluated on tangent, level track;

(6) The initially-moving trainset shall have an initial velocity of 20 mph if it is an integrated trainset, or an initial velocity of 25 mph if the lead vehicle of the trainset is not part of the integrated design;

(7) The coupler knuckles on the colliding equipment shall be closed and centered;

(8) The initially-moving trainset and initially-standing train consists are not braked;

(9) The initially-standing train has only one degree-of-freedom (longitudinal displacement); and

(10) The model used to demonstrate compliance with the dynamic collision requirements must be validated. Model validation shall be documented and submitted to FRA for review and approval.

(b) *Dynamic collision requirements.* As a result of the impact described in paragraph (a) of this section—

(1) One of the following two conditions must be met for the occupied volume of the initially-moving trainset:

(i) There shall be no more than 10 inches of longitudinal permanent deformation; or

(ii) Global vehicle shortening shall not exceed 1 percent over any 15-foot length of occupied volume.

(2) If Railway Group Standard GM/RT2100, Issue Four, ''Requirements for Rail Vehicle Structures,'' Rail Safety and Standards Board Ltd., December 2010, is used to demonstrate compliance with any of the requirements in §§ 238.733, 238.735, 238.737, or 238.743, then the average longitudinal deceleration of the center of gravity (CG) of each vehicle in the initially-moving trainset during the dynamic collision scenario shall not exceed 5g during any 100-millisecond (ms) time period. The maximum interval between data points so averaged in the 100-ms time period shall be no greater than 1-ms.

(3) Compliance with each of the following conditions shall also be demonstrated for the cab of the initially-moving trainset after the impact:

(i) For each seat provided for an employee in the cab, and any floor-

mounted seat in the cab, a survival space shall be maintained where there is no intrusion for a minimum of 12 inches from each edge of the seat. Walls or other items originally within this defined space, not including the operating console, shall not further intrude more than 1.5 inches towards the seat under evaluation;

(ii) There shall be a clear exit path for the occupants of the cab;

(iii) The vertical height of the cab (floor to ceiling) shall not be reduced by more than 20 percent; and

(iv) The operating console shall not have moved more than 2 inches closer to the engineer's seat; if the engineer's seat is part of a set of adjacent seats, the requirements of this paragraph (b)(3) apply to both seats.

TABLE 1—FORCE-VERSUS-CRUSH RELATIONSHIPS FOR PASSENGER COACH AND CONVENTIONAL LOCOMOTIVE

Vehicle	Crush (in)	Force (lbf)
Passenger Coach	0	0
	3	80,000
	6	2,500,000
Conventional Locomotive	0	0
	2.5	100,000
	5	2,500,000

§ 238.707 Override protection.

(a) *Colliding equipment.* (1) Using the dynamic collision scenario described in § 238.705(a), anti-climbing performance shall be evaluated for each of the following sets of initial conditions:

(i) All vehicles in the initially-moving trainset and initially-standing train consists are positioned at their nominal running heights;

(ii) The lead vehicle of the initially-moving trainset shall be perturbed laterally and vertically upwards by 3 inches at the colliding interface; and

(iii) The lead vehicle of the initially-moving trainset shall be perturbed laterally and vertically downwards by 3 inches at the colliding interface.

(2) For each set of initial conditions specified in paragraph (a)(1) of this section, compliance with the following conditions shall be demonstrated after a dynamic impact:

(i) The relative difference in elevation between the underframes of the colliding equipment in the initially-moving trainset and initially-standing train consists shall not change by more than 4 inches; and

(ii) The tread of any wheel of the first vehicle of the initially-moving trainset shall not rise above the top of the rail by more than 4 inches

(b) *Connected equipment override.* (1) Using the dynamic collision scenario described in § 238.705(a), anti-climbing performance shall be evaluated for each of the following sets of initial conditions:

(i) All vehicles in the initially-moving trainset and initially-standing train consists are positioned at their nominal running heights;

(ii) One vehicle is perturbed laterally and vertically upwards by 2 inches, relative to the adjacent vehicle, at the first vehicle-to-vehicle interface in the initially-moving trainset; and,

(iii) One vehicle is perturbed laterally and vertically downwards by 2 inches, relative to the adjacent vehicle, at the first vehicle-to-vehicle interface in the initially-moving trainset.

(2) For each set of initial conditions specified in paragraph (b)(1) of this section, compliance with the following conditions shall be demonstrated after a dynamic impact:

(i) The relative difference in elevation between the underframes of the connected equipment in the initially-moving trainset shall not change by more than 4 inches; and

(ii) The tread of any wheel of the initially-moving trainset shall not rise above the top of rail by more than 4 inches.

§ 238.709 Fluid entry inhibition.

(a) The skin covering the forward-facing end of a Tier III trainset shall be—

(1) Equivalent to a ½-inch steel plate with yield strength of 25,000 pounds per square inch. Material of higher yield strength may be used to decrease the required thickness of the material provided at least an equivalent level of strength is maintained. The sum of the thicknesses of elements (*e.g.,* skin and structural elements) from the structural leading edge of the trainset to a point, when projected onto a vertical plane, just forward of the engineer's normal operating position, may also be used to satisfy this requirement;

(2) Designed to inhibit the entry of fluids into the cab; and

(3) Affixed to the collision posts or other main structural members of the forward end structure so as to add to the strength of the end structure.

(b) Information used to demonstrate compliance with the requirements of this section shall at a minimum include a list and drawings of the structural elements considered in satisfying the thickness-strength requirement of this section, and calculations showing that the thickness-strength requirement is satisfied.

§ 238.711 End structure integrity of cab end.

The cab ends of Tier III trainsets shall comply with the requirements of appendix F to this part to demonstrate the integrity of the end structure. For those units of Tier III trainsets without identifiable corner or collision posts, the requirements of appendix F to this part apply to the end structure at each location specified, regardless of whether the structure is a post.

§ 238.713 End structure integrity of non-cab end.

(a) *General.* Tier III trainsets shall comply with the requirements in paragraphs (b) and (c) of this section to demonstrate the integrity of the end structure for other than the cab ends.

(b) *Collision post requirements.* (1) Each unit of a Tier III trainset shall have at each non-cab end of the unit either:

(i) Two full-height collision posts, located at approximately the one-third points laterally. Each collision post shall have an ultimate longitudinal shear strength of not less than 300,000 pounds at a point even with the top of the underframe member to which it is attached. If reinforcement is used to provide the shear value, the reinforcement shall have full value for a distance of 18 inches up from the underframe connection and then taper to a point approximately 30 inches above the underframe connection; or

(ii) An equivalent end structure that can withstand the sum of forces that each collision post in paragraph (b)(1)(i) of this section is required to withstand. For analysis purposes, the required forces may be assumed to be evenly distributed at the locations where the equivalent structure attaches to the underframe.

(2) Collision posts are not required for the non-cab ends of any unit with push-back couplers and interlocking anti-climbing mechanisms in a Tier III trainset, or the non-cab ends of a semi-permanently coupled consist of trainset units, if the inter-car connection is capable of preventing disengagement and telescoping to the same extent as equipment satisfying the anti-climbing and collision post requirements in subpart C of this part. For demonstrating that the inter-car connection is capable of preventing such disengagement (and telescoping), the criteria in § 238.707(b) apply.

(c) *Corner post requirements.* (1) Each passenger car in a Tier III trainset shall have at each non-cab end of the car, placed ahead of the occupied volume, two side structures capable of resisting a:

(i) 150,000-pound horizontal force applied at floor height without failure;

(ii) 20,000-pound horizontal force applied at roof height without failure; and

(iii) 30,000-pound horizontal force applied at a point 18 inches above the top of the floor without permanent deformation.

(2) For purposes of this paragraph (c), the orientation of the applied horizontal forces shall range from longitudinal inward to transverse inward.

(3) For each evaluation load, the load shall be applied to an area of the structure sufficient to not locally cripple or punch through the material.

(4) The load area shall be chosen to be appropriate for the particular car design and shall not exceed 10 inches by 10 inches.

§ 238.715 Roof and side structure integrity.

To demonstrate roof and side structure integrity, Tier III trainsets shall comply with the requirements in §§ 238.215 and 238.217.

§ 238.717 Truck-to-carbody attachment.

To demonstrate the integrity of truck-to-carbody attachments, each unit in a Tier III trainset shall:

(a) Comply with the requirements in § 238.219; or

(b) Have a truck-to-carbody attachment with strength sufficient to resist, without yielding, the following individually applied, quasi-static loads on the mass of the truck at its CG:

(1) 3g vertically downward;

(2) 1g laterally, along with the resulting vertical reaction to this load; and

(3) Except as provided in paragraph (c) of this section, 5g longitudinally, along with the resulting vertical reaction to this load, provided that for the conditions in the dynamic collision scenario described in § 238.705(a):

(i) The average longitudinal deceleration at the CG of the equipment during the impact does not exceed 5g; and

(ii) The peak longitudinal deceleration of the truck during the impact does not exceed 10g.

(c) As an alternative to demonstrating compliance with paragraph (b)(3) of this section, the truck shall be shown to remain attached after a dynamic impact under the conditions in the collision scenario described in § 238.705(a).

(d) For purposes of paragraph (b) of this section, the mass of the truck includes axles, wheels, bearings, truck-mounted brake system, suspension system components, and any other component attached to the truck by design.

(e) Truck attachment shall be demonstrated using a validated model.

Glazing

§ 238.721 Glazing.

(a) *Cab glazing; end-facing.* (1) Each end-facing exterior window in a cab of a Tier III trainset shall comply with the requirements for Type I glazing in appendix A to part 223 of this chapter, except as provided in paragraphs (a)(2) through (4) of this section.

(2) Instead of the large object impact test specified in appendix A to part 223, each end-facing exterior window in a cab shall demonstrate compliance with the following requirements of this paragraph (a):

(i) The glazing article shall be impacted with a cylindrical projectile that complies with the following design specifications as depicted in Figure 1 to this subpart:

(A) The projectile shall be constructed of aluminum alloy such as ISO 6362–2:1990, grade 2017A, or its demonstrated equivalent;

(B) The projectile end cap shall be made of steel;

(C) The projectile assembly shall weigh 2.2 pounds (−0, +0.044 pounds) or 1 kilogram (kg) (−0, +0.020 kg) and shall have a hemispherical tip. Material may be removed from the interior of the aluminum portion to adjust the projectile mass according to the prescribed tolerance. The hemispherical tip shall have a milled surface with 0.04 inch (1 mm) grooves; and

(D) The projectile shall have an overall diameter of 3.7 inches (94 mm) with a nominal internal diameter of 2.76 inches (70 mm).

(ii) The test of the glazing article shall be deemed satisfactory if the test projectile does not penetrate the windscreen, the windscreen remains in its frame, and the witness plate is not marked by spall.

(iii) A new projectile shall be used for each test.

(iv) The glazing article to be tested shall be that which has the smallest area for each design type. For the test, the glazing article shall be fixed in a frame of the same construction as that mounted on the vehicle.

(v) A minimum of four tests shall be conducted and all must be deemed satisfactory. Two tests shall be conducted with the complete glazing article at 32 °F ± 9 °F (0 °C ± 5 °C) and two tests shall be conducted with the complete glazing article at 68 °F ± 9 °F (20 °C ± 5 °C). For the tests to be valid they shall demonstrate that the core temperature of the complete glazing article during each test is within the required temperature range.

(vi) The test glazing article shall be mounted at the same angle relative to the projectile path as it will be to the direction of travel when mounted on the vehicle.

(vii) The projectile's impact velocity shall equal the maximum operating speed of the Tier III trainset plus 100 mph (160 km/h). The projectile velocity shall be measured within 13 feet (4 m) of the point of impact.

(viii) The point of impact shall be at the geometrical center of the glazing article.

(3) Representative samples for large object impact testing of large Tier III end-facing cab glazing articles may be used instead of the actual design size, provided that the following conditions are met:

(i) Testing of glazing articles having dimensions greater than 39.4 by 27.6 inches (1,000 mm by 700 mm), excluding framing, may be performed using a flat sample having the same composition as the glazing article for which compliance is to be demonstrated. The glazing manufacturer shall provide documentation containing its technical justification that testing a flat sample is sufficient to verify compliance of the glazing article with the requirements of this paragraph (a).

(ii) Flat sample testing is permitted only when no surface of the full-size glazing article contains curvature with a radius less than 98 inches (2,500 mm), and when a complete, finished glazing article is laid (convex side uppermost) on a flat horizontal surface, the distance (measured perpendicularly to the flat surface) between the flat surface and the inside face of the glazing article is not greater than 8 inches (200 mm).

(4) End-facing glazing shall demonstrate sufficient resistance to spalling, as verified by the large impact projectile test under the following conditions:

(i) An annealed aluminum witness plate of maximum thickness 0.006 inch (0.15 mm) and of dimension 19.7 by 19.7 inches (500 mm by 500 mm) is placed vertically behind the sample under test, at a horizontal distance of 500 mm from the point of impact in the direction of travel of the projectile or the distance between the point of impact of the projectile and the location of the engineer's eyes in the engineer's normal operating position, whichever is less. The center of the witness plate is aligned with the point of impact.

(ii) Spalling performance shall be deemed satisfactory if the aluminum witness plate is not marked.

(iii) For the purposes of this subpart, materials used specifically to protect the cab occupants from spall (*i.e.,* spall

shields) shall not be required to meet the flammability and smoke emission performance requirements of appendix B to this part.

(5) Each end-facing exterior window in a cab shall, at a minimum, provide ballistic penetration resistance that meets the requirements of appendix A to part 223.

(6) Each end-facing exterior window in a cab shall be permanently marked, before installation, in such a manner that the marking is clearly visible after the material has been installed. The marking shall include:

(i) The words ''FRA TYPE IHS'' to indicate that the material has successfully passed the testing requirements specified in this paragraph (a);

(ii) The name of the manufacturer; and

(iii) The type or brand identification of the material.

(b) *Cab glazing; side-facing.* Each side-facing exterior window in a cab of a Tier III trainset shall—

(1) Comply with the requirements for Type II glazing contained in appendix A to part 223 of this chapter, for large-object impact; and

(2) Maintain the minimum ballistics penetration resistance as required for end-facing glazing in paragraph (a)(5) of this section.

(c) *Non-cab glazing; side-facing.* (1) Except as provided in paragraph (c)(2) of this section, each side-facing exterior window in other than a cab shall comply with the requirements for Type II glazing contained in appendix A to part 223 of this chapter.

(2) Instead of the requirements specified in paragraph (c)(1) of this section, a side-facing exterior window intended to be breakable and serve as an emergency window exit may comply with an alternative standard that provides an equivalent level of safety and is approved for use by FRA.

(d) *Glazing securement.* Each exterior window shall remain in place when subjected to:

(1) The forces due to air pressure differences caused when two trains pass at the minimum separation for two adjacent tracks, while traveling in opposite directions, each train traveling at the maximum authorized speed; and

(2) The impact forces that the exterior window is required to resist as specified in this section.

(e) *Glazing certification.* (1) Each manufacturer that provides glazing materials, intended by the manufacturer for use in achieving compliance with the requirements of this section, shall certify that each type of glazing material being supplied for this purpose has been successfully tested. Tests performed on glazing materials for demonstration of compliance with this section, relied on by the glazing manufacturer in furtherance of certification, may be performed by either:

(i) An independent third-party (laboratory, facility, underwriter); or

(ii) The glazing manufacturer, by providing FRA the opportunity to witness all tests by written notice at least 30 days prior to testing.

(2) Any glazing material certified to meet the requirements of this section shall be re-certified by the same means (as originally certified) if any changes are made to the glazing that may affect its mechanical properties or its mounting arrangement on the vehicle.

(3) All certification/re-certification documentation shall be made available to FRA upon request.

Brake System

§ 238.731 Brake system.

(a) *General.* Each railroad shall demonstrate through analysis and testing the maximum safe operating speed for its Tier III trainsets that results in no thermal damage to equipment or infrastructure during normal operation of the brake system.

(b) *Minimum performance requirement for brake system.* Each Tier III trainset's brake system shall be capable of stopping the trainset from its maximum operating speed within the signal spacing existing on the track over which the trainset is operating under the worst-case adhesion conditions defined by the railroad, as approved by FRA.

(c) *Emergency brake system.* A Tier III trainset shall be provided with an emergency brake application feature that produces an irretrievable stop. An emergency brake application shall be available at any time, and shall be initiated by either of the following:

(1) An unintentional parting of the trainset; or

(2) The train crew at locations within the trainset specified by the railroad, as approved by FRA.

(d) *Passenger brake alarm.* (1) A means to initiate a passenger brake alarm shall be provided at two locations in each unit of a Tier III trainset that is over 45 feet in length. When a unit of the trainset is 45 feet or less in length, a means to initiate a passenger brake alarm need only be provided at one location in the unit. These locations shall be identified by the railroad as approved by FRA. The words ''Passenger Brake Alarm'' shall be legibly stenciled or marked on each device or on an adjacent badge plate.

(2) All passenger brake alarms shall be installed so as to prevent accidental activation.

(3) During departure from the boarding platform, activation of the passenger brake alarm shall result in an emergency brake application.

(4) A passenger brake alarm activation that occurs after the trainset has safely cleared the boarding platform shall be acknowledged by the engineer within the time period specified by the railroad, as approved by FRA, for train operation to remain under the full control of the engineer. The method used to confirm that the trainset has safely cleared the boarding platform shall be defined by the railroad as approved by FRA.

(5) If the engineer does not acknowledge the passenger brake alarm as specified in paragraph (d)(4) of this section, at a minimum, a retrievable full service brake application shall be automatically initiated until the trainset has stopped unless the engineer intervenes as described in paragraph (d)(6) of this section.

(6) To retrieve the full service brake application described in paragraph (d)(5) of this section, the engineer must acknowledge the passenger brake alarm and activate appropriate controls to issue a command for brake application as specified by the railroad, as approved by FRA.

(e) *Degraded performance of blended brake system.* The following requirements of this paragraph (e) apply to operation of Tier III trainsets with blended braking systems, to address degraded brake system performance:

(1) Loss of power or failure of the dynamic or regenerative brake shall not result in exceeding the allowable stopping distance defined by the railroad as approved by FRA;

(2) The available friction braking shall be adequate to stop the trainset safely under the operating conditions defined by the railroad, as approved by FRA;

(3) The operational status of the trainset brake system shall be displayed for the engineer in the operating cab; and

(4) The railroad shall demonstrate through analysis and testing the maximum speed for safely operating its Tier III trainsets using only the friction brake portion of the blended brake with no thermal damage to equipment or infrastructure. The analysis and testing shall also be used to determine the maximum safe operating speed for various percentages of operative friction brakes and shall be included in the railroad's ITM program.

(f) *Main reservoir system.* (1) The main reservoirs in a Tier III trainset

shall be designed and tested to meet the requirements of a recognized standard specified by the railroad as approved by FRA, such as the American Society of Mechanical Engineers (ASME) Boiler and Pressure Vessel Code for Unfired Pressure Vessel Section VIII, Division I (ASME Code). The working pressure shall be 150 psig (10.3 bar) and the corresponding rated temperature shall be 150 °F (65 °C) unless otherwise defined by the railroad as approved by FRA. Reservoirs shall be certified based on their size and volume requirements.

(2) Each welded steel main reservoir shall be drilled in accordance with the requirements of a recognized standard specified by the railroad as approved by FRA, such as paragraph UG–25(e) of Section VIII of the ASME Boiler and Pressure Vessel Code. With the drain opening located at the low point of the reservoir, one row of holes shall be drilled lengthwise on the reservoir on a line intersecting the drain opening and sloped to the drain opening.

(3) A breach of a welded steel main reservoir at any of the drilled holes described in paragraph (f)(2) of this section shall be cause for the reservoir to be condemned and withdrawn from service. Any type of welded repair to a steel main reservoir is prohibited.

(g) *Aluminum main reservoirs.* (1) Aluminum main reservoirs used in a Tier III trainset shall conform to the requirements of § 229.51 of this chapter.

(2) Any type of welded repair to an aluminum main reservoir is prohibited.

(h) *Main reservoir tests.* Prior to initial installation, each main reservoir shall be subjected to a pneumatic or hydrostatic pressure test based on the maximum working pressure defined in paragraph (f) or (g) of this section, as appropriate, unless otherwise established by the railroad's ITM program. Records of the test date, location, and pressure shall be maintained by the railroad for the life of the equipment. Periodic inspection requirements for main reservoirs shall be defined in the railroad's ITM program.

(i) *Brake gauges.* All mechanical gauges and all devices providing electronic indication of air pressure that are used by the engineer to aid in the control or braking of a Tier III trainset shall be located so they may be conveniently read from the engineer's normal position during operation of the trainset.

(j) *Brake application/release.* (1) Brake actuators shall be designed to provide brake pad and shoe clearance when the brakes are released.

(2) The minimum brake cylinder pressure shall be established by the railroad, as approved by FRA, to provide adequate adjustment from minimum service to full service for proper train operation.

(k) *Foundation brake gear.* The railroad shall specify requirements in its ITM program for the inspection, testing, and maintenance of the foundation brake gear.

(l) *Leakage.* (1) If a Tier III trainset is equipped with a brake pipe, the leakage rates shall not exceed the limits defined in either paragraph (l)(2) of this section, or those defined in the Air Consumption Analysis included in the railroad ITM program, whichever is more restrictive. The method of inspection for main reservoir pipe leakage shall be prescribed in the railroad's ITM program.

(2) Brake pipe leakage may not exceed 5 p.s.i. per minute; and with a full service application at maximum brake pipe pressure and with communication to the brake cylinders closed, the brakes shall remain applied for at least 5 minutes.

(m) *Slide protection and alarm.* (1) A Tier III trainset shall be equipped with an adhesion control system designed to automatically adjust the braking force on each wheel to prevent sliding during braking.

(2) A wheel-slide alarm that is visual or audible, or both, shall alert the engineer in the operating cab to wheel-slide conditions on any axle of the trainset.

(3) The railroad shall specify operating restrictions for trainsets with slide protection devices for when they fail to prevent wheel slide within safety parameters preset by the railroad. Both the operating restrictions and safety parameters shall be approved by FRA.

(n) *Monitoring and diagnostics.* Each Tier III trainset shall be equipped with a monitoring and diagnostic system that is designed to automatically assess the functionality of the brake system for the entire trainset. Details of the system operation and the method of communication of brake system functionality prior to the departure of the trainset and while en route shall be described in detail in the railroad's ITM program.

(o) *Train securement.* Independent of the pneumatic brakes, Tier III equipment shall be equipped with a means of securing the equipment against unintentional movement when left standing and unmanned in such a manner that the brake system of the equipment cannot be readily controlled by a qualified person. The railroad shall develop the procedures used to secure the equipment and shall also demonstrate that those procedures effectively secure the equipment on all grade conditions identified by the railroad, as approved by FRA.

(p) *Rescue operation; brake system.* A Tier III trainset's brake system shall be designed to allow a rescue vehicle or trainset to control its brakes when the trainset is disabled.

Interior Fittings and Surfaces

§ 238.733 Interior fixture attachment.

(a) Tier III trainsets shall comply with the interior fixture attachment strength requirements referenced in either of the following paragraphs:

(1) Section 238.233 and APTA PR–CS–S–006–98; or

(2) Section 6.1.4, ''Security of furniture, equipment and features,'' of GM/RT2100, provided that—

(i) The conditions of § 238.705(b)(2) are met;

(ii) Interior fixture attachment strength is sufficient to resist without failure individually applied loads of 5g longitudinal, 3g lateral, and 3g vertical when applied to the mass of the fixture; and

(iii) Use of the standard is carried out under any conditions identified by the railroad, as approved by FRA.

(b) The standards required in this section are incorporated by reference into this section with the approval of the Director of the Federal Register under 5 U.S.C. 552(a) and 1 CFR part 51. All approved material is available for inspection at Federal Railroad Administration, Docket Clerk, 1200 New Jersey Avenue SE, Washington, DC and is available from the sources indicated below. It is also available for inspection at the National Archives and Records Administration (NARA). For information on the availability of this material at NARA, call 202–741–6030 or go to *www.archives.gov/federal-register/cfr/ibr-locations.html.*

(1) American Public Transportation Association, 1666 K Street NW, Washington, DC 20006, *www.aptastandards.com.*

(i) APTA PR–CS–S–006–98, Rev. 1, ''Standard for Attachment Strength of Interior Fittings for Passenger Railroad Equipment,'' Authorized September 28, 2005.

(ii) [Reserved]

(2) Rail Safety and Standards Board Ltd., Communications, RSSB, Block 2 Angel Square, 1 Torrens Street, London, England EC1V 1NY, *www.rgsonline.co.uk.*

(i) Railway Group Standard GM/RT2100, Issue Four, ''Requirements for Rail Vehicle Structures,'' December 2010.

(ii) [Reserved]

§ 238.735 Seat crashworthiness (passenger and cab crew).

(a) Passenger seating in Tier III trainsets shall comply with the requirements referenced in either of the following paragraphs:

(1) Section 238.233 and APTA PR–CS–S–016–99 excluding Section 6, ''Seat durability testing;'' or

(2) Section 6.2, ''Seats for passengers, personnel, or train crew,'' of GM/RT2100, provided that—

(i) The conditions of § 238.705(b)(2) are met;

(ii) Seat attachment strength is sufficient to resist without failure individually applied loads of 5g longitudinal, 3g lateral, and 3g applied to the mass of the seat; and

(iii) Use of the standard is carried out under any conditions identified by the railroad, as approved by FRA.

(b) Each seat provided for an employee in the cab of a Tier III trainset, and any floor-mounted seat in the cab, shall comply with § 238.233(e), (f), and (g).

(c) The standards required in this section are incorporated by reference into this section with the approval of the Director of the Federal Register under 5 U.S.C. 552(a) and 1 CFR part 51. All approved material is available for inspection at Federal Railroad Administration, Docket Clerk, 1200 New Jersey Avenue SE, Washington, DC and are available from the sources indicated below. They are also available for inspection at NARA. For information on the availability of this material at NARA, call 202–741–6030 or go to *www.archives.gov/federal-register/cfr/ibr-locations.html.*

(1) American Public Transportation Association, 1666 K Street NW, Washington, DC 20006, *www.aptastandards.com.*

(i) APTA PR–CS–S–016–99, Rev. 2, ''Standard for Passenger Seats in Passenger Rail Cars,'' Authorized October 3, 2010.

(ii) [Reserved]

(2) Rail Safety and Standards Board Ltd., Communications, RSSB, Block 2 Angel Square, 1 Torrens Street, London, England EC1V 1NY, *www.rgsonline.co.uk.*

(i) Railway Group Standard GM/RT2100, Issue Four, ''Requirements for Rail Vehicle Structures,'' December 2010.

(ii) [Reserved]

§ 238.737 Luggage racks.

(a) Overhead storage racks shall provide longitudinal and lateral restraint for stowed articles. These racks shall incorporate transverse dividers at a maximum spacing of 10 ft. (3 m) to restrain the longitudinal movement of luggage. To restrain the lateral movement of luggage, these racks shall also slope downward in the outboard direction at a minimum ratio of 1:8 with respect to a horizontal plane.

(b) Luggage racks shall comply with the requirements in either of the following paragraphs:

(1) Section 238.233; or

(2) Section 6.8, ''Luggage stowage,'' of GM/RT2100, provided that—

(i) The conditions of § 238.705(b)(2) are met;

(ii) Attachment strength is sufficient to resist without failure individually applied loads of 5g longitudinal, 3g lateral, and 3g vertical; and

(iii) Use of the standard is carried out under any conditions identified by the railroad, as approved by FRA. In particular, the railroad shall determine the maximum allowable weight of the luggage stowed for purposes of evaluating luggage rack attachment strength.

(c) Railway Group Standard GM/RT2100, Issue Four, ''Requirements for Rail Vehicle Structures,'' December 2010 is incorporated by reference into this section with the approval of the Director of the Federal Register under 5 U.S.C. 552(a) and 1 CFR part 51. All approved material is available for inspection at Federal Railroad Administration, Docket Clerk, 1200 New Jersey Avenue SE, Washington, DC and is available from Rail Safety and Standards Board Ltd., Communications, RSSB, Block 2 Angel Square, 1 Torrens Street, London, England EC1V 1NY, *www.rgsonline.co.uk.* It is also available for inspection at NARA. For information on the availability of this material at NARA, call 202–741–6030 or go to *www.archives.gov/federal-register/cfr/ibr-locations.html.*

Emergency Systems

§ 238.741 Emergency window egress and rescue access.

(a) *Emergency window egress and rescue access plan.* If a passenger car in a Tier III trainset is not designed to comply with the requirements in § 238.113 or § 238.114, the railroad shall submit to FRA for approval an emergency window egress and rescue access plan during the design review stage. The plan must include, but is not limited to, the elements in this section.

(b) *Ease of operability.* If an emergency window exit in a passenger car requires the use of a tool, other implement (*e.g.,* hammer), or a mechanism to permit removal of the window panel from the inside of the car during an emergency situation, then the plan must demonstrate the use of the device provides a level of safety equivalent to that required by § 238.113(b). In particular, the plan must address the location, design, and signage and instructions for the device. The railroad shall also include a provision in its Tier III ITM program to inspect for the presence of the device at least each day the car is in service.

(c) *Dimensions.* If the dimensions of a window opening in a passenger car do not comply with the requirements in § 238.113 or § 238.114, then the plan must demonstrate that at least an equivalent level of safety is provided.

(d) *Alternative emergency evacuation openings.* If a passenger car employs the use of emergency egress panels or additional door exits instead of emergency window exits or rescue access windows, then the plan must demonstrate that such alternative emergency evacuation openings provide a level of safety at least equivalent to that required by § 238.113 or § 238.114, or both as appropriate. The plan must address the location, design, and signage and instructions for the alternative emergency evacuation openings.

§ 238.743 Emergency lighting.

(a) Except as provided in paragraph (b) of this section, Tier III trainsets shall comply with the emergency lighting requirements specified in § 238.115.

(b) Emergency lighting back-up power systems shall, at a minimum, be capable of operating after experiencing the individually applied accelerations defined in either of the following paragraphs:

(1) Section 238.115(a)(4)(ii); or

(2) Section 6.1.4, ''Security of furniture, equipment and features,'' of GM/RT2100, provided that—

(i) The conditions of § 238.705(b)(2) are met;

(ii) The initial shock of a collision or derailment is based on a minimum load of 5g longitudinal, 3g lateral, and 3g vertical; and

(iii) Use of the standard is carried out under any conditions identified by the railroad, as approved by FRA.

(c) Railway Group Standard GM/RT2100, Issue Four, ''Requirements for Rail Vehicle Structures,'' December 2010, is incorporated by reference into this section with the approval of the Director of the Federal Register under 5 U.S.C. 552(a) and 1 CFR part 51. All approved material is available for inspection at Federal Railroad Administration, Docket Clerk, 1200 New Jersey Avenue SE, Washington, DC and is available from Rail Safety and Standards Board Ltd., Communications,

RSSB, Block 2 Angel Square, 1 Torrens Street, London, England EC1V 1NY, *www.rgsonline.co.uk*. It is also available for inspection at NARA. For information on the availability of this material at NARA, call 202–741–6030 or go to *www.archives.gov/federal-register/cfr/ibr-locations.html*.

Cab Equipment

§ 238.751 Alerters.

(a) An alerter shall be provided in the operating cab of each Tier III trainset, unless in accordance with paragraph (e) of this section the trainset operates in a territory where an alternate technology providing equivalent safety is installed, such as redundant automatic train control or redundant automatic train stop system.

(b) Upon initiation of the alerter, the engineer must acknowledge the alerter within the time period and according to the parameters specified by the railroad, as approved by FRA, in order for train operations to remain under the full control of the engineer.

(c) If the engineer does not acknowledge the alerter as specified in paragraph (b) of this section, at a minimum a retrievable full service brake application shall occur until the train has stopped, unless the crew intervenes as described in paragraph (d) of this section.

(d) To retrieve the full service brake application described in paragraph (c) of this section, the engineer must acknowledge the alerter and activate appropriate controls to issue a command for brake application as specified by the railroad and approved by FRA.

(e) If an alternate technology to the alerter is used, the railroad shall conduct an analysis that confirms the ability of the technology to provide an equivalent level of safety. This analysis shall be approved by FRA.

§ 238.753 Sanders.

(a) A Tier III trainset shall be equipped with operative sanders, if required by the railroad and as approved by FRA.

(b) Sanders required under this section shall comply with § 229.131(a), (b), and (d) of this chapter, except that instead of the requirements of §§ 229.9 and 229.23 of this chapter:

(1) The requirements of § 238.17 shall apply to the tagging and movement of a Tier III trainset with defective sanders; and

(2) The requirements of the railroad's ITM program shall apply to the next periodic inspection of such a trainset.

(c) In addition to the requirements in paragraph (b) of this section, the railroad's ITM program shall specify the inspection, testing, and maintenance requirements for Tier III trainsets equipped with sanders.

Figure 1 to Subpart H of Part 238—Cylindrical Projectile for Use in § 238.721 End-Facing Cab-Glazing Testing

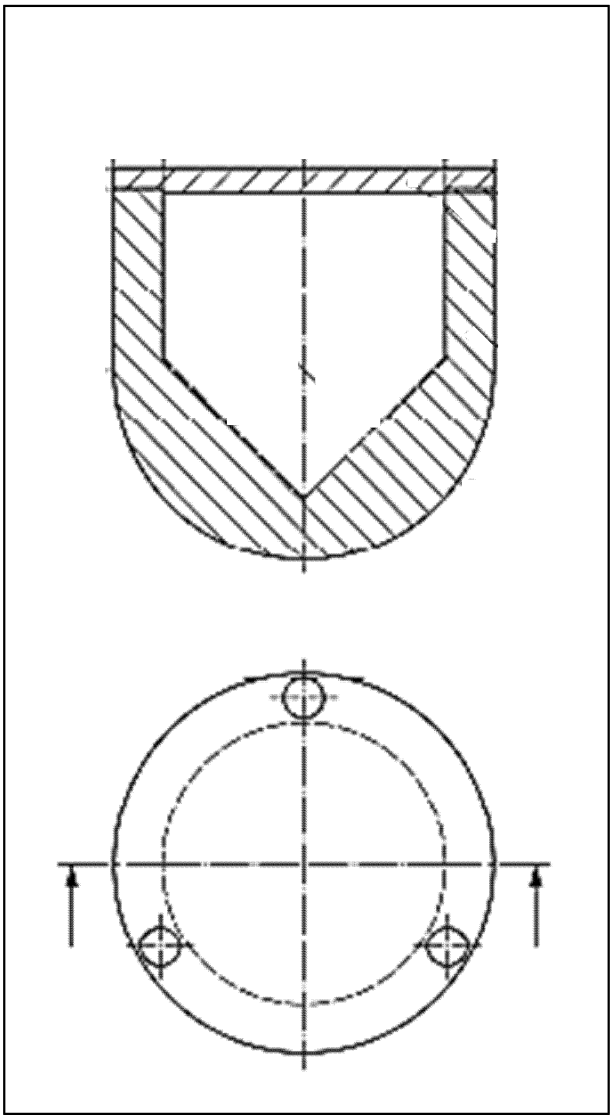

■ 23. Add and reserve subpart I to part 238 to read as follows:

Subpart I—Inspection, Testing, and Maintenance Requirements for Tier III Passenger Equipment—[Reserved]

■ 24. Appendix A to part 238 is amended by adding, in alphabetical order, the entry for new subpart H to read as follows:

APPENDIX A TO PART 238—SCHEDULE OF CIVIL PENALTIES [1 2]

Section		Violation	Willful violation
*	*	*	*
SUBPART H—SPECIFIC REQUIREMENTS FOR TIER III PASSENGER EQUIPMENT			
238.703	Quasi-static compression load requirements	2,500	5,000
238.705	Dynamic collision scenario	2,500	5,000
238.707	Override protection	2,500	5,000

APPENDIX A TO PART 238—SCHEDULE OF CIVIL PENALTIES [1] [2]—Continued

Section		Violation	Willful violation
238.709	Fluid entry inhibition	2,500	5,000
238.711	End structure integrity of cab end	2,500	5,000
238.713	End structure integrity of non-cab end	2,500	5,000
238.715	Roof and side structure integrity	2,500	5,000
238.717	Truck-to-car-body attachment	2,500	5,000
238.721	Glazing	2,500	5,000
238.731	Brake system	2,500	5,000
238.733	Interior fixture attachment	2,500	5,000
238.735	Seat crashworthiness	2,500	5,000
238.737	Luggage racks	2,500	5,000
238.741	Emergency window egress and rescue access	2,500	5,000
238.751	Alerters	2,500	5,000
238.753	Sanders	1,000	2,000

[1] A penalty may be assessed against an individual only for a willful violation. Generally, when two or more violations of these regulations are discovered with respect to a single unit of passenger equipment that is placed or continued in service by a railroad, the appropriate penalties set forth above are aggregated up to a maximum of $27,904 per day. However, failure to perform, with respect to a particular unit of passenger equipment, any of the inspections and tests required under subparts D and F of this part will be treated as a violation separate and distinct from, and in addition to, any substantive violative conditions found on that unit of passenger equipment. Moreover, the Administrator reserves the right to assess a penalty of up to the statutory maximum amount for any violation where circumstances warrant. See 49 CFR part 209, appendix A.

Failure to observe any condition for movement of defective equipment set forth in § 238.17 will deprive the railroad of the benefit of the movement-for-repair provision and make the railroad and any responsible individuals liable for penalty under the particular regulatory section(s) concerning the substantive defect(s) present on the unit of passenger equipment at the time of movement.

Failure to observe any condition for the movement of passenger equipment containing defective safety appliances, other than power brakes, set forth in § 238.17(e) will deprive the railroad of the movement-for-repair provision and make the railroad and any responsible individuals liable for penalty under the particular regulatory section(s) contained in part 231 of this chapter or § 238.429 concerning the substantive defective condition.

The penalties listed for failure to perform the exterior and interior mechanical inspections and tests required under § 238.303 and § 238.305 may be assessed for each unit of passenger equipment contained in a train that is not properly inspected. Whereas, the penalties listed for failure to perform the brake inspections and tests under § 238.313 through § 238.319 may be assessed for each train that is not properly inspected.

[2] The penalty schedule uses section numbers from 49 CFR part 238. If more than one item is listed as a type of violation of a given section, each item is also designated by a ''penalty code,'' which is used to facilitate assessment of civil penalties, and which may or may not correspond to any subsection designation(s). For convenience, penalty citations will cite the CFR section and the penalty code, if any. FRA reserves the right, should litigation become necessary, to substitute in its complaint the CFR citation in place of the combined CFR and penalty code citation, should they differ.

■ 25. Amend paragraph (c) of Appendix B to part 238 by adding two sentences to the end of note 16 of the table of ''Test Procedures and Performance Criteria for the Flammability and Smoke Emission Characteristics of Materials Used in Passenger Cars and Locomotive Cabs'' to read as follows:

Appendix B to Part 238—Test Methods and Performance Criteria for the Flammability and Smoke Emission Characteristics of Materials Used in Passenger Cars and Locomotive Cabs

* * * * *

(c) * * *

[16] * * * For purposes of this Note, the floor assembly of a vehicle in a Tier III trainset may be tested together with undercar design features that separate the vehicle from the fire source, *i.e.,* skirts and bottom covers, to protect against a fire source under and external to the vehicle. To assess the safety associated with testing the floor assembly in this manner, and to protect against a fire source under the floor assembly but internal to the vehicle, safety must also be demonstrated by conducting a fire hazard analysis that includes the considerations in Note 17.

* * * * *

■ 26. Amend the introductory text of appendix F to part 238 by adding a third paragraph to read as follows:

Appendix F to Part 238—Alternative Dynamic Performance Requirements for Front End Structures of Cab Cars and MU Locomotives

* * * * *

Although the requirements of this appendix are stated in terms applicable to Tier I passenger equipment, they are also applicable to Tier III passenger trainsets under § 238.711. Specifically, the cab ends of Tier III trainsets shall comply with the requirements of this appendix to demonstrate the integrity of the end structure.

* * * * *

■ 27. Add appendix G to part 238 to read as follows:

Appendix G to Part 238—Alternative Requirements for Evaluating the Crashworthiness and Occupant Protection Performance of Tier I Passenger Trainsets

General

This appendix applies to Tier I alternative passenger trainsets, as described below. While the appendix may refer to specific units of rail equipment in a trainset, the alternative requirements in this appendix apply only to a trainset as a whole.

This appendix specifies alternatives to the crashworthiness and occupant protection performance requirements for Tier I passenger equipment in §§ 238.203, Static end strength; 238.205, Anti-climbing mechanism; 238.207, Link between coupling mechanism and car body; 238.209(a), Forward end structure of locomotives, including cab cars and MU locomotives; 238.211, Collision posts; 238.213, Corner posts; and 238.219, Truck-to-carbody attachment. To maintain their integrity, these requirements apply as a whole. They also apply in addition to the requirements of §§ 238.209(b); 238.215, Rollover strength; 238.217, Side structure; and 238.233, Interior fittings and surfaces; and they apply with APTA standards for occupant protection, as specified in this appendix.

For ease of comparison with the Tier I requirements in subpart C of this part, this appendix is arranged in order by the Tier I section referenced.

Use of this appendix to demonstrate alternative crashworthiness and occupant protection performance for Tier I passenger equipment is subject to FRA review and approval under § 238.201.

Occupied Volume Integrity

(a) Instead of the requirements of § 238.203, the units of a Tier I alternative passenger trainset may demonstrate their occupied volume integrity by complying with both the quasi-static compression load and dynamic collision requirements in §§ 238.703(b) and 238.705, respectively.

Override Protection

(b) *Colliding equipment.* Instead of the requirements of § 238.205, the units of a Tier I alternative passenger trainset may

demonstrate their ability to resist vertical climbing and override at each colliding interface during a train-to-train collision by complying with the dynamic collision requirements in § 238.707(a).

(c) *Connected equipment.* Instead of the requirements of §§ 238.205 and 238.207, when connected, the units of a Tier I alternative passenger trainset may demonstrate their ability to resist vertical climbing and override by complying with the dynamic collision requirements in § 238.707(b).

Fluid Entry Inhibition

(d) Instead of the requirements of § 238.209(a), each cab end of a Tier I alternative passenger trainset may demonstrate its ability to inhibit fluid entry and provide other penetration resistance by complying with the requirements in § 238.709.

End Structure Integrity of Cab End

(e) Each cab end of a Tier I alternative passenger trainset is subject to the requirements of appendix F to this part to demonstrate cab end structure integrity. For those cab ends without identifiable corner or collision posts, the requirements of appendix F to this part apply to the end structure at the specified locations, regardless of whether the structure at the specified locations is a post.

End Structure Integrity of Non–Cab End

(f) Instead of the applicable requirements of §§ 238.211 and 238.213, the units of a Tier I alternative trainset may demonstrate end structure integrity for other than a cab end by complying with the requirements in § 238.713(b) and (c).

Roof and Side Structure Integrity

(g) A Tier I alternative passenger trainset is subject to the requirements of §§ 238.215 and 238.217 to demonstrate roof and side structure integrity.

Truck Attachment

(h) Instead of the requirements of § 238.219, the units of a Tier I alternative passenger trainset may demonstrate their truck-to-carbody attachment integrity by complying with the requirements in § 238.717 (b) through (e).

Interior Fixture Attachment

(i)(1) A Tier I alternative passenger trainset is subject to the interior fixture requirements in § 238.233. Interior fixtures must also comply with APTA PR–CS–S–006–98, Rev. 1, ''Standard for Attachment Strength of Interior Fittings for Passenger Railroad Equipment,'' Authorized September 28, 2005, and those portions of APTA PR–CS–S–034–99, Rev. 2, ''Standard for the Design and Construction of Passenger Railroad Rolling Stock,'' Authorized June 11, 2006, relating to interior fixtures.

(2) The standards required in this paragraph (i) are incorporated by reference into this paragraph with the approval of the Director of the Federal Register under 5 U.S.C. 552(a) and 1 CFR part 51. All approved material is available for inspection at Federal Railroad Administration, Docket Clerk, 1200 New Jersey Avenue SE, Washington, DC and available from the American Public Transportation Association, 1666 K Street NW, Washington, DC 20006, *www.aptastandards.com*. It is also available for inspection at the National Archives and Records Administration (NARA). For information on the availability of this material at NARA, call 202–741–6030 or go to *www.archives.gov/federal-register/cfr/ibr-locations.html*.

(i) APTA PR–CS–S–006–98, Rev. 1, ''Standard for Attachment Strength of Interior Fittings for Passenger Railroad Equipment,'' Authorized September 28, 2005.

(ii) APTA PR–CS–S–034–99, Rev. 2, ''Standard for the Design and Construction of Passenger Railroad Rolling Stock,'' Authorized June 11, 2006.

Seat Crashworthiness (Passenger and Crew)

(j) *Passenger seating.* (1) Passenger seating in a Tier I alternative passenger trainset is subject to the requirements for seats in § 238.233 and must also comply with APTA PR–CS–S–016–99, Rev. 2, ''Standard for Passenger Seats in Passenger Rail Cars,'' Authorized October 3, 2010, with the exception of Section 6, ''Seat durability testing.''

(2) APTA PR–CS–S–016–99, Rev. 2, ''Standard for Passenger Seats in Passenger Rail Cars,'' Authorized October 3, 2010, is incorporated by reference into this paragraph (j) with the approval of the Director of the Federal Register under 5 U.S.C. 552(a) and 1 CFR part 51. All approved material is available for inspection at Federal Railroad Administration, Docket Clerk, 1200 New Jersey Avenue SE, Washington, DC and is available from the American Public Transportation Association, 1666 K Street NW, Washington, DC 20006, *www.aptastandards.com*. It is also available for inspection at the National Archives and Records Administration (NARA). For information on the availability of this material at NARA, call 202–741–6030 or go to *www.archives.gov/federal-register/cfr/ibr-locations.html*.

(k) *Crew seating.* Each seat provided for an employee regularly assigned to occupy the cab of a Tier I alternative passenger trainset, and any floor-mounted seat in the cab, must comply with § 238.233(e), (f), and (g).

■ 28. Add appendix H to part 238 to read as follows:

Appendix H to Part 238—Rigid Locomotive Design Computer Model Input Data and Geometrical Depiction

(a) As specified in § 238.705(a)(4), this appendix provides input data and a geometrical depiction necessary to create a computer model of the rigid locomotive design for use in evaluating the occupied volume integrity of a Tier III trainset in a dynamic collision scenario. (This appendix may also be applied to a Tier I alternative passenger trainset to evaluate its occupied volume integrity, in accordance with appendix G to this part).

(b) The input data, in the form of an input file, contains the geometry for approximately the first 12 feet of the rigid locomotive design. Because this input file is for a half-symmetric model, a locomotive mass corresponding to 130,000 pounds of weight is provided for modeling purposes—half the 260,000 pounds of weight specified for the locomotive in § 238.705(a)(4). Figure 1 to this appendix provides two views of the locomotive's geometric depiction. The input data is contained in Appendix C to FRA's Technical Criteria and Procedures Report, available at *http://www.fra.dot.gov/eLib/details/L01292#p4_z50_gD_lRT*.

Figure 1 to Appendix H—Side and Front Views of Rigid Locomotive Model

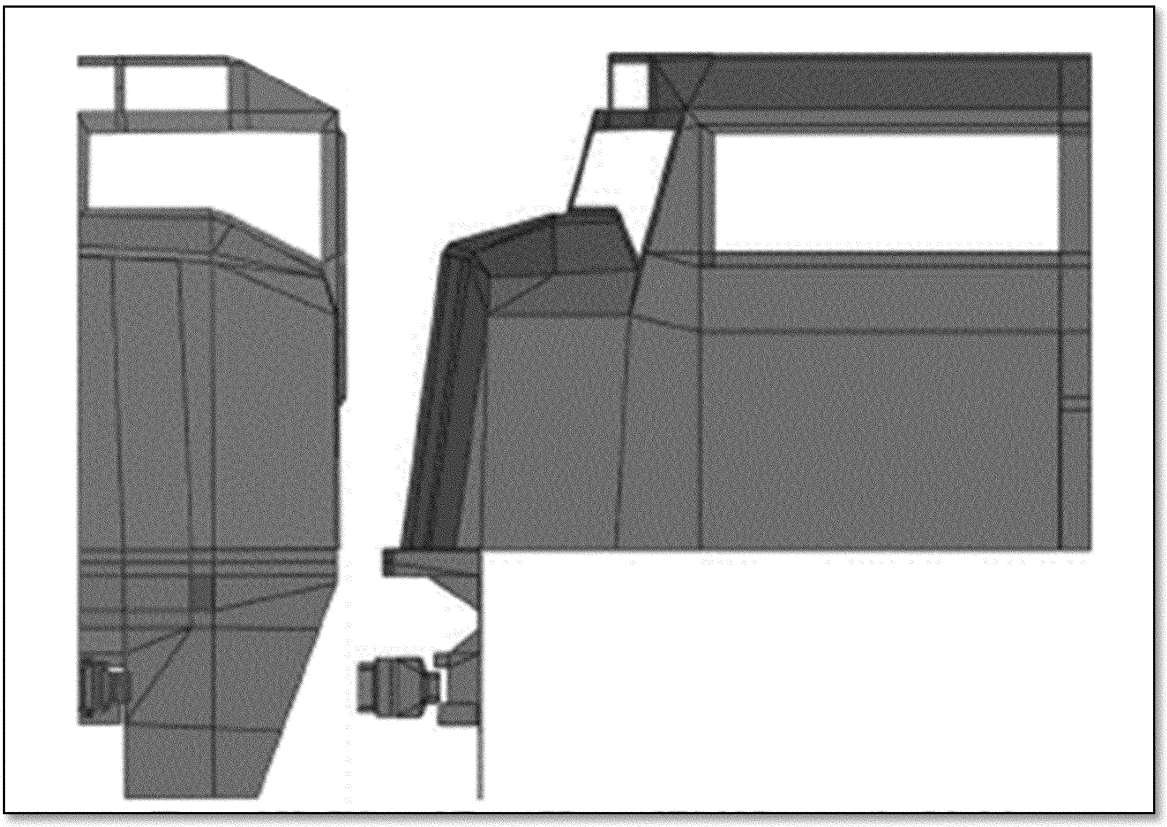

Issued in Washington, DC.

Ronald L. Batory,

Administrator.

[FR Doc. 2018–25020 Filed 11–20–18; 8:45 am]

BILLING CODE 4910–06–P