CONSUMER PRODUCT SAFETY COMMISSION

16 CFR Part 1211

[Docket No. CPSC–2015–0025]

Safety Standard for Automatic Residential Garage Door Operators

AGENCY: U.S. Consumer Product Safety Commission.

ACTION: Direct final rule.

SUMMARY: The Consumer Product Safety Commission (Commission, or CPSC) is amending its regulation, *Safety Standard for Automatic Residential Garage Door Operators,* to reflect changes made by Underwriters Laboratories, Inc. (UL), in the entrapment protection provisions in UL's standard UL 325, Standard for Safety: Door, Drapery, Gate, Louver, and Window Operators and Systems, Seventh Edition.

DATES: The rule is effective on September 11, 2018, unless we receive significant adverse comment by August 13, 2018. If we receive timely significant adverse comments, we will publish notification in the **Federal Register**, withdrawing this direct final rule before its effective date. The incorporation by reference of the publications listed in this rule is approved by the Director of the Federal Register as of September 11, 2018.

ADDRESSES: You may submit comments, identified by Docket No. CPSC–2015–0025, by any of the following methods:

Electronic Submissions: Submit electronic comments to the Federal eRulemaking Portal at: *www.regulations.gov.* Follow the instructions for submitting comments. The Commission does not accept comments submitted by electronic mail (email), except through *www.regulations.gov.* The Commission encourages you to submit electronic comments by using the Federal eRulemaking Portal, as described above.

Written Submissions: Submit written submissions by mail/hand delivery/courier to: Office of the Secretary, Consumer Product Safety Commission, Room 820, 4330 East West Highway, Bethesda, MD 20814; telephone (301) 504–7923.

Instructions: All submissions received must include the agency name and docket number for this document. All comments received may be posted without change, including any personal identifiers, contact information, or other personal information provided, to: *www.regulations.gov.* Do not submit confidential business information, trade secret information, or other sensitive or protected information that you do not want to be available to the public. If furnished at all, such information should be submitted in writing.

Docket: For access to the docket to read background documents or comments received, go to: *www.regulations.gov,* and insert the docket number CPSC–2015–0025, into the ''Search'' box, and follow the prompts.

FOR FURTHER INFORMATION CONTACT: Troy W. Whitfield, Lead Compliance Officer, Office of Compliance, Consumer Product Safety Commission, 4330 East West Highway, Bethesda, MD 20814–4408; Telephone (301) 504–7548 or email: *twhitfield@cpsc.gov.*

SUPPLEMENTARY INFORMATION:

A. Background

The Commission has regulations for residential garage door operators (GDOs) to protect consumers from the risk of entrapment. 16 CFR part 1211. The Commission first issued the GDO standard in 1991, as required by the Consumer Product Safety Improvement Act of 1990 (Improvement Act), Public Law 101–608. Section 203 of the Improvement Act mandated that the entrapment protection requirements of the 1988 version of UL's 325, Third Edition, ''Door, Drapery, Louver and Window Operators and Systems,'' be considered a consumer product safety rule under the Consumer Product Safety Act. Section 203(c) of the Improvement Act established procedures for the Commission to revise the Commission's GDO standard. When UL revises the entrapment protection requirements of UL 325, UL must notify the Commission of the revision, and that revision ''shall be incorporated in the consumer product safety rule . . . unless, within 30 days of such notice, the Commission notifies [UL] that the Commission has determined that such revision does not carry out the purposes of subsection (b) [of section 203 of the Improvement Act, which mandated the UL 325 entrapment protection requirements initially]. As provided in the Improvement Act, the Commission has revised the GDO standard after UL has notified the Commission of changes to UL 325's entrapment protection requirements several times in the past.

The mandatory rule (16 CFR part 1211) primarily requires that all residential GDOs sold in the United States have an inherent reversing mechanism capable of reversing the motion of a moving garage door within 2 seconds, to reduce the risk of entrapment. This system is known as an ''inherent system'' because it is physically located within the housing of the GDO. In addition, the rule requires that the operator shall be provided with a means for connection of an external entrapment-sensing device. Most GDOs on the market today use an electric eye as the external entrapment-sensing device. The purpose of this device is to monitor the area under the garage door to detect people who might become entrapped by the garage door. The standard also allows a device, known as a ''door edge sensor,'' similar to the sensors used on elevator doors, or allows for any other device that provides equivalent protection. These devices are known as ''external entrapment-sensing devices'' because they are located outside the housing of the GDO.

In addition, the rule requires all GDOs to have a device referred to as a ''30-second clock.'' The 30-second clock is a back-up device that reopens the door if the door cannot close completely within 30 seconds, as would be the case when a person becomes entrapped by the door. The 30-second clock is a back-up to the primary, 2-second inherent entrapment system.

The rule also requires that every GDO be equipped with a ''means to manually detach the door operator from the door.'' This requirement enables a person to detach the operator from the door quickly if a person becomes entrapped under the door. For most garage doors, the means of detachment occurs by pulling on a red handle that hangs below the GDO.

The Commission last updated the mandatory rule in 2016, to reflect changes made to the entrapment protection provisions of UL 325 up to that time.

B. Changes to UL 325

Since the last update of the mandatory rule in 2016, there have been three published revisions of the voluntary standard, UL 325, including publication of the Seventh Edition in May 2017.

On December 20, 2016, UL notified the CPSC that UL had revised the entrapment protection requirements of UL 325 and had published revisions to the Sixth Edition on December 15, 2016. On June 16, 2017, UL notified the Commission that UL published additional revisions to UL 325, Sixth Edition, on May 25, 2017, which became the Seventh Edition.

On January 11, 2017, and July 5, 2017, CPSC staff submitted briefing packages to the Commission, recommending that the Commission incorporate the applicable changes to UL 325, because

the changes are likely to reduce the possibility of children becoming entrapped by partially open garage doors. On January 18, 2017, and July 11, 2017, the Commission voted to approve staff's recommendations to accept the revisions to UL 325 regarding the entrapment protection requirements for automatic residential GDOs, in accordance with the procedure in the Improvement Act.

Consistent with the Commission's previous votes to include the revisions regarding the entrapment protection requirements for automatic residential GDOs, this rule revises the mandatory GDO rule at 16 CFR part 1211, to include the revisions regarding the entrapment protection requirements for automatic residential GDOs in UL 325, Seventh Edition.

C. Description of the Direct Final Rule

The direct final rule amends 16 CFR part 1211, to include the revisions regarding the entrapment protection requirements for automatic residential GDOs in UL 325, Seventh Edition. All of the revisions in the direct final rule concerning the GDO standard are in subpart A and subpart D. The direct final rule does not change any of the certification (subpart B) or recordkeeping (subpart C) provisions of the GDO standard.

All of the revisions to the relevant provisions of 16 CFR part 1211 are described in the summary of changes below:

• *Alternative method to assess electronic circuits.* The revised UL 325 added a section titled, ''Supplement SA'' to UL 325, which provides an alternate method for evaluating protective electronic circuits and controls based on the requirements of UL/IEC 60335–1, ''*Standard for Safety of Household and Similar Electrical Appliances, Part 1: General Requirements.*'' UL/IEC 60335–1 was developed to promote harmonization with international standards and will eventually replace UL 991, ''*Standards for Tests for Safety-Related Controls Employing Solid-State Devices,*'' which is being phased out. The Commission's mandatory safety standard for GDOs currently incorporates by reference UL 991 (§§ 1211.4(c), 1211.5(a), and 1211.5(b)(3)). The Supplement SA requirements allow an alternate method for assessing the reliability of GDO electronic or solid-state circuits, including entrapment-protection circuits, which perform back-up, limiting, or other functions intended to reduce the risk of fire, electric shock, or injury to persons (§§ 1211.4(c), 1211.5(a), 1211.5(b)(4), and a new paragraph for an incorporation by reference of Supplement SA in § 1211.40(d)(1) and redesignating paragraphs (d)(1) through (3) as (d)(2) through (4)).

• *Additional requirements for unattended operation.* The revised UL 325 added a new section titled, ''*Unattended operation control accessory,*'' which provides additional requirements for unattended operation of GDOs, including remote monitoring and unattended activation via wireless or internet-connected devices. To ensure safe unattended operation of GDOs, the new requirements clarify visual and audible alarm operation, include provisions for maintaining compliance with the entrapment protection of an external accessory, and provides the necessary instructions and markings. (New § 1211.14(f)).

• *Revision to edge sensor requirements.* The revised UL 325 expanded the edge sensor test requirements (§ 1211.12) and clarified that external edge sensors shall operate as required when tested per the new requirements (§§ 1211.8(a) and 1211.8(b)), as well as comply with the applicable normal operation test (§§ 1211.10(b)(3), 1211.10(c) (3), and 1211.10(e)(4)). The revision expanded the edge sensor test requirements for GDOs to stipulate specific requirements based on the GDO type; for example: Sectional door vs. one-piece door, and horizontally moving door vs. vertically moving door. The revision replaced Figure 6 with several new figures to illustrate the test procedures for each type of GDO (Figures 6A through 6I). The revision clarified that the edge sensor endurance test shall be conducted at room temperature (§ 1211.12(b)).

• *Clarification regarding visual alarm.* The revised UL 325 clarified the visual alarm flash rate required during unattended operation of the GDO (§ 1211.14(c)).

• *Clarification regarding certain materials.* The revised UL 325 clarified that an external protection device using polymeric or elastomeric material must meet the specified impact test requirements and remain fully operational at room temperature (§ 1211.10(e)(1) and (3)).

• *Exception from impact test.* The revised UL 325 added an exception for polymeric or elastomeric materials that crack or break during the impact test to be acceptable if they pass the water exposure test in the damaged condition (§ 1211.10 (e) (1)).

• *Clarification regarding external secondary entrapment protection.* The revised UL 325 clarified the means for connection of an external secondary entrapment protection device applicable to vertically moving and horizontally moving GDOs (§ 1211.10) and clarified that for horizontally sliding GDOs, the GDO is not required to open the door a minimum of 2 inches when the GDO senses a second obstruction during the *reversing* travel (§ 1211.7(c)(1) and 1211.7(c)(7)).

• *Updated test figure references.* The revised UL 325 updated the figure references for the general (§ 1211.13(a)) and puncture-resistance test (§ 1211.12 (d)).

As noted, on January 18, 2017, and July 11, 2017, the Commission voted to include the revisions regarding the entrapment protection requirements for automatic residential GDOs in UL 325, Seventh Edition. In accordance with its previous vote, the Commission is issuing this direct final rule that amends the mandatory GDO rule at 16 CFR part 1211 to include the revisions to the entrapment protection requirements of UL 325.

D. Incorporation by Reference

The Office of the Federal Register (OFR) has regulations concerning incorporation by reference. 1 CFR part 51. Under these regulations, agencies must discuss, in the preamble to a final rule, ways that the materials the agency incorporates by reference are reasonably available to interested persons and how interested parties can obtain the materials. In addition, the preamble to the final rule must summarize the material. 1 CFR 51.5(b).

Supplement SA of UL 325 provides an alternate test method for assessing the reliability of GDO electronic or solid-state circuits, including entrapment protection circuits, which perform back-up, limiting, or other functions intended to reduce the risk of fire, electric shock, or injury to persons. As noted, the direct final rule adds references to Supplement SA in §§ 1211.4, 1211.5, and a new paragraph § 1211.40(d)(1) in subpart D that incorporates by reference Supplement SA.

The UL standard listed above is copyrighted. The UL standard may be obtained from UL, 151 Eastern Avenue, Bensenville, IL 60106, Telephone: 1–888–853–3503 or online at: *http://ulstandards.ul.com/.* One may also inspect a copy of the above-referenced standard at CPSC's Office of the Secretary, U.S. Consumer Product Safety Commission, Room 820, 4330 East West Highway, Bethesda, MD 20814, Telephone: (301) 504–7923.

E. Direct Final Rule Process

The Commission is issuing this rule as a direct final rule. Although the Administrative Procedure Act (APA) generally requires notice and comment rulemaking, section 553 of the APA provides an exception when the agency, for good cause, finds that notice and public procedure are ''impracticable, unnecessary, or contrary to the public interest.'' In Recommendation 95–4, the Administrative Conference of the United States (ACUS) endorsed direct final rulemaking as an appropriate procedure to expedite promulgating rules that are noncontroversial and that are not expected to generate significant adverse comment. *See* 60 FR 43108 (August 18, 1995). Consistent with ACUS's recommendation, the Commission is publishing this rule as a direct final rule because we do not expect any significant adverse comments.

The Commission is taking the limited action of amending the GDO rule to conform the regulation to the changes to UL 325 that were previously accepted by the Commission in January and July 2017. Public comment will not impact the Commission's acceptance of the substantive changes to UL 325. Because this document merely updates the GDO rule, the Commission believes this rulemaking is a non-controversial matter that is not likely to generate comments. Therefore, the Commission concludes that the direct final rule process is appropriate.

Unless we receive a significant adverse comment within 30 days, the rule will become effective on September 11, 2018. In accordance with ACUS's recommendation, the Commission considers a significant adverse comment to be one in which the commenter explains why the rule did not accurately update the codified text in 16 CFR part 1211. We note that comments on the Commission's previous underlying acceptance of the revisions to UL 325 are not considered significant adverse comments because the only change this rule makes is to revise the GDO rule to conform to the revisions to UL 325 previously accepted by the Commission.

Should the Commission receive a significant adverse comment, the Commission would withdraw this direct final rule. Depending on the comments and other circumstances, the Commission may then incorporate the adverse comment into a subsequent direct final rule or publish a notice of proposed rulemaking, providing an opportunity for public comment.

F. Effective Date

Based on reports from industry representatives, all known manufacturers and importers currently conform to the UL 325, Seventh Edition revisions contained in the direct final rule. Therefore, the effective date of the direct final rule is September 11, 2018. This effective date would not adversely affect the cost or availability of conforming GDOs.

G. Regulatory Flexibility Act

The Regulatory Flexibility Act (RFA) generally requires that agencies review proposed and final rules for the rules' potential economic impact on small entities, including small businesses, and prepare regulatory flexibility analyses. 5 U.S.C. 603 and 604. Staff researched the potential effects of the direct final rule on small entities, including small manufacturers, importers, and private labelers. Staff has identified 19 firms that market GDOs in the United States. Five of these are either large firms or subsidiaries of large foreign or domestic companies. The 14 remaining companies appear to be small firms under U.S. Small Business Administration (SBA) size standards (13 CFR part 121).

Staff estimates, based on industry sales data, that about 5 million to 7 million GDOs are installed annually. A review of company information and staff's contacts with industry representatives indicate that all known manufacturers and importers market only products that conform to UL 325. All of these firms' GDOs reportedly conform to the UL 325, Seventh Edition requirements that became effective in May 2017. These firms, including the small firms, have already incurred the design and testing costs associated with the minor changes in the UL 325 test procedures made since 2016. Therefore, the direct final rule would not impose any new costs on small producers or importers. Pursuant to section 605(b) of the RFA, because the existing level of conformance is virtually 100 percent, and no new compliance costs or other burdens would be associated with the direct final rule, the Commission certifies that this rule will not have a significant impact on a substantial number of small entities.

H. Preemption

The Improvement Act contains a preemption provision which states: ''those provisions of laws of States or political subdivisions which relate to the labeling of automatic residential garage door openers and those provisions which do not provide at least the equivalent degree of protection from the risk of injury associated with automatic residential garage door openers as the consumer product safety rule'' are subject to preemption under 15 U.S.C. 2075. Public Law 101–608, section 203(f).

I. Environmental Considerations

The Commission's regulations provide a categorical exclusion for Commission rules from any requirement to prepare an environmental assessment or an environmental impact statement because they ''have little or no potential for affecting the human environment.'' 16 CFR 1021.5(c)(2). This rule falls within the categorical exclusion, so no environmental assessment or environmental impact statement is required. The Commission's regulations state that safety standards for products normally have little or no potential for affecting the human environment. 16 CFR 1021.5(c)(1). Nothing in this rule alters that expectation.

List of Subjects in 16 CFR Part 1211

Consumer protection, Imports, Incorporation by reference, Labeling, Reporting and recordkeeping requirements.

For the reasons set forth in the preamble, the Commission amends 16 CFR part 1211 as follows:

PART 1211—SAFETY STANDARDS FOR AUTOMATIC RESIDENTIAL GARAGE DOOR OPERATORS

■ 1. The authority citation for part 1211 continues to read as follows:

Authority: Sec. 203 of Pub. L. 101–608, 104 Stat. 3110; 15 U.S.C. 2063 and 2065.

Subpart A—[Amended]

■ 2. Amend § 1211.4 by revising paragraph (c) to read as follows:

§ 1211.4 General requirements for protection against risk of injury.

* * * * *

(c) An electronic or solid-state circuit that performs a back-up, limiting, or other function intended to reduce the risk of fire, electric shock, or injury to persons, including entrapment protection circuits, shall comply with the requirements in UL 991 (incorporated by reference, see § 1211.40), including environmental and stress tests appropriate to the intended usage of the end-product. Exception: A control or electronic circuit that complies with Supplement SA of UL 325–2017 (incorporated by reference, see § 1211.40) is considered to fulfill this requirement.

■ 3. Amend § 1211.5 by:

■ a. Revising paragraph (a) introductory text;
■ b. Removing ''and'' from the end of paragraph (b)(2);
■ c. Removing the period from the end of paragraph (b)(3) and adding ''; and'' in its place; and
■ d. Adding paragraph (b)(4).

The revision and addition read as follows:

§ 1211.5 General testing parameters.

(a) The following test parameters are to be used in the investigation of the circuit covered by § 1211.4(c) for compliance with either, UL 991, or Supplement SA of UL 325–2017 (incorporated by reference, see § 1211.40):

(b) * * *

(4) During evaluation of the circuit to the requirements of Supplement SA of UL 325–2017 (incorporated by reference, see § 1211.40).

■ 4. Amend § 1211.6 by revising paragraphs (b)(2), (b)(3)(i) introductory text, and (d)(2) to read as follows:

§ 1211.6 General entrapment protection requirements.

* * * * *

(b) * * *

(2) Shall be provided with a means for connection of an external secondary entrapment protection device as described in § 1211.8 (a) and (c) through (e), as applicable to vertically moving doors; or

(3)(i) Shall be provided with an inherent secondary entrapment protection device as described in §§ 1211.8(a) and (f), 1211.10, and 1211.12 and is:

* * * * *

(d) * * *

(2) Shall be provided with a means for connection of an external secondary entrapment protection device for each leading edge as described in § 1211.8(c) through (e), as applicable to horizontally moving doors.

* * * * *

■ 5. Amend § 1211.7 by revising paragraphs (c)(1)(ii) and (iii) and (c)(7)(i), to read as follows:

§ 1211.7 Inherent primary entrapment protection requirements.

* * * * *

(c) * * *

(1) * * *

(ii) The door operator is not required to open the door a minimum 2 inches (50.8 mm) when the operator senses a second obstruction during the reversing travel.

(iii) The door operator is not required to open the door a minimum 2 inches (50.8 mm) when a control is actuated to stop the door during movement towards the open position—but the door can not be moved towards the closed position until the operator reverses the door a minimum of 2 inches (50.8 mm).

* * * * *

(7)(i) An operator, employing an inherent entrapment protection control that measures or monitors the actual position of the door, shall initiate reversal of the door and shall return the door to, and stop the door at, the fully open position in the event the inherent door operation ''profile'' of the door differs from the originally set parameters. The system shall measure or monitor the position of the door at increments not greater than 1 inch (25.4 mm).

* * * * *

■ 6. Amend § 1211.8 by revising paragraphs (a)(1)(ii), and (b)(2) to read as follows:

§ 1211.8 Secondary entrapment protection requirements.

(a)(1) * * *

(ii) An external edge sensor installed on the edge of the door that, when activated as tested per § 1211.12(a)(4)(1) results in an operator that is closing a door to reverse direction of the door, returns the door to, and stops the door at the fully open position, and the sensor prevents an operator from closing an open door,

* * * * *

(b) * * *

(2) An external edge sensor installed on the edge of the door that, when activated as tested per § 1211.12 (a)(4)(2), results in an operator that is closing or opening a door to reverse direction of the door for a minimum of 2 inches (50.8 mm).

* * * * *

■ 7. Amend § 1211.10 by revising paragraphs (b)(3)(ii), (c)(3)(ii), (e)(1)(ii), (e)(3), and (e)(4)(ii) to read as follows:

§ 1211.10 Requirements for all entrapment protection devices.

* * * * *

(b) * * *

(3) * * *

(ii) An edge sensor shall comply with the applicable Normal Operation test, per § 1211.12(a).

(c) * * *

(3) * * *

(ii) An edge sensor shall comply with the applicable Normal Operation Test, per § 1211.12(a).

* * * * *

(e) * * *

(1) * * *

(ii) The part shall operate as intended, per paragraph (e)(4) of this section at room temperature, or, if dislodged after the test, but not cracked or broken, is capable of being restored to its original condition. Exception: If a part is cracked or broken, as an alternative, it may be subjected to the Splash Tests, per paragraph (c) of this section, after the impact test. After the water exposure tests, the device shall either:

(A) Operate as intended per paragraph (e)(4) of this section; or

(B) Shut down safely (*i.e.* provide an obstruction signal to the door).

* * * * *

(3) In lieu of conducting the room temperature test described in paragraph (e)(2) of this section, each of three samples of a device exposed to outdoor weather when the door is in the closed position are to be cooled to a temperature of minus 31.0 ±3.6 °F (minus 35.0 ±2.0 °C) and maintained at this temperature for 3 hours. Three samples of a device employed inside the garage are to be cooled to a temperature of 32.0 °F (0.0 °C) and maintained at this temperature for 3 hours. While the sample is still cold, the samples shall be subject to the test described in paragraph (e)(2) of this section, and shall comply with paragraph (e)(1)(i) of this section. After determining compliance with paragraph (e)(1)(i) of this section, the sample shall be allowed to return to room temperature, and then shall comply with paragraph (e)(1)(ii) of this section.

(4) * * *

(ii) An edge sensor shall comply with the applicable Normal Operation Test, per § 1211.12(a).

* * * * *

■ 8. Amend § 1211.12 by adding paragraphs (a)(4) and (5), and revising paragraphs (b) and (d)(2) and (3) to read as follows:

§ 1211.12 Requirements for edge sensors.

(a) * * *

(4)(i) An edge sensor, when installed on a representative door, shall actuate upon the application of a 15 lbf (66.7 N) or less force in the direction of the application when tested at room temperature 25 °C ±2 °C (77 °F ±3.6 °F) and, additionally, when intended for use with gate operators, shall actuate at 40 lbf (177.9 N) or less force when tested at −35 °C ±2 °C (−31 °F ±3.6 °F).

(A) For an edge sensor intended to be used on a sectional door, the force is to be applied by the longitudinal edge of a 1⅞ in (47.6 mm) diameter cylinder placed across the sensor so that the axis is perpendicular to plane of the door. See Figures 6A and 6B to this subpart.

(B) For an edge sensor intended to be used on a one piece door, swinging

door, or swinging gate, the force is to be applied so that the axis is at an angle 30 degrees from the direction perpendicular to the plane of the door. See Figures 6C and 6D to this subpart.

(C) For an edge sensor that wraps around the leading edge of a swinging one-piece door, providing activation in both directions of travel, the force is to be applied so that the axis is at an angle 30 degrees from the direction perpendicular to both the closing direction and the opening direction. See Figure 6E to this subpart.

(ii) With respect to the Edge Sensor Test specified in paragraph (a)(4)(ii) of this section, the test is to be repeated at various representative points of the edge sensor across the length of the edge sensor. See Figures 6F and 6G to this subpart.

(5) *Residential garage door operators.* (i) For vertically moving residential garage door operators intended to be used with an external edge sensor, with reference to 32.3.1(b), a 1⅝ in by 3½ in (41.3 mm by 88.9 mm) solid rectangular object not less than 6 in (152 mm) long is to be fixed in an immobile position at the fully closed position with the longitudinal axis perpendicular to the edge of the door. The 1⅝ in (41.3 mm) side of the obstruction facing the leading edge is to contact the moving door at various points along the width of the door. See Figure 6H to this subpart.

(ii) For horizontally moving residential garage door operators intended to be used with an external edge sensor, with reference to 32.3.2(b), a 1⅝ in by 3½ in (41.3 mm by 88.9 mm) solid rectangular object not less than 6 in (152 mm) long is to be fixed in an immobile position with the longitudinal axis perpendicular to the edge of the door. The 1⅝ in (41.3 mm) side of the obstruction facing the leading edge is to contact the moving door at various points along the leading edge of the door. The same object is then to be arranged to contact the moving door at various points along the trailing edge of the door. See Figure 6I to this subpart.

(b) *Endurance test.* An edge sensor system and associated components shall withstand 30,000 cycles of mechanical operation without failure. For this test, the edge sensor is to be cycled by the repetitive application of the force as described in paragraph (a)(4)(i) of this section but at room temperature only. The force is to be applied to the same location for the entire test. For an edge sensor system employing integral electric contact strips, this test shall be conducted with the contacts connected to a load no less severe than it controls in the operator. For the last 50 cycles of operation, the sensor shall function as intended when connected to an operator.

* * * * *

(d) * * *

(2) For a vertically moving door, a sample of the edge sensor is to be installed in the intended manner on a representative door edge. The probe described in figure 7 to subpart A is to be applied with a 20 pound-force (89 N) to any point on the sensor that is 3 inches (76 mm) or less above the floor is to be applied in the direction specified in the Edge Sensor Normal Operation Test, Figure 6A or 6C to subpart A as applicable. The test is to be repeated on three locations on each surface of the sensor being tested.

(3) For horizontally sliding doors, sample of the edge sensor is to be installed in the intended manner on a representative door edge. The probe described in figure 7 to subpart A is to be applied with a 20 lbf (89 N) to any point on the sensor when the door is within 3 in (76 mm) of its fully open position and within 3 in (76 mm) of any stationary wall. For each type of door, the force is to be applied in the direction specified in the Edge Sensor Normal Operation Test, Figure 6B to subpart A. The test is to be repeated on three locations on each surface of the sensor being tested.

■ 9. Amend § 1211.13 by revising paragraph (a)(4) to read as follows:

§ 1211.13 Inherent force activated secondary door sensors.

(a) * * *

(4) The test cylinder referred to in paragraph (b)(7) of this section shall be a 1⅞ in (47.6 mm) diameter cylinder placed under the door so that the axis is perpendicular to the plane of the door. See figure 6A to subpart A.

* * * * *

■ 10. Amend § 1211.14 by revising paragraph (c)(4), and adding paragraph (f) to read as follows:

§ 1211.14 Unattended operation requirements.

* * * * *

(c) * * *

(4) The visual alarm signal described in paragraph (c)(1) of this section shall be visible within the confines of a garage using a flashing light of at least 40 watt incandescent or 360 lumens. The flash rate shall be at least once per second, with a duration of 100 ms to 900 ms, for the duration of the alarm.

* * * * *

(f) *Unattended operation control accessory*—(1) *General.* A residential garage door operator control accessory shall be permitted to be supplied separate from the operator, and may permit unattended operation to close a garage door, provided the control accessory complies with the additional requirements of paragraphs (f)(2) through (6) of this section. Exception: Unattended operation shall not be permitted on one-piece garage doors or swinging garage doors. A control accessory that has an unattended operation close feature shall identify that the unattended operation closing feature is only permitted to be enabled when installed with a sectional door by complying with:

(i) The installation instructions of § 1211.16 (b)(1)(ii);

(ii) The markings of § 1211.17(h); and

(iii) the carton markings of § 1211.18(m).

(2) *Operator system.* The control accessory shall require one or more intentional actions to enable unattended operation to function when connected to an operator system, such as setting a power head switch or wall-control switch. For an accessory requiring installation and set-up in order to enable unattended operation, the installation and set-up may be considered satisfying this requirement.

(3) *Alarm signal.* (i) The control accessory alone or in combination with the operator system shall provide an audible and visual alarm signal.

(ii) The alarm shall signal for a minimum of 5 seconds before any unattended closing door movement, or before any door movement if the next direction of door travel cannot be determined.

(iii) The audible signal shall be heard within the confines of a garage. The audio alarm signals for the alarm specified in paragraph (f)(3)(i) of this section shall be generated by devices such as bells, horns, sirens, or buzzers. The signal shall have a frequency in the range of 700 to 3400 Hz, either a cycle of the sound level pulsations of 4 to 5 per second or one continuous tone, a sound level at least 45 dB 10 ft (305 cm) in front of the device over the voltage range of operation.

(iv) The visual alarm signal of paragraph (f)(3)(i) of this section shall be visible within the confines of a garage using a flashing light of at least 40 watt incandescent or 360 lumens.

(v) When the visual alarm or the audio alarm, or both, are external to the control accessory and are not part of main operator unit, the control accessory shall monitor for the connection of and proper operation of both the visual and audible alarms, prior to initiating door travel.

(4) *Controls.* (i) During the pre-motion signaling period defined in paragraph (f)(3)(ii) of this section, activation of any user door control (*e.g.* wall control, wireless remote, keypad) shall prevent the pending unattended door movement. Door movement resulting from activation of a user door control is not prohibited.

(ii) Upon activation of a user door control during unattended door movement:

(A) The operator shall function in the same manner as if the control accessory were not present;

(B) The control accessory shall not interfere with, override, or alter the normal operation of the operator; and

(C) The door shall stop, and may reverse the door on the closing cycle. On the opening cycle, activation of a user door control shall stop the door but not reverse it.

(iii) If an unattended door travelling in the closing direction is stopped and reversed by an entrapment protection device, the control accessory alone or in combination with the operator system shall be permitted one additional unattended operation attempt to close the door.

(iv) After two attempts per paragraph (d)(3) of this section, the control accessory alone or in combination with the operator system shall suspend unattended operation. The control accessory alone or in combination with the operator system shall require a renewed, intended input, via user door control (*e.g.,* wall control, wireless remote, keypad) other than the unattended activation device, prior to re-enabling unattended operation.

(5) *Entrapment protection.* (i) The control accessory shall not interfere with, override, or alter any entrapment protection features of the operator or system per §§ 1211.7 and 1211.8. A control accessory that only provides a momentary signal (wired or wireless) to start the door is considered to comply with this requirement.

(ii) A control accessory shall only be used with an operator when the combination of the operator and the control accessory comply with the applicable entrapment protection features including:

(A) Inherent Primary Entrapment Protection, in accordance with § 1211.7;

(B) Secondary Entrapment Protection, in accordance with § 1211.8.

(iii) A control accessory shall be marked to indicate ''For use only with garage door operators complying with UL 325, manufactured after ____,'' or, ''For use only with the following garage door operators:____.'' The date (*e.g.,* ''1993,'' ''February 21, 2008''), or the additional information provided in the blank shall be added by the accessory manufacturer such that the combination of the control and operator(s) it is intended for use with complies with paragraph (f)(5)(ii) of this section. This marking shall appear on the packaging and on the product, and shall be repeated in the instructions accompanying the accessory.

(iv) To comply with paragraph (f)(5)(ii) of this section a control accessory shall comply with one or more of the following:

(A) Not be capable of operating when connected to an operator that is not compliant with paragraph (f)(5)(ii) of this section;

(B) Be restricted to function only with specific operators, such that the combination of the control and the operator are compliant with paragraph (f)(5)(ii) of this section;

(C) Provide additional functionality to an operator or system such that when operating via the control accessory, the combination of the control accessory and the operator complies with paragraph (f)(5)(ii) of this section;

(D) Be marked to indicate as indicated in paragraph (f)(5)(ii) of this section.

(6) *Instructions and markings.* (i) The control accessory shall be provided with instructions as follows:

(A) Instructions per § 1211.16, as applicable.

(B) Instructions that repeat any warning or cautionary product markings and field labels required below.

(ii) The control accessory shall be provided with markings as follows:

(A) Markings on the product per § 1211.18, as applicable.

(B) In lieu of § 1211.18(m), the product package shall be marked with the following or equivalent:

> ''WARNING: To reduce the risk of injury to persons—Only enable [+] feature when installed with sectional door.'', where + is the unattended operation closing function, or ''WARNING: To reduce the risk of injury to persons—Do not use this device with one-piece doors or swinging doors.''

(C) On the package or the product—any other markings related to use of the control with specific operators, per paragraph (f)(5)(iii) of this section.

(iii) The control accessory shall be provided with a label for field installation as required by § 1211.17(c) through (g), including but not limited to § 1211.17(g)(2)(v).

Figure 6 to Subpart A of Part 1211 [Removed]

■ 11. Remove Figure 6 to Subpart A of Part 1211,

■ 12. Add Figures 6A through 6I to Subpart A of Part 1211 to read as follows:

BILLING CODE 6355–01–P

Figure 6A to Subpart A of Part 1211

Side View – Sectional Door

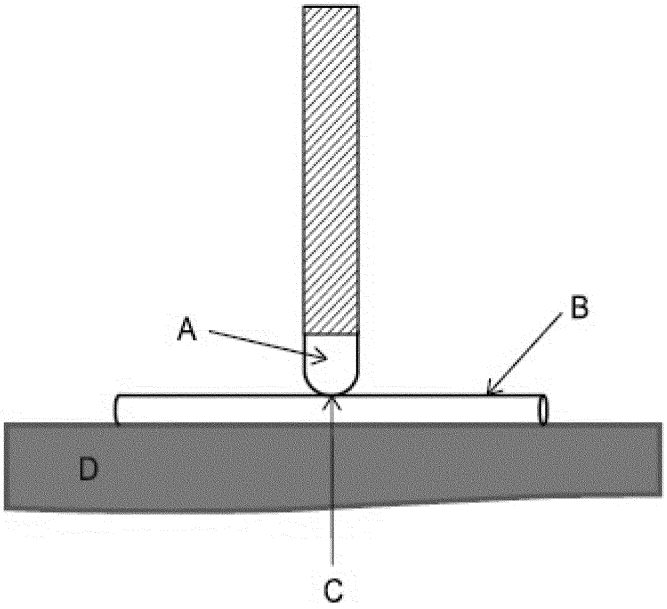

A – Edge Sensor
B – 1-7/8" Diameter Cylinder
C – 15 Pound Force
D – Ground/Floor

Figure 6B to Subpart A of Part 1211

Top View – Horizontally Moving Door

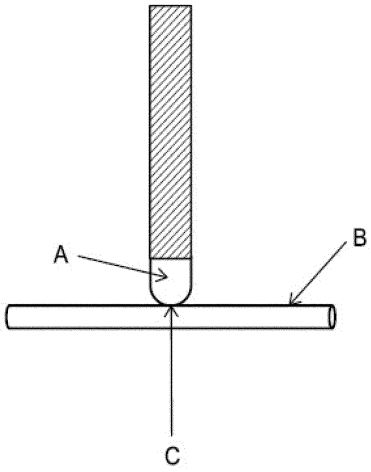

A – Edge Sensor
B – 1-7/8" Diameter Cylinder
C – 15 Pound Force

Figure 6C to Subpart A of Part 1211

Side View – Once-Piece Door

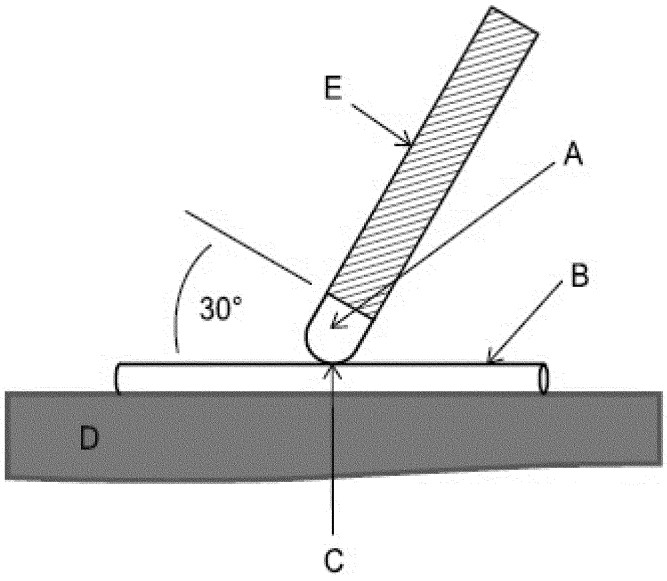

A – Edge Sensor
B – 1-7/8" Diameter Cylinder
C – 15 Pound Force
D – Ground/Floor
E – Outside Surface

Figure 6D to Subpart A of Part 1211

Top View – Horizontal Swing Door

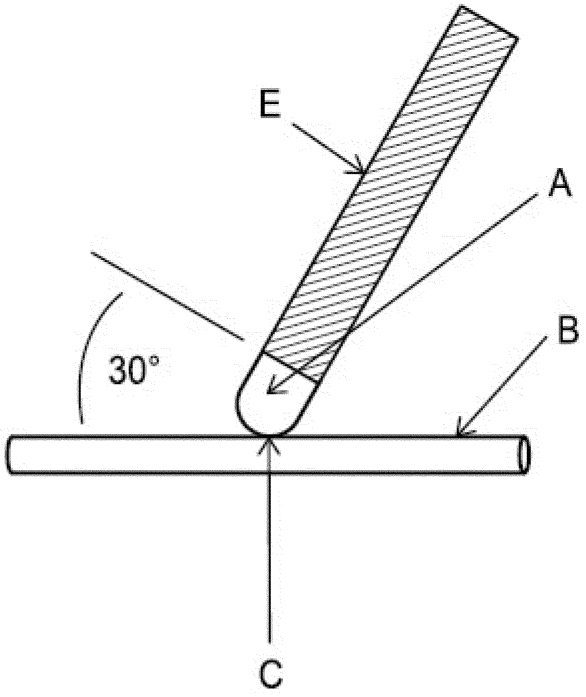

A – Edge Sensor
B – 1-7/8" Diameter Cylinder
C – 15 Pound Force
D – Ground/Floor
E – Outside Surface

Figure 6E to Subpart A of Part 1211

Top View – Horizontal Swing Door – Wraparound Edge

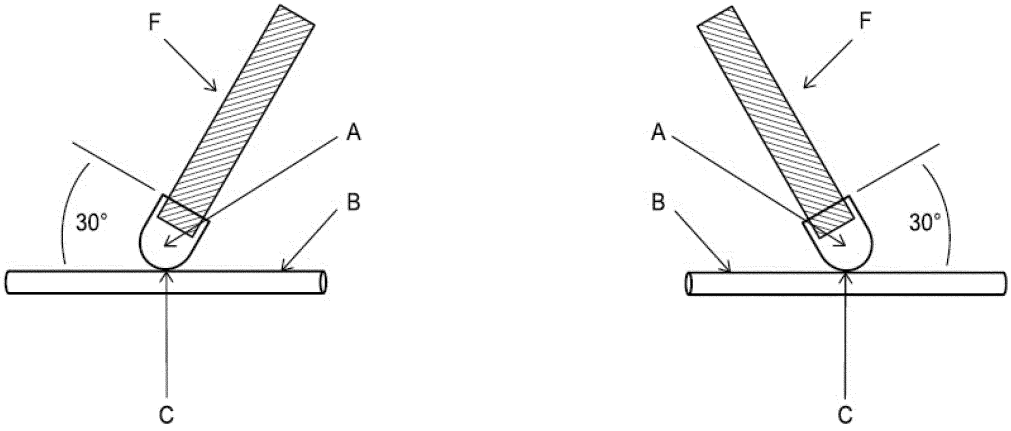

A – Edge Sensor
B – 1-7/8" Diameter Cylinder
C – 15 Pound Force
F – Direction of travel

Figure 6F to Subpart A of Part 1211

Front View – Sectional or One-Piece Door

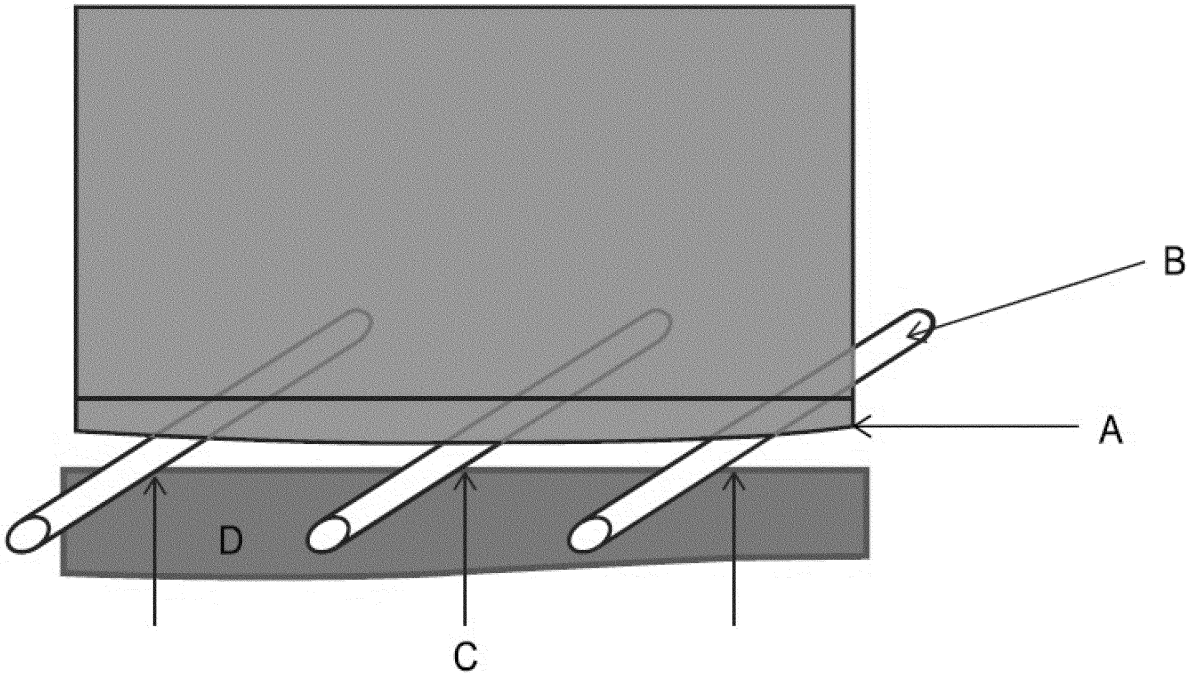

A – Edge Sensor
B – 1-7/8" Diameter Cylinder – At various heights, perpendicular or at 30 degree angle, depending on door type.
C – 15 Pound Force
D – Ground/Floor

Figure 6G to Subpart A of Part 1211

Side View – Horizontally Moving Door or Swinging Door

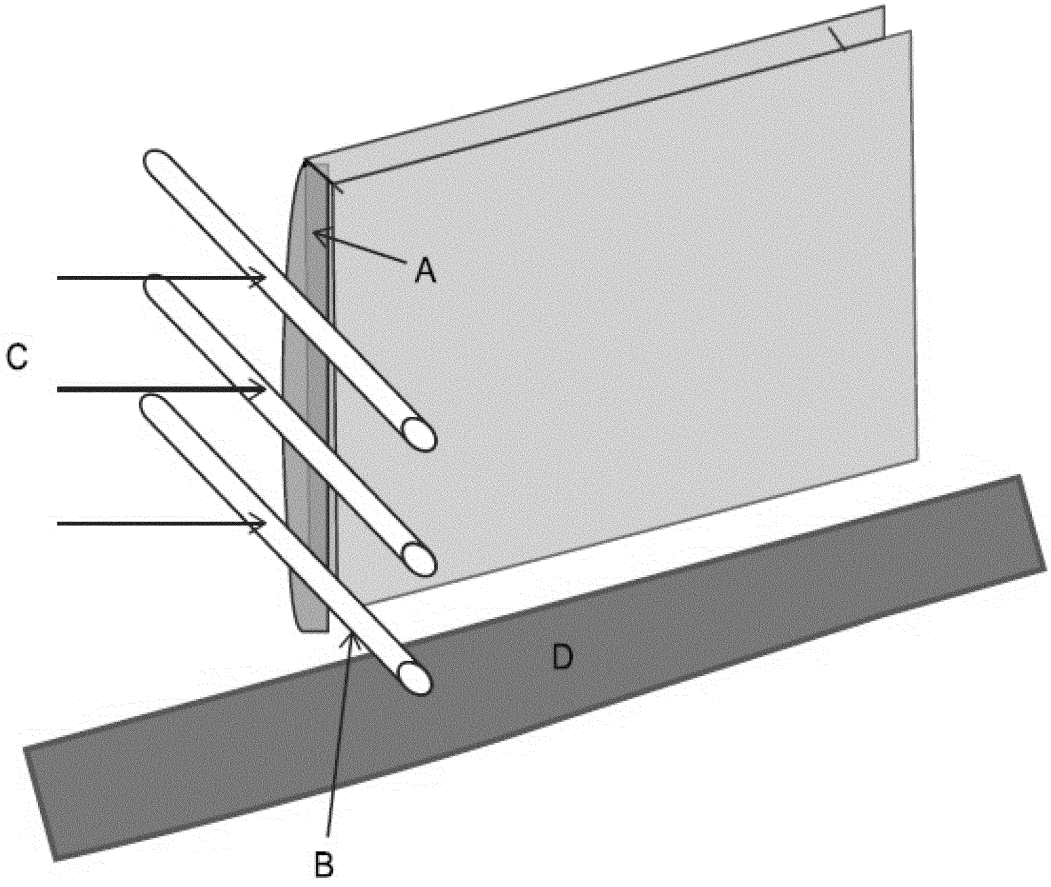

A – Edge Sensor
B – 1-7/8" Diameter Cylinder – At various heights, perpendicular or at 30 degree angle, depending on door type.
C – 15 Pound Force
D – Ground/Floor

Figure 6H to Subpart A of Part 1211

Front View – Vertically Moving Door or Swinging Door

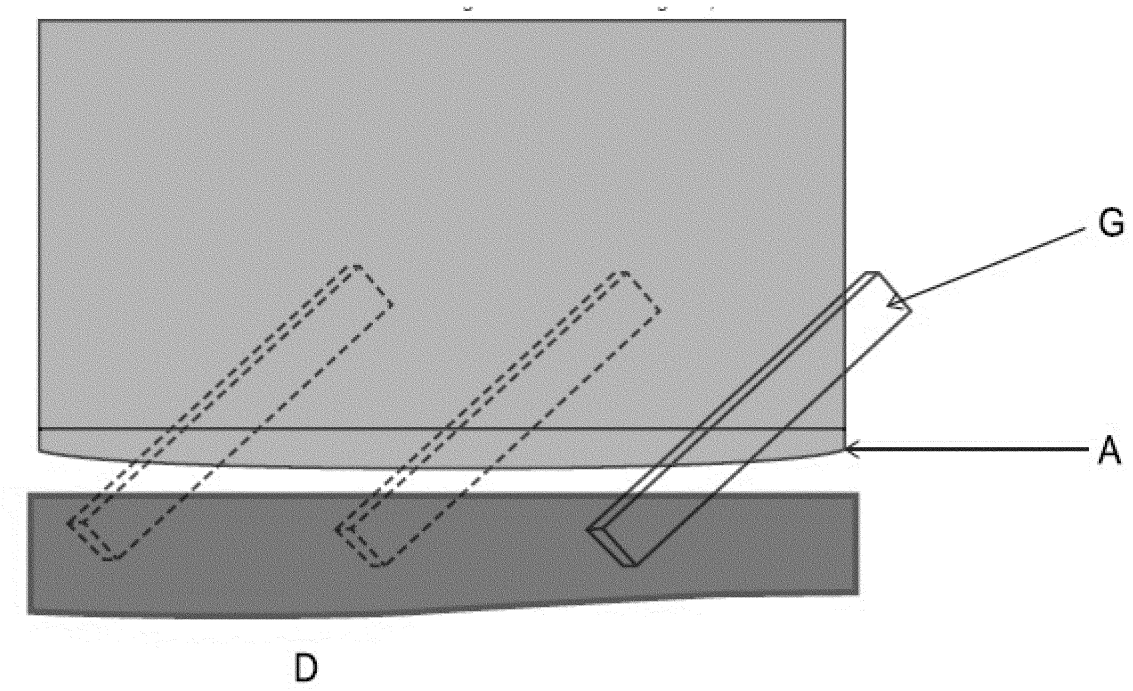

A – Edge Sensor
D – Ground/Floor
G – 1-5/8” x 3-1/2” solid object, min 6 in. long, placed at various locations along edge of door.

Figure 6I to Subpart A of Part 1211

Side View – Horizontally Moving Door

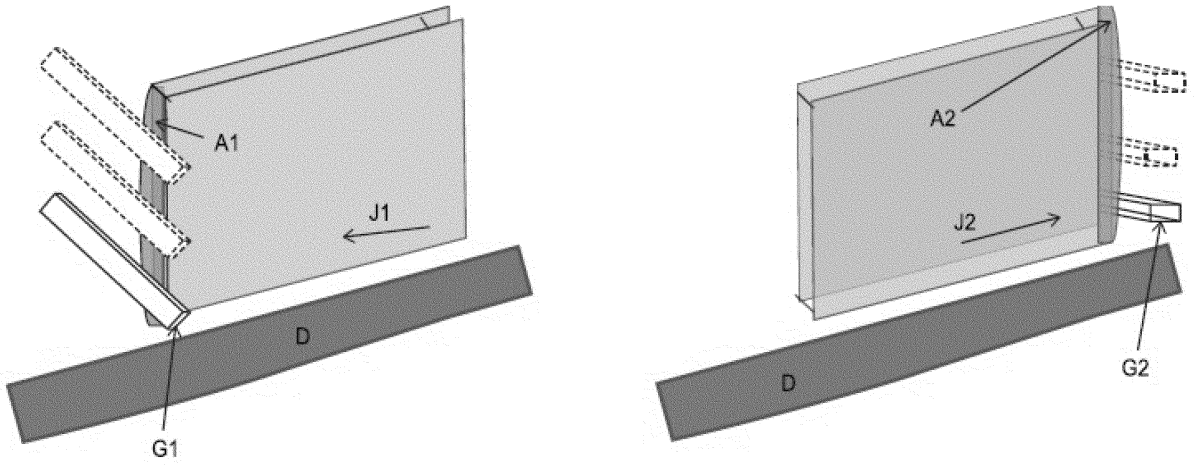

A1 – Edge Sensor on Leading Edge of Door
A2 – Edge Sensor on Trailing Edge of Door
D – Ground/Floor
G1 – 1-5/8" x 3-1/2" solid object, min 6 in. long, placed at various locations along leading edge of door.
G1 – 1-5/8" x 3-1/2" solid object, min 6 in. long, placed at various locations along trailing edge of door.
J1 – Movement when closing
J2 – Movement when opening

BILLING CODE 6355–01–C

Subpart D—[Amended]

■ 13. Amend § 1211.40 by redesignating paragraphs (d)(1) through (3) as (d)(2) through (4) and adding new paragraph (d)(1) to read as follows:

§ 1211.40 Incorporation by reference.

(d) * * *

(1) UL 325, Standard for Safety: Door, Drapery, Gate, Louver, and Window Operators and Systems, SUPPLEMENT SA—(Normative)—UL 60335–1/CAN/CSA–C22.2 No. 60335–1 Based Requirements for the Evaluation of Electronic Circuits, Seventh Edition, May 19, 2017, into §§ 1211.4 and 1211.5.

* * * * *

Alberta E. Mills,

Secretary, U. S. Consumer Product Safety Commission.

[FR Doc. 2018–14909 Filed 7–12–18; 8:45 am]

BILLING CODE 6355–01–P

DEPARTMENT OF JUSTICE

28 CFR Part 0

[Order No. 4212–2018]

Delegation Concerning International Prisoner Transfer Program

AGENCY: Department of Justice.

ACTION: Final rule.

SUMMARY: The Attorney General has delegated to the Assistant Attorney General for the Criminal Division certain authorities of the Attorney General concerning transfer of offenders to or from foreign countries, including the authority to find appropriate or inappropriate the transfer of offenders to or from a foreign country under certain treaties. The Assistant Attorney General for the Criminal Division is authorized to re-delegate this authority to the Deputy Assistant Attorneys General, the Director of the Office of Enforcement Operations, and the Senior Associate Director and Associate Directors of the Office of Enforcement Operations. The Department of Justice is moving the responsibility for handling international prisoner transfers from the Office of Enforcement Operations to the Office of International Affairs. Accordingly, this final rule amends the Code of Federal Regulations to authorize the Assistant Attorney General for the Criminal Division to re-delegate this authority within the Criminal Division to the Deputy Assistant Attorneys General in the Criminal Division, and to the Director, the Deputy Directors, and the Associate Director supervising the International Prisoner Transfer Unit of the Office of International Affairs.

DATES: This rule is effective July 13, 2018.

FOR FURTHER INFORMATION CONTACT: Vaughn Ary, Director, Office of International Affairs, Criminal Division, Department of Justice, Washington, DC 20005; 202–514–0000.

SUPPLEMENTARY INFORMATION: The Office of International Affairs (OIA) serves as the hub for international criminal law