AUTHENTICATED
U.S. GOVERNMENT
INFORMATION
GPO

FEDERAL REGISTER

Vol. 81 Tuesday,

No. 234 December 6, 2016

Pages 87801–88096

OFFICE OF THE FEDERAL REGISTER

The **FEDERAL REGISTER** (ISSN 0097–6326) is published daily, Monday through Friday, except official holidays, by the Office of the Federal Register, National Archives and Records Administration, Washington, DC 20408, under the Federal Register Act (44 U.S.C. Ch. 15) and the regulations of the Administrative Committee of the Federal Register (1 CFR Ch. I). The Superintendent of Documents, U.S. Government Publishing Office, Washington, DC 20402 is the exclusive distributor of the official edition. Periodicals postage is paid at Washington, DC.

The **FEDERAL REGISTER** provides a uniform system for making available to the public regulations and legal notices issued by Federal agencies. These include Presidential proclamations and Executive Orders, Federal agency documents having general applicability and legal effect, documents required to be published by act of Congress, and other Federal agency documents of public interest.

Documents are on file for public inspection in the Office of the Federal Register the day before they are published, unless the issuing agency requests earlier filing. For a list of documents currently on file for public inspection, see *www.ofr.gov.*

The seal of the National Archives and Records Administration authenticates the Federal Register as the official serial publication established under the Federal Register Act. Under 44 U.S.C. 1507, the contents of the **Federal Register** shall be judicially noticed.

The **Federal Register** is published in paper and on 24x microfiche. It is also available online at no charge at *www.fdsys.gov*, a service of the U.S. Government Publishing Office.

The online edition of the **Federal Register** is issued under the authority of the Administrative Committee of the Federal Register as the official legal equivalent of the paper and microfiche editions (44 U.S.C. 4101 and 1 CFR 5.10). It is updated by 6:00 a.m. each day the **Federal Register** is published and includes both text and graphics from Volume 59, 1 (January 2, 1994) forward. For more information, contact the GPO Customer Contact Center, U.S. Government Publishing Office. Phone 202-512-1800 or 866-512-1800 (toll free). E-mail, *gpocusthelp.com.*

The annual subscription price for the **Federal Register** paper edition is $749 plus postage, or $808, plus postage, for a combined **Federal Register, Federal Register** Index and List of CFR Sections Affected (LSA) subscription; the microfiche edition of the **Federal Register** including the **Federal Register** Index and LSA is $165, plus postage. Six month subscriptions are available for one-half the annual rate. The prevailing postal rates will be applied to orders according to the delivery method requested. The price of a single copy of the daily **Federal Register,** including postage, is based on the number of pages: $11 for an issue containing less than 200 pages; $22 for an issue containing 200 to 400 pages; and $33 for an issue containing more than 400 pages. Single issues of the microfiche edition may be purchased for $3 per copy, including postage. Remit check or money order, made payable to the Superintendent of Documents, or charge to your GPO Deposit Account, VISA, MasterCard, American Express, or Discover. Mail to: U.S. Government Publishing Office—New Orders, P.O. Box 979050, St. Louis, MO 63197-9000; or call toll free 1-866-512-1800, DC area 202-512-1800; or go to the U.S. Government Online Bookstore site, see *bookstore.gpo.gov.*

There are no restrictions on the republication of material appearing in the **Federal Register.**

How To Cite This Publication: Use the volume number and the page number. Example: 81 FR 12345.

Postmaster: Send address changes to the Superintendent of Documents, Federal Register, U.S. Government Publishing Office, Washington, DC 20402, along with the entire mailing label from the last issue received.

SUBSCRIPTIONS AND COPIES

PUBLIC

Subscriptions:

Paper or fiche	**202–512–1800**
Assistance with public subscriptions	**202–512–1806**
General online information	**202–512–1530; 1–888–293–6498**

Single copies/back copies:

Paper or fiche	**202–512–1800**
Assistance with public single copies	**1–866–512–1800 (Toll-Free)**

FEDERAL AGENCIES

Subscriptions:

Assistance with Federal agency subscriptions:

Email	*FRSubscriptions@nara.gov*
Phone	**202–741–6000**

Printed on recycled paper.

Contents

Federal Register

Vol. 81, No. 234

Tuesday, December 6, 2016

Agricultural Marketing Service
PROPOSED RULES
Imports:
Vegetable and Specialty Crop Import Regulations; and Other Clarifying Changes—Fruit, Vegetable, and Specialty Crop, 87849–87856
NOTICES
National Organic Programs:
Draft Guidance for Calculating the Percentage of Organic Ingredients in Multi-Ingredient Products, 87902–87903

Agriculture Department
See Agricultural Marketing Service
See Animal and Plant Health Inspection Service
See Grain Inspection, Packers and Stockyards Administration
RULES
Dairy Tariff-Rate Quota Import Licensing Program, 87801–87802
NOTICES
Agency Information Collection Activities; Proposals, Submissions, and Approvals, 87903–87904

Animal and Plant Health Inspection Service
NOTICES
Agency Information Collection Activities; Proposals, Submissions, and Approvals:
Export Health Certificate for Animal Products, 87904–87905
Standards for Privately Owned Quarantine Facilities for Ruminants, 87904

Centers for Disease Control and Prevention
NOTICES
Meetings:
Disease, Disability, and Injury Prevention and Control Special Emphasis Panel, 87938–87939
Tribal Caucus, Centers for Disease Control and Prevention/Agency for Toxic Substances and Disease Registry Tribal Advisory Committee, 87939

Children and Families Administration
RULES
Head Start Program, 87843–87844
NOTICES
ACF Program Instruction—Children's Justice Act, 87939–87940
Agency Information Collection Activities; Proposals, Submissions, and Approvals:
State Abstinence Education Program, 87940

Coast Guard
RULES
Drawbridge Operations:
Inner Harbor Navigation Canal, New Orleans, LA, 87812
Regulated Navigation Areas:
Portsmouth Naval Shipyard, Kittery, ME and Portsmouth, NH, 87813–87815

Commerce Department
See International Trade Administration
See National Oceanic and Atmospheric Administration

Commodity Futures Trading Commission
NOTICES
Meetings; Sunshine Act, 87910

Defense Department
PROPOSED RULES
Federal Acquisition Regulations:
Set-Asides under Multiple-Award Contracts, 88072–88095
NOTICES
Meetings:
Uniform Formulary Beneficiary Advisory Panel, 87910

Education Department
NOTICES
Agency Information Collection Activities; Proposals, Submissions, and Approvals:
Developing Hispanic-Serving Institutions Program Application, 87910–87911
Targeted Teacher Shortage Areas, 87911–87912

Energy Department
See Federal Energy Regulatory Commission
NOTICES
Records of Decisions:
Magnolia LNG, LLC; Application to Export Liquefied Natural Gas to Non-Free Trade Agreement Countries, 87915–87917
Recapitalization of Infrastructure Supporting Naval Spent Nuclear Fuel Handling at the Idaho National Laboratory, 87912–87915

Environmental Protection Agency
RULES
Air Quality State Implementation Plans; Approvals and Promulgations:
Kentucky; Infrastructure Requirements for the 2010 Sulfur Dioxide National Ambient Air Quality Standard, 87817–87819
Kentucky; Revisions to Louisville Definitions and Ambient Air Quality Standards, 87815–87817
Pennsylvania; Determination of Attainment of 2008 Ozone National Ambient Air Quality Standards; Pittsburgh-Beaver Valley, 87819–87820
Ocean Disposals:
Designation of a Dredged Material Disposal Site in Eastern Region of Long Island Sound; CT, 87820–87843
PROPOSED RULES
Air Quality State Implementation Plans; Approvals and Promulgations:
Nevada; Infrastructure Requirements to Address Interstate Transport for the 2008 Ozone NAAQS, 87857–87861
NOTICES
Determinations:
Appropriateness of the Model Year 2022–2025 Light-Duty Vehicle Greenhouse Gas Emissions Standards under the Midterm Evaluation, 87927–87928
General Permits:
Ocean Disposal of Marine Mammal Carcasses, 87928–87933

Proposed Agreements and Orders:
Consent for Certain CERCLA Response Activities by Tenant as Bona Fide Prospective Purchaser, 87934–87935
Receipt of Information under the Toxic Substances Control Act, 87934
Release of the Final Integrated Review Plan for the National Ambient Air Quality Standards for Particulate Matter, 87933–87934

Federal Aviation Administration
RULES
VOR Federal Airways V–235 and V–293 in the Vicinity of Cedar City, UT; Amendment, 87802–87803
PROPOSED RULES
Class E Airspace; Establishments:
Weed, CA, 87856–87857
NOTICES
Aeronautical Land-Use Assurances; Waivers:
Indianapolis International Airport, Indianapolis, IN, 87998–87999
Meetings:
Aviation Rulemaking Advisory Committee, 87999–88000
Noise Exposure Maps:
Lehigh Valley International Airport, Allentown, PA, 88000–88001

Federal Communications Commission
PROPOSED RULES
Petitions for Reconsideration of Action in Rulemaking Proceeding, 87861–87862
NOTICES
Meetings:
Communications Security, Reliability, and Interoperability Council, 87935

Federal Energy Regulatory Commission
NOTICES
Applications:
Dominion Cove Point LNG, LP, 87921
UGI LNG, Inc., 87920–87921
Complaints:
Independent Market Monitor for PJM v. American Electric Power Service Corp., 87919–87920
Independent Market Monitor for PJM v. PJM Interconnection, LLC, 87918
Declaratory Orders; Petitions:
Idaho Power Co., 87917–87918
Environmental Assessments; Availability, etc.:
ANR Pipeline Co.; Wisconsin South Expansion Project, 87922–87924
Environmental Impact Statements; Availability, etc.:
NEXUS Gas Transmission, LLC, Texas Eastern Transmission, LP, et al., NEXUS Gas Transmission Project and Texas Eastern Appalachian Lease Project, 87918–87919
Environmental Reviews:
Columbia Gas Transmission, LLC, Columbia Gulf Transmission, LLC; Mountaineer XPress Project, Gulf XPress Project, 87926
Hydroelectric Applications:
BMB Enterprises, Inc., 87925–87926
Brookfield White Pine Hydro, LLC, 87922
Meetings:
Tennessee Gas Pipeline Co., LLC, Lone Star Project, 87926–87927
Requests under Blanket Authorizations:
Columbia Gas Transmission, LLC, 87924–87925
Southwest Gas Storage Co., 87919

Federal Railroad Administration
PROPOSED RULES
Passenger Equipment Safety Standards:
Alternative Compliance and High-Speed Trainsets, 88006–88069
NOTICES
Agency Information Collection Activities; Proposals, Submissions, and Approvals, 88001–88002

Federal Reserve System
NOTICES
Changes in Bank Control:
Acquisitions of Shares of a Bank or Bank Holding Company, 87935–87936
Formations of, Acquisitions by, and Mergers of Bank Holding Companies, 87935

Federal Trade Commission
NOTICES
Agency Information Collection Activities; Proposals, Submissions, and Approvals, 87936–87938

Fish and Wildlife Service
NOTICES
Stock Assessment Reports:
Southern Sea Otter in California, 87951–87954

Food and Drug Administration
RULES
Medical Devices:
Neurological Devices; Classification of the Computerized Cognitive Assessment Aid for Concussion, 87810–87812

General Services Administration
PROPOSED RULES
Federal Acquisition Regulations:
Set-Asides under Multiple-Award Contracts, 88072–88095

Grain Inspection, Packers and Stockyards Administration
NOTICES
Requests for Nominations:
USDA Grain Inspection Advisory Committee, 87905–87906

Gulf Coast Ecosystem Restoration Council
NOTICES
Initial Funded Priorities List, 87938

Health and Human Services Department
See Centers for Disease Control and Prevention
See Children and Families Administration
See Food and Drug Administration
See National Institutes of Health
NOTICES
Federal Financial Participation in State Assistance Expenditures; Federal Matching Shares for Medicaid, the State Children's Health Insurance Program, and Aid to Needy Aged, Blind, or Disabled Persons for October 1, 2017 through September 30, 2018; Correction, 87941

Homeland Security Department
See Coast Guard
See Transportation Security Administration
See U.S. Customs and Border Protection

Housing and Urban Development Department
RULES
Violence Against Women Reauthorization Act of 2013:
Implementation in HUD Housing Programs; Correction, 87812
NOTICES
Guidance:
Housing Opportunity through Modernization Act of 2016; Correction, 87949
Program Evaluation Policy, 87949–87951
Tribal HUD-VA Supportive Housing Program; Technical Correction, 87948–87949

Interior Department
See Fish and Wildlife Service
See Land Management Bureau
See Surface Mining Reclamation and Enforcement Office

International Trade Administration
NOTICES
Antidumping or Countervailing Duty Investigations, Orders, or Reviews:
Certain Steel Nails from Malaysia, 87907–87909
Honey from the People's Republic of China, 87906–87907

Justice Department
NOTICES
Agency Information Collection Activities; Proposals, Submissions, and Approvals:
2014–2016 Survey of State Criminal History Information Systems, 87956–87957
2016–2018 Survey of Sexual Victimization, 87957–87958

Land Management Bureau
NOTICES
Environmental Impact Statements; Availability, etc.:
Tri-State Fuel Breaks Project, Owyhee County, ID, and Malheur County, OR, 87954–87956

National Aeronautics and Space Administration
PROPOSED RULES
Federal Acquisition Regulations:
Set-Asides under Multiple-Award Contracts, 88072–88095

National Institutes of Health
NOTICES
Government-Owned Inventions; Availability for Licensing, 87942–87943
Meetings:
Eunice Kennedy Shriver National Institute of Child Health and Human Development, 87941–87943
National Institute of Dental and Craniofacial Research, 87942
National Institute on Aging, 87941

National Oceanic and Atmospheric Administration
RULES
Delays:
Discharge Requirements for U.S. Coast Guard Activities in Greater Farallones and Cordell Bank National Marine Sanctuaries, 87803–87804
Fisheries of the Northeastern United States:
Atlantic Bluefish Fishery; Commercial Quota Harvested for the State of New York, 87844
Fisheries Off West Coast States:
Modifications of the West Coast Commercial and Recreational Salmon Fisheries; Inseason Actions 6 through 21, 87845–87848
PROPOSED RULES
Fisheries of the Exclusive Economic Zone Off Alaska:
Bering Sea and Aleutian Islands; 2017 and 2018 Harvest Specifications for Groundfish, 87863–87881
Gulf of Alaska; 2017 and 2018 Harvest Specifications for Groundfish, 87881–87901
Fisheries of the Northeastern United States:
Amendment 18 to the Northeast Multispecies Fishery Management Plan, 87862–87863
NOTICES
Agency Information Collection Activities; Proposals, Submissions, and Approvals, 87909–87910
Meetings:
Marine Fisheries Advisory Committee; Correction, 87909

Nuclear Regulatory Commission
NOTICES
Facility Operating and Combined Licenses:
Applications and Amendments Involving No Significant Hazards Considerations; Biweekly Notice, 87964–87978
Applications and Amendments Involving Proposed No Significant Hazards Considerations, etc., 87958–87964
Guidance:
Program-Specific Guidance about Medical Use Licenses, 87978–87979
Meetings; Sunshine Act, 87979–87980

Postal Regulatory Commission
NOTICES
New Postal Products, 87980–87981

Science and Technology Policy Office
NOTICES
Requests for Information:
Framework for a Federal Strategic Plan for Soil Science, 87981

Securities and Exchange Commission
NOTICES
Meetings; Sunshine Act, 87989–87990, 87993
Self-Regulatory Organizations; Proposed Rule Changes:
Bats BYX Exchange, Inc., 87993–87995
BOX Options Exchange LLC, 87991–87993
Miami International Securities Exchange LLC, 87990–87991
The Nasdaq Stock Market LLC, 87981–87984, 87995–87997
The Options Clearing Corp., 87984–87989

State Department
NOTICES
Determinations under the International Religious Freedom Act, 87997

Surface Mining Reclamation and Enforcement Office
NOTICES
Agency Information Collection Activities; Proposals, Submissions, and Approvals, 87956

Surface Transportation Board
NOTICES
Abandonment Exemptions:
Southwest Pennsylvania Railroad Company; Fayette County, PA, 87997–87998

Transportation Department
See Federal Aviation Administration

See Federal Railroad Administration

Transportation Security Administration
NOTICES
Agency Information Collection Activities; Proposals, Submissions, and Approvals:
Travel Request and Expense Report Form for TSA Contractors, 87947–87948

Treasury Department
RULES
Import Restrictions:
Certain Archaeological and Ethnological Materials from the Plurinational State of Bolivia, 87804–87805
Certain Archaeological Material from Egypt, 87805–87810
NOTICES
Agency Information Collection Activities; Proposals, Submissions, and Approvals, 88002–88004
Survey of U.S. Ownership of Foreign Securities as of December 31, 2016, 88003

U.S. Customs and Border Protection
RULES
Import Restrictions:
Certain Archaeological and Ethnological Materials from the Plurinational State of Bolivia, 87804–87805
Certain Archaeological Material from Egypt, 87805–87810
NOTICES
Commercial Gaugers and Laboratories; Accreditations and Approvals:
AmSpec Services, LLC, 87944–87945
Camin Cargo Control, Inc., 87943–87944, 87946–87947
Chem Gas International LLC, 87946
SGS North America, Inc., 87945

Separate Parts In This Issue

Part II
Transportation Department, Federal Railroad Administration, 88006–88069

Part III
Defense Department, 88072–88095
General Services Administration, 88072–88095
National Aeronautics and Space Administration, 88072–88095

Reader Aids

Consult the Reader Aids section at the end of this issue for phone numbers, online resources, finding aids, and notice of recently enacted public laws.

To subscribe to the Federal Register Table of Contents electronic mailing list, go to https://public.govdelivery.com/accounts/USGPOOFR/subscriber/new, enter your e-mail address, then follow the instructions to join, leave, or manage your subscription.

CFR PARTS AFFECTED IN THIS ISSUE

A cumulative list of the parts affected this month can be found in the Reader Aids section at the end of this issue.

7 CFR
6 87801
Proposed Rules:
944 87849
980 87849
999 87849
14 CFR
71 87802
Proposed Rules:
71 87856
15 CFR
922 87803
19 CFR
12 (2 documents) 87804, 87805
21 CFR
882 87810
24 CFR
5 87812
91 87812
92 87812
93 87812
200 87812
247 87812
574 87812
576 87812
578 87812
880 87812
882 87812
883 87812
884 87812
886 87812
891 87812
905 87812
960 87812
966 87812
982 87812
983 87812
33 CFR
117 87812
165 87813
40 CFR
52 (3 documents) 87815, 87817, 87819
228 87820
Proposed Rules:
52 87857
45 CFR
1302 87843
47 CFR
Proposed Rules:
54 87861
48 CFR
Proposed Rules:
2 88072
4 88072
7 88072
8 88072
9 88072
10 88072
13 88072
15 88072
16 88072
19 88072
42 88072
52) 88072
49 CFR
Proposed Rules:
236 88006
238 88006
50 CFR
648 87844
660 87845
Proposed Rules:
648 87862
679 (2 documents) 87863, 87881

Rules and Regulations

Federal Register

Vol. 81, No. 234

Tuesday, December 6, 2016

This section of the FEDERAL REGISTER contains regulatory documents having general applicability and legal effect, most of which are keyed to and codified in the Code of Federal Regulations, which is published under 50 titles pursuant to 44 U.S.C. 1510.

The Code of Federal Regulations is sold by the Superintendent of Documents. Prices of new books are listed in the first FEDERAL REGISTER issue of each week.

DEPARTMENT OF AGRICULTURE

7 CFR Part 6

RIN 0551–AA82

Dairy Tariff-Rate Quota Import Licensing Program

AGENCY: Foreign Agricultural Service, USDA.

ACTION: Final rule, technical amendment.

SUMMARY: This final rule amends the Dairy Tariff-Rate Quota Import Licensing Program to clarify that for the purposes of the Dairy Tariff-Rate Quota Import Licensing Program, U.S. Customs and Border Protection import entries submitted electronically, as well as on paper, are acceptable.

DATES: *Effective Date:* December 6, 2016.

FOR FURTHER INFORMATION CONTACT: Contact Ron Lord, Director, Import Policies and Export Reporting Division, Foreign Agricultural Service, 1400 Independence Avenue SW., Washington, DC 20250, STOP 1021, email at *Ronald.Lord@usda.gov* or telephone (202) 720–6939.

SUPPLEMENTARY INFORMATION:

Background

The Security and Accountability for Every Port Act of 2006 (SAFE Port Act) (Pub. L. 109–347) requires that all Federal agencies that require documentation for clearing or licensing the importation and exportation of cargo to participate in the International Trade Data System (ITDS). The ITDS is a government-wide project that, in implementing the SAFE Port Act, will allow businesses to electronically submit the data required by U.S. Customs and Border Protection (CBP) and its Partner Government Agencies (PGAs) through the Automated Commercial Environment (ACE). Executive Order 13659, Streamlining the Export/Import Process for America's Businesses, signed on February 19, 2014, requires that all Federal agencies complete their program and regulatory changes to comply with the SAFE Port Act by December 31, 2016.

Because the SAFE Port Act requires Federal agencies to accept electronic data, FAS finds under the good cause exception of the Administrative Procedure Act, 5 U.S.C. 553(b)(3)(B), that the notice and comment process is unnecessary to make this technical amendment and is publishing this rule as a final rule without requesting comments.

The current Dairy Tariff-Rate Quota Import Licensing Program regulation at 7 CFR 6.29 requires licensed importers to present certain documents at the time of CBP entry. To comply with the SAFE Port Act, this final rule amends the Dairy Tariff-Rate Quota Import Licensing Program regulation to permit the CBP entry of items requiring a dairy license by utilizing electronic, as well as paper documentation. No other changes are made to the regulation.

Executive Order 12866

The final rule has been determined to be non-significant under E.O. 12866 and has been reviewed by the Office of Management and Budget.

Regulatory Flexibility Act

The Regulatory Flexibility Act ensures that regulatory and information requirements are tailored to the size and nature of small businesses, small organizations, and small governmental jurisdictions. This final rule will not have a significant economic impact on small businesses participating in the program.

Executive Order 12988

This final rule has been reviewed under Executive Order 12988. The provisions of this final rule would not have a preemptive effect with respect to any State or local laws, regulations, or policies which conflict with such provision or which otherwise impede their full implementation. The final rule would not have a retroactive effect. Before any judicial action may be brought forward regarding this final rule, all administrative remedies must be exhausted.

National Environmental Policy Act

The Administrator has determined that this action will not have a significant effect on the quality of the human environment. Therefore, neither an Environmental Assessment nor an Environmental Impact Statement is necessary for this final rule.

Unfunded Mandates Reform Act (Pub. L. 104–4)

Public Law 104–4 requires consultation with state and local officials and Indian tribal governments. This final rule does not impose an unfunded mandate or any other requirement on state, local, or tribal governments. Accordingly, these programs are not subject to the provisions of the Unfunded Mandates Reform Act.

Executive Order 12630

This Order requires careful evaluation of governmental actions that interfere with constitutionally protected property rights. This final rule would not interfere with any property rights and, therefore, does not need to be evaluated on the basis of the criteria outlined in Executive Order 12630.

Government Paperwork Elimination Act

FAS is committed to compliance with the Government Paperwork Elimination Act, which requires Government agencies, in general, to provide the public the option of submitting information or transacting business electronically to the maximum extent possible.

Delegation From the Office of the Secretary

The Foreign Agricultural Service has been delegated authority to exercise the Department's responsibilities with respect to tariff-rate quotes for dairy products under chapter 4 of the Harmonized Tariff Schedule of the United States (7 CFR 2.43(a)(12)).

List of Subjects in 7 CFR Part 6

Agricultural commodities, Dairy, Cheese, Imports, Procedural rules, Application requirements, Tariff-rate quota, Reporting and recordkeeping requirements.

For the reasons described in the background, FAS is amending 7 CFR part 6 as follows:

PART 6—IMPORT QUOTAS AND FEES

Subpart—Dairy Tariff-Rate Quota Import Licensing

■ 1. The authority citation for Subpart—Dairy Tariff-Rate Quota Import Licensing continues to read as follows:

Authority: Additional U.S. Notes 6, 7, 8, 12, 14, 16–23 and 25 to Chapter 4 and General Note 15 of the Harmonized Tariff Schedule of the United States (19 U.S.C. 1202), Pub. L. 97–258, 96 Stat. 1051, as amended (31 U.S.C. 9701), and secs. 103 and 404, Pub. L. 103–465, 108 Stat. 4819 (19 U.S.C. 3513 and 3601).

■ 2. Revise § 6.29(c), (d), and (e) to read as follows:

§ 6.29 Use of licenses.

* * * * *

(c) If the article entered or withdrawn from warehouse for consumption was purchased by the licensee through a direct sale from a foreign supplier, the licensee shall present the following documents or their authorized electronic equivalent, when available, at the time of entry:

(1) A true and correct copy of a through bill of lading from the country; and

(2) A commercial invoice or bill of sale from the seller, showing the quantity and value of the product, the date of purchase and the country; or

(3) Where the article was entered into warehouse by the foreign supplier, CBP Form 7501 endorsed by the foreign supplier, and the commercial invoice.

(d) If the article entered was purchased by the licensee via sale-in-transit, the licensee shall present the following documents or their authorized electronic equivalent, when available, at the time of entry:

(1) A true and correct copy of a through bill of lading endorsed by the original consignee of the goods;

(2) A certified copy of the commercial invoice or bill of sale from the foreign supplier to the original consignee of the goods; and

(3) A commercial invoice or bill of sale from the original consignee to the licensee.

(e) If the article entered was purchased by the licensee in warehouse, the licensee shall present the following documents or their authorized electronic equivalent, when available, at the time of entry:

(1) CBP Form 7501 endorsed by the original consignee of the goods;

(2) A certified copy of the commercial invoice or bill of sale from the foreign supplier to the original consignee of the goods; and

(3) A commercial invoice or bill of sale from the original consignee to the licensee.

* * * * *

Dated: October 19, 2016.

Bryce Quick,

Acting Administrator, Foreign Agricultural Service.

[FR Doc. 2016–28384 Filed 12–5–16; 8:45 am]

BILLING CODE 3410–10–P

DEPARTMENT OF TRANSPORTATION

Federal Aviation Administration

14 CFR Part 71

[Docket No. FAA–2016–9265; Airspace Docket No. 16–ANM–11]

RIN 2120–AA66

Amendment of VOR Federal Airways V–235 and V–293 in the Vicinity of Cedar City, Utah

AGENCY: Federal Aviation Administration (FAA), DOT.

ACTION: Final rule.

SUMMARY: This action amends the legal description of the Very High Frequency Omnidirectional Range (VOR) Federal airways V–235 and V–293 in the vicinity of Cedar City, UT. The FAA is taking this action because the Cedar City VOR/DME, included as part of the V–235 and V–293 route structure, is being renamed the Enoch VOR/DME.

DATES: Effective date 0901 UTC, March 2, 2017. The Director of the Federal Register approves this incorporation by reference action under title 1, Code of Federal Regulations, part 51, subject to the annual revision of FAA, Order 7400.11 and publication of conforming amendments.

ADDRESSES: FAA Order 7400.11A, Airspace Designations and Reporting Points, and subsequent amendments can be viewed online at *http://www.faa.gov/air_traffic/publications/.* For further information, you can contact the Airspace Policy Group, Federal Aviation Administration, 800 Independence Avenue SW., Washington, DC 20591; telephone: (202) 267–8783. The Order is also available for inspection at the National Archives and Records Administration (NARA). For information on the availability of FAA Order 7400.11A at NARA, call (202) 741–6030, or go to *http://www.archives.gov/federal_register/code_of_federal-regulations/ibr_locations.html.*

FAA Order 7400.11, Airspace Designations and Reporting Points, is published yearly and effective on September 15.

FOR FURTHER INFORMATION CONTACT: Kenneth Ready, Airspace Policy Group, Office of Airspace Services, Federal Aviation Administration, 800 Independence Avenue SW., Washington, DC 20591; telephone: (202) 267–8783.

SUPPLEMENTARY INFORMATION:

Authority for This Rulemaking

The FAA's authority to issue rules regarding aviation safety is found in Title 49 of the United States Code. Subtitle I, Section 106 describes the authority of the FAA Administrator. Subtitle VII, Aviation Programs, describes in more detail the scope of the agency's authority. This rulemaking is promulgated under the authority described in Subtitle VII, Part A, Subpart I, Section 40103. Under that section, the FAA is charged with prescribing regulations to assign the use of the airspace necessary to ensure the safety of aircraft and the efficient use of airspace. This regulation is within the scope of that authority as it modifies the air traffic service route structure in the north central United States to maintain the efficient flow of air traffic.

Availability and Summary of Documents for Incorporation by Reference

This document amends FAA Order 7400.11A, Airspace Designations and Reporting Points, dated August 3, 2016, and effective September 15, 2016. FAA Order 7400.11A is publicly available as listed in the **ADDRESSES** section of this document. FAA Order 7400.11A lists Class A, B, C, D, and E airspace areas, air traffic service routes, and reporting points.

The Rule

This action amends Title 14 Code of Federal Regulations (14 CFR) part 71 by amending the legal description of VOR Federal airways V–235 and V–293, in the vicinity of Cedar City, UT. Currently, V–235 and V–293 have Cedar City, UT, [VOR/DME] included as part of their route structure. The Cedar City VOR and the Cedar City Airport share the same name, but are not co-located and are greater than 5 nautical miles apart. To eliminate the possibility of confusion, and a potential flight safety issue, the Cedar City VOR/DME is renamed the Enoch VOR/DME; and will have a new facility identifier (ENK). Airways with Cedar City, UT, [VOR/DME] included in their legal descriptions will be amended to reflect the name change. The name change of

the VOR/DME will coincide with the effective date of this rulemaking action.

Domestic VOR Federal airways are published in paragraph 6010(a) of FAA Order 7400.11A dated August 3, 2016 and effective September 15, 2016, which is incorporated by reference in 14 CFR 71.1. The Domestic VOR Federal airways listed in this document will be published subsequently in the Order.

Since this action merely involves editorial changes in the legal description of a VOR Federal airway, and does not involve a change in the dimensions or operating requirements of that airspace, notice and public procedure under 5 U.S.C. 553(b) are unnecessary.

Regulatory Notices and Analyses

The FAA has determined that this regulation only involves an established body of technical regulations for which frequent and routine amendments are necessary to keep them operationally current. It, therefore: (1) Is not a ''significant regulatory action'' under Executive Order 12866; (2) is not a ''significant rule'' under Department of Transportation (DOT) Regulatory Policies and Procedures (44 FR 11034; February 26, 1979); and (3) does not warrant preparation of a regulatory evaluation as the anticipated impact is so minimal. Since this is a routine matter that only affects air traffic procedures and air navigation, it is certified that this rule, when promulgated, does not have a significant economic impact on a substantial number of small entities under the criteria of the Regulatory Flexibility Act.

Environmental Review

The FAA has determined that this action qualifies for categorical exclusion under the National Environmental Policy Act, and its agency implementing regulations in FAA Order 1050.1F, ''Environmental Impacts: Policies and Procedures'' regarding categorical exclusions for procedural actions at paragraph 5–6.5a, which categorically excludes from full environmental impact review actions that are rulemaking actions that designate or modify classes of airspace areas, airways, routes, and reporting points (see 14 CFR part 71, Designation of Class A, B, C, D, and E Airspace areas; Air Traffic Service Routes; and Reporting Points). This name change action which amends the legal description of the Very High Frequency Omnidirectional Range (VOR) Federal Airways V–235 and V–293 in the vicinity of Cedar City, UT is not expected to cause any potentially significant environmental impacts. In accordance with FAAO 1050.1F, paragraph 5–2 regarding Extraordinary Circumstances, this action has been reviewed for factors and circumstances in which a normally categorically excluded action may have a significant environmental impact requiring further analysis, and it is determined that no extraordinary circumstances exist that warrant preparation of an environmental assessment.

Lists of Subjects in 14 CFR Part 71

Airspace, Incorporation by reference, Navigation (air).

Adoption of the Amendment

In consideration of the foregoing, the Federal Aviation Administration amends 14 CFR part 71 as follows:

PART 71—DESIGNATION OF CLASS A, B, C, D, AND E AIRSPACE AREAS; AIR TRAFFIC SERVICE ROUTES; AND REPORTING POINTS

■ 1. The authority citation for part 71 is amended to read as follows:

Authority: 49 U.S.C. 106(f), 106(g); 40103, 40113, 40120; E.O. 10854, 24 FR 9565, 3 CFR, 1959–1963 Comp., p.389

§ 71.1 [Amended]

■ 2. The incorporation by reference in 14 CFR 71.1 of FAA Order 7400.11A, Airspace Designations and Reporting Points, dated August 3, 2016 and effective September 15, 2016, is amended as follows:

Paragraph 6010(a) Domestic VOR Federal Airways.

* * * * *

V–235 [Amended]

From Peach Springs, AZ; Mormon Mesa, NV, via INT Mormon Mesa 059° and Enoch, UT, 197° radials; Enoch; Milford, UT; Delta, UT; Fairfield, UT; 10 miles, 15 miles, 135 MSL, 46 miles, 125 MSL; Fort Bridger, WY. From Rock Springs, WY; 20 miles, 41 miles, 92 MSL, 37 miles, 107 MSL; Muddy Mountain, WY; to Newcastle, WY.

* * * * *

V–293 [Amended]

From Grand Canyon, AZ, via Page, AZ; INT Page 340° and Bryce Canyon, UT; 120° radials; Bryce Canyon; Enoch, UT; 37 miles, 108 MSL Wilson Creek, NV; 5 miles, 108 MSL, 37 miles, 115 MSL, Ely, NV; 125 MSL Bullion, NV; 28 miles, 57 miles, 99 MSL, Twin Falls, ID; 37 miles, 33 miles, 87 MSL, 76 miles, 113 MSL, 99 MSL Donnelly, ID.

* * * * *

Issued in Washington, DC, November 29, 2016.

Leslie M. Swann,

Acting Manager, Airspace Policy Group.

[FR Doc. 2016–29143 Filed 12–5–16; 8:45 am]

BILLING CODE 4910–13–P

DEPARTMENT OF COMMERCE

National Oceanic and Atmospheric Administration

15 CFR Part 922

[Docket Number 160413330–6330–01]

RIN 0648–BF99

Delay of Discharge Requirements for U.S. Coast Guard Activities in Greater Farallones and Cordell Bank National Marine Sanctuaries

AGENCY: Office of National Marine Sanctuaries (ONMS), National Ocean Service (NOS), National Oceanic and Atmospheric Administration (NOAA), Department of Commerce (DOC).

ACTION: Final rule; delay of effectiveness for discharge requirements with regard to U.S. Coast Guard activities.

SUMMARY: The National Oceanic and Atmospheric Administration (NOAA) expanded the boundaries of Gulf of the Farallones National Marine Sanctuary (now renamed Greater Farallones National Marine Sanctuary or GFNMS) and Cordell Bank National Marine Sanctuary (CBNMS) to an area north and west of their previous boundaries with a final rule published on March 12, 2015. The final rule entered into effect on June 9, 2015. At that time, NOAA postponed the effectiveness of the discharge requirements in both sanctuaries' regulations in the areas added to GFNMS and CBNMS boundaries in 2015 with regard to U.S. Coast Guard activities for 6 months. Since then, NOAA published two notices to extend the postponement of the discharge requirements to provide adequate time for completion of an environmental assessment, and subsequent rulemaking, as appropriate. This extension would end on December 9, 2016. This document extends the postponement of the discharge requirements for these activities for another 6 months for the same reasons.

DATES: The effectiveness for the discharge requirements in both CBNMS and GFNMS expansion areas with regard to U.S. Coast Guard activities is June 9, 2017.

ADDRESSES: Copies of the FEIS, final management plans, and the final rule published on March 12, 2015, can be viewed or downloaded at *http://farallones.noaa.gov/manage/expansion_cbgf.html.*

FOR FURTHER INFORMATION CONTACT: Maria Brown, Greater Farallones National Marine Sanctuary Superintendent, at *Maria.Brown@noaa.gov* or 415–561–6622.

SUPPLEMENTARY INFORMATION:

I. Background

On March 12, 2015, NOAA expanded the boundaries of Gulf of the Farallones National Marine Sanctuary (now renamed Greater Farallones National Marine Sanctuary or GFNMS) and Cordell Bank National Marine Sanctuary (CBNMS) to an area north and west of their previous boundaries with a final rule (80 FR 13078). The final rule entered into effect on June 9, 2015 (80 FR 34047). To ensure that the March 12, 2015, rule does not undermine USCG's ability to perform its duties, at that time, NOAA postponed the effectiveness of the discharge requirements in both sanctuaries' regulations with regard to U.S. Coast Guard (USCG) activities for 6 months. Two additional six month postponements of the effectiveness of the discharge requirements were published in the **Federal Register** on December 1, 2015 (80 FR 74985) and May 31, 2016 (81 FR 34268), to provide adequate time for completion of an environmental assessment and to determine NOAA's next steps. Without further NOAA action, the discharge regulations would become effective with regard to USCG activities December 9, 2016. However, NOAA needs more time to develop alternatives for an environmental assessment developed pursuant to the requirements of the National Environmental Policy Act. Therefore, this notice postpones the effectiveness of the discharge requirements in the expansion areas of both sanctuaries with regard to USCG activities for another 6 months, until June 9, 2017. During this time, NOAA will continue to consider how to address USCG's concerns and, among other things, whether to exempt certain USCG activities in sanctuary regulations. The public, other federal agencies, and interested stakeholders will be given an opportunity to comment on various alternatives that are being considered. This will include the opportunity to review any proposed rule and related environmental analysis. In the course of the rule making to expand GFNMS and CBNMS, NOAA learned from USCG that the discharge regulations had the potential to impair the operations of USCG vessels and air craft conducting law enforcement and on-water training exercises in GFNMS and CBNMS. The USCG supports national marine sanctuary management by providing routine surveillance and dedicated law enforcement of the National Marine Sanctuaries Act and sanctuary regulations.

II. Classification

A. National Environmental Policy Act

NOAA previously conducted an environmental analysis under the National Environmental Policy Act (NEPA) as part of the rulemaking process leading to the expansion of CBNMS and GFNMS, which addressed regulations regarding the discharge of any matter or material in the sanctuaries. The environmental impacts of the decision to postpone effectiveness reflect a continuation of the environmental baseline and the no action alternative presented in that analysis. Should NOAA decide to amend the regulations governing discharges for USGS activities in CBNMS and GFNMS, any additional environmental analysis required under NEPA would be prepared and released for public comment.

B. Executive Order 12866: Regulatory Impact

This action has been determined to be not significant for purposes of the meaning of Executive Order 12866.

C. Administrative Procedure Act

The Assistant Administrator of National Ocean Service (NOS) finds good cause pursuant to 5 U.S.C. 553(b)(B) to waive the notice and comment requirements of the Administrative Procedure Act (APA) because this action is administrative in nature. This action postpones the effectiveness of the discharge requirements in the regulations for CBNMS and GFNMS in the areas added to the sanctuaries' boundaries in 2015 (subject to notice and comment review) with regard to U.S. Coast Guard activities for 6 months to provide adequate time for public scoping, completion of an environmental assessment, and subsequent rulemaking, as appropriate. Should NOAA decide to amend the regulations governing discharges in CBNMS and GFNMS, it would publish a proposed rule followed by an appropriate public comment period as required by the APA. The substance of the underlying regulations remains unchanged. Therefore, providing notice and opportunity for public comment under the Administrative Procedure Act would serve no useful purpose. The delay in effectiveness provided by this action will also enable NOAA to fully implement its statutory responsibilities under the NMSA to protect resources of a national marine sanctuary. For the reasons above, the Assistant Administrator also finds good cause under 5 U.S.C. 553(d) to waive the 30-day delay in effectiveness and make this action effective immediately upon publication.

Authority: 16 U.S.C. 1431 *et seq.*

Dated: December 1, 2016.

W. Russell Callender,

Assistant Administrator for Ocean Services and Coastal Management.

[FR Doc. 2016–29234 Filed 12–5–16; 8:45 am]

BILLING CODE 3510–NK–P

DEPARTMENT OF HOMELAND SECURITY

U.S. Customs and Border Protection

DEPARTMENT OF THE TREASURY

19 CFR Part 12

[CBP Dec. 16–24]

RIN 1515–AE20

Extension of Import Restrictions Imposed on Certain Archaeological and Ethnological Materials From the Plurinational State of Bolivia

AGENCY: U.S. Customs and Border Protection; Department of Homeland Security; Department of the Treasury.

ACTION: Final rule.

SUMMARY: This final rule amends the U.S. Customs and Border Protection (CBP) regulations to reflect an extension of import restrictions on certain archaeological and ethnological materials from the Plurinational State of Bolivia (''Bolivia''). The restrictions, which were originally imposed by Treasury Decision (T.D.) 01–86 and last extended by CBP Dec. 11–24, are due to expire on December 4, 2016. The Assistant Secretary for Educational and Cultural Affairs, United States Department of State, has determined that conditions continue to warrant the imposition of import restrictions. Accordingly, these import restrictions will remain in effect for an additional five years, and the CBP regulations are being amended to reflect this extension through December 4, 2021. These restrictions are being extended pursuant to determinations of the United States Department of State made under the terms of the Convention on Cultural Property Implementation Act in accordance with the United Nations Educational, Scientific and Cultural Organization (UNESCO) Convention on the Means of Prohibiting and Preventing the Illicit Import, Export and Transfer of Ownership of Cultural Property. T.D. 01–86 contains the Designated List of archaeological and ethnological

materials from Bolivia to which the restrictions apply.

DATES: Effective December 2, 2016.

FOR FURTHER INFORMATION CONTACT: For legal aspects, Lisa L. Burley, Chief, Cargo Security, Carriers and Restricted Merchandise Branch, Regulations and Rulings, Office of Trade, (202) 325–0215. For operational aspects, William R. Scopa, Branch Chief, Partner Government Agency Branch, Trade Policy and Programs, Office of Trade, (202) 863–6554, *William.R.Scopa@cbp.dhs.gov.*

SUPPLEMENTARY INFORMATION:

Background

Pursuant to the provisions of the 1970 United Nations Educational, Scientific and Cultural Organization (UNESCO) Convention, codified into U.S. law as the Convention on Cultural Property Implementation Act (Pub. L. 97–446, 19 U.S.C. 2601 *et seq.*), the United States entered into a bilateral agreement with Bolivia [1] on December 4, 2001, concerning the imposition of import restrictions on certain archaeological and ethnological materials from Bolivia. On December 7, 2001, the U.S. Customs Service (U.S. Customs and Border Protection's predecessor agency) published Treasury Decision (T.D.) 01–86 in the **Federal Register** (66 FR 63490), which amended 19 CFR 12.104g(a) to reflect the imposition of these restrictions and included a list designating the types of articles covered by the restrictions.

Import restrictions listed in 19 CFR 12.104g(a) are effective for no more than five years beginning on the date on which the agreement enters into force with respect to the United States. This period can be extended for additional periods not to exceed five years if it is determined that the factors which justified the initial agreement still pertain and no cause for suspension of the agreement exists (19 CFR 12.104g(a)).

On October 11, 2016, after reviewing the findings and recommendations of the Cultural Property Advisory Committee, the Assistant Secretary for Educational and Cultural Affairs, United States Department of State, concluding that the cultural heritage of Bolivia continues to be in jeopardy from pillage of certain archaeological and ethnological materials, made the necessary determination to extend the import restrictions for an additional five years. Diplomatic notes have been exchanged reflecting the extension of those restrictions for an additional five-year period. Accordingly, CBP is amending 19 CFR 12.104g(a) to reflect the extension of the import restrictions. The Designated List of Archaeological and Ethnological Material from Bolivia covered by these import restrictions is set forth in T.D. 01–86. The Designated List may also be found at the following Web site address: *https://eca.state.gov/cultural-heritage-center/cultural-property-protection/bilateral-agreements/bolivia.*

The restrictions on the importation of these archaeological and ethnological materials from Bolivia are to continue in effect through December 4, 2021. Importation of such material continues to be restricted unless the conditions set forth in 19 U.S.C. 2606 and 19 CFR 12.104c are met.

Inapplicability of Notice and Delayed Effective Date

This amendment involves a foreign affairs function of the United States and is, therefore, being made without notice or public procedure under 5 U.S.C. 553(a)(1). In addition, CBP has determined that such notice or public procedure would be impracticable and contrary to the public interest because the action being taken is essential to avoid interruption of the application of the existing import restrictions (5 U.S.C. 553(b)(B)). For the same reason, a delayed effective date is not required under 5 U.S.C. 553(d)(3).

Regulatory Flexibility Act

Because no notice of proposed rulemaking is required, the provisions of the Regulatory Flexibility Act (5 U.S.C. 601 *et seq.*) do not apply.

Executive Order 12866

Because this rule involves a foreign affairs function of the United States, it is not subject to Executive Order 12866.

Signing Authority

This regulation is being issued in accordance with 19 CFR 0.1(a)(1).

List of Subjects in 19 CFR Part 12

Cultural property, Customs duties and inspection, Imports, Prohibited merchandise.

Amendment to CBP Regulations

For the reasons set forth above, part 12 of title 19 of the Code of Federal Regulations (19 CFR part 12), is amended as set forth below:

PART 12—SPECIAL CLASSES OF MERCHANDISE

■ 1. The general authority citation for part 12 and the specific authority citation for § 12.104g continue to read as follows:

Authority: 5 U.S.C. 301; 19 U.S.C. 66, 1202 (General Note 3(i), Harmonized Tariff Schedule of the United States (HTSUS)), 1624;

* * * * *

Sections 12.104 through 12.104i also issued under 19 U.S.C. 2612;

* * * * *

§ 12.104g [Amended]

■ 2. In § 12.104g, paragraph (a), the table is amended in the entry for Bolivia by removing the words ''CBP Dec. 11–24'' in the column headed ''Decision No.'' and adding in their place the words ''CBP Dec. 16–24.''

R. Gil Kerlikowske,

Commissioner, U.S. Customs and Border Protection.

Approved: December 1, 2016.

Timothy E. Skud,

Deputy Assistant Secretary of the Treasury.

[FR Doc. 2016–29279 Filed 12–2–16; 11:15 am]

BILLING CODE 9111–14–P

DEPARTMENT OF HOMELAND SECURITY

U.S. Customs and Border Protection

DEPARTMENT OF THE TREASURY

19 CFR Part 12

[CBP Dec. 16–23]

RIN 1515–AE19

Import Restrictions Imposed on Certain Archaeological Material From Egypt

AGENCY: U.S. Customs and Border Protection, Department of Homeland Security; Department of the Treasury.

ACTION: Final rule.

SUMMARY: This final rule amends the U.S. Customs and Border Protection (CBP) regulations to reflect the imposition of import restrictions on certain archaeological material from the Arab Republic of Egypt (Egypt). These restrictions are being imposed pursuant to an agreement between the United States and Egypt that has been entered into under the authority of the Convention on Cultural Property Implementation Act in accordance with the 1970 United Nations Educational, Scientific and Cultural Organization

[1] In 2009, the new constitution of Bolivia changed the country's official name from the ''Republic of Bolivia'' to the ''Plurinational State of Bolivia.''

(UNESCO) Convention on the Means of Prohibiting and Preventing the Illicit Import, Export and Transfer of Ownership of Cultural Property. The final rule amends CBP regulations by adding Egypt to the list of countries for which a bilateral agreement has been entered into for imposing cultural property import restrictions. The final rule also contains the designated list that describes the types of archaeological material to which the restrictions apply.

DATES: Effective December 5, 2016.

FOR FURTHER INFORMATION CONTACT: For legal aspects, Lisa L. Burley, Chief, Cargo Security, Carriers and Restricted Merchandise Branch, Regulations and Rulings, Office of Trade, (202) 325–0030. For operational aspects, William Scopa, Branch Chief, Partner Government Agency Branch, Trade Policy and Programs, Office of Trade, (202) 863–6554, *William.R.Scopa@cbp.dhs.gov.*

SUPPLEMENTARY INFORMATION:

Background

The value of cultural property, whether archaeological or ethnological in nature, is immeasurable. Such items often constitute the very essence of a society and convey important information concerning a people's origin, history, and traditional setting. The importance and popularity of such items regrettably makes them targets of theft, encourages clandestine looting of archaeological sites, and results in their illegal export and import.

The United States shares in the international concern for the need to protect endangered cultural property. The appearance in the United States of stolen or illegally exported artifacts from other countries where there has been pillage has, on occasion, strained our foreign and cultural relations. This situation, combined with the concerns of museum, archaeological, and scholarly communities, was recognized by the President and Congress. It became apparent that it was in the national interest for the United States to join with other countries to control illegal trafficking of such articles in international commerce.

The United States joined international efforts and actively participated in deliberations resulting in the 1970 United Nations Educational, Scientific and Cultural Organization (UNESCO) Convention on the Means of Prohibiting and Preventing the Illicit Import, Export and Transfer of Ownership of Cultural Property (823 U.N.T.S. 231 (1972)). U.S. acceptance of the 1970 UNESCO Convention was codified into U.S. law as the ''Convention on Cultural Property Implementation Act'' (Pub. L. 97–446, 19 U.S.C. 2601 *et seq.*) (the Act). This was done to promote U.S. leadership in achieving greater international cooperation towards preserving cultural treasures that are of importance to the nations from where they originate and contribute to greater international understanding of our common heritage.

Since the Act entered into force, import restrictions have been imposed on the archaeological and ethnological materials of a number of State Parties to the 1970 UNESCO Convention. These restrictions have been imposed as a result of requests for protection received from those nations. More information on import restrictions can be found on the Cultural Property Protection Web site (*http://eca.state.gov/cultural-heritage-center/cultural-property-protection*).

This rule announces that import restrictions are now being imposed on certain archaeological material from Egypt.

Determinations

Under 19 U.S.C. 2602(a)(1), the United States must make certain determinations before entering into an agreement to impose import restrictions under 19 U.S.C. 2602(a)(2). On November 14, 2014, the Assistant Secretary for Educational and Cultural Affairs, Department of State, made the determinations required under the statute with respect to certain archaeological material originating in Egypt that are described in the designated list set forth below in this document. These determinations include the following: (1) That the cultural patrimony of Egypt is in jeopardy from the pillage of archaeological material representing Egypt's cultural heritage dating from the Predynastic period (5,200 B.C.) through 1517 A.D. (19 U.S.C. 2602(a)(1)(A)); (2) that the Egyptian government has taken measures consistent with the Convention to protect its cultural patrimony (19 U.S.C. 2602(a)(1)(B)); (3) that import restrictions imposed by the United States would be of substantial benefit in deterring a serious situation of pillage and remedies less drastic are not available (19 U.S.C. 2602(a)(1)(C)); and (4) that the application of import restrictions as set forth in this final rule is consistent with the general interests of the international community in the interchange of cultural property among nations for scientific, cultural, and educational purposes (19 U.S.C. 2602(a)(1)(D)). The Assistant Secretary also found that the material described in the determinations meets the statutory definition of ''archaeological material of the state party'' (19 U.S.C. 2601(2)).

The Agreement

The United States and Egypt entered into a bilateral agreement on November 30, 2016, pursuant to the provisions of 19 U.S.C. 2602(a)(2). The agreement enables the promulgation of import restrictions on categories of archaeological material representing Egypt's cultural heritage dating from the Predynastic period (5,200 B.C.) through 1517 A.D. A list of the categories of archaeological material subject to the import restrictions is set forth later in this document.

Restrictions and Amendment to the Regulations

In accordance with the Agreement, importation of material designated below is subject to the restrictions of 19 U.S.C. 2606 and § 12.104g(a) of the CBP regulations (19 CFR 12.104g(a)) and will be restricted from entry into the United States unless the conditions set forth in 19 U.S.C. 2606 and § 12.104c of the CBP regulations (19 CFR 12.104c) are met. CBP is amending § 12.104g(a) of the CBP Regulations (19 CFR 12.104g(a)) to indicate that these import restrictions have been imposed.

Designated List of Archaeological Material of Egypt

The bilateral agreement between the United States and Egypt includes, but is not limited to, the categories of objects described in the designated list set forth below. These categories of objects are subject to the import restrictions set forth above, in accordance with the above explained applicable law and the regulation amended in this document (19 CFR 12.104(g)(a)). The import restrictions include complete examples of objects and fragments thereof.

The archaeological material represent the following periods and cultures dating from 5,200 B.C. through 1517 A.D.: Predynastic, Pharaonic, Greco-Roman, Coptic, and Early Islamic through the Mamluk Dynasty. Many of the ancient place-names associated with the region of Egypt can be found in J. Baines and J. Malek, *Cultural Atlas of Ancient Egypt* (New York, 2000).

I. Stone

A. Sculpture

1. Architectural elements, from temples, tombs, palaces, commemorative monuments, and domestic architecture, including columns, capitals, bases, lintels, jambs, friezes, pilasters, engaged columns, mihrabs (prayer niches), fountains, and blocks from walls, floors, and ceilings.

Often decorated in relief with ornamental Pharaonic, Greco-Roman, and Coptic motifs and inscriptions. The most common architectural stones are limestone, sandstone and granite.

2. Statues, large- and small-scale, including human, animal, and hybrid figures with a human body and animal head. Human figures may be standing, usually with the left foot forward, seated on a block or on the ground, kneeling, or prone. Figures in stone may be supported by a slab of stone at the back. Greco-Roman examples use traditional Egyptian poses with Hellenistic modeling. The most popular stones are limestone, granite, basalt, sandstone, and diorite, and many other types of stone are used as well.

3. Relief sculpture, large- and small-scale, including Predynastic greywacke cosmetic palettes, limestone wall reliefs depicting scenes of daily life and rituals, and steles and plaques in a variety of stones for funerary and commemorative purposes.

4. Greco-Roman and Coptic tombstones.

B. Vessels and Containers

Includes conventional shapes such as bowls, cups, jars, and lamps, and vessels having the form of human, animal, hybrid, plant, hieroglyphic sign, and combinations or parts thereof.

C. Funerary Objects and Equipment

1. Sarcophagi and coffins, with separate lid, either in the form of a large rectangular box, or human-shaped and carved with modeled human features. Both types are often decorated inside and outside with incised images and inscriptions.

2. Canopic shrines, in the form of a box with space inside for four canopic jars.

3. Canopic jars with lids in the form of human or animal heads. A full set includes four jars. Sometimes these jars are dummies, carved from a single piece of stone with no interior space.

D. Objects of Daily Use

Including chests and boxes, headrests, writing and painting equipment, games and game pieces.

E. Tools and Weapons

Chipped stone includes large and small blades, borers, scrapers, sickles, awls, harpoons, cores, loom weights, and arrow heads. Ground stone types include mortars, pestles, millstones, whetstones, choppers, axes, hammers, molds, and mace heads.

F. Jewelry, Amulets, and Seals

1. Jewelry of colored and semi-precious stones for personal adornment, including necklaces, chokers, pectorals, pendants, crowns, earrings, bracelets, anklets, belts, girdles, aprons, and rings.

2. Amulets of colored and semi-precious stones in the form of humans, animals, hybrids, plants, hieroglyphic signs, and combinations or parts thereof.

3. Stamp and cylinder seals. The most common type is the scarab, in the form of a beetle with an inscription on the flat base.

G. Ostraca

Chips of stone used as surface for writing or drawing.

II. Metal

A. Sculpture

1. Statues, large- and small-scale, including human, animal, and hybrid figures similar to those in stone. Metal statues usually lack the support at the back. The most common material is bronze and copper alloys, and gold and silver are used as well.

2. Relief sculpture, including plaques, appliques, and mummy masks.

B. Vessels and Containers

Includes conventional shapes such as bowls, cups, jars, plates, cauldrons, and lamps, and vessels in the form of humans, animals, hybrids, plants, hieroglyphic signs, and combinations or parts thereof.

C. Objects of Daily Use

Musical instruments, including trumpets, clappers, and sistra.

D. Tools

Including axes, adzes, saws, drills, chisels, knives, hooks, needles, tongs, tweezers, and weights. Usually in bronze and copper alloys, later joined by iron.

E. Weapons and Armor

1. Weapons include mace heads, knives, swords, curved swords, axes, arrows, and spears. Usually in bronze and copper alloys, later joined by iron.

2. Early armor consisted of small metal scales, originally sewn to a backing of cloth or leather, later augmented by helmets, body armor, shields, and horse armor.

F. Jewelry, Amulets, and Seals

1. Jewelry of gold, silver, copper, and iron for personal adornment, including necklaces, pectorals, pendants, crowns, earrings, bracelets, anklets, belts, and rings.

2. Amulets in the form of humans, animals, hybrids, plants, hieroglyphic signs, and combinations or parts thereof.

G. Coptic Liturgical Objects

In metal, including censers, crosses, Bible caskets, and lamps.

H. Coins

In copper or bronze, silver, and gold.

1. General—There are a number of references that list Egyptian coin types. Below are some examples. Most Hellenistic and Ptolemaic coin types are listed in R.S. Poole, *A Catalogue of Greek Coins in the British Museum: Alexandria and the Nomes* (London, 1893); J.N. Svoronos, Τα Νομισματα του Κρατουσ των Πτολεμαιων *(Münzen der Ptolemäer)* (Athens 1904); and R.A. Hazzard, *Ptolemaic Coins: An Introduction for Collectors* (Toronto, 1985). Examples of catalogues listing the Roman coinage in Egypt are J.G. Milne, *Catalogue of Alexandrian Coins* (Oxford, 1933); J.W. Curtis, *The Tetradrachms of Roman Egypt* (Chicago, 1969); A. Burnett, M. Amandry, and P.P Ripollès, *Roman Provincial Coinage I: From the Death of Caesar to the Death of Vitellius (44 BC–AD 69)* (London, 1998—revised edition); and A. Burnett, M. Amandry, and I. Carradice, *Roman Provincial Coinage II: From Vespasian to Domitian (AD 69–96)* (London, 1999). There are also so-called *nwb-nfr* coins, which may date to Dynasty 30. See T. Faucher, W. Fischer-Bossert, and S. Dhennin, ''Les Monnaies en or aux types hiéroglyphiques *nwb nfr,*'' *Bulletin de l'institut français d'archéologie orientale* 112 (2012), pp. 147–169.

2. Dynasty 30—*Nwb nfr* coins have the hieroglyphs *nwb nfr* on one side and a horse on the other.

3. Hellenistic and Ptolemaic coins—Struck in gold, silver, and bronze at Alexandria and any other mints that operated within the borders of the modern Egyptian state. Gold coins of and in honor of Alexander the Great, struck at Alexandria and Memphis, depict a helmeted bust of Athena on the obverse and a winged Victory on the reverse. Silver coins of Alexander the Great, struck at Alexandria and Memphis, depict a bust of Herakles wearing the lion skin on the obverse, or ''heads'' side, and a seated statue of Olympian Zeus on the reverse, or ''tails'' side. Gold coins of the Ptolemies from Egypt will have jugate portraits on both obverse and reverse, a portrait of the king on the obverse and a cornucopia on the reverse, or a jugate portrait of the king and queen on the obverse and cornucopiae on the reverse. Silver coins of the Ptolemies coins from Egypt tend to depict a portrait of Alexander wearing an elephant skin on the obverse and Athena on the reverse or a portrait

of the reigning king with an eagle on the reverse. Some silver coins have jugate portraits of the king and queen on the obverse. Bronze coins of the Ptolemies commonly depict a head of Zeus (bearded) on the obverse and an eagle on the reverse. These iconographical descriptions are non-exclusive and describe only some of the more common examples. There are other types and variants. Approximate date: ca. 332 B.C. through ca. 31 B.C.

4. Roman coins—Struck in silver or bronze at Alexandria and any other mints that operated within the borders of the modern Egyptian state in the territory of the modern state of Egypt until the monetary reforms of Diocletian. The iconography of the coinage in the Roman period varied widely, although a portrait of the reigning emperor is almost always present on the obverse of the coin. Approximate date: ca. 31 B.C. through ca. A.D. 294.

III. Ceramic and Clay

A. Sculpture

Terracotta statues and statuettes, including human, animal, and hybrid figures.

B. Islamic Architectural Decorations

Including carved and molded brick, and tile wall ornaments and panels.

C. Vessels and Containers

1. Predynastic pottery, typically having a burnished red body with or without a white-painted decoration, or a burnished red body and black top, or a burnished black body sometimes with incised decoration, or an unburnished light brown body with dark red painted decoration, including human and animal figures and boats, spirals, or an abstract design.

2. Dynastic period pottery features primarily utilitarian but also ornate forms, typically undecorated, sometimes burnished. New Kingdom examples may have elaborate painted, incised, and molded decoration, especially floral motifs depicted in blue paint.

3. Roman period pottery includes vessels with rilled decoration, pilgrim flasks and terra sigillata, a high quality table ware made of red to reddish brown clay, and covered with a glossy slip.

4. Coptic pilgrim flasks, and decorated ceramic jars and bowls.

5. Islamic glazed, molded, and painted ceramics.

D. Objects of Daily Use

Including game pieces, loom weights, toys, and lamps.

E. Writing

1. Ostraca, pottery shards used as surface for writing or drawing.

2. Cuneiform tablets, typically small pillow-shaped rectangles of unbaked clay incised with patterns of wedge-shaped cuneiform symbols.

IV. Wood

A. Sculpture

1. Statues, large- and small-scale, including human, animal, and hybrid figures. Shabti statuettes, small mummiform human figures, are especially popular. Wood statues usually lack the support at the back.

2. Relief sculpture, large- and small-scale, including relief plaques for funerary purposes.

B. Architectural Elements

1. Coptic carved and inlaid wood panels, doors, ceilings, and altars, often decorated with floral, geometric, and Christian motifs.

2. Islamic carved and inlaid wood rooms, balconies, stages, panels, ceilings, and doors.

C. Funerary Objects and Equipment

1. Sarcophagi and coffins, with separate lid, either in the form of a large rectangular box, or human-shaped and carved with modeled human features. Both types are often decorated inside and outside with painted, inlaid or incised images, and inscriptions.

2. Mummy masks, often painted, inlaid, and covered with gold foil.

3. Funerary models, including boats, buildings, food, and activities from everyday life.

4. Shrines to house sarcophagi or statuettes of deities.

5. Food containers in the shape of the product they contain, such as bread or a duck.

D. Objects of Daily Use

Including furniture such as chairs, stools, beds, chests and boxes, headrests, writing and painting equipment, musical instruments, game boxes and pieces, walking sticks, chariots and chariot fittings.

E. Tools and Weapons

Including adzes, axes, bow drills, carpenter's levels and squares, bows, arrows, spears.

V. Faience and Glass

A. Egyptian Faience

A glossy, silicate-based fired material, is usually blue or turquoise, but other colors are found as well. It was popular for statuettes, including human, animal, and hybrid figures, vessels and containers, canopic jars, game pieces, seals, amulets, jewelry, and inlays in all types of objects.

B. Glass

1. Pharaonic glass containers are typically small and often elaborately decorated with multi-colored bands.

2. The Roman period introduced a great variety of hand-blown shapes.

3. Islamic vessels and containers in glass, including glass and enamel mosque lamps.

VI. Ivory, Bone, and Shell

A. Sculpture

Statuettes of ivory, including human, animal, and hybrid figures, and parts thereof. Some of the earliest Egyptian sculpture is in ivory.

B. Objects of Daily Use

Ivory, bone, and shell were used either alone or as inlays in luxury objects including furniture, chests and boxes, writing and painting equipment, musical instruments, games, cosmetic containers, combs, jewelry, amulets, and seals.

VII. Plaster and Cartonnage

A. Plaster

Typically molded and then decorated with paint or gilding for mummy masks, jewelry, and other objects in imitation of expensive materials. Also used by itself for life masks and sculptor's models.

B. Cartonnage

Pieces of papyrus or linen covered with plaster and molded into a shape, similar to papier-mâché, and then painted or gilded. Used for coffins and mummy masks. Today, cartonnage objects are sometimes dismantled in hopes of extracting inscribed papyrus fragments.

C. Stucco

Islamic architectural decoration in stucco.

VIII. Textile, Basketry, and Rope

A. Textile

1. Linen cloth was used in Pharaonic and Greco-Roman times for mummy wrapping, shrouds, garments, and sails.

2. Coptic textiles in linen and wool, including garments and hangings.

3. Islamic textile fragments.

B. Basketry

Plant fibers were used to make baskets and containers in a variety of shapes and sizes, as well as sandals and mats.

C. Rope

Rope and string were used for a great variety of purposes, including binding

planks together in shipbuilding, rigging, lifting water for irrigation, fishing nets, measuring, and stringing beads for jewelry and garments.

IX. Leather and Parchment

A. Leather

Used for shields, sandals, clothing, including undergarments, and horse trappings. It was also used occasionally as an alternative to papyrus as a writing surface, a function later assumed by parchment.

B. Parchment

In the Coptic period, documents such as illuminated ritual manuscripts occur in single leaves or bound as a book or ''codex'' and are written or painted on specially prepared animal skins (cattle, sheep/goat, camel) known as parchment.

X. Papyrus

Scrolls, books, manuscripts, and documents, including religious, ceremonial, literary, and administrative texts. Scripts include hieroglyphic, hieratic, Aramaic, Hebrew, Greek, Latin, Coptic, and Arabic.

XI. Painting and Drawing

A. Tomb Paintings

Paintings on plaster or stone, either flat or carved in relief. Typical subjects include the tomb owner and family, gods, and scenes from daily life.

B. Domestic Wall Painting

These are painted on mud plaster or lime plaster. Types include simple applied color, bands and borders, landscapes, and scenes of people and/or animals in natural or built settings.

C. Rock Art

Chipped and incised drawings on natural rock surfaces, from prehistoric to Pharaonic periods.

D. Ostraca

Paintings and drawings on stone chips and pottery shards.

E. Mummy Portrait Panels and Funerary Masks

In wood, plaster, and cartonnage, often painted with the head and upper body of the deceased.

F. Coptic Painting

1. Wall and ceiling paintings—On various kinds of plaster and which generally portray religious images and scenes of Biblical events. Surrounding paintings may contain animal, floral, or geometric designs, including borders and bands.

2. Panel Paintings (Icons)—Smaller versions of the scenes on wall paintings, and may be partially covered with gold or silver, sometimes encrusted with semi-precious or precious stones and are usually painted on a wooden panel, often for inclusion in a wooden screen (iconastasis). May also be painted on ceramic.

XII. Mosaics

A. Floor Mosaics

Greco-Roman, including landscapes, scenes of humans or gods, and activities such as hunting and fishing. There may also be vegetative, floral, or decorative motifs. They are made from stone cut into small bits (tesserae) and laid into a plaster matrix.

B. Wall and Ceiling Mosaics

Generally portray religious images and scenes of Biblical events. Surrounding panels may contain animal, floral, or geometric designs. Similar technique to floor mosaics, but may include teserae of both stone and glass.

XIII. Writing

On papyrus, wood, ivory, stone, metal, textile, clay, and ceramic, in hieroglyphic, hieratic, Aramaic, Assyrian, Babylonian, Persian, Hebrew, Greek, Latin, Coptic, and Arabic scripts.

XIV. Human and Animal Remains

Human and animal mummies.

Inapplicability of Notice and Delayed Effective Date

This amendment involves a foreign affairs function of the United States and is, therefore, being made without notice or public procedure (5 U.S.C. 553(a)(1)). For the same reason, a delayed effective date is not required under 5 U.S.C. 553(d)(3).

Regulatory Flexibility Act

Because no notice of proposed rulemaking is required, the provisions of the Regulatory Flexibility Act (5 U.S.C. 601 *et seq.*) do not apply.

Executive Order 12866

Because this rule involves a foreign affairs function of the United States, it is not subject to Executive Order 12866.

Signing Authority

This regulation is being issued in accordance with 19 CFR 0.1(a)(1).

List of Subjects in 19 CFR Part 12

Cultural property, Customs duties and inspection, Imports, Prohibited merchandise, Reporting and recordkeeping requirements.

Amendment to CBP Regulations

For the reasons set forth above, part 12 of Title 19 of the Code of Federal Regulations (19 CFR part 12), is amended as set forth below:

PART 12—SPECIAL CLASSES OF MERCHANDISE

■ 1. The general authority citation for part 12 and the specific authority citation for § 12.104g continue to read as follows:

Authority: 5 U.S.C. 301; 19 U.S.C. 66, 1202 (General Note 3(i), Harmonized Tariff Schedule of the United States (HTSUS)), 1624.

* * * * *

Sections 12.104 through 12.104i also issued under 19 U.S.C. 2612;

* * * * *

■ 2. In § 12.104g, paragraph (a), the table is amended by adding the Arab Republic of Egypt to the list in appropriate alphabetical order as follows:

§ 12.104g Specific items or categories designated by agreements or emergency actions.

(a) * * *

State party	Cultural property	Decision No.
*	* * * * * *	
Egypt	Archaeological material representing Egypt's cultural heritage from Predynastic period (5,200 B.C.) through 1517 A.D.	CBP Dec. 16–23.
*	* * * * * *	

* * * * *

R. Gil Kerlikowske,

Commissioner, U.S. Customs and Border Protection.

Approved: December 1, 2016.

Timothy E. Skud,

Deputy Assistant Secretary of the Treasury.

[FR Doc. 2016–29191 Filed 12–5–16; 8:45 am]

BILLING CODE 9111–14–P

DEPARTMENT OF HEALTH AND HUMAN SERVICES

Food and Drug Administration

21 CFR Part 882

[Docket No. FDA–2015–N–2737]

Medical Devices; Neurological Devices; Classification of the Computerized Cognitive Assessment Aid for Concussion

AGENCY: Food and Drug Administration, HHS.

ACTION: Final order.

SUMMARY: The Food and Drug Administration (FDA) is classifying the Computerized Cognitive Assessment Aid for Concussion into class II (special controls). The special controls that will apply to the device are identified in this order and will be part of the codified language for the computerized cognitive assessment aid for concussion's classification. The Agency is classifying the device into class II (special controls) in order to provide a reasonable assurance of safety and effectiveness of the device.

DATES: This order is effective December 6, 2016. The classification was applicable on August 22, 2016.

FOR FURTHER INFORMATION CONTACT: Stacie Gutowski, Center for Devices and Radiological Health, Food and Drug Administration, 10903 New Hampshire Ave., Bldg. 66, Rm. 2656, Silver Spring, MD 20993–0002, 240–402–6032, *Stacie.Gutowski@fda.hhs.gov.*

SUPPLEMENTARY INFORMATION:

I. Background

In accordance with section 513(f)(1) of the Federal Food, Drug, and Cosmetic Act (the FD&C Act) (21 U.S.C. 360c(f)(1)), devices that were not in commercial distribution before May 28, 1976 (the date of enactment of the Medical Device Amendments of 1976), generally referred to as post-amendments devices, are classified automatically by statute into class III without any FDA rulemaking process. These devices remain in class III and require premarket approval, unless and until the device is classified or reclassified into class I or II, or FDA issues an order finding the device to be substantially equivalent, in accordance with section 513(i) of the FD&C Act, to a predicate device that does not require premarket approval. The Agency determines whether new devices are substantially equivalent to predicate devices by means of premarket notification procedures in section 510(k) of the FD&C Act (21 U.S.C. 360(k)) and part 807 (21 CFR part 807) of the regulations.

Section 513(f)(2) of the FD&C Act, as amended by section 607 of the Food and Drug Administration Safety and Innovation Act (Pub. L. 112–144), provides two procedures by which a person may request FDA to classify a device under the criteria set forth in section 513(a)(1). Under the first procedure, the person submits a premarket notification under section 510(k) of the FD&C Act for a device that has not previously been classified and, within 30 days of receiving an order classifying the device into class III under section 513(f)(1) of the FD&C Act, the person requests a classification under section 513(f)(2). Under the second procedure, rather than first submitting a premarket notification under section 510(k) of the FD&C Act and then a request for classification under the first procedure, the person determines that there is no legally marketed device upon which to base a determination of substantial equivalence and requests a classification under section 513(f)(2) of the FD&C Act. If the person submits a request to classify the device under this second procedure, FDA may decline to undertake the classification request if FDA identifies a legally marketed device that could provide a reasonable basis for review of substantial equivalence with the device or if FDA determines that the device submitted is not of ''low-moderate risk'' or that general controls would be inadequate to control the risks and special controls to mitigate the risks cannot be developed.

In response to a request to classify a device under either procedure provided by section 513(f)(2) of the FD&C Act, FDA shall classify the device by written order within 120 days. This classification will be the initial classification of the device.

On August 11, 2015, ImPACT Applications, Inc., submitted a request for classification of the ImPACT and ImPACT Pediatric under section 513(f)(2) of the FD&C Act.

In accordance with section 513(f)(2) of the FD&C Act, FDA reviewed the request in order to classify the device under the criteria for classification set forth in section 513(a)(1). FDA classifies devices into class II if general controls by themselves are insufficient to provide reasonable assurance of safety and effectiveness, but there is sufficient information to establish special controls to provide reasonable assurance of the safety and effectiveness of the device for its intended use. After review of the information submitted in the request, FDA determined that the device can be classified into class II with the establishment of special controls. FDA believes these special controls, in addition to general controls, will provide reasonable assurance of the safety and effectiveness of the device.

Therefore, on August 22, 2016, FDA issued an order to the requestor classifying the device into class II. FDA is codifying the classification of the device by adding 21 CFR 882.1471.

Following the effective date of this final classification order, any firm submitting a premarket notification (510(k)) for a computerized cognitive assessment aid for concussion will need to comply with the special controls named in this final order. The device is assigned the generic name computerized cognitive assessment aid for concussion, and it is identified as a prescription device that uses an individual's score(s) on a battery of cognitive tasks to provide an indication of the current level of cognitive function in response to concussion. The computerized cognitive assessment aid for concussion is used only as an assessment aid in the management of concussion to determine cognitive function for patients after a potential concussive event where other diagnostic tools are available and does not identify the presence or absence of concussion. It is not intended as a stand-alone diagnostic device.

FDA has identified the following risks to health associated specifically with this type of device, as well as the mitigation measures required to mitigate these risks in table 1.

TABLE 1—COMPUTERIZED COGNITIVE ASSESSMENT AID FOR CONCUSSION RISKS AND MITIGATION MEASURES

Identified risk	Mitigation measure
User discomfort (e.g., visual or mental fatigue)	• Labeling.
Incorrect result, inclusive of:	• Clinical performance testing.
• False positive—cognitive impairment from concussion when in fact none is present	• Software verification, validation, and hazard analysis.
• False negative—cognitive impairment from concussion is not noted when in fact cognitive impairment is present.	• Labeling.

FDA believes that the special controls, in combination with the general controls, address these risks to health and provide reasonable assurance of the safety and effectiveness.

Computerized cognitive assessment aid for concussion devices are not safe for use except under the supervision of a practitioner licensed by law to direct the use of the device. As such, the device is a prescription device and must satisfy prescription labeling requirements (see 21 CFR 801.109 (*Prescription devices*)).

Section 510(m) of the FD&C Act provides that FDA may exempt a class II device from the premarket notification requirements under section 510(k), if FDA determines that premarket notification is not necessary to provide reasonable assurance of the safety and effectiveness of the device. For this type of device, FDA has determined that premarket notification is necessary to provide reasonable assurance of the safety and effectiveness of the device. Therefore, this device type is not exempt from premarket notification requirements. Persons who intend to market this type of device must submit to FDA a premarket notification, prior to marketing the device, which contains information about the computerized cognitive assessment aid for concussion they intend to market.

II. Analysis of Environmental Impact

The Agency has determined under 21 CFR 25.34(b) that this action is of a type that does not individually or cumulatively have a significant effect on the human environment. Therefore, neither an environmental assessment nor an environmental impact statement is required.

III. Paperwork Reduction Act of 1995

This final order establishes special controls that refer to previously approved collections of information found in other FDA regulations. These collections of information are subject to review by the Office of Management and Budget (OMB) under the Paperwork Reduction Act of 1995 (44 U.S.C. 3501–3520). The collections of information in part 807, subpart E, regarding premarket notification submissions, have been approved under OMB control number 0910–0120, and the collections of information in 21 CFR part 801, regarding labeling, have been approved under OMB control number 0910–0485.

List of Subjects in 21 CFR Part 882

Medical devices.

Therefore, under the Federal Food, Drug, and Cosmetic Act and under authority delegated to the Commissioner of Food and Drugs, 21 CFR part 882 is amended as follows:

PART 882—NEUROLOGICAL DEVICES

■ 1. The authority citation for part 882 is revised to read as follows:

Authority: 21 U.S.C. 351, 360, 360c, 360e, 360j, 360*l*, 371.

■ 2. Add § 882.1471 to subpart B to read as follows:

§ 882.1471 Computerized cognitive assessment aid for concussion.

(a) *Identification.* The computerized cognitive assessment aid for concussion is a prescription device that uses an individual's score(s) on a battery of cognitive tasks to provide an indication of the current level of cognitive function in response to concussion. The computerized cognitive assessment aid for concussion is used only as an assessment aid in the management of concussion to determine cognitive function for patients after a potential concussive event where other diagnostic tools are available and does not identify the presence or absence of concussion. It is not intended as a stand-alone diagnostic device.

(b) *Classification.* Class II (special controls). The special controls for this device are:

(1) Software, including any proprietary algorithm(s) used by the device to arrive at its interpretation of the patient's cognitive function, must be described in detail in the software requirements specification (SRS) and software design specification (SDS). Software verification, validation, and hazard analysis must be performed.

(2) Clinical performance data must be provided that demonstrates how the device functions as an interpretation of the current level of cognitive function in an individual that has recently received an injury that causes concern about a possible concussion. The testing must:

(i) Evaluate device output and clinical interpretation.

(ii) Evaluate device test-retest reliability of the device output.

(iii) Evaluate construct validity of the device cognitive assessments.

(iv) Describe the construction of the normative database, which includes the following:

(A) How the clinical workup was completed to establish a ''normal'' population, including the establishment of inclusion and exclusion criteria.

(B) Statistical methods and model assumptions used.

(3) The labeling must include:

(i) A summary of any clinical testing conducted to demonstrate how the device functions as an interpretation of the current level of cognitive function in a patient that has recently received an injury that causes concern about a possible concussion. The summary of testing must include the following:

(A) Device output and clinical interpretation.

(B) Device test-retest reliability of the device output.

(C) Construct validity of the device cognitive assessments.

(D) A description of the normative database, which includes the following:

(*1*) How the clinical workup was completed to establish a ''normal'' population, including the establishment of inclusion and exclusion criteria.

(*2*) How normal values will be reported to the user.

(*3*) Representative screen shots and reports that will be generated to provide the user results and normative data.

(*4*) Statistical methods and model assumptions used.

(*5*) Whether or not the normative database was adjusted due to differences in age and gender.

(ii) A warning that the device should only be used by health care professionals who are trained in concussion management.

(iii) A warning that the device does not identify the presence or absence of concussion or other clinical diagnoses.

(iv) A warning that the device is not a stand-alone diagnostic.

(v) Any instructions technicians must convey to patients regarding the administration of the test and collection of cognitive test data.

Dated: November 30, 2016.

Leslie Kux,

Associate Commissioner for Policy.

[FR Doc. 2016–29134 Filed 12–5–16; 8:45 am]

BILLING CODE 4164–01–P

DEPARTMENT OF HOUSING AND URBAN DEVELOPMENT

24 CFR Parts 5, 91, 92, 93, 200, 247, 574, 576, 578, 880, 882, 883, 884, 886, 891, 905, 960, 966, 982, and 983

[Docket No. FR 5720–C–04]

Violence Against Women Reauthorization Act of 2013: Implementation in HUD Housing Programs; Correction

AGENCY: Office of General Counsel, HUD.

ACTION: Final rule; correction.

SUMMARY: On November 16, 2016, HUD published a final rule implementing in HUD's regulations the requirements of the 2013 reauthorization of the Violence Against Women Act (VAWA). After publication, HUD discovered an incorrect compliance date in the preamble and an incorrect paragraph designation in the regulatory text. The compliance date, with respect to completing an emergency transfer plan and providing emergency transfers, and associated recordkeeping and reporting requirements, was incorrectly listed as May 15, 2017, in the preamble. The regulatory text provided the correct date of June 14, 2017. This document makes the necessary correction to the preamble to reflect the compliance date in the regulatory text of June 14, 2017 and the paragraph designations in the regulatory text.

DATES: This correction is effective December 16, 2016.

FOR FURTHER INFORMATION CONTACT: With respect to this supplementary document, contact Ariel Pereira, Associate General Counsel for Legislation and Regulations, Department of Housing and Urban Development, 451 7th Street SW., Room 10238, Washington, DC 20410; telephone number 202–708–1793 (this is not a toll-free number). Persons with hearing or speech impairments may access this number through TTY by calling the toll-free Federal Relay Service at 800–877–8339.

SUPPLEMENTARY INFORMATION: In the final rule FR Doc. 5720–F–03, beginning on page 80724 in the **Federal Register** of November 16, 2016, the following corrections are made:

1. In the **DATES** section, on page 80724 in the second column, revise ''May 15, 2017'' to read ''June 14, 2017''.

2. In the II.B SUMMARY OF PUBLIC COMMENTS AND HUD RESPONSES section, on page 80790 in the second column, revise ''May 15, 2017'' to read ''June 14, 2017''.

§ 578.99 [Corrected]

■ 3. On page 80810, in the second column, in the 24 CFR 578.99 regulatory text, the second set of paragraphs (j)(2)(i) through (iii) is redesignated as (j)(2)(iii)(A) through (C).

Dated: December 1, 2016.

Ariel Pereira,

Associate General Counsel for Legislation and Regulations.

[FR Doc. 2016–29213 Filed 12–5–16; 8:45 am]

BILLING CODE 4210–67–P

DEPARTMENT OF HOMELAND SECURITY

Coast Guard

33 CFR Part 117

[Docket No. USCG–2016–1042]

Drawbridge Operation Regulation; Inner Harbor Navigation Canal, New Orleans, LA

AGENCY: Coast Guard, DHS.

ACTION: Notice of deviation from drawbridge regulations.

SUMMARY: The Coast Guard has issued a temporary deviation from the operating schedule that governs the L & N Railroad/Almonaster Road drawbridge across the Inner Harbor Navigation Canal, mile 2.9 at New Orleans, Orleans Parish, Louisiana. The deviation is necessary to conduct repair and replacement of the lift rail assembly on the south end of the bridge. These repairs are essential for the continued safe operation of the bridge. This deviation allows the bridge to remain closed-to-navigation for ten hours with a scheduled one-hour opening to facilitate passage of vessel traffic.

DATES: This deviation is effective from 7 a.m. through 5 p.m., on December 15, 2016.

ADDRESSES: The docket for this deviation, [USCG–2016–1042] is available at *http://www.regulations.gov.* Type the docket number in the ''SEARCH'' box and click ''SEARCH''. Click on Open Docket Folder on the line associated with this deviation.

FOR FURTHER INFORMATION CONTACT: If you have questions on this temporary deviation, call or email Giselle MacDonald, Bridge Administration Branch, Coast Guard, telephone (504) 671–2128, email *Giselle.T.MacDonald@uscg.mil.*

SUPPLEMENTARY INFORMATION: CXS Transportation, through the Port of New Orleans, requested a temporary deviation from the operating schedule of the L & N Railroad/Almonaster Road drawbridge across the Inner Harbor Navigation Canal, mile 2.9 at New Orleans, Orleans Parish, Louisiana.

The vertical clearance of the L & N Railroad/Almonaster Road bascule bridge is one foot above high water in the closed-to-navigation position and unlimited clearance in the open-to-navigation position. Navigation on the waterway consists of tugs with tows, small ships, fishing vessels, sailing vessels, and other recreational craft. In accordance with 33 CFR 117.5, the draw shall open on signal for the passage of vessels.

This deviation allows the drawbridge to remain in the closed-to-navigation position from 7 a.m. through 11 a.m. and from noon through 5 p.m. on Thursday, December 15, 2016, with the bridge scheduled to open at 11 a.m. through noon for the passage of all waiting vessels.

The bridge will not be able to open for the passage of vessels except during the one-hour scheduled opening. Alternate routes are available via the Chef Menteur Pass and the Rigolets.

In accordance with 33 CFR 117.35(e), the drawbridge must return to its regular operating schedule immediately at the end of the effective period of this temporary deviation. This deviation from the operating regulations is authorized under 33 CFR 117.35.

Dated: December 1, 2016.

David M. Frank,

Bridge Administrator, Eighth Coast Guard District.

[FR Doc. 2016–29177 Filed 12–5–16; 8:45 am]

BILLING CODE 9110–04–P

DEPARTMENT OF HOMELAND SECURITY

Coast Guard

33 CFR Part 165

[Docket Number USCG–2016–0935]

RIN 1625–AA11

Regulated Navigation Area; Portsmouth Naval Shipyard, Kittery, ME and Portsmouth, NH

AGENCY: Coast Guard, DHS.

ACTION: Temporary final rule.

SUMMARY: The Coast Guard is establishing a temporary regulated navigation area (RNA) on the Piscataqua River near the Portsmouth Naval Shipyard, Kittery, ME between Henderson Point Light on Seavey Island and the Memorial Bridge. This RNA establishes speed restrictions to eliminate vessel wake which could endanger the lives of divers and support crews working at the Portsmouth Naval Shipyard. The speed restrictions apply to all vessels transiting the regulated area unless authorized by the First Coast Guard District Commander or the Captain of the Port (COTP), Sector Northern New England.

DATES: This rule is effective without actual notice from December 6, 2016 through June 30, 2017. For the purposes of enforcement, actual notice will be used from November 14, 2016, through December 6, 2016.

ADDRESSES: To view documents mentioned in this preamble as being available in the docket, go to *http://www.regulations.gov,* type USCG–2016–0935 in the ''SEARCH'' box and click ''SEARCH.'' Click on Open Docket Folder on the line associated with this rule.

FOR FURTHER INFORMATION CONTACT: If you have questions on this rule, call or email Mr. Craig Lapiejko, Waterways Management, First Coast Guard District; telephone (617) 223–8351, email *Craig.D.Lapiejko@uscg.mil.* You may also call or email Chief Petty Officer Chris Bains, Waterways Management Division, U.S. Coast Guard Sector Northern New England; telephone (207) 347–5003, email *Chris.D.Bains@uscg.mil.*

SUPPLEMENTARY INFORMATION:

I. Table of Abbreviations

CFR Code of Federal Regulations
DHS Department of Homeland Security
FR Federal Register
NPRM Notice of proposed rulemaking
§ Section
U.S.C. United States Code
RNA Regulated Navigation Area
COTP Captain of the Port

II. Background Information and Regulatory History

The Coast Guard is issuing this temporary rule without prior notice and opportunity to comment pursuant to authority under section 4(a) of the Administrative Procedure Act (APA) (5 U.S.C. 553(b)). This provision authorizes an agency to issue a rule without prior notice and opportunity to comment when the agency for good cause finds that those procedures are ''impracticable, unnecessary, or contrary to the public interest.'' Under 5 U.S.C. 553(b)(B), the Coast Guard finds that good cause exists for not publishing a notice of proposed rulemaking (NPRM) with respect to this rule because doing so would be impracticable. The Coast Guard was notified of the need for this rule on September 26, 2016. This late notice did not give the Coast Guard enough time to publish a NPRM, take public comments, and issue a final rule before the rule is necessary. Delaying implementation of this rule would inhibit the Coast Guard's ability to provide for the safety of divers and workers completing ship construction at the Portsmouth Naval Shipyard. Without the rule, wake from passing vessels could cause the ship to move erratically and unexpectedly, severely injuring divers and support crews.

We are issuing this rule, and under 5 U.S.C. 553(d)(3), the Coast Guard finds that good cause exists for making it effective less than 30 days after publication in the **Federal Register**. For reasons stated in the preceding paragraph, delaying the implementation of this rule would be impracticable.

III. Legal Authority and Need for Rule

The Coast Guard is issuing this temporary rule under authority in 33 U.S.C. 1231.

As part of a ship construction project at the Portsmouth Naval Shipyard, divers will be in the water from November 14, 2016, through June 30, 2016. The Coast Guard First District Commander has determined that unexpected and uncontrolled movement of the vessel and associated equipment due to a wake puts the divers and their support crews at significant risk for serious injury or death. In order to ensure the safety of workers during the construction period, the Coast Guard is establishing an RNA to limit the speed, thus wake, of all vessels operating near the shipyard.

IV. Discussion of the Rule

This rule places speed restrictions on all vessels transiting the navigable waters of the Piscataqua River, Kittery, ME near the Portsmouth Naval Shipyard between Henderson Point Light on Seavey Island and the Memorial Bridge from 12:01 a.m. on November 14, 2016, through 11:59 p.m. on June 30, 2017. The vessels operating within the RNA are subject to a ''Slow-No Wake'' speed limit. More specifically, vessels may not produce a wake and may not attain speeds greater than five (5) knots unless a higher minimum speed is necessary to maintain steerageway.

The COTP Sector Northern New England will cause notice of enforcement or suspension of enforcement of this regulated navigation area to be made by all appropriate means in order to affect the widest distribution among the affected segments of the public. Such means of notification will include Broadcast Notice to Mariners and Local Notice to Mariners. In addition, COTP Sector Northern New England maintains a telephone line that is staffed at all times. The public can obtain information concerning enforcement of the RNA by contacting the Sector Northern New England Command Center at (207) 767–0303.

V. Regulatory Analyses

We developed this rule after considering numerous statutes and executive orders related to rulemaking. Below we summarize our analyses based on a number of these statutes and executive orders, and we discuss First Amendment rights of protestors.

A. Regulatory Planning and Review

Executive Orders 12866 and 13563 direct agencies to assess the costs and benefits of available regulatory alternatives and, if regulation is necessary, to select regulatory approaches that maximize net benefits. Executive Order 13563 emphasizes the importance of quantifying both costs and benefits, of reducing costs, of harmonizing rules, and of promoting flexibility. This rule has not been designated a ''significant regulatory action,'' under Executive Order 12866. Accordingly, it has not been reviewed by the Office of Management and Budget.

This regulatory action determination is based on the size, location, duration, and time-of-year of the RNA. The public impact of this rule will be minimal as the temporary speed restrictions only apply to a small designated area of the Piscataqua River, causing minimal delay to a vessel's transit.

B. Impact on Small Entities

The Regulatory Flexibility Act of 1980, 5 U.S.C. 601–612, as amended, requires Federal agencies to consider the potential impact of regulations on small entities during rulemaking. The term ''small entities'' comprises small businesses, not-for-profit organizations that are independently owned and operated and are not dominant in their fields, and governmental jurisdictions with populations of less than 50,000. The Coast Guard certifies under 5 U.S.C. 605(b) that this rule will not have a significant economic impact on a substantial number of small entities.

While some owners or operators of vessels intending to transit the RNA may be small entities, for the reasons stated in section V.A. above, this rule will not have a significant economic impact on any vessel owner or operator.

Under section 213(a) of the Small Business Regulatory Enforcement Fairness Act of 1996 (Pub. L. 104–121), we want to assist small entities in understanding this rule. If the rule would affect your small business, organization, or governmental jurisdiction and you have questions concerning its provisions or options for compliance, please contact the person listed in the **FOR FURTHER INFORMATION CONTACT** section.

Small businesses may send comments on the actions of Federal employees who enforce, or otherwise determine compliance with, Federal regulations to the Small Business and Agriculture Regulatory Enforcement Ombudsman and the Regional Small Business Regulatory Fairness Boards. The Ombudsman evaluates these actions annually and rates each agency's responsiveness to small business. If you wish to comment on actions by employees of the Coast Guard, call 1–888–REG–FAIR (1–888–734–3247). The Coast Guard will not retaliate against small entities that question or complain about this rule or any policy or action of the Coast Guard.

C. Collection of Information

This rule will not call for a new collection of information under the Paperwork Reduction Act of 1995 (44 U.S.C. 3501–3520).

D. Federalism and Indian Tribal Governments

A rule has implications for federalism under Executive Order 13132, Federalism, if it has a substantial direct effect on the States, on the relationship between the national government and the States, or on the distribution of power and responsibilities among the various levels of government. We have analyzed this rule under that order and have determined that it is consistent with the fundamental federalism principles and preemption requirements described in Executive Order 13132.

Also, this rule does not have tribal implications under Executive Order 13175, Consultation and Coordination with Indian Tribal Governments, because it does not have a substantial direct effect on one or more Indian tribes, on the relationship between the Federal Government and Indian tribes, or on the distribution of power and responsibilities between the Federal Government and Indian tribes. If you believe this rule has implications for federalism or Indian tribes, please contact the person listed in the **FOR FURTHER INFORMATION CONTACT** section above.

E. Unfunded Mandates Reform Act

The Unfunded Mandates Reform Act of 1995 (2 U.S.C. 1531–1538) requires Federal agencies to assess the effects of their discretionary regulatory actions. In particular, the Act addresses actions that may result in the expenditure by a State, local, or tribal government, in the aggregate, or by the private sector of $100,000,000 (adjusted for inflation) or more in any one year. Though this rule will not result in such an expenditure, we do discuss the effects of this rule elsewhere in this preamble.

F. Environment

We have analyzed this rule under Department of Homeland Security Management Directive 023–01 and Commandant Instruction M16475.lD, which guide the Coast Guard in complying with the National Environmental Policy Act of 1969 (42 U.S.C. 4321–4370f), and have determined that this action is one of a category of actions that do not individually or cumulatively have a significant effect on the human environment. This rule involves an RNA lasting 229 days that will limit vessel speed on the Piscataqua River in the vicinity of the Portsmouth Naval Shipyard while construction work is being completed. It is categorically excluded from further review under paragraph 34(g) of Figure 2–1 of the Commandant Instruction. An environmental analysis checklist supporting this determination and a Categorical Exclusion Determination will be available in the docket where indicated under **ADDRESSES**. We seek any comments or information that may lead to the discovery of a significant environmental impact from this rule.

G. Protest Activities

The Coast Guard respects the First Amendment rights of protesters. Protesters are asked to contact the person listed in the **FOR FURTHER INFORMATION CONTACT** section to coordinate protest activities so that your message can be received without jeopardizing the safety or security of people, places or vessels.

List of Subjects in 33 CFR Part 165

Harbors, Marine safety, Navigation (water), Reporting and recordkeeping requirements, Waterways.

For the reasons discussed in the preamble, the Coast Guard amends 33 CFR part 165 as follows:

PART 165—REGULATED NAVIGATION AREAS AND LIMITED ACCESS AREAS

■ 1. The authority citation for part 165 continues to read as follows:

Authority: 33 U.S.C. 1231; 50 U.S.C. 191; 33 CFR 1.05–1, 6.04–1, 6.04–6; Department of Homeland Security Delegation No. 0170.1.

■ 2. Add § 165.T01–0935 to read as follows:

§ 165.T01–0935 Regulated Navigation Area; Portsmouth Naval Shipyard, Kittery, ME and Portsmouth, NH.

(a) *Location.* The following area is a regulated navigation area (RNA): All navigable waters on the Piscataqua River, Kittery, ME and Portsmouth, NH near Portsmouth Naval Shipyard from a line drawn between Henderson Point Light ''10'' (LLNR 8375) at 43°04′29.3″ N., 070°44′10.2″ W. on Seavey Island and Pierce Island Range Front Light (LLNR 8355) at 43°04′25.4″ N., 070°44′25.2″ W. to the Memorial Bridge at 43°04′46.8″ N., 070°45′09.6″ W.

(b) *Regulations.* (1) The general regulations contained in 33 CFR 165.10, 165.11 and 165.13 apply.

(2) In accordance with the general regulations, vessel movement within the RNA is subject to a ''Slow-No Wake'' speed limit. No vessel may produce a wake and may not attain speeds greater than five (5) knots unless a higher minimum speed is necessary to maintain steerageway.

(3) All vessels operating within the RNA must comply with all directions given to them by the Captain of the Port (COTP) Sector Northern New England or his on-scene representative. The ''on-scene representative'' of the COTP is any Coast Guard commissioned, warrant, or petty officer who has been designated by the COTP to act on his behalf. The on-scene representative may be on a Coast Guard vessel, state marine patrol vessel, another other designated

craft, or may be on shore and will communicate with vessels via VHF–FM radio or loudhailer. Members of the Coast Guard Auxiliary or Naval Harbor Security Patrol may be present to inform vessel operators of this regulation.

(4) All other relevant regulations, including but not limited to the Inland Navigation Rules (33 CFR chapter I, subchapter E), remain in effect within the RNA and must be strictly followed at all times.

(c) *Enforcement Period.* This section will be enforced 24 hours a day from November 14, 2016, through June 30, 2017.

(d) *Notifications.* Violations of this section may be reported to the COTP at (207) 767–0303 or on VHF-Channel 16.

Dated: November 7, 2016.

S.D. Poulin,

Rear Admiral, U.S. Coast Guard, Commander, First Coast Guard District.

[FR Doc. 2016–29260 Filed 12–5–16; 8:45 am]

BILLING CODE 9110–04–P

ENVIRONMENTAL PROTECTION AGENCY

40 CFR Part 52

[EPA–R04–OAR–2015–0521; FRL–9955–90–Region 4]

Air Plan Approval; Kentucky; Revisions to Louisville Definitions and Ambient Air Quality Standards

AGENCY: Environmental Protection Agency.

ACTION: Final rule.

SUMMARY: The Environmental Protection Agency (EPA) is taking final action to approve portions of the State Implementation Plan (SIP) submission submitted by the Commonwealth of Kentucky, through the Kentucky Division for Air Quality (KDAQ), on behalf of the Louisville Metro Air Pollution Control District (District), on March 22, 2011, and May 3, 2012. The revisions to the regulatory portion of the SIP that EPA is taking final action to approve pertain to changes to the District's air quality standards for lead (Pb), particulate matter (both $PM_{2.5}$ and PM_{10}), ozone, nitrogen dioxide (NO_2), and sulfur dioxide (SO_2) to reflect the National Ambient Air Quality Standards (NAAQS), definitional changes, and regulatory consolidation. EPA has determined that these portions of the March 22, 2011, and May 3, 2012, SIP revisions are consistent with the Clean Air Act (CAA or Act).

DATES: This rule will be effective January 5, 2017.

ADDRESSES: EPA has established a docket for this action under Docket Identification No. EPA–R04–OAR–2015–0521. All documents in the docket are listed on the *www.regulations.gov* Web site. Although listed in the index, some information is not publicly available, *i.e.,* Confidential Business Information or other information whose disclosure is restricted by statute. Certain other material, such as copyrighted material, is not placed on the Internet and will be publicly available only in hard copy form. Publicly available docket materials are available either electronically through *www.regulations.gov* or in hard copy at the Air Regulatory Management Section, Air Planning and Implementation Branch, Air, Pesticides and Toxics Management Division, U.S. Environmental Protection Agency, Region 4, 61 Forsyth Street SW., Atlanta, Georgia 30303–8960. EPA requests that if at all possible, you contact the person listed in the **FOR FURTHER INFORMATION CONTACT** section to schedule your inspection. The Regional Office's official hours of business are Monday through Friday 8:30 a.m. to 4:30 p.m., excluding federal holidays.

FOR FURTHER INFORMATION CONTACT: Richard Wong, Air Regulatory Management Section, Air Planning and Implementation Branch, Air, Pesticides and Toxics Management Division, U.S. Environmental Protection Agency, Region 4, 61 Forsyth Street SW., Atlanta, Georgia 30303–8960. The telephone number is (404) 562–8726. Mr. Wong can be reached via electronic mail at *wong.richard@epa.gov.*

SUPPLEMENTARY INFORMATION:

I. Background

Sections 108 and 109 of the CAA govern the establishment, review, and revision, as appropriate, of the NAAQS to protect public health and welfare. The CAA requires periodic review of the air quality criteria—the science upon which the standards are based—and the standards themselves. EPA's regulatory provisions that govern the NAAQS are found at 40 CFR 50—*National Primary and Secondary Ambient Air Quality Standards.*

In a proposed rulemaking published on August 1, 2016, EPA proposed to approve portions of Kentucky's revisions to the Jefferson County air quality regulations [1] in the Kentucky SIP, submitted by the Commonwealth on March 22, 2011, and May 3, 2012. *See* 81 FR 50428. The March 22, 2011, submission revises Jefferson County Regulation 1.02—*Definitions* and consolidates Regulations 3.02—*Applicability of Ambient Air Quality Standards;* 3.03—*Definitions;* 3.04—*Ambient Air Quality Standards;* and 3.05—*Methods of Measurement* into Regulation 3.01—*Ambient Air Quality Standards* (currently entitled *Purpose of Standards and Expression of Non-Degradation Intention* in the SIP) by removing Regulations 3.02 through 3.05 and expanding and retitling Regulation 3.01. This submission also seeks to revise Regulation 1.06—*Source Self-Monitoring and Reporting* and Regulation 1.07—*Emissions During Startups, Shutdowns, Malfunctions and Emergencies.* EPA is not taking action on the proposed changes to Regulation 1.06 at this time. EPA approved the revision to Regulation 1.07 on June 10, 2014 (79 FR 33101). The May 3, 2012, submission builds on the revisions to Regulation 3.01 proposed in the March 22, 2011, submission by updating the Jefferson County air quality standards for Pb, $PM_{2.5}$, PM_{10}, O_3, NO_2, and SO_2 to reflect the NAAQS, reordering the sections within the regulation, and making several textual modifications. The May 3, 2012, submission also seeks to remove the Ford Motor Company NO_X Reasonably Available Control Technology (RACT) permit from the SIP and replace it with a Title V permit; EPA is not taking action on the proposed permit substitution at this time. The details of Kentucky's submission and the rationale for EPA's action are explained in the proposed rulemaking. *See* 81 FR 50428. Comments on the proposed rulemaking were due on or before August 31, 2016. EPA received no adverse comments on the proposed action.

II. Incorporation by Reference

In this rule, EPA is finalizing regulatory text that includes incorporation by reference. In accordance with requirements of 1 CFR 51.5, EPA is finalizing the incorporation by reference of Jefferson County Regulation 1.02—*Definitions* (except for the definitions of ''Acute noncancer effect,'' ''Cancer,'' ''Carcinogen,'' and ''Chronic noncancer effect''), effective June 21, 2005, and Regulation 3.01—*Ambient Air Quality Standards,*

[1] In 2003, the City of Louisville and Jefferson County governments merged and the ''Jefferson County Air Pollution Control District'' was renamed the ''Louisville Metro Air Pollution Control District.'' However, each of the regulations in the Jefferson County portion of the Kentucky SIP still has the subheading ''Air Pollution Control District of Jefferson County.'' Thus, to be consistent with the terminology used in the SIP, EPA refers throughout this notice to regulations contained in Jefferson County portion of the Kentucky SIP as the ''Jefferson County'' regulations.

effective April 20, 2011. Therefore, these materials have been approved by EPA for inclusion in the SIP, have been incorporated by reference by EPA into that plan, are fully federally-enforceable under sections See page 660 of the submittal PDF in G:\ARMS\RDS Files through 2015\State Submittals\Kentucky\Finals\KY 197—Louisville SSM & misc.) 110 and 113 of the CAA as of the effective date of the final rulemaking of EPA's approval, and will be incorporated by reference by the Director of the Federal Register in the next update to the SIP compilation.[2] EPA has made, and will continue to make, these materials generally available through *www.regulations.gov* and/or at the EPA Region 4 office (please contact the person identified in the **FOR FURTHER INFORMATION CONTACT** section of this preamble for more information).

III. Final Action

EPA is taking final action to approve portions of Kentucky's submissions submitted by the Commonwealth of Kentucky through KDAQ on behalf of the District on March 22, 2011, and May 3, 2012. The submissions revise Jefferson County Regulation 1.02—*Definitions* (except for the definitions of ''Acute noncancer effect,'' ''Cancer,'' ''Carcinogen,'' and ''Chronic noncancer effect''), consolidate Regulations 3.02—*Applicability of Ambient Air Quality Standards;* 3.03—*Definitions;* 3.04—*Ambient Air Quality Standards;* and 3.05—*Methods of Measurement* into Regulation 3.01—*Ambient Air Quality Standards* (currently entitled *Purpose of Standards and Expression of Non-Degradation Intention* in the SIP) by removing Regulations 3.02 through 3.05 and expanding and retitling Regulation 3.01, and revise Regulation 3.01 by reordering the sections within the regulation, making several textual modifications, and updating the Jefferson County air quality standards for Pb, $PM_{2.5}$, PM_{10}, O_3, NO_2, and SO_2 to reflect the NAAQS.

IV. Statutory and Executive Order Reviews

Under the CAA, the Administrator is required to approve a SIP submission that complies with the provisions of the Act and applicable federal regulations. *See* 42 U.S.C. 7410(k); 40 CFR 52.02(a). Thus, in reviewing SIP submissions, EPA's role is to approve state choices, provided that they meet the criteria of the CAA. Accordingly, these actions merely proposes to approve state law as meeting federal requirements and does not impose additional requirements beyond those imposed by state law. For that reason, these actions:

- Are not a significant regulatory action subject to review by the Office of Management and Budget under Executive Orders 12866 (58 FR 51735, October 4, 1993) and 13563 (76 FR 3821, January 21, 2011);
- do not impose an information collection burden under the provisions of the Paperwork Reduction Act (44 U.S.C. 3501 *et seq.*);
- are certified as not having a significant economic impact on a substantial number of small entities under the Regulatory Flexibility Act (5 U.S.C. 601 *et seq.*);
- do not contain any unfunded mandate or significantly or uniquely affect small governments, as described in the Unfunded Mandates Reform Act of 1995 (Pub. L. 104–4);
- do not have Federalism implications as specified in Executive Order 13132 (64 FR 43255, August 10, 1999);
- are not an economically significant regulatory action based on health or safety risks subject to Executive Order 13045 (62 FR 19885, April 23, 1997);
- are not a significant regulatory action subject to Executive Order 13211 (66 FR 28355, May 22, 2001);
- are not subject to requirements of Section 12(d) of the National Technology Transfer and Advancement Act of 1995 (15 U.S.C. 272 note) because application of those requirements would be inconsistent with the CAA; and
- do not provide EPA with the discretionary authority to address, as appropriate, disproportionate human health or environmental effects, using practicable and legally permissible methods, under Executive Order 12898 (59 FR 7629, February 16, 1994).

The SIP is not approved to apply on any Indian reservation land or in any other area where EPA or an Indian tribe has demonstrated that a tribe has jurisdiction. In those areas of Indian country, these rules do not have tribal implications as specified by Executive Order 13175 (65 FR 67249, November 9, 2000), nor will it impose substantial direct costs on tribal governments or preempt tribal law.

The Congressional Review Act, 5 U.S.C. 801 *et seq.,* as added by the Small Business Regulatory Enforcement Fairness Act of 1996, generally provides that before a rule may take effect, the agency promulgating the rule must submit a rule report, which includes a copy of the rule, to each House of the Congress and to the Comptroller General of the United States. EPA will submit a report containing this action and other required information to the U.S. Senate, the U.S. House of Representatives, and the Comptroller General of the United States prior to publication of the rule in the **Federal Register**. A major rule cannot take effect until 60 days after it is published in the **Federal Register**. This action is not a ''major rule'' as defined by 5 U.S.C. 804(2).

Under section 307(b)(1) of the CAA, petitions for judicial review of this action must be filed in the United States Court of Appeals for the appropriate circuit by February 6, 2017. Filing a petition for reconsideration by the Administrator of this final rule does not affect the finality of this action for the purposes of judicial review nor does it extend the time within which a petition for judicial review may be filed, and shall not postpone the effectiveness of such rule or action. This action may not be challenged later in proceedings to enforce its requirements. *See* section 307(b)(2).

List of Subjects in 40 CFR Part 52

Environmental protection, Air pollution control, Incorporation by reference, Intergovernmental relations, Lead, Nitrogen dioxide, Sulfur dioxide, Particulate matter, Reporting and recordkeeping requirements.

Dated: November 21, 2016.

Heather McTeer Toney,

Regional Administrator, Region 4.

40 CFR part 52 is amended as follows:

PART 52—APPROVAL AND PROMULGATION OF IMPLEMENTATION PLANS

■ 1. The authority citation for part 52 continues to read as follows:

Authority: 42 U.S.C. 7401 *et seq.*

Subpart S—Kentucky

■ 2. Section 52.920(c) is amended:

■ a. Under Table 2, Reg 1—General Provisions by revising the entry for ''1.02'',

■ b. Under Table 2, Reg 3—Ambient Air Quality Standards revising the entry for ''3.01'', and

■ c. Under Table 2, Reg 3—Ambient Air Quality Standards by removing the entries for ''3.02'', ''3.03'', ''3.04'' and ''3.05''.

The revisions read as follows:

§ 52.920 Identification of plan.

* * * * *

(c) * * *

[2] 62 FR 27968 (May 22, 1997).

TABLE 2—EPA-APPROVED JEFFERSON COUNTY REGULATIONS FOR KENTUCKY

Reg	Title/subject	EPA approval date	Federal Register notice	District effective date	Explanation
*	*	*	*	*	*
1.02	Definitions	12/6/16	[Insert citation of publication].	6/21/05	Definitions approved except for ''Acute noncancer effect,'' ''Cancer,'' ''Carcinogen,'' and ''Chronic noncancer effect''.
*	*	*	*	*	*
3.01	Ambient Air Quality Standards.	12/6/16	[Insert citation of publication].	4/20/11	
*	*	*	*	*	*

* * * * *

[FR Doc. 2016–29106 Filed 12–5–16; 8:45 am]

BILLING CODE 6560–50–P

ENVIRONMENTAL PROTECTION AGENCY

40 CFR Part 52

[EPA–R04–OAR–2014–0426; FRL–9955–96–Region 4]

Air Quality Plans; Kentucky; Infrastructure Requirements for the 2010 Sulfur Dioxide National Ambient Air Quality Standard

AGENCY: Environmental Protection Agency (EPA).

ACTION: Final rule.

SUMMARY: The Environmental Protection Agency (EPA) is taking final action to approve portions of the State Implementation Plan (SIP) submission, submitted by the Commonwealth of Kentucky, Energy and Environment Cabinet, Department for Environmental Protection, through the Kentucky Division for Air Quality (KDAQ), on April 26, 2013, for inclusion into the Kentucky SIP. This final action pertains to the infrastructure requirements of the Clean Air Act (CAA or Act) for the 2010 1-hour sulfur dioxide (SO_2) national ambient air quality standard (NAAQS). The CAA requires that each state adopt and submit a SIP for the implementation, maintenance and enforcement of each NAAQS promulgated by EPA, which is commonly referred to as an ''infrastructure SIP submission.'' KDAQ certified that the Kentucky SIP contains provisions that ensure the 2010 1-hour SO_2 NAAQS is implemented, enforced, and maintained in Kentucky. EPA has determined that Kentucky's infrastructure SIP submission, provided to EPA on April 26, 2013, satisfies certain required infrastructure elements for the 2010 1-hour SO_2 NAAQS.

DATES: This rule will be effective January 5, 2017.

ADDRESSES: EPA has established a docket for this action under Docket Identification No. EPA–R04–OAR–2014–0426. All documents in the docket are listed on the *www.regulations.gov* Web site. Although listed in the index, some information is not publicly available, i.e., Confidential Business Information or other information whose disclosure is restricted by statute. Certain other material, such as copyrighted material, is not placed on the Internet and will be publicly available only in hard copy form. Publicly available docket materials are available either electronically through *www.regulations.gov* or in hard copy at the Air Regulatory Management Section, Air Planning and Implementation Branch, Air, Pesticides and Toxics Management Division, U.S. Environmental Protection Agency, Region 4, 61 Forsyth Street SW., Atlanta, Georgia 30303–8960. EPA requests that if at all possible, you contact the person listed in the **FOR FURTHER INFORMATION CONTACT** section to schedule your inspection. The Regional Office's official hours of business are Monday through Friday, 8:30 a.m. to 4:30 p.m., excluding federal holidays.

FOR FURTHER INFORMATION CONTACT: Michele Notarianni, Air Regulatory Management Section, Air Planning and Implementation Branch, Air, Pesticides and Toxics Management Division, U.S. Environmental Protection Agency, Region 4, 61 Forsyth Street SW., Atlanta, Georgia 30303–8960. Ms. Notarianni can be reached via electronic mail at *notarianni.michele@epa.gov* or via telephone at (404) 562–9031.

SUPPLEMENTARY INFORMATION:

I. Background and Overview

On June 2, 2010 (75 FR 35520, June 22, 2010), EPA revised the primary SO_2 NAAQS to an hourly standard of 75 parts per billion (ppb) based on a 3-year average of the annual 99th percentile of 1-hour daily maximum concentrations. Pursuant to section 110(a)(1) of the CAA, states are required to submit SIPs meeting the applicable requirements of section 110(a)(2) within three years after promulgation of a new or revised NAAQS or within such shorter period as EPA may prescribe. Section 110(a)(2) requires states to address basic SIP elements such as requirements for monitoring, basic program requirements and legal authority that are designed to assure attainment and maintenance of the NAAQS. States were required to submit such SIPs for the 2010 1-hour SO_2 NAAQS to EPA no later than June 2, 2013.

EPA is acting upon the SIP submission from Kentucky that addresses the infrastructure requirements of CAA sections 110(a)(1) and 110(a)(2) for the 2010 1-hour SO_2 NAAQS. In a notice of proposed rulemaking (NPRM) published on April 4, 2016 (81 FR 19098), EPA proposed to approve Kentucky's 2010 1-hour SO_2 NAAQS infrastructure SIP submission submitted on April 26, 2013, with the exception of the minor source program requirements of section 110(a)(2)(C) and the interstate transport provisions pertaining to the contribution to nonattainment or interference with maintenance in other states and visibility protection requirements of section 110(a)(2)(D)(i)(I) and (II) (prongs 1, 2, and 4). The details of Kentucky's submission and the rationale for EPA's actions are explained in the proposed rulemaking. Comments on the NPRM were due on or before May 4, 2016. EPA received an adverse comment on the proposed action. Additionally, EPA

acknowledges an erroneous date cited in the Technical Support Document (TSD) to its April 4, 2016, proposal action. For the Kentucky entry in Table 1 of EPA's TSD, ''November 23, 2014 (79 FR 65143)'' is listed in two places. These two entries should read: ''November 3, 2014 (79 FR 65143)''.

II. Response to Comments

EPA received an adverse comment on the April 4, 2016, NPRM to approve Kentucky's 2010 1-hour SO_2 NAAQS infrastructure SIP submission intended to meet the CAA requirements for the 2010 1-hour SO_2 NAAQS. A summary of the comment and EPA's response is provided below. The comment is also available in the docket for this final rulemaking action.

Comment: The Commenter stated, ''EPA cannot approve the PSD [Prevention of Significant Deterioration] related elements of this Infrastructure SIP until the Jefferson County local air authority has incorporated $PM_{2.5}$ [fine particulate matter] increments into its PSD program.''

Response: EPA does not agree with the Commenter's assertion that EPA cannot approve the PSD elements of Kentucky's submittal until the Jefferson County Air Pollution Control District incorporates $PM_{2.5}$ increments into its PSD program. As discussed in the April 4, 2016, NPRM (*see* 81 FR 19104), Kentucky's SIP-approved PSD permitting program for major sources contains required structural PSD requirements, including $PM_{2.5}$ increments. *See* 79 FR 65143, November 3, 2014. Kentucky's rule does not have any exclusion, exception or exemption for individual localities such as Jefferson County, Kentucky. Accordingly, the PSD permitting requirements, including the $PM_{2.5}$ increments, apply in all areas of the Commonwealth, including Jefferson County.

Kentucky has a statutory provision that addresses local air pollution control programs at KRS 224.20–130, *Concurrent jurisdiction with local district—Effect.* This section cross references local programs established under KRS chapter 77, which is the statutory authority for the Jefferson County program. KRS 224.20–130 requires the Energy and Environment Cabinet to approve local programs; provides that local programs cannot be less stringent; provides that, upon approval, there is concurrent jurisdiction; and provides that this (approval of a local program with concurrent jurisdiction) in no way diminishes the authority of the cabinet to administer and enforce chapter 224—which is the chapter that comprises and/or authorizes Kentucky's SIP regulations, including its PSD program. Also, subsection (2) of KRS 224.20–130 allows the cabinet to suspend or revoke approval, or modify the authority granted to a local air pollution control program in Kentucky if the cabinet determines, after public hearing with notice, that a local air pollution control program is not being administered in accordance with the statutes and regulations of the cabinet or the district. Further, subsection (4) states that, ''The cabinet shall be empowered to enforce any and all regulations or standards in any district when concurrent jurisdiction is granted.''

Therefore, Kentucky's PSD program applies to the entire Commonwealth, including Jefferson County, and any deficiencies in the PSD program for Jefferson County would not impact the sufficiency of Kentucky's SIP for the PSD infrastructure elements.

III. Final Action

With the exception of the minor source program requirements of section 110(a)(2)(C) and the interstate transport provisions pertaining to the contribution to nonattainment or interference with maintenance in other states and visibility protection requirements of section 110(a)(2)(D)(i)(I) and (II) (prongs 1, 2, and 4), EPA is taking final action to approve Kentucky's infrastructure submission submitted on April 26, 2013, for the 2010 1-hour SO_2 NAAQS for the above described infrastructure SIP requirements. EPA is taking final action to approve Kentucky's infrastructure SIP submission for the 2010 1-hour SO_2 NAAQS because the submission is consistent with section 110 of the CAA.

IV. Statutory and Executive Order Reviews

Under the CAA, the Administrator is required to approve a SIP submission that complies with the provisions of the Act and applicable federal regulations. *See* 42 U.S.C. 7410(k); 40 CFR 52.02(a). Thus, in reviewing SIP submissions, EPA's role is to approve state choices, provided that they meet the criteria of the CAA. Accordingly, this action merely approves state law as meeting federal requirements and does not impose additional requirements beyond those imposed by state law. For that reason, this action:

- Is not a significant regulatory action subject to review by the Office of Management and Budget under Executive Orders 12866 (58 FR 51735, October 4, 1993) and 13563 (76 FR 3821, January 21, 2011);
- does not impose an information collection burden under the provisions of the Paperwork Reduction Act (44 U.S.C. 3501 *et seq.*);
- is certified as not having a significant economic impact on a substantial number of small entities under the Regulatory Flexibility Act (5 U.S.C. 601 *et seq.*);
- does not contain any unfunded mandate or significantly or uniquely affect small governments, as described in the Unfunded Mandates Reform Act of 1995 (Pub. L. 104–4);
- does not have Federalism implications as specified in Executive Order 13132 (64 FR 43255, August 10, 1999);
- is not an economically significant regulatory action based on health or safety risks subject to Executive Order 13045 (62 FR 19885, April 23, 1997);
- is not a significant regulatory action subject to Executive Order 13211 (66 FR 28355, May 22, 2001);
- is not subject to requirements of Section 12(d) of the National Technology Transfer and Advancement Act of 1995 (15 U.S.C. 272 note) because application of those requirements would be inconsistent with the CAA; and
- does not provide EPA with the discretionary authority to address, as appropriate, disproportionate human health or environmental effects, using practicable and legally permissible methods, under Executive Order 12898 (59 FR 7629, February 16, 1994).

The SIP is not approved to apply on any Indian reservation land or in any other area where EPA or an Indian tribe has demonstrated that a tribe has jurisdiction. In those areas of Indian country, the rule does not have tribal implications as specified by Executive Order 13175 (65 FR 67249, November 9, 2000), nor will it impose substantial direct costs on tribal governments or preempt tribal law.

The Congressional Review Act, 5 U.S.C. 801 *et seq.,* as added by the Small Business Regulatory Enforcement Fairness Act of 1996, generally provides that before a rule may take effect, the agency promulgating the rule must submit a rule report, which includes a copy of the rule, to each House of the Congress and to the Comptroller General of the United States. EPA will submit a report containing this action and other required information to the U.S. Senate, the U.S. House of Representatives, and the Comptroller General of the United States prior to publication of the rule in the **Federal Register**. A major rule cannot take effect until 60 days after it is published in the **Federal Register**. This action is not a ''major rule'' as defined by 5 U.S.C. 804(2).

Under section 307(b)(1) of the CAA, petitions for judicial review of this action must be filed in the United States Court of Appeals for the appropriate circuit by February 6, 2017. Filing a petition for reconsideration by the Administrator of this final rule does not affect the finality of this action for the purposes of judicial review nor does it extend the time within which a petition for judicial review may be filed, and shall not postpone the effectiveness of such rule or action. This action may not be challenged later in proceedings to enforce its requirements. *See* section 307(b)(2).

List of Subjects in 40 CFR Part 52

Environmental protection, Air pollution control, Incorporation by reference, Intergovernmental relations, Nitrogen dioxide, Reporting and recordkeeping requirements and Sulfur oxides.

Dated: November 21, 2016.

Heather McTeer Toney,

Regional Administrator, Region 4.

40 CFR part 52 is amended as follows:

PART 52—APPROVAL AND PROMULGATION OF IMPLEMENTATION PLANS

■ 1. The authority citation for part 52 continues to read as follows:

Authority: 42 U.S.C. 7401 *et seq.*

Subpart S—Kentucky

■ 2. Section 52.920(e) is amended by adding a new entry ''110(a)(1) and (2) Infrastructure Requirements for the 2010 1-hour SO_2 National Ambient Air Quality Standard'' at the end of the table to read as follows:

§ 52.920 Identification of plan.

* * * * *

(e) * * *

EPA-APPROVED KENTUCKY NON-REGULATORY PROVISIONS

Name of non-regulatory SIP provision	Applicable geographic or nonattainment area	State submittal date/effective date	EPA approval date	Explanations
*	*	*	*	* * *
110(a)(1) and (2) Infrastructure Requirements for the 2010 1-hour SO_2 NAAQS.	Kentucky	04/26/2013	12/6/2016	With the exception of the minor source program requirements of section 110(a)(2)(C) and the interstate transport requirements of section 110(a)(2)(D)(i)(I) and (II) (prongs 1, 2, and 4).

[FR Doc. 2016–29115 Filed 12–5–16; 8:45 am]

BILLING CODE 6560–50–P

ENVIRONMENTAL PROTECTION AGENCY

40 CFR Part 52

[EPA–R03–OAR–2016–0368; FRL–9955–91–Region 3]

Determination of Attainment by the Attainment Date for the 2008 Ozone National Ambient Air Quality Standards; Pennsylvania; Pittsburgh-Beaver Valley

AGENCY: Environmental Protection Agency (EPA).

ACTION: Final rule.

SUMMARY: The Environmental Protection Agency (EPA) is making a final determination that the Pittsburgh-Beaver Valley, Pennsylvania marginal ozone nonattainment area (the Pittsburgh Area) has attained the 2008 8-hour ozone national ambient air quality standards (the 2008 ozone NAAQS) by the July 20, 2016 attainment date. This determination is based on complete, certified, and quality assured ambient air quality monitoring data for the Pittsburgh Area for the 2013–2015 monitoring period. This determination does not constitute a redesignation to attainment. This action is being taken under the Clean Air Act (CAA).

DATES: This final rule is effective on January 5, 2017.

ADDRESSES: EPA has established a docket for this action under Docket ID Number EPA–R03–OAR–2016–0368. All documents in the docket are listed on the *http://www.regulations.gov* Web site. Although listed in the index, some information is not publicly available, *e.g.,* confidential business information (CBI) or other information whose disclosure is restricted by statute. Certain other material, such as copyrighted material, is not placed on the Internet and will be publicly available only in hard copy form. Publicly available docket materials are available through *http://www.regulations.gov,* or please contact the person identified in the **FOR FURTHER INFORMATION CONTACT** section for additional availability information.

FOR FURTHER INFORMATION CONTACT: Gavin Huang, (215) 814–2042, or by email at *huang.gavin@epa.gov.*

SUPPLEMENTARY INFORMATION:

I. Background

On August 25, 2016 (81 FR 58435), EPA published a notice of proposed rulemaking (NPR) for the Commonwealth of Pennsylvania. In the NPR, EPA proposed to determine, in accordance with its statutory obligations under section 181(b)(2)(A) of the CAA and the provisions of the SIP Requirements Rule (40 CFR 51.1103), that the Pittsburgh Area attained the 2008 ozone NAAQS by the applicable attainment date of July 20, 2016.

II. EPA's Evaluation

Consistent with the requirements contained in 40 CFR part 50, EPA reviewed the ozone ambient air quality monitoring data for the monitoring period from 2013 through 2015 for the Pittsburgh Area, as recorded in the AQS database. State and local agencies responsible for ozone air monitoring networks supplied and quality assured the data. EPA determined that the monitoring sites with valid data had design values equal to or less than 0.075 ppm based on the 2013–2015 monitoring period. Therefore, the Pittsburgh Area attained the 2008 ozone NAAQS.

Other specific requirements of this determination of attainment by the attainment date and the rationale for EPA's action are explained in the NPR and will not be restated here. No public comments were received on the NPR.

III. Final Action

EPA is making a final determination, in accordance with its statutory

obligations under section 181(b)(2)(A) of the CAA and the provisions of the SIP Requirements Rule (40 CFR 51.1103), that the Pittsburgh Area attained the 2008 ozone NAAQS by the applicable attainment date of July 20, 2016. This determination of attainment does not constitute a redesignation to attainment. Redesignations require states to meet a number of additional criteria, including EPA approval of a state plan to maintain the air quality standard for 10 years after redesignation.

IV. Statutory and Executive Order Reviews

A. General Requirements

This rulemaking action finalizes a determination of attainment on the 2008 ozone NAAQS based on air quality and does not impose additional requirements. For that reason, this determination of attainment:

- Is not a ''significant regulatory action'' subject to review by the Office of Management and Budget under Executive Orders 12866 (58 FR 51735, October 4, 1993) and 13563 (76 FR 3821, January 21, 2011);
- does not impose an information collection burden under the provisions of the Paperwork Reduction Act (44 U.S.C. 3501 *et seq.*);
- is certified as not having a significant economic impact on a substantial number of small entities under the Regulatory Flexibility Act (5 U.S.C. 601 *et seq.*);
- does not contain any unfunded mandate or significantly or uniquely affect small governments, as described in the Unfunded Mandates Reform Act of 1995 (Pub. L. 104–4);
- does not have federalism implications as specified in Executive Order 13132 (64 FR 43255, August 10, 1999);
- is not an economically significant regulatory action based on health or safety risks subject to Executive Order 13045 (62 FR 19885, April 23, 1997);
- is not a significant regulatory action subject to Executive Order 13211 (66 FR 28355, May 22, 2001);
- is not subject to requirements of Section 12(d) of the National Technology Transfer and Advancement Act of 1995 (15 U.S.C. 272 note) because application of those requirements would be inconsistent with the CAA; and
- does not provide EPA with the discretionary authority to address, as appropriate, disproportionate human health or environmental effects, using practicable and legally permissible methods, under Executive Order 12898 (59 FR 7629, February 16, 1994).

In addition, this rule does not have tribal implications as specified by Executive Order 13175 (65 FR 67249, November 9, 2000), because the SIP is not approved to apply in Indian country located in the state, and EPA notes that it will not impose substantial direct costs on tribal governments or preempt tribal law.

B. Submission to Congress and the Comptroller General

The Congressional Review Act, 5 U.S.C. 801 *et seq.,* as added by the Small Business Regulatory Enforcement Fairness Act of 1996, generally provides that before a rule may take effect, the agency promulgating the rule must submit a rule report, which includes a copy of the rule, to each House of the Congress and to the Comptroller General of the United States. EPA will submit a report containing this action and other required information to the U.S. Senate, the U.S. House of Representatives, and the Comptroller General of the United States prior to publication of the rule in the **Federal Register**. A major rule cannot take effect until 60 days after it is published in the **Federal Register**. This action is not a ''major rule'' as defined by 5 U.S.C. 804(2).

C. Petitions for Judicial Review

Under section 307(b)(1) of the CAA, petitions for judicial review of this action must be filed in the United States Court of Appeals for the appropriate circuit by February 6, 2017. Filing a petition for reconsideration by the Administrator of this final rule does not affect the finality of this action for the purposes of judicial review nor does it extend the time within which a petition for judicial review may be filed, and shall not postpone the effectiveness of such rule or action.

This action determining that the Pittsburgh Area attained the 2008 ozone NAAQS by its July 20, 2016 attainment date may not be challenged later in proceedings to enforce its requirements. (See section 307(b)(2).)

List of Subjects in 40 CFR Part 52

Environmental protection, Air pollution control, Ozone, Incorporation by reference, Intergovernmental relations, Reporting and recordkeeping requirements.

Dated: November 4, 2016.

Shawn M. Garvin,

Regional Administrator, Region III.

40 CFR part 52 is amended as follows:

PART 52—APPROVAL AND PROMULGATION OF IMPLEMENTATION PLANS

■ 1. The authority citation for part 52 continues to read as follows:

Authority: 42 U.S.C. 7401 *et seq.*

Subpart NN—Pennsylvania

■ 2. In § 52.2056, paragraph (n) is added to read as follows:

§ 52.2056 Determinations of attainment.

* * * * *

(n) EPA has determined based on 2013 to 2015 ambient air quality monitoring data, that the Pittsburgh-Beaver Valley, Pennsylvania marginal ozone nonattainment area has attained the 2008 8-hour ozone national ambient air quality standard (NAAQS) by the applicable attainment date of July 20, 2016. Therefore, EPA has met the requirement pursuant to CAA section 181(b)(2)(A) to determine, based on the area's air quality as of the attainment date, whether the area attained the 2008 8-hour ozone NAAQS. EPA also determined that the Pittsburgh-Beaver Valley, Pennsylvania marginal nonattainment area will not be reclassified for failure to attain by its applicable attainment date pursuant to section 181(b)(2)(A).

[FR Doc. 2016–29118 Filed 12–5–16; 8:45 am]

BILLING CODE 6560–50–P

ENVIRONMENTAL PROTECTION AGENCY

40 CFR Part 228

[FRL–9955–13–Region 1]

Ocean Disposal; Designation of a Dredged Material Disposal Site in Eastern Region of Long Island Sound; Connecticut

AGENCY: Environmental Protection Agency (EPA).

ACTION: Final rule.

SUMMARY: With the publication of this Final Rule, the Environmental Protection Agency (EPA) is designating the Eastern Long Island Sound Disposal Site (ELDS), located offshore from New London, Connecticut, for the disposal of dredged material from harbors and navigation channels in eastern Long Island Sound and Little Narragansett Bay in the states of Connecticut, New York, and Rhode Island. This action is necessary to provide a long-term, open-water dredged material disposal site as an alternative for the possible future disposal of such material. This disposal site designation is subject to restrictions designed to support the goal of reducing or eliminating the disposal of dredged material in Long Island Sound.

The basis for this action is described herein and in the Final Supplemental Environmental Impact Statement

(FSEIS) released by EPA on November 4, 2016 in conjunction with this Final Rule. The FSEIS identifies designation of the ELDS as the preferred alternative from the range of options considered.

DATES: This final rule is effective on January 5, 2017.

ADDRESSES: EPA has established a docket for this action under Docket Identification No. EPA–R01–OW–2016–0239. All documents in the docket are listed on the *http://www.regulations.gov* Web site. Publically available docket materials are also available from EPA's Web site *https://www.epa.gov/ocean-dumping/dredged-material-management-long-island-sound.*

FOR FURTHER INFORMATION CONTACT: Jean Brochi, U.S. Environmental Protection Agency, New England Regional Office, 5 Post Office Square, Suite 100, Mail Code: OEP06–1, Boston, MA 02109–3912, telephone (617) 918–1536, electronic mail: *brochi.jean@epa.gov.*

SUPPLEMENTARY INFORMATION: Organization of this document. The following outline is provided to aid in locating information in this preamble.

I. Final Action
II. Background
III. Purpose
IV. Potentially Affected Entities
V. Disposal Site Description
VI. Summary of Public Comments and EPA's Responses
VII. Changes From the Proposed Rule
VIII. Compliance With Statutory and Regulatory Requirements
A. Marine Protection, Research, and Sanctuaries Act and Clean Water Act
B. National Environmental Policy Act
C. Coastal Zone Management Act
D. Endangered Species Act
E. Magnuson-Stevens Fishery Conservation and Management Act
IX. Restrictions
X. Supporting Documents
XI. Statutory and Executive Order Reviews

I. Final Action

EPA is publishing this Final Rule to designate the ELDS to provide an environmentally sound, open-water disposal option for possible use in managing dredged material from harbors and navigation channels in eastern Long Island Sound and its vicinity in the states of Connecticut, New York, and Rhode Island. The site designation is effective for an indefinite period of time. The use of the site is subject to restrictions designed to reduce or eliminate open-water disposal of dredged material in Long Island Sound, and to ensure protection of the environment if and when the site is used.

The site designation process has been conducted consistent with the requirements of the Marine Protection, Research, and Sanctuaries Act (MPRSA), National Environmental Policy Act (NEPA), Coastal Zone Management Act (CZMA), and other applicable federal and state statutes and regulations. Compliance with these requirements is described in detail in Section VIII (''Compliance with Statutory and Regulatory Requirements''). The basis for this federal action is further described in an FSEIS that identifies EPA designation of the ELDS as the preferred alternative. The FSEIS was released on November 4, 2016 on the EPA Region 1 Web site: *https://www.epa.gov/ocean-dumping/final-supplemental-environmental-impact-statement-eastern-long-island-sound* and is provided as a supporting document in the docket for this Final Rule. See 40 CFR 1506.10. This Final Rule also serves as EPA's Record of Decision (ROD) for the NEPA review supporting the designation of this site.

Dredged material disposal sites designated by EPA under the MPRSA are subject to detailed management and monitoring protocols to track site conditions and prevent the occurrence of unacceptable adverse effects. The management and monitoring protocols for the ELDS are described in the Site Management and Monitoring Plan (SMMP) that is incorporated into the FSEIS as Appendix I. *See* 33 U.S.C. 1412(c)(3). EPA is authorized to close or limit the use of these sites to further disposal activity if their use causes unacceptable adverse impacts to the marine environment or human health.

The designation of this disposal site does not constitute or imply EPA's approval of open-water disposal of dredged material at the site from any specific project. Disposal of dredged material from federal projects, or non-federal projects involving more than 25,000 cubic yards (cy) of material, will not be allowed at the ELDS until the proposed disposal operation first receives, among other things, proper authorization from the U.S. Army Corps of Engineers (USACE) under MPRSA section 103. (Proposals to dispose of material from non-federal projects involving less than 25,000 cy yards of material are subject to regulation under Section 404 of the Clean Water Act.) In addition, any authorization by the USACE under MPRSA section 103 is subject to EPA review under MPRSA section 103(c), and EPA may concur, concur with conditions, or decline to concur with the authorization as a result of such review. In order to properly obtain authorization to dispose of dredged material at the ELDS under the MPRSA, the dredged material proposed for disposal must first satisfy the applicable criteria for testing and evaluating dredged material specified in EPA regulations at 40 CFR part 227, and it must be determined in accordance with EPA regulations at 40 CFR part 227, subpart C, that there is a need for open-water disposal (*i.e.,* that there is no practicable dredged material management alternative to open-water disposal with less adverse environmental impact). In addition, any proposal to dispose of dredged material under the MPRSA at the designated site will need to satisfy all the site restrictions included in the Final Rule as part of the site designation. *See* 40 CFR 228.8 and 228.15(b)(6).

II. Background

On April 27, 2016, EPA published in the **Federal Register** (81 FR 24748) a proposed rule (the Proposed Rule) to designate an Eastern Long Island Sound Dredged Material Disposal Site (ELDS), located offshore from New London, Connecticut. EPA's Proposed Rule also stated that two other alternative sites, the Niantic Bay and Cornfield Shoals disposal sites and CSDS), met the site selection criteria in the Ocean Dumping Regulations and could be designated for long-term use. EPA indicated that it was not proposing to designate those two alternative sites but requested public comment on the advisability of using those sites.

On July 7, 2016, EPA published in the **Federal Register** (81 FR 44220) a final rule to amend the 2005 rule that designated the Central and Western Long Island Sound dredged material disposal sites (CLDS and WLDS, respectively). The rule amendments established new restrictions on the use of those sites to support the goal of reducing or eliminating open-water disposal in Long Island Sound. The restrictions include standards and procedures to promote the development and use of practicable alternatives to open-water disposal, including establishment of an interagency ''Steering Committee'' and ''Regional Dredging Team'' that will oversee implementation of the rule. As explained in the Proposed Rule for the ELDS, the restrictions applicable to the CLDS and WLDS also will be applied to use of the ELDS.

III. Purpose

The purpose of EPA's action is to provide a long-term, environmentally acceptable dredged material disposal option for potential use by the USACE and other federal, state, county, municipal, and private entities that must dredge channels, harbors, marinas,

and other aquatic areas in eastern Long Island Sound in order to maintain conditions for safe navigation for marine commerce and recreation, and for military and public safety operations. This action is necessary because: (1) Periodic dredging is needed to maintain safe navigation and occasionally improve ports and harbors to maintain competitiveness and support a changing economy, and open-water dredged material disposal is necessary when practicable alternative means of managing the material are not available; (2) EPA determined that dredged material disposal/handling needs in the eastern region of Long Island Sound exceed the available disposal/handling capacity in that region; (3) the two currently used disposal sites in this region, the New London Disposal Site (NLDS) and CSDS, are only authorized for use until December 23, 2016; (4) there are currently no disposal sites designated for long-term use in the eastern Long Island Sound region; and (5) under the MPRSA, an EPA designation is required for any long-term open-water dredged material disposal site in Long Island Sound.

In addition, the closest designated sites outside the eastern Long Island Sound region are the Central Long Island Sound Disposal Site (CLDS) and the Rhode Island Sound Disposal Site (RISDS), and both are too far from dredging centers in the eastern region of the Sound to be reasonable alternatives to the proposed site designation. For example, the distance from New London Harbor to the CLDS is 34.7 nautical miles (nmi) and to the RISDS is 44.5 nmi. The Western Long Island Sound Disposal Site (WLDS) is approximately 59 nmi west of New London Harbor, making it an even less feasible alternative.

While the CLDS, WLDS, and RISDS have all been determined to be environmentally sound sites for receiving suitable dredged material, proposing to use any of them for suitable dredged material from the eastern region of Long Island Sound would be problematic, and EPA would consider them to be options of last resort. Using the CLDS or RISDS would greatly increase the transport distance for, and duration of, open-water disposal for dredging projects from the eastern Long Island Sound region. This, in turn, would greatly increase the cost of such projects and would likely render many dredging projects too expensive to conduct. For example, maintenance dredging of the U.S. Navy Submarine Base berths planned for 2016–2020 is expected to generate about 75,000 cy of suitable material; the estimated cost of disposal at the ELDS is $31/cy for a total cost of $2,325,000, while disposal at the CLDS is estimated at $64/cy for a total of $4,800,000. An improvement (deepening) project to accommodate a larger class of submarine planned for 2016–2025 is expected to generate about 350,000 cy; the estimated cost of disposal at the ELDS is $26/cy for a total cost of $9,100,000, while disposal at the CLDS is estimated at $57/cy for a total of $19,950,000 (USACE, 2016b). Thus, the longer haul distance more than doubles the cost to the public for the federal government to dredge the same project.

Furthermore, the greater transport distances would be environmentally detrimental, in that they would entail greater energy use, increased air emissions, and increased risk of spills and short dumps (FSEIS, Section 2.1). Regarding air emissions, increased hauling distances might require using larger scows with more powerful towing vessels, which would use more fuel and cause more air pollution. Longer haul distances also may increase the amount of time necessary to complete a dredging project, resulting in an extended period of disruption to the areas being dredged.

In its Long Island Sound Dredged Material Management Plan (DMMP), the USACE projected that dredging in eastern Long Island Sound would generate approximately 22.6 million cubic yards (mcy) of dredged material over the next 30 years. Of the total amount of 22.6 mcy, approximately 13.5 mcy was projected to be fine-grained sediment that meets MPRSA and Clean Water Act (CWA) standards for aquatic disposal (*i.e.,* ''suitable'' material), and 9.1 mcy was projected to be coarse-grained sand that also meets MPRSA and CWA standards for aquatic disposal (*i.e.,* also ''suitable'' material). In addition, the DMMP projected that approximately 80,900 cy of material from eastern Long Island Sound would be fine-grained sediment that does not meet MPRSA and CWA standards for aquatic disposal (*i.e.,* ''unsuitable'' material).

In response to comments asserting that no disposal site is needed in the eastern region of Long Island Sound, and comments urging that the size of any site be reduced or minimized, EPA asked the USACE to revisit once more its estimate of disposal capacity needs and to revise the figures, if appropriate. Although the values from the DMMP reflected substantial analysis and public input, the USACE agreed to reassess the capacity needs in coordination with EPA. This reassessment has resulted in a projected disposal capacity need of approximately 20 mcy, which still supports the conclusion that a disposal site is needed in the eastern region of the Sound. The reassessment of capacity needs is discussed further in Sections V (''Disposal Site Description'') and VI (''Summary of Public Comments and EPA's Responses'') of this document and in Section 5.8 of the FSEIS.

The detailed assessment of alternatives to open-water disposal in the USACE's DMMP determined that, while the sand generated in this region may be able to be used beneficially to nourish beaches, there are not practicable alternatives to open-water disposal with sufficient capacity to handle the projected volume of fine-grained sediment. As described in the Proposed Rule and in Section IX of the Final Rule itself, EPA has placed restrictions on the use of all Long Island Sound dredged material disposal sites that are designed to facilitate and promote the use of practicable alternatives to open-water disposal whenever available, but EPA has determined that one designated open-water disposal site is needed in eastern Long Island Sound.

Given the need to provide an open-water disposal site as an option for dredged material management, EPA designation of a long-term dredged material disposal site(s) provides environmental benefits. First, when a site being used under the USACE's short-term site selection authority is due to expire, designation by EPA is the only way to authorize continued use of that site, even if the site is environmentally suitable or even environmentally preferable to all other sites. With the NLDS and CSDS closing in December 2016, EPA's site designation studies were designed to determine whether these or any other sites should be designated for continued long-term use. Congress has directed that the disposal of dredged material should take place at EPA-designated sites, rather than USACE-selected sites, when EPA-designated sites are available (*see* MPRSA 103(b)). Consistent with that Congressional intent, EPA's policy is that it is generally environmentally preferable to concentrate any open-water disposal at sites that have been used historically and at fewer sites, rather than relying on the selection by the USACE of multiple sites to be used for a limited time, *see* 40 CFR 228.5(e).

Second, MPRSA criteria for selecting and designating sites require EPA to consider previously used disposal sites, with active or historically used sites given preference in the evaluation (40 CFR 228.5(e)). This preference will concentrate the effects, if any, of open-

water disposal of dredged material to discrete areas that have already received dredged material, and avoid distributing any effects over a larger geographic area. Finally, unlike USACE-selected sites, EPA-designated sites require a SMMP that will help ensure environmentally sound monitoring and management of the sites.

Designating an environmentally sound open-water disposal site to allow for and facilitate necessary dredging in the eastern region of Long Island Sound also will yield a number of public benefits. First, designating an environmentally sound disposal site will yield economic benefits. There are a large number of important navigation-dependent businesses and industries in the eastern Long Island Sound region, ranging from shipping (especially the movement of petroleum fuels and the shipping of bulk materials), to recreational boating-related businesses, marine transportation, commercial and recreational fishing, interstate ferry operations, ship building, and military and public safety operations, such as those associated with the U.S. Naval Submarine Base in Groton and the U.S. Coast Guard facilities in New London. These businesses and industries contribute substantially to the region's economic output, the gross state product (GSP) of the bordering states, and tax revenue. Continued access to navigation channels, harbors, berths, and mooring areas is vital to ensuring the continued economic health of these industries, and to preserving the ability of the region to import fuels, bulk supplies, and other commodities at competitive prices. Second, preserving navigation channels, marinas, harbors, berthing areas, and other marine resources, improves the quality of life for residents and visitors to the eastern Long Island Sound region by facilitating recreational boating and associated activities, such as fishing and sightseeing. Finally, by facilitating dredging needed to support U.S. Navy and Coast Guard operations, designation of an open-water dredged material disposal site also supports national defense planning and operations as well as public safety.

IV. Potentially Affected Entities

Entities potentially affected by this action are persons, organizations, or government bodies seeking to dispose of dredged material in waters of eastern Long Island Sound, subject to the requirements of the MPRSA and/or the CWA and their implementing regulations. This rule is expected to be primarily of relevance to: (a) Private parties seeking permits from the USACE to transport more than 25,000 cubic yards of dredged material for the purpose of disposal into the waters of eastern Long Island Sound; (b) the USACE for its own dredged material disposal projects; and (c) other federal agencies seeking to dispose of dredged material in eastern Long Island Sound. Potentially affected entities and categories of entities that may seek to use the designated dredged material disposal site and would be subject to the proposed rule include:

Category	Examples of potentially affected entities
Federal government	USACE (Civil Works Projects), and other federal agencies.
State, local, and tribal governments	Governments owning and/or responsible for ports, harbors, and/or berths, government agencies requiring disposal of dredged material associated with public works projects.
Industry and general public	Port authorities, shipyards and marine repair facilities, marinas and boatyards, and berth owners.

This table is not intended to be comprehensive, but rather provides a guide for readers regarding the types of entities that could potentially be affected by this Final Rule. EPA notes that nothing in this rule alters the jurisdiction or authority of EPA, the USACE, or the types of entities regulated under the MPRSA and/or CWA. Questions regarding the applicability of this Final Rule to a particular entity should be directed to the contact person listed in the preceding **FOR FURTHER INFORMATION CONTACT** section.

V. Disposal Site Description

This rule designates the ELDS, but with site boundaries modified from those in the Proposed Rule, for open-water disposal of dredged material for several reasons. First, the entire ELDS is a containment site, which will protect the environment by retaining the dredged material within the site and, accordingly, will also support effective site management and monitoring. Second, the NLDS, which is immediately to the east of the ELDS, has been used for dredged material disposal for over 60 years, and monitoring of the NLDS over the past 35 years has determined that past and present management practices have been successful in minimizing short-term, long-term, and cumulative impacts to water quality and benthic habitat in this vicinity. EPA has determined that the ELDS also can be successfully managed. Third, designating the ELDS, which is immediately adjacent to the NLDS, would be consistent with USEPA's ocean disposal regulations, which indicate a preference for designating disposal sites in areas that have been used in the past, rather than new, relatively undisturbed areas (40 CFR 228.5(e)).

Finally, in response to public comments, which are described further in Section VI (''Summary of Public Comments and EPA's Responses''), EPA is designating an ELDS that has been relocated farther to the west and is smaller in size than the preferred alternative described in the Proposed Rule. Thus, the boundaries of the ELDS have been redrawn for this Final Rule. For the Proposed Rule, EPA proposed an ELDS with an estimated capacity of 27 mcy based on an estimated need for disposal capacity of approximately 22.6 mcy for material from the eastern region of the Sound, which in turn was based on the dredging needs assessment from the DMMP. *See* 81 FR 24750. EPA received comments stating that there was no need for a disposal site to be designated in the eastern region of Long Island Sound. As part of its consideration of, and response to, these comments, EPA requested the USACE prepare a more refined estimate of the dredged material disposal capacity needed for sediments projected to be dredged from the eastern region of the Sound. The USACE undertook this analysis and projected that a disposal capacity of approximately 20 mcy (based on water volume below a depth of 59 feet [18 meters] and slope calculations, with a buffer zone) would likely be sufficient. This estimate reflects a variety of factors, some of which involve an unavoidable degree of uncertainty. These factors include the following: Specific dredging projects currently projected within the region (including possible ''improvement projects'' to further deepen channels or berthing areas); how much of each type of material (*e.g.,* sand, suitable and unsuitable fine-grained material) is estimated to be generated by each project; how much of this material is estimated to require open-water disposal; the possibility of increased

dredging needs caused by larger-than-normal storms; and a ''bulking factor'' of approximately 10 percent. More specifically, the revised projected disposal capacity need of approximately 20 mcy is based on the need to accommodate approximately 12.5 mcy of suitable fine-grained sediment; 2.8 mcy from potential improvement (deepening) dredging projects; 1.8 mcy of shoal material resulting from extreme storm events; 1.1 mcy of sand (recognizing that beach nourishment may not be a practicable alternative for all 9.1 mcy of the projected sand); and 160,000 cy for the excavation of Confined Aquatic Disposal cells (for material unsuitable for open-water disposal); for a total of 18,364,500 cy; and a bulking factor of approximately 10 percent of the total, which brings the total to about 20 mcy. The ''bulking factor'' assumes that dredged material placed at a disposal site is relatively unconsolidated and, thus, will require more capacity when it is placed at a disposal site than it occupied when in it was in a consolidated state on the seafloor prior to dredging. EPA discussed this disposal capacity needs analysis with the USACE before, during, and after its development, and EPA has also independently assessed it. Based on all of this, EPA regards the disposal capacity needs analysis to be reasonable, especially in light of the unavoidable uncertainty associated with some of its elements.

EPA also received comments opposing designation of the ELDS but expressing a willingness to accept the NBDS site, lying farther in Connecticut waters. EPA regards these comments to be at least suggestive of a desire to move the site farther from New York waters, while recognizing that such comments do not necessarily indicate an acceptance of an ELDS relocated to lie exclusively in Connecticut waters. In addition, EPA received comments supporting the ELDS but urging that its eastern boundary be pushed westward farther away from the submarine transit corridor in that area of the Sound. Finally, EPA received several comments opposing designation of the NBDS due to its proximity to the Millstone Power Plant.

Taking all of these comments and the above dredged material disposal capacity needs analysis into account, EPA has redrawn the boundaries of the ELDS. The site has been moved to the west so that it avoids the submarine transit corridor. The entire site now also lies in Connecticut waters approximately 0.2 nm from New York waters. In addition, the northern and southern site boundaries were modified to avoid two areas of rocky outcroppings that might provide habitat for fish and other marine life that are attracted to ''structure'' on the seafloor. EPA has determined that the reconfigured ELDS would provide approximately 20 mcy of disposal capacity, which will meet the disposal capacity need estimated by the USACE.

The following site description is based on information in section 3.4.3 of the FSEIS and other support documents. Specifically, Figure 5.6 in the FSEIS show the location of the site and Table 5–11 provides coordinates for the site boundaries.

The ELDS, as described in the Proposed Rule, comprised approximately the western half of the existing NLDS, along with Sites NL-Wa and NL-Wb, which are adjacent areas immediately to the west of the NLDS. The ELDS now being designated excludes the NLDS entirely and encompasses most of former Site NL-Wa (excluding the northern bedrock area) and former Site NL-Wb (excluding the southern bedrock area) (*see* FSEIS, Figure 5.6). The ELDS combines these two areas, forming an irregularly-shaped polygon that is 1 x 1.5 nmi, but that excludes the two previously described bedrock areas for a total area of approximately 1.3 square nautical miles (nmi^2).

Water depths in the ELDS range from approximately 59 feet (18 m) in the north to 100 feet (30 m) in the south. The seafloor at the site consists of mostly flat, sandy areas, sloping gradually from north to south. However, there is an area of boulders and bedrock in the northern part of former Site NL-Wa that has been excluded from the reconfigured site boundaries due to its potential value as fisheries habitat. This boulder area may be a lag deposit of a glacial moraine. The water depth in parts of the boulder area is shallower than 59 feet (18 m). The southwestern corner of former Site NL-Wb also contains an area of bedrock and boulders, which is an extension of a larger area with a similar substrate further to the south. The reconfigured site boundaries also exclude this area of potentially high value fisheries habitat.

The distance from the ELDS to the closest points of land and the state border are as follows: From the northern boundary to the Connecticut shoreline (specifically, Harkness Memorial State Park in Waterford, Connecticut, is 1.1 nmi; from the southeastern corner to Fishers Island, New York, is 2.3 nmi; and from the southeastern corner to the Connecticut/New York state border is .19 nmi).

VI. Summary of Public Comments and EPA's Responses

EPA received numerous comments on its proposed site designation as described in the DSEIS and Proposed Rule from federal and state elected officials in Connecticut, New York, and Rhode Island; the USACE; the U.S. Navy; the states of Connecticut and New York; a number of municipalities; environmental groups; harbor and marine trade groups; and many private citizens. EPA received comments both in support of and in opposition to its proposed action, with some offering suggested improvements. Documents containing copies of all of the public comments received by EPA and EPA's response to each of the comments have been placed in the public docket and on the Web site identified in the **ADDRESSES** section of this document. There was significant overlap among the comments received. Below, EPA summarizes the main points of the commenters and the Agency's responses.

Comment #1. EPA received many comments in support of the designation of ELDS from members of the Connecticut and Rhode Island Congressional delegations (including a separate submission from Congressman Joseph Courtney), the U.S. Navy, the Connecticut Department of Energy and Environmental Protection, the Connecticut Port Authority, the Connecticut Harbor Management Association, marina and boatyard operators, several local government officials, and private citizens. While many of these comments were of a general nature, some of the commenters also provided additional, specific comments related to the proposed action which are addressed in more detail farther below in this section.

Response #1. EPA acknowledges the support provided for the Proposed Rule to designate the ELDS.

Comment #2. EPA also received a number of nearly identical comments stating opposition to the DSEIS and the Proposed Rule to designate the ELDS, and dredged material disposal in Long Island Sound in general. These included comments from Congressman Lee Zeldin, Suffolk County Legislators Sarah Anker and Al Krupski, the Citizens Campaign for the Environment, the Fishers Island Conservancy, the Group for the East End, the East End Sailing Association, several local government officials, and private citizens.

Some of these commenters found the DMMP to be inadequate, criticized the DMMP's use of the Federal Standard in evaluating alternatives, criticized what they see as a lack of progress toward

reducing or eliminating dredged material disposal in Long Island Sound (and, conversely, a lack of progress in increasing beneficial use), and opposed the preferred alternative of designating the ELDS as a dredged material disposal site. Some of the commenters also provided additional, specific comments, which are addressed in more detail elsewhere in this section.

Response #2. EPA acknowledges, but disagrees with, the opposition to the designation of the ELDS, and to the open-water disposal of dredged material in Long Island Sound in general, expressed by these commenters. At the same time, as discussed further in response to other comments in this section, EPA concludes that some amount of open-water disposal of dredged material into Long Island Sound will be necessary in the future because: (1) Dredging is essential to allow for safe navigation for recreational, commercial and military and public safety vessels in Long Island Sound, and (2) practicable alternatives to open-water disposal are unlikely to be sufficient to accommodate the amount of material projected to be dredged from the eastern region of Long Island Sound over the 30-year planning horizon. Furthermore, the ELDS is an environmentally appropriate disposal site and restrictions on the type of material that can be placed at the ELDS, coupled with regulatory requirements to use available practicable alternatives to open-water disposal, should ensure that any use of the disposal site is minimized and does not harm the environment. The Final Rule includes the same site use restrictions that were promulgated for the CLDS and WLDS and are designed to reduce or eliminate the disposal of dredged material into the waters of Long Island Sound.

In response to concerns regarding the adequacy of the DMMP, EPA believes the DMMP provides useful information to help the agencies achieve the goal of reducing or eliminating the open-water disposal of dredged material in the Sound. To help realize this goal, the DMMP recommends standards and procedures for the agencies to use in the review of dredged material management proposals. In addition, the DMMP identifies and discusses a range of specific alternatives to open-water disposal for each of the 52 Federal Navigation Projects (FNPs) in Long Island Sound. The choice of which alternative (or alternatives) should be implemented for a specific dredging project will be made in the future based on the facts, law and policy that exist at the time of the decision. EPA has provided a more detailed discussion regarding the Federal Standard in the preamble to the final rule for the Central and Western Disposal Sites (81 FR 44220) and in the complete Response to Comments document placed in the public docket and on the Web site identified in the **ADDRESSES** section of this document.

Comment #3. Commenters provided a range of opinions on the need for a disposal site in Eastern Long Island Sound. Some commenters noted that dredging is necessary to ensure recreational boating and commercial shipping access to the waters of Long Island Sound. They point out that marinas, boatyards, and boat clubs provide the main access for the public to get out onto the Sound and these facilities must dredge periodically to maintain sufficient depth for safe berthing and navigation. In addition, they comment that dredging is vital to ensure the continued existence of commercial and recreational industries that generate billions of dollars of economic activity and support thousands of jobs around the Sound. They also note that dredging is important to support the function of national interest facilities, such as the Naval Submarine Base New London and U.S. Coast Guard facilities. These commenters conclude that the ELDS site, as proposed, will meet the dredging needs for the region over the next 30 years and, therefore, there is no need to designate additional sites (such as the CSDS or NBDS).

Other commenters conclude that the dredging needs in the DMMP are vastly overstated, and that there is no need for a disposal site in eastern Long Island Sound. In comments provided by the New York State Department of State (NYSDOS) and New York State Department of Environmental Conservation (NYSDEC), the departments noted that they did not think it was necessary to designate a site in the eastern region of Long Island Sound, but they also recognized the importance of providing stakeholders with a range of options for management of dredged material and recommended EPA designate the NBDS alternative and the NLDS as a ''remediation site.'' EPA received a letter from New York Governor Andrew Cuomo after the end of the comment period expressing opposition to any disposal site designation in eastern Long Island Sound. The Governor's comments further state that the EPA and USACE are incorrectly seeking to justify an eastern site based on the assertion that there is inadequate capacity at the CLDS, WLDS, and Rhode Island Sound Disposal Site (RISDS). (Additional points in the Governor's letter are addressed at Comment and Response #4 below.)

Response #3. EPA agrees that dredging is necessary to provide for safe navigation in and around Long Island Sound and acknowledges that the marine trade industry is an important contributor to the economies of both Connecticut and New York. EPA also agrees that dredging is necessary to provide recreational boating access to Long Island Sound. Recreational boating, and associated activities such as fishing and sightseeing, are important public uses of the Sound that improve the quality of life for residents and visitors alike, while also contributing to the local economy. EPA also notes that by helping to provide for safe navigation, not only does environmentally-sound dredging and dredged material management benefit commercial and recreational uses of Long Island Sound, but it also contributes to national security and public safety by facilitating navigation for U.S. Navy, U.S. Coast Guard, and other types of military and public safety vessels.

EPA disagrees with the suggestion in the letter from NYSDOS and NYSDEC and the Governor's letter that an eastern Long Island Sound disposal site is not needed because there is sufficient capacity at other already designated sites outside of the eastern Sound, such as the CLDS, WLDS, and RISDS. The USACE projected in the DMMP that dredging in Long Island Sound would generate approximately 52.9 mcy of material over the 30-year planning horizon, with approximately 30.3 mcy coming from the western and central regions, and 22.6 mcy from the eastern region. Of the 52.9 mcy, approximately 3.3 mcy of material are projected to be unsuitable for open-water disposal, *see* 81 FR 24750, leaving approximately 49.6 mcy of material that could potentially be placed at an open-water disposal site, if necessary. Of this 49.6 mcy, 15.2 mcy are projected to be sand that could potentially be used for beneficial uses, such as beach nourishment, while 34.4 is projected to be fine-grained material suitable for open-water disposal. Obviously, it is likely that beneficial uses, or some other upland management option, will be found for some amount of the sand, and even some amount of the fine-grained materials, but there is no guarantee of this and it is impossible to be sure in advance what these amounts will be.

As noted in the DSEIS, the CLDS and WLDS are each estimated to have a disposal capacity of about 20 mcy. This 40 mcy of capacity is not enough to take

the full 49.6 mcy of material that could require open-water disposal. The RISDS was designated in 2005 to serve the dredging needs of the Rhode Island and southeastern Massachusetts region.

Furthermore, the predicted amounts of material to be managed are unavoidably imperfect estimates. The actual amounts of material to be managed could be higher (or lower) over the 30-year planning horizon, especially when unpredictable events such as large storms and possible improvement dredging needs are considered. Therefore, EPA deems it reasonable to take a conservative approach and designate sites to ensure adequate disposal capacity is available for all the projected material, recognizing that all the capacity might not end up being needed. Indeed, as per the site use restrictions, EPA will be working with others to try to find beneficial use options for dredged material to minimize how much disposal capacity is needed.

Beyond the issue of having enough disposal capacity, EPA also determined that the CLDS, WLDS, and RISDS would not reasonably serve the needs of the eastern Long Island Sound region once the environmental effects, cost, environmental and safety risks, and logistical difficulties of using such distant sites were taken into account. Thus, part of the basis of EPA's determination that a designated site is needed in eastern Long Island Sound is the longer transit distances from dredging centers in the region to the CLDS, WLDS, and RISDS. These longer trips would result in greater energy use, increased air emissions, increased risk of spills, more difficult project logistics, and greater cost.

As part of its consideration of, and response to, comments asserting that no disposal site is needed in the eastern region of Long Island Sound, and comments urging that the size of any site be reduced or minimized, EPA asked the USACE to revisit once more its estimate of disposal capacity needs and prepare a more refined estimate of the dredged material disposal capacity needed for sediments projected to be dredged from the eastern region of the Sound. Although the values from the DMMP reflected substantial analysis and public input, the USACE agreed to reassess the capacity needs in coordination with EPA. The USACE undertook this analysis and projected that a disposal capacity of approximately 20 mcy would likely be sufficient to meet disposal needs over the next 30 years.

Comment #4. EPA received a letter from New York Governor Andrew Cuomo (and undersigned by 32 federal and state elected officials) after the end of the comment period (dated August 4, 2016). The Governor's letter expresses opposition to *any* disposal site being designated in the eastern region of Long Island Sound and indicates his intent to legally challenge any EPA rule designating a disposal site in eastern Long Island Sound and seek to prevent any disposal pursuant to any such rule. The Governor states that this stance is consistent with the State of New York's decades-long opposition to ''the unabated dumping of dredged materials in Long Island Sound.'' The letter also states that the designation of a site in eastern Long Island Sound is not necessary and may further impede progress toward reducing or eliminating open water disposal, a fundamental component of the rule. In addition, the letter indicates that the State of New York opposes the site designation based on comments provided by NYSDOS and NYSDEC in a joint letter. The letter further states that the EPA and USACE are incorrectly seeking to justify an eastern site based on the assertion that there is inadequate capacity at the WLDS, WLDS, and RISDS.

Response #4. EPA is not legally obligated to consider and respond to the Governor's comment letter in this rulemaking process and environmental review under NEPA because the letter was submitted after the close of the comment period. Nevertheless, EPA has reviewed and given careful consideration to the views presented by Governor Cuomo and provides a response here.

EPA disagrees with the stance presented by the Governor's letter. Without waiting to read EPA's final analysis of whether an appropriate site can be identified, and whether there is a need for such a site to provide a dredged material disposal option to ensure that dredging needed to ensure safe navigation and suitable berthing areas for recreational, commercial, public safety and military vessels, the Governor expresses a plan to sue over *any* rule designating a site in the eastern region of Long Island Sound.

While the Governor's letter suggests that New York ''has for decades opposed'' dredged material disposal in Long Island Sound, the reality is more nuanced. Over the years, as with the Connecticut shore of the Sound, harbors and marinas on the New York shore of Long Island Sound have been dredged and in some cases the sediments have been placed at disposal sites in Long Island Sound, without objection from New York (*e.g.,* Mamaroneck Harbor). At other times, NY has not objected as long as materials were not placed at the NLDS near to Fisher's Island, NY, and were instead placed at the CLDS, just south of New Haven, Connecticut. At other times, when practicable alternatives were available, material dredged from New York waters has been managed at upland sites. The same is true for material dredged from Connecticut waters (*i.e.,* that some material has been placed at open-water disposal sites, while other material has been managed at upland sites). Furthermore, in still other cases, the dredged material from particular projects has been analyzed and found to be unsuitable for open-water disposal and such material has been managed using methods other than open-water disposal (*e.g.,* placement in a confined aquatic disposal [CAD] cell or confined disposal facility [CDF]). Thus, some suitable material from New York has been placed at open-water disposal sites, while some has been managed at upland locations (*e.g.,* for beach nourishment) and unsuitable material has been managed without open-water disposal. EPA supports this type of overall approach (*i.e.,* choosing a management method appropriate to the facts of each individual case from a menu of environmentally sound methods).

Consistent with this more nuanced history, EPA believes these issues should be addressed based on their technical, factual, legal, and policy merits, rather than taking an across-the-board position for or against dredged material disposal in the waters of the Sound. EPA has found that the DMMP and the USACE's more recent updated dredged material disposal capacity needs analysis clearly establish a need for a dredged material disposal site to be designated in the eastern region of the Sound. EPA's analysis, in turn, establishes that the ELDS is an appropriate site for designation. This designation will provide an *option* for potential use for suitable material when practicable alternatives to open-water disposal are not available. Going forward, application of EPA's sediment quality criteria will ensure that only environmentally suitable dredged material can be approved for open-water disposal. Moreover, EPA's existing ocean dumping criteria concerning whether there is a need for open-water disposal, *see* 40 CFR 227.15 and 227.16, coupled with the new site use restrictions applicable to the WLDS, CLDS, and ELDS, *see* 40 CFR 228.15(b)(4)–(6), will ensure that the open-water disposal option is used only when the material is found to be

suitable and no practicable alternatives to open-water disposal are available.

EPA cannot and should not base a decision not to designate an environmentally appropriate disposal site on as of yet unidentified upland management options that might or might not materialize in the future for all the dredged material that needs to be managed. Such an approach would pose an irresponsible threat to safe navigation and the related recreational, commercial, public safety, and national defense activities that depend on it. If, upon EPA designation of the ELDS, there is no actual need for the site (*i.e.,* practicable alternatives are available for every dredging project), then dredged material will not be placed there, as the practicable alternatives will be used instead.

Contrary to the views in Governor Cuomo's letter, the joint comment letter from the NYSDOS and NYSDEC expressed recognition of both the need for dredging to support water-dependent activities and navigation infrastructure and ''the importance of providing stakeholders with a range of options for management of dredged material in LIS . . . .'' Also contrary to the views expressed in the Governor's letter, the NYSDOS/NYSDEC letter emphasizes the State of New York's commitment to ''working with all partners to secure a path forward for achievable, measurable reductions in open water disposal over time . . . ,'' and noted that the state had demonstrated this commitment by NYSDOS's recent concurrence with EPA's amended Final Rule designating the CLDS and WLDS, ''which includes updated policies and procedures intended to meet this goal, and is subject to the additional restrictions agreed to by all Agencies involved.'' The state agencies' letter further pointed out that the ''[t]he proposed rule for eastern LIS contains the same restrictions as those contained within the Final Rule for CLDS and WLDS, with the same ultimate goal of the reduction in open water disposal over time.'' EPA agrees with NYSDOS and NYSDEC that the site use restrictions for the CLDS, WLDS, and ELDS are well designed to pursue and achieve the shared long-term goal of reducing or eliminating the open-water disposal of dredged material in Long Island Sound. At the same time, these restrictions do not obviate the need to designate an appropriate open-water disposal site in the eastern region of the Sound to provide an environmentally sound disposal option for material that cannot be managed in some other way. While the Governor states opposition and an intent to sue over *any* site being designated in the eastern region of the Sound, the NYSDOS/NYSDEC letter instead supports designating both the NBDS and the NLDS (as a ''remediation site'') to provide disposal options in the eastern Sound. EPA agrees that a disposal site should be designated in the eastern Sound, but concludes that designating the reconstituted ELDS is preferable to designating the NBDS and NLDS.

With regard to the Governor's concerns about the capacity at the CLDS, WLDS, and RISDS, see Response #3 above.

Comment #5. Among those supporting the designation of ELDS, a number of commenters suggested revisions to the boundaries of the site for a variety of reasons. Some suggested modifying the northern boundary to avoid burial of rocky, hard-bottom areas that may provide relatively higher quality fish habitat, while others suggested moving the eastern boundary of the proposed ELDS to remove any portion of the site from the submarine transit corridor into the Thames River. Comments from NYSDOS and NYSDEC recommend buffer zones be established around bedrock and archeological areas and included in the Site Management and Monitoring Plan (SMMP) for the ELDS.

Response #5. EPA agrees with the comments to modify the disposal site boundaries to avoid the bedrock and boulder areas and the submarine transit corridor. As discussed in detail above in Section V, EPA is designating the ELDS site with modifications to the boundaries. EPA has redrawn the boundaries of the ELDS to exclude both the rocky, hard-bottom area in the north central portion of the site, and another smaller rocky area in the southwestern corner of the site. Disposal in the ELDS near those areas will be carefully managed, including establishing a 100-meter buffer, to avoid any adverse impacts to these important habitat features. EPA also has shifted the eastern boundary of the ELDS to the west to remove it entirely from the submarine transit corridor. The eastern boundary of the ELDS site is now .367 nmi west of the corridor. This shift of the site also has moved it entirely out of New York waters.

Comment #6. USACE provided comments supporting designation of the Cornfield Shoals Disposal Site (CSDS). The USACE would like a cost-effective open-water alternative for the Connecticut River dredging center, and it states that the availability of the CSDS would help extend the useful life of the CLDS and ELDS by reducing reliance on those sites for placement of materials suitable for CSDS. Another commenter recommends designation of the CSDS to continue its role as a dispersal site for clean, sandy material in order to ''take some pressure off'' while supporting the designation of NBDS, both in lieu of ELDS. NYSDOS and NYSDEC opposed designation of CSDS because of the dispersive nature of the site.

EPA received a joint letter from NYSDOS and NYSDEC that commented that there isn't really a need for a site in eastern Long Island Sound based on historic disposal amounts and capacity at other existing sites like the CLDS, but recognized that some stakeholders in the region need one, so they recommend designation of the NBDS. They further recommended designation of the NLDS as a ''remediation site.'' EPA received comments from others expressing concern that designation of the NBDS would contribute to cumulative impacts to Niantic Bay, which is already stressed by the thermal discharge from the Millstone Nuclear Power Station. CTDEEP, while expressing support for ELDS, also indicated that NBDS, in combination with ELDS, is a viable option if adequate management practices are in place at the site to ensure containment of dredged materials. Another commenter reluctantly supported designating NBDS as the lesser of evils, while still other commenters opposed designation of the NLDS and wanted that site closed. EPA also received comments stating it should have given more consideration to designating a site outside Long Island Sound, including in deep open-ocean waters off Rhode Island and off the continental shelf.

Response #6. While EPA did determine for the Proposed Rule that the CSDS meets the site selection criteria and could be designated in combination with one of the other alternatives, and did seek comments on that position, EPA ultimately decided not to designate the CSDS. EPA agrees that the site is dispersive and lies within a high energy area, which makes the site difficult to manage and monitor. Further, use of this site would need to be limited to receiving material such as sand, which EPA feels can and should typically be used for beneficial uses, instead, such as beach nourishment. Finally, EPA has concluded that designating a single site is preferable to designating multiple sites because dredged material placement would be concentrated in one area and site management and monitoring demands would be reduced. EPA also has concluded that the ELDS will provide an adequate open-water disposal option by itself, while the CSDS would be insufficient by itself

because of the restrictions for site use that EPA would place on it.

Regarding the request to designate the NBDS, based on the dredging needs assessment conducted by the USACE for the DMMP, and the subsequent, more refined dredged material disposal capacity needs analysis by the USACE, EPA is confident that the ELDS is sufficient by itself to meet all the open-water disposal needs of the eastern Long Island Sound region and EPA prefers to designate a single site to serve the region. Therefore, there is no need to designate the NBDS, too. Moreover, designating a second site would entail additional monitoring and management work and expense that can be avoided. Finally, had EPA decided to designate the NBDS, it would only have designated the containment portion of the site to ensure containment of the dredged material, which does not provide enough capacity to meet the projected need. The question of whether designating the NBDS would cause adverse cumulative impacts on the ecology of Niantic Bay when viewed together with effects of the Millstone Nuclear Power Station thermal discharge is now moot because EPA is not designating the NBDS. With regard to consideration of sites outside of Long Island Sound, as discussed in Chapters 3, 4, and 5 in the DSEIS and in the Proposed Rule, EPA considered a wide range of alternatives, including sites in Block Island Sound and on the continental shelf, before deciding to propose designation of the ELDS. The sites in Block Island Sound had a combination of significant marine habitats and strong tidal currents, and were relatively small or were located at a comparatively long distance from the dredging centers in the region. EPA's evaluation also determined that the long distances and travel times between the dredging locations in eastern Long Island Sound and the continental shelf posed significant environmental, operational, safety, and financial concerns, rendering such options unreasonable.

Finally, with regard to the suggestion that the NLDS be designated as a ''remediation site,'' EPA disagrees. Long-term monitoring of the disposal mounds at the NLDS, and surveys conducted in 2013 at all the alternative sites, indicate a healthy and diverse benthic community and no evidence of levels of contamination that would require some sort of ''remediation,'' even if it could be determined what type of remediation would be appropriate for a site in relatively deep water. The ecological parameters and phyla data indicate that, overall, the NLDS has relatively good species diversity and is not dominated by just a few species. These data were consistent with observations at off-site locations outside of the NLDS, although the species richness was slightly lower at the off-site stations (FSEIS Section 4.9.3 and Table 4–11). Toxicity testing conducted in 2013 indicated no potential toxicity at the NLDS or other alternative sites (FSEIS Section 4.6.3 and (Table 4–9). Finally, the majority of the NLDS is already near capacity, with much of the site already at depths that would prevent further placement of dredged material. EPA is not designating the NLDS and that site will close by operation of law on December 23, 2016.

Comment #7. NYSDOS and NYDDEC opined that there were deficiencies in the DSEIS, such as an inadequate alternatives analysis, the absence of comprehensive biological monitoring, and an inadequate cumulative impact assessment. They also suggested that comments they had provided earlier on draft sections of the DSEIS regarding physical oceanography and biological studies were not reflected in the final reports. They also expressed concern about the lack of information about the effectiveness of capping plans at the NLDS.

Response #7. EPA finds the alternatives analysis, biological monitoring, and cumulative impact assessment were all more than adequate. The alternatives analysis included active and historic sites, as well as some other potential sites that had never been used before in eastern Long Island Sound, Block Island Sound, and off the continental shelf south of Long Island. EPA also considered use of the CLDS, WLDS, and/or the RISDS to serve the eastern region of the Sound. In addition, and as informed by the USACE's DMMP, EPA considered beneficial use options and other non-open-water options such as confined disposal cells (CDFs) or facilities (CDFs).

EPA's cumulative impact assessment is based on over 40 years of monitoring data on chemistry, toxicity, bioaccumulation, benthic health, and bathymetry to assess physical and biological changes at the NLDS and CSDS sites. It also was based on an evaluation of the potential effects of designating the ELDS, NBDS, CSDS, or other site alternatives. Given that EPA has not found significant adverse effects from past disposal at the NLDS or CSDS, and does not anticipate significant adverse effects from the future placement of suitable material at the ELDS, it is not surprising that EPA did not find significant adverse cumulative impacts from the proposed action. EPA also considered issues such as the cumulative effect on bottom depths that would result from future disposal at the proposed disposal sites.

EPA and the USACE will continue to manage and monitor all Long Island Sound disposal sites and will request input from the state agencies if there is evidence of any adverse impacts. If necessary, EPA and the USACE will modify the SMMPs for any site at which impacts have been identified, and would do so in consultation the states of New York and Connecticut and other interested parties, as appropriate.

With respect to addressing comments received on various draft reports and documents during the development of the DSEIS, EPA did take all comments into consideration and in some cases modified those documents accordingly. In other cases, EPA may have decided that modifications were not warranted based on the comments submitted. EPA solicited input throughout the development of the DSEIS through a ''cooperating agency workgroup,'' of which NYSDOS and NYSDEC were regular participants, and from the public through an extensive public involvement program. Agency and public input received during the three-and-a-half-year process was reflected in the DSEIS text or in the appendices or both. Regarding the idea of ''capping'' disposal mounds at the NLDS with new, clean dredged material, as discussed in Response #7 above, EPA does not see any reason to pursue this approach. Extensive long-term monitoring of the NLDS and surveys conducted in 2013 for the DSEIS have documented a healthy benthic community at the site, with no toxicity in the sediment.

Comment #8. Some of the commenters who support the Proposed Rule believe that the site use restrictions accompanying the site designation that establish, among other things, standards and procedures for identifying and utilizing alternatives to open-water disposal, will help achieve the goal of reducing or eliminating open-water disposal of dredged material wherever practicable. These commenters support the goal of reducing open-water placement of dredged material in the waters of Long Island Sound, but believe that it is not feasible or practicable at this time to handle all dredged material at upland locations or at already designated dredged material disposal sites. Some of those opposing the designation recommended upland placement and beneficial use of dredged material, rather than disposing of it at open-water sites. One commenter suggested ''warehousing'' material for future use in response to sea level rise,

another suggested consideration of on-barge dewatering as a tool to facilitate upland placement of dredged materials, and another commenter suggested the alternative of the creation of islands near their sources.

Joint comments from NYSDOS and NYSDEC expressed commitment to ''working with all partners to secure a path forward for achievable, measurable reductions in open water disposal over time . . . ,'' and noted that the state had demonstrated this commitment by NYSDOS's recent concurrence with EPA's amended Final Rule designating the Central and Western Long Island Sound Disposal Sites, ''which includes updated policies and procedures intended to help meet this goal, and is subject to the additional restrictions agreed to by all Agencies involved.'' The state departments' letter further pointed out that the ''[t]he proposed rule for eastern LIS contains the same restrictions as those contained within the Final Rule for CLDS and WLDS, with the same ultimate goal of the reduction in open water disposal over time.''

Response #8. EPA agrees with the comment that the standards and procedures in the Final Rule will support the goal of eliminating or reducing open-water disposal. EPA also agrees that relying solely on upland management alternatives for all dredged material from the eastern region of the Sound is not feasible at this time. Such alternatives will, however, likely be feasible for some of that material. For example, sandy material is commonly used for beach and nearshore bar nourishment at the present time and the standards in the Final Rule expect that sandy material will continue to be used beneficially. In addition, it would be impracticable to rely on distant open-water sites outside the eastern region of the Sound, or on contained in-water disposal, for all dredged material from the eastern Sound. *See* 40 CFR 227.15 and 227.16(b).

Ultimately, decisions about how particular dredged material will be managed will be made in individual project-specific reviews under the MPRSA and/or the CWA, with additional overview and coordination provided by the Long Island Sound Steering Committee and Regional Dredging Team (RDT), as described in the site use restrictions. The Steering Committee and RDT have a number of important roles specified in the site use for the ELDS, including the identification and piloting of beneficial use alternatives, identifying possible resources to support those alternatives, and eliminating regulatory barriers, as appropriate. EPA expects that the Steering Committee and RDT will, generally and on a project specific basis, facilitate the process of matching projects, beneficial use alternatives and the resources necessary to implement them. The process of continually seeking new alternative uses for dredged material will provide the opportunity to evaluate approaches not yet fully developed, such as the ''warehousing'' suggestion. EPA views on-barge dewatering as a technique that, while expensive, has promise and should be explored and further evaluated by the Steering Committee and RDT. Ultimately, it could be become a useful technique for dewatering dredged material to prepare it for management using methods other than open-water disposal. Managing dredged material by using it to create islands was evaluated in the DMMP. The concept of creating islands in waters of the United States raises numerous issues (*e.g.,* environmental, water quality, regulatory) and any proposal of this type would need to go through a very involved regulatory process and would have to meet all legal requirements. This is something the Steering Committee and the RDT can consider in the future if a proposal is developed.

EPA agrees with the NY departments that the new site use restrictions, agreed upon by the interested state and federal agencies and inserted into the CLDS/WLDS regulations, include standards and procedures to secure a path forward for achievable, measurable reductions in open-water disposal over time. EPA also agrees that these same restrictions are now also being applied to the ELDS. In EPA's view, it makes sense to treat all regions of Long Island Sound the same in this regard.

Comment #9. EPA received a number of comments concerning potential impacts on aquatic species including fish, lobsters and oysters. Some expressed concern that the DSEIS: (1) Incorrectly portrays eastern Long Island Sound as ''a barren desert with barely any fish or shellfish species,'' based in part on what they characterized as an inadequate data collection effort; (2) ''glosses over'' the fact that parts of the area are federally-designated Essential Fish Habitat (EFH); and (3) minimizes the potential impacts of dredged material disposal on ''struggling lobster populations.'' Another commenter noted that the NLDS is adjacent to Fisher's Island, NY, where oyster harvesting has been a way of life for centuries, and the threat to water quality posed by an expansion of open-water dumping at this site translates directly to a loss of important seafood jobs.

Response #9. With respect to comments about EPA's mischaracterization of eastern Long Island Sound in terms of biological productivity, there was extensive documentation in the DSEIS and its supporting technical reports supporting the conclusion that, while this region is generally a highly productive and diverse ecosystem, the area in which the ELDS is sited is less so. Compared with some of the hard-bottom, bedrock and boulder areas in other parts of the region, the seafloor in the ELDS is relatively flat and sandy, without the sort of structure that typically supports a large diversity of fish or shellfish. At the same time, EPA has excluded two areas from the ELDS that *do* include the type of hard-bottom, bedrock and boulder conditions that tend to provide relatively better marine habitat. As for concerns about the data on fishing activity, EPA made an extensive effort to encourage as many fisherman as possible to respond to the survey in order to provide information that was as accurate as possible for analysis. The survey was made available for 37 days and, as noted in the DSEIS, it was distributed via multiple media avenues. Of 440 respondents, only 229 surveys provided sufficient information (at least five questions answered), and very few provided location-specific information as to where they fished. Of the 229 respondents, only six percent indicated they fished near dredged material disposal sites (one percent regularly and five percent occasionally). There is no shellfishing in this area, and the closest shellfish aquaculture operation is several miles west of the ELDS and closer to shore.

EPA did not gloss over the existence of EFH in the vicinity of the ELDS. As required by the Magnuson-Stevens Fisheries Conservation and Management Act, EPA coordinated with the NOAA National Marine Fisheries Service (NMFS) to determine whether its proposal to designate the ELDS would cause adverse impacts to EFH. NMFS concurred with EPA's determination that the designation of the ELDS would not adversely affect EFH. The coordination process is fully documented in the DSEIS.

EPA assessed lobster abundance in the DSEIS and found that alternative sites do not contain preferred habitat for lobsters. Prior to 1999, lobsters were very abundant throughout Long Island Sound, and particularly in the western and central regions. However since the major lobster die-off in 1999, lobsters are far less abundant through the Sound, and found primarily in the deeper waters of the central basin and The

Race. The 1999 lobster die-off prompted millions of dollars in research over the past 16 years, the results of which have led scientists and resource managers to believe that the phenomenon was caused by a combination of factors, including increased water temperatures, low dissolved oxygen levels (hypoxia), a parasitic disease (paramoeba), and possibly pesticide runoff. Researchers have not cited dredged material disposal as a possible factor in the die-off.

EPA does not agree that designating the ELDS will threaten oystering and the way-of-life of residents of Fisher's Island, NY, or cause the loss of jobs in the seafood industry. The boundaries of the ELDS have been revised so that it is farther from Fisher's Island, entirely outside of the NLDS, and entirely outside of New York State waters. EPA's evaluation of the ELDS indicates that designation of the site will not cause significant adverse effects to water quality or aquatic organisms or their habitat. As a result, the site designation will not cause lost jobs in the seafood industry. To the contrary, designation of the ELDS may assist the local seafood industry. Fishing vessels require adequate navigation channels and berthing areas, which are maintained as a result of dredging. Designation of the ELDS should facilitate needed dredging by providing an open-water disposal option for use when practicable alternative management methods are not available.

Comment #10. Some of those opposing the Proposed Rule stated that the dredged material is toxic and should not be placed in the waters of Long Island Sound, and requested remediation of such dredged material. Commenters questioned the use of older data to support the evaluation of dredged material for its suitability for open-water disposal. Some commenters noted concern with the introduction of nitrogen from dredged material into the system and requested that EPA estimate the quantity of nitrogen that would be added to the system from dredged material over the next 30 years. EPA also received comments regarding concern due to metal or organic contaminant concentrations in sediment and benthic organism tissues, elevated breast cancer rates in East Lyme, and closed shellfish harvesting areas following rainfall. Some commenters suggested that the CTDEEP Remediation Standard Regulations should be followed for disposal of dredged material in Long Island Sound.

Response #10. EPA strongly disagrees with the suggestion that toxic sediments will be disposed of at the ELDS. Neither the existing laws and regulations nor the Final Rule would allow the disposal of toxic material at the sites. Rigorous physical, chemical, and biological testing and analysis of sediments is conducted prior to any authorization to dredge. The MPRSA and EPA's ocean dumping regulations provide that sediments that do not pass these tests are considered ''unsuitable'' and shall not be disposed of at the site.

EPA believes concerns about the disposal of toxic sediments at the NLDS and other Long Island Sound disposal sites also have been addressed by the USACE's DAMOS program, which has collected data at these sites since the late 1970s. The program has generated over 200 detailed reports addressing questions and concerns related to placement of dredged material in the Sound. These reports indicate that toxic sediments are not being placed at open-water disposal sites. Moreover, sequential surveys of biological conditions at sites following the placement of dredged material consistently show a rapid recovery of the benthic community to that of the surrounding habitat outside the disposal sites. Monitoring at the NLDS has verified that past management practices have been successful in adequately controlling any potential adverse impacts to water quality and benthic habitat.

Furthermore, water and sediment quality have improved in Long Island Sound as a result of improvements in the control of point source and non-point source pollutant discharges to the Sound and its tributaries. At the same time, dredging and dredged material management are carefully controlled by federal and state agencies to optimize environmental results using tools such as ''environmental windows'' that preclude dredging when sensitive aquatic organisms in the vicinity of dredging operations would be at an increased risk of being harmed, CAD cells or CDFs that sequester unsuitable dredged material, and beneficial use projects that avoid open-water disposal of dredged material that can be better put to an alternative use (*e.g.,* using sand for beach nourishment). This management approach is reflected in the site use restrictions for ELDS that are intended to reduce or eliminate the open-water disposal of dredged material into Long Island Sound by promoting and facilitating the use of available practicable alternatives to such open-water disposal.

Potential risks associated with the bioaccumulation of chemicals from sediments at the alternative sites were evaluated by comparing contaminant concentrations in tissues of test organisms to Federal Drug Administration (FDA) Action/Tolerance Levels for an assessment of potential human health impacts and to Ecological Effect Values for an assessment of ecological impacts. Ecological Effects Values represent tissue contaminant concentrations believed to be safe for aquatic organisms, generally derived from the final chronic value of USEPA water quality criteria. The FDA Action/Tolerance Levels and Ecological Effect Values are commonly used by USEPA and USACE in the dredging program to assess risk. This evaluation considers that tissue contaminant concentrations that do not exceed FDA Action/Tolerance Levels or Ecological Effect Values do not result in a potential human health or ecological risk. There is no evidence in the current literature or other data evaluated by EPA to support a causative link between any elevated cancer rates that may exist in East Lyme and dredged material disposal in Long Island Sound.

Shellfish bed closures are typically a result of bacterial contamination from untreated or poorly treated sanitary wastewater, stormwater runoff, marine biotoxins, or elevated water temperatures. There is no evidence that shellfish harvesting in Long Island Sound, most of which is from aquaculture operations conducted in open waters off the coast, is, or will be, affected by dredged material disposal at the ELDS.

Regarding comments about older studies referenced in the DSEIS, such as those conducted in support of the 2004 EIS that supported the designation of the CLDS and WLDS, EPA used the best available literature during the development of the DSEIS. Some of this material was older and some was more recent. EPA also has included as part of the FSEIS relevant data from more recent studies (such as fisheries data) that were not available at the time the DSEIS was published. In all cases, EPA evaluated whether the data was relevant and appropriate for addressing whatever issue was at hand. While some parameters may change constantly, others remain consistent for long periods of time. Typically, older data were supplemented with newer data, or juxtaposed to newer data, to help depict trends and patterns in the study area.

As to the concern about dredged material disposal in Long Island Sound contributing to nitrogen loading in these waters, EPA notes that nitrogen loading is a concern due to its potential to help fuel excessive algae levels, which could be one potential driver of hypoxia in western Long Island Sound. In Chapter 5.2.1 of the DSEIS, however, EPA

discussed the relative insignificance of nitrogen loading from dredged material disposal. The USACE also addressed the issue in Section 3.5.2 of the DMMP. The annual placement of dredged material at the open-water sites is estimated to add less than one tenth of one percent of the overall annual nitrogen loading to Long Island Sound.

Finally, EPA disagrees with the request to follow the CTDEEP Remediation Standard Regulations (RSRs). The RSRs are not applicable to dredged material from marine waters placed at open-water disposal sites. Rather, they ''identify the technical standards for the remediation of environmental pollution at hazardous waste sites and other properties that have been subject to a spill, release or discharge of hazardous wastes or hazardous substances.'' The MPRSA and Ocean Dumping Regulations limit the potential for adverse environmental impacts associated with dredged material disposal by requiring that the dredged material from each proposed dredging project be subject to sediment testing requirements. Suitability is determined by analyzing the sediments proposed for dredging for their physical characteristics as well as for toxicity and bioaccumulation. If it is determined that the sediment is unsuitable for open-water disposal—that is, that it may unreasonably degrade or endanger human health or the marine environment—it cannot be placed at disposal sites designated under the MPRSA.

Comment #11. EPA received comments from the Shinnecock Tribal Nation noting the tribe's longstanding reliance on the waters of Long Island Sound for ''food, travel and spiritual renewal.'' The Shinnecock have high regard for these waters and, as a steward for this resource, feel a shared responsibility to protect it and to speak for other life forms that rely on it but cannot speak for themselves. The Shinnecock's comments note that work is beginning to investigate whether ''submerged paleo cultural landscapes'' exist that would indicate that the tribe's ancestors lived farther offshore than currently understood. The tribe expresses concern that dredged material placement at an open-water site could further bury any evidence of such sites. The tribe also expresses concern over how long it takes aquatic organisms to recover from open-water placement of dredged material and whether such placement at a designated site will adversely affect whales. Finally, the Shinnecock note that their concern over water pollution is related to their historic use of Long Island Sound as a travel route, which they still use for canoe journeys.

Response #11. EPA acknowledges and respects the Shinnecock Tribal Nation's stewardship, concern, and reliance upon the waters of Long Island Sound. As tasked by Congress under the CWA and MPRSA, EPA also is a steward of Long Island Sound with a mission of protecting its physical, chemical, and biological integrity, and protecting human and ecological health from harm that could result from the disposal of material into these waters. As a result, EPA believes that its goals align well with the environmental interests of the Shinnecock Tribal Nation.

With regard to the possibility that dredged material disposal might further bury submerged evidence of settlements of the Shinnecock's ancestors, EPA notes that it is currently unaware of any specific reason to believe that such submerged evidence may exist at the ELDS or the other site alternatives. In evaluating site alternatives, EPA considered the site selection criteria in EPA's regulations, which include whether ''any significant natural or cultural features of historical importance'' may exist ''at or in close proximity to'' the disposal sites. *See* 40 CFR 228.6(a)(11). EPA's consideration of this criterion dovetailed with its consultation with the State Historic Preservation Officers of both Connecticut and New York, as well as its consultation with the Shinnecock Indian Nation. In addition, EPA conducted side-scan sonar survey work to look for possible historic resources in the area of the disposal sites and none of this work identified any archaeological or historical artifacts of cultural significance. If later investigations identify the presence of submerged artifacts of cultural importance to the Shinnecock Indian Nation, EPA will consult with the tribe regarding how to respond appropriately in terms of the future use and management of the site.

As discussed in detail elsewhere in the preamble, no significant adverse effects will occur to water quality, habitat value, or marine organisms, as a result of using the ELDS as a dredged material disposal site. With regard to the concern expressed about possible impacts to whales, EPA evaluated the potential for the site designation to affect endangered species, including whales, and concluded that adverse effects to whales or their critical habitat were unlikely to result from the site designation. The National Marine Fisheries Service concurred with EPA's conclusion.

Finally, regarding the Shinnecock using the waters of Long Island Sound for canoe journeys, nothing about the designation of the ELDS should interfere with or preclude such journeys. First, the dredging (and therefore dredged material disposal) season is restricted to avoid the warmer weather months for ecological reasons, but this also ensures that dredging traffic and disposal is less likely to interfere with other boating activities that tend to be occur during warmer weather. Second, any dredged material disposal would be concentrated in one offshore area as a result of designating the ELDS. This would tend to minimize any conflicts with non-dredging-related navigation. Finally, multiple types of navigational activities (*e.g.,* recreational, commercial, military) have coexisted with dredged material disposal-related navigation for years in Long Island Sound and EPA expects that this will continue after designation of the ELDS.

Comment #12. EPA received a number of very specific and detailed comments on aspects of the studies and findings in the DSEIS and its appendices. Subjects included the physical oceanography study in Appendix C, physical energy and hydrodynamics, sediments, and tidal energy projects, among others.

Response #12. EPA's detailed responses to these comments are contained in the Response to Comments document that is included in the FSEIS as Appendix J and placed in the public docket and on the Web site identified in the **ADDRESSES** section of this document.

VII. Changes From Proposed Rule

In response to public comment, as previously described, EPA has made certain adjustments to the boundaries of the ELDS as it was proposed. These adjustments have reduced the size of the ELDS from approximately 1 x 2 nm to approximately 1 x 1.5 nm (and an area of 1.3 nmi^2), and the capacity of the site from 27 mcy to approximately 20 mcy. The specific boundary adjustments and the reasons for them have been discussed above and are further discussed below.

EPA also has decided not to designate the NBDS or CSDS. In the Proposed Rule, EPA did not propose to designate either of these two sites, but did request public comment on whether either or both ought to be designated in addition to, or instead of, the ELDS. EPA received some public comments favoring designation of the NBDS or CSDS, and other comments opposing the designation of either site. Some commenters favored designation of the ELDS, while others commented that no

designated disposal site was needed in the eastern portion of the Sound. After considering all these comments, EPA decided to designate only the ELDS. This decision was based primarily on the Agency's determination that one site is sufficient to meet the dredging needs of the eastern Long Island Sound region, and that the ELDS is the best site when evaluated in light of the site selection criteria in the Ocean Dumping Regulations. EPA also received public comments that support this decision.

The Final Rule for the ELDS, as with the Proposed Rule, incorporates by reference the site use restrictions, including the standards and procedures, contained in the final amended site designation rule for the Central and Western Long Island Sound dredged material disposal sites. These restrictions are further described in Section IX (''Restrictions'').

VIII. Compliance With Statutory and Regulatory Authorities

EPA has conducted the dredged material disposal site designation process consistent with the requirements of the MPRSA, NEPA, CZMA, the Endangered Species Act (ESA), the Magnuson-Stevens Fishery Conservation and Management Act (MSFCMA), and any other applicable legal requirements.

A. Marine Protection, Research, and Sanctuaries Act

Section 102(c) of the MPRSA, as amended, 33 U.S.C. 1412(c), *et seq.,* gives the Administrator of EPA authority to designate sites where ocean disposal of dredged material may be permitted. *See* also 33 U.S.C. 1413(b) and 40 CFR 228.4(e). Neither statute nor regulation specifically limits how long an EPA-designated disposal site may be used. Thus, EPA site designations can be for an indefinite term and are generally thought of as long-term designations. EPA may, however, place various restrictions or limits on the use of a site based on the site's capacity to accommodate dredged material or other environmental concerns. *See* 33 U.S.C. 1412(c).

Section 103(b) of the MPRSA, 33 U.S.C. 1413(b), provides that any ocean disposal of dredged material should occur at EPA-designated sites to the maximum extent feasible. In the absence of an available EPA-designated site, however, the USACE is authorized to ''select'' appropriate disposal sites. There are currently no EPA-designated dredged material disposal sites in the eastern portion of Long Island Sound. There are two active USACE-selected sites in that region, the NLDS and CSDS, but neither will be available after December 23, 2016, when their Congressionally-authorized term of use expires.

The Ocean Dumping Regulations, *see generally* 40 CFR subchapter H, prescribe general and specific criteria at 40 CFR 228.5 and 228.6, respectively, to guide EPA's choice of disposal sites for final designation. Ocean dumping sites designated on a final basis are promulgated by EPA at 40 CFR 228.15. *See* 40 CFR 228.4(e)(1). Section 102(c) of the MPRSA, 33 U.S.C. 1412(c), and 40 CFR 228.3 also establish requirements for EPA's ongoing management and monitoring, in conjunction with the USACE, of disposal sites designated by EPA. This enables EPA to ensure that unacceptable, adverse environmental impacts do not occur from the placement of dredged material at designated sites. Examples of site management and monitoring measures employed by EPA and the USACE include the following: Regulating the times, rates, and methods of disposal, as well as the quantities and types of material that may be disposed; conducting pre- and post-disposal monitoring of sites; conducting disposal site evaluation studies; and, if warranted, recommending modification of site use and/or designation conditions and restrictions. *See also* 40 CFR 228.7, 228.8, 228.9.

A disposal site designation by EPA does not actually authorize the disposal of particular dredged material at that site. It only makes the site available as a possible management option if various other conditions are met first. Disposal of dredged material at a designated site must first be authorized by the USACE under MPRSA section 103(b), subject to EPA review under MPRSA 103(c). USACE authorization can only be granted if: (1) It is determined that there is a need for open-water disposal for that project (*i.e.,* that there are no practicable alternatives to such disposal that would cause less harm to the environment); and (2) the dredged material is found suitable for open-water disposal by satisfying the applicable environmental criteria specified in EPA's regulations at 40 CFR part 227. *See* 40 CFR 227.1(b), 227.2, 227.3, 227.5, 227.6 and 227.16. An authorization for disposal also must satisfy other applicable legal requirements, such as those under the ESA, the MSFCMA, the CWA (including any applicable state water quality standards), NEPA, and the CZMA. The text below discusses EPA's evaluation of the ELDS for this Final Rule using the applicable site selection criteria from EPA's MPRSA regulations. It also discusses the Agency's compliance with site management and monitoring requirements.

EPA's evaluation considered whether there was a need to designate one or more disposal sites for long-term dredged material disposal, including an assessment of whether other dredged material management methods could reasonably be judged to obviate the need for such designations. From this evaluation, EPA concluded that one or more open-water disposal sites were needed. EPA then assessed whether sites were available that would satisfy the applicable environmental criteria to support a site designation under MPRSA section 102(c). In deciding to designate the ELDS, as specified in this Final Rule, EPA complied with all applicable procedural requirements and substantive criteria under the MPRSA and EPA regulations.

1. Procedural Requirements

MPRSA sections 102(c) and 103(b) indicate that EPA may designate ocean disposal sites for dredged material. EPA regulations at 40 CFR 228.4(e) specify that dredged material disposal sites will be ''designated by EPA promulgation in this [40 CFR] part 228 . . . .'' EPA regulations at 40 CFR 228.6(b) direct that if an EIS is prepared by EPA to assess the proposed designation of one or more disposal sites, it should include the results of an environmental evaluation of the proposed disposal site(s). In addition, the Draft SEIS (DSEIS) should be presented to the public along with a proposed rule for the proposed disposal site designation(s), and a Final SEIS (FSEIS) should be provided at the time of final rulemaking for the site designation.

EPA has complied with all procedural requirements. The Agency prepared a thorough environmental evaluation of the site proposed for designation and other alternative sites and courses of action (including the option of not designating an open-water disposal site). This evaluation was first presented in a DSEIS (and related documents) and a Proposed Rule for promulgation of the disposal sites. EPA published the Proposed Rule and a notice of availability of the DSEIS (81 FR 24748) for a 60-day public comment period on April 27, 2016, and subsequently extended the comment period by 21 days (to July 18, 2016) to give the public additional time to comment on the proposed site designation. By this Final Rule, EPA is now completing the designation of the ELDS by promulgation in 40 CFR part 228.

Finally, MPRSA sections 102(c)(3) and (4) dictate that EPA must, in

conjunction with the USACE, develop a site management plan for each dredged material disposal site it proposes to designate. MPRSA section 102(c)(3) also states that in the course of developing such management plans, EPA and the USACE must provide an opportunity for public comment. EPA and the USACE have met this obligation by publishing for public review and comment a Draft SMMP for the ELDS. The Draft SMMP was published with the DSEIS (as Appendix I) and the proposed rule on April 27, 2016. After considering public comments regarding the SMMP, EPA and the USACE are publishing the Final SMMP for the ELDS as Appendix I of the FSEIS.

2. Disposal Site Selection Criteria

EPA regulations under the MPRSA identify four general criteria and 11 specific criteria for evaluating locations for the potential designation of dredged material disposal sites. *See* 40 CFR 228.4(e), 228.5 and 228.6. EPA's evaluation of the ELDS with respect to the four general and 11 specific criteria was discussed in the DSEIS and the Proposed Rule and is further discussed in detail in the FSEIS and supporting documents and is summarized below.

a. General Criteria (40 CFR 228.5)

EPA has determined that the ELDS satisfies the four general criteria specified in 40 CFR 228.5. This is discussed in Chapter 5 and summarized in Table 5–9, ''Summary of Impacts for Action and No Action Alternatives of the FSEIS.''

i. Sites must be selected to minimize interference with other activities in the marine environment, particularly avoiding areas of existing fisheries or shellfisheries, and regions of heavy commercial or recreational navigation (40 CFR 228.5(a)).

EPA's evaluation determined that use of the ELDS—as modified in this Final Rule in response to public comments and further evaluation—would cause minimal interference with the aquatic activities identified in this criterion. The site is not located in shipping lanes or any other region of heavy commercial or recreational navigation. In addition, the site is not located in an area that is important for commercial or recreational fishing or shellfish harvesting. Analysis of this data indicated that use of the site would have minimal potential for interfering with other existing or ongoing uses of the marine environment in and around the ELDS, including lobster harvesting or fishing activities. In addition, the nearby NLDS has been used for dredged material disposal for many years; not only has this activity not significantly interfered with the uses identified in this criterion, but mariners in the area are accustomed to dealing with the presence of a dredged material disposal site. With the adjustment to the eastern boundary of the ELDS, EPA is even more confident that the site will not pose a hazard to navigation. Finally, time-of-year restrictions (also known as ''environmental windows'') imposed to protect fishery resources will typically limit dredged material disposal activities to the months of October through April, thus further minimizing any possibility of interference with the various activities specified in this criterion.

ii. Sites must be situated such that temporary perturbations to water quality or other environmental conditions during initial mixing caused by disposal operations would be reduced to normal ambient levels or to undetectable contaminant concentrations or effects before reaching any beach, shoreline, marine sanctuary, or known geographically limited fishery or shellfishery (40 CFR 228.5(b)).

EPA's analysis concludes that the ELDS, as adjusted for this Final Rule, satisfies this criterion. First, the site is a significant distance from any beach, shoreline, marine sanctuary (in fact, there are no federally-designated marine sanctuaries in Long Island Sound), or known geographically limited fishery or shellfishery. Second, the site will be used only for the disposal of dredged material determined to be suitable for open-water disposal by application of the MPRSA's ocean dumping criteria. *See* 40 CFR part 227. These criteria include provisions related to water quality and account for initial mixing. *See* 40 CFR 227.4, 227.5(d), 227.6(b) and (c), 227.13(c), 227.27, and 227.29. Data evaluated during development of the FSEIS, including data from monitoring conducted during and after past disposal activities, indicates that any temporary perturbations in water quality or other environmental conditions at the site during initial mixing from disposal operations will be limited to the immediate area of the site and will neither cause any significant environmental degradation at the site nor reach any beach, shoreline, marine sanctuary, or other important natural resource area.

iii. The sizes of disposal sites will be limited in order to localize for identification and control any immediate adverse impacts, and to permit the implementation of effective monitoring and surveillance to prevent adverse long-range impacts. Size, configuration, and location are to be determined as part of the disposal site evaluation (40 CFR 228.5(d)).

EPA has determined, based on the information presented in the FSEIS, that the ELDS, in its final configuration, is sufficiently limited in size to allow for the identification and control of any immediate adverse impacts, and to permit the implementation of effective monitoring and surveillance to prevent adverse long-term or cumulative impacts. To put things in perspective, the size of the ELDS is approximately 1.3 nmi^2, which is just 0.003 (0.03 percent) of the approximately 370 nmi^2 surface area of the eastern Long Island Sound region, and just 0.001 (less than one-tenth of one-percent) of the approximately 1300 nmi^2 surface area of the entire Long Island Sound. The designation of just this one site reduces the overall number of active disposal sites in Long Island Sound from four to three. The long history of dredged material disposal site monitoring in New England through the USACE's Disposal Area Monitoring System (DAMOS), and specifically at active and historic dredged material disposal sites in Long Island Sound, provides ample evidence that these surveillance and monitoring programs are effective at determining physical, chemical, and biological impacts at dredged material disposal sites such as the ELDS.

The boundaries of the ELDS are identified by specific coordinates provided in Table 5–11 of the FSEIS, and the use of precision navigation equipment in both dredged material disposal operations and monitoring efforts will enable accurate disposal operations to be conducted, and also will contribute to effective management and monitoring of the sites. Detailed plans for the management and monitoring of the ELDS are described in the SMMP (Appendix I of the FSEIS). Finally, as discussed herein and in the FSEIS, EPA has tailored the boundaries of the ELDS, and site management protocols, in light of site characteristics such as local currents and bottom features, so that the area and boundaries of the sites are optimized for environmentally sound dredged material disposal operations.

iv. EPA will, wherever feasible, designate ocean dumping sites beyond the edge of the continental shelf and other such sites that have been historically used (40 CFR 228.5(e)).

EPA evaluated sites beyond the edge of the continental shelf and historical disposal sites in Long Island Sound as part of the alternatives analysis conducted for the FSEIS. The continental shelf extends about 60 nmi seaward from Montauk Point, New

York, and a site located on the continental slope would result in a transit of approximately 80 nmi from New London. This evaluation determined that the long distances and travel times between the dredging locations in eastern Long Island Sound and the continental shelf posed significant environmental, operational, safety, and financial concerns, rendering such options unreasonable and not practicable. Environmental concerns include increased risk of encountering endangered species during transit, increased fuel consumption and air emissions, and greater potential for accidents in transit that could lead to dredged material being dumped in unintended areas.

As described in Section V (''Disposal Site Description''), while the ELDS, as modified, does not include any areas that have been used historically for dredged material disposal, its eastern boundary is the western boundary of the historically used NLDS. Thus, the modified site is in the general vicinity of the historically used NLDS. To the extent that the ELDS boundaries have been adjusted from those described in the Proposed Rule to include only adjacent areas outside of the existing site, EPA has concluded that these adjustments will be environmentally beneficial, as discussed in the FSEIS. For example, rather than propose designation of part of the existing NLDS, the eastern half of which is at capacity and nearing depths that could lead to scouring of the sediment by surface currents and storms, EPA's final designation of ELDS encompasses two areas (formerly NL–Wb and NL–Wa) immediately to the west of the NLDS. Moving the site to the west is consistent with public comments urging that the originally proposed ELDS be moved to the west, farther from the New London Harbor approach lane and submarine transit corridor in that area of the Sound. It is also consistent with public comments that favored sites that were further from New York state waters. These two adjacent areas have been determined to be suitable for use as containment areas by physical oceanographic modeling. Long-term monitoring of the adjacent NLDS has shown minimal adverse impacts to the marine environment and rapid recovery of the benthic community in the disposal mounds. Similarly, adverse impacts are not expected to result from use of the new ELDS. While there are other historically used disposal sites in eastern Long Island Sound, the analysis in the FSEIS and summarized herein concludes that the ELDS is the preferable location. Thus, designation of the ELDS would be consistent with this criterion.

b. Specific Criteria (40 CFR 228.6)

In addition to the four general criteria discussed above, 40 CFR 228.6(a) lists eleven specific factors to be used in evaluating the impact of using a site for dredged material disposal under the MPRSA. Compliance with the eleven specific criteria is discussed below. It is also discussed in detail in Chapter 5 and summarized in Table 5–13, ''Summary of Impacts at the Alternative Sites,'' of the FSEIS.

i. Geographical Position, Depth of Water, Bottom Topography and Distance From Coast (40 CFR 228.6(a)(1)).

Water depths at the ELDS range from approximately 59 feet (18 m) in the north to 100 feet (30 m) in the south. As described above, the closest points of land to the site are Harkness Memorial State Park in Waterford, Connecticut, approximately 1.1 nmi to the north, and Fishers Island, New York, approximately 2.3 nmi to the east. Based on analyses in the FSEIS, EPA has concluded that the ELDS's geographical position (*i.e.,* location), water depth, and bottom topography (*i.e.,* bathymetry), along with the absence of strong bottom currents at the site, will result in containment of dredged material within site boundaries. As described in Section V (''Disposal Site Description''), and in the above discussion of compliance with general criteria iii and iv (40 CFR 228.5(c) and (d)), the ELDS also is located far enough from shore and lies in deep enough water to avoid adverse impacts to the coastline.

Because the ELDS is a containment area, dredged material placed there is expected to remain within the site and not affect adjacent seafloor areas. Long-term monitoring of the NLDS and other disposal sites in Long Island Sound supports that determination. Any short-term impacts during dredged material placement, such as burial of benthic organisms or temporarily increasing the turbidity in the water column within the disposal site, will be localized at the site. As explained farther below in this analysis and in the FSEIS, although dredged material disposal will cause these localized, short-term effects, these effects are not expected to result in significant short-term or long-term adverse impacts to the environment.

ii. Location in Relation To Breeding, Spawning, Nursery, Feeding, or Passage Areas of Living Resources in Adult or Juvenile Phases (40 CFR 228.6(a)(2)).

EPA considered the ELDS, as modified for this Final Rule, in relation to breeding, spawning, nursery, feeding, and passage areas for adult and juvenile phases (*i.e.,* life stages) of living resources in Long Island Sound. From this analysis, EPA concluded that, while disposal of suitable dredged material at the ELDS would cause some short-term, localized effects, overall it would not cause adverse effects to the habitat functions and living resources specified in the above criterion.

The ELDS does not encompass or infringe upon any breeding, spawning, nursery, feeding or passage area of particular or heightened importance for juvenile or adult living resources. That said, EPA has noted that in the north-central area of the ELDS as delineated in the Proposed Rule, there is a hard-bottom area with rocky outcroppings that appears likely to constitute high quality habitat for fish and other aquatic organisms, and there is a similar hard bottom area in the extreme southwestern corner of the ELDS. As a result, EPA has redrawn the northern and southern boundaries of the ELDS to avoid these particular areas.

Generally, there are three primary ways that dredged material disposal could potentially adversely affect marine resources. First, disposal can cause physical impacts by injuring or burying less mobile fish, shellfish, and benthic organisms, as well as their eggs and larvae. Second, tug and barge traffic transporting the dredged material to a disposal site could possibly collide or otherwise interfere with marine mammals and reptiles. Third, if contaminants in the dredged material are taken in by aquatic organisms, these contaminants could potentially bioaccumulate through the food chain. However, EPA and the other federal and state agencies that regulate dredging and dredged material disposal impose requirements that prevent or greatly limit the potential for these types of impacts to occur.

For example, the agencies impose ''environmental windows,'' or time-of-year restrictions, for both dredging and dredged material disposal. This type of restriction has been a standard practice for more than a decade in Long Island Sound, and New England generally, and is incorporated in USACE permits and authorizations in response to consultation with federal and state natural resource agencies (*e.g.,* the National Marine Fisheries Service (NMFS)). Dredging, and corresponding dredged material disposal in Long Island Sound, is generally limited to the period between October 1 and April 30 to avoid time periods of possibly

heightened threat to aquatic organisms. Indeed, environmental windows are often set depending on the location of specific dredging projects in relation to certain fish and shellfish species. For example, dredging in nearshore areas where winter flounder spawning occurs is generally prohibited between February 1 and April 1; dredging that may interfere with anadromous fish runs is generally prohibited between April 1 and May 15; and dredging that may adversely affect shellfish is prohibited between June 1 and September 30. These environmental windows limiting when dredging can occur also, in effect, restrict periods when dredged material disposal could occur.

Another benefit of using environmental windows is that they reduce the likelihood of dredged material disposal activities interfering with marine mammals and reptiles. There are several species of marine mammal or reptile, such as harbor porpoises, long-finned pilot whales, seals, and sea turtles that either inhabit or migrate through Long Island Sound. During the winter months, however, most of these species either leave the Sound for warmer waters to the south or are less active and remain near the shore. There also are many species of fish (*e.g.,* striped bass, bluefish, and scup) and invertebrates (*e.g.,* squid) that leave the Sound during the winter for either deeper water or warmer waters to the south, thus avoiding the time of year when most dredging and dredged material disposal occurs. The use of environmental windows has been refined over time and is considered an effective management tool to minimize impacts to marine resources.

Dredged material disposal will, however, have some short-term, localized impacts to fish, shellfish, and benthic organisms, such as clams and worms, that are present at a disposal site (or in the water column directly above the site) during a disposal event. The sediment plume may entrain and smother some fish in the water column, and may bury some fish, shellfish, and other marine organisms on the sea floor. It also may result in a short-term loss of forage habitat in the immediate disposal area, but the DAMOS program has documented the recolonization of disposal mounds by benthic infauna within 1–3 years after disposal, and this pattern would be expected at the sites evaluated in the FSEIS. As discussed in the FSEIS (section 5.2.2), over time, disposal mounds recover and develop abundant and diverse biological communities that are healthy and able to support species typically found in the ambient surroundings. Some organisms may burrow deeply into sediments, often up to 20 inches, and are more likely to survive a burial event.

The MPRSA regulations further limit the potential for adverse environmental impacts associated with dredged material disposal by requiring that the dredged material from each proposed dredging project be subject to the MPRSA sediment testing requirements, set forth at 40 CFR 227.6, to determine the material's suitability for open-water disposal. Such suitability is determined by analyzing the sediments proposed for dredging for their physical characteristics as well as for toxicity and bioaccumulation. In addition, the regulatory agencies quantify the risk to human health that would result from consuming marine organisms exposed to the dredged material and its associated contaminants using a risk assessment model. If it is determined that the sediment is unsuitable for open-water disposal—that is, that it may unreasonably degrade or endanger human health or the marine environment—it cannot be placed at disposal sites designated under the MPRSA. *See* 40 CFR 227.6. In light of these strict controls, EPA does not anticipate significant effects on marine organisms from dredged material disposal at the sites under evaluation.

EPA recognizes that dredged material disposal causes some short-term, localized adverse effects to marine organisms in the immediate vicinity of each disposal event. Dredged material disposal would be limited, however, to suitable material at the one site (see above regarding compliance with general criteria (40 CFR 228.5(e)), and only during the several colder-weather months of the year. As a result, EPA concludes that designating the ELDS would not cause significant, unacceptable or unreasonable adverse impacts to breeding, spawning, nursery, feeding, or passage areas of living resources in adult or juvenile phases. Moreover, there is no evidence that designating the ELDS would have significant long-term effects on benthic processes or habitat conditions.

iii. Location in Relation to Beaches and Other Amenity Areas (40 CFR 228.6(a)(3)).

EPA's analysis concludes that the ELDS satisfies this criterion. The ELDS is far enough away from beaches, parks, wildlife refuges, and other areas of special concern to prevent adverse impacts to these amenities. Also, as previously noted, there are no marine sanctuaries in Long Island Sound. The ELDS is approximately 2.3 nmi from the closest public beach in New York, on the western shore of Fishers Island, and approximately 1.1 nmi from the beach at Harkness Memorial State Park in Waterford, Connecticut. Given that the ELDS is a containment site, no material placed at the site would be expected to move from the site to these amenity areas. As noted above, any temporary perturbations in water quality or other environmental conditions at the site during initial mixing from disposal operations will be limited to the immediate area of the site and will not reach any beach, parks, wildlife refuges, or other areas of special concern.

iv. Types and Quantities of Wastes Proposed To Be Disposed of, and Proposed Methods of Release, Including Methods of Packing the Waste, if Any (40 CFR 228.6(a)(4)).

The ELDS is being designated to receive only suitable dredged material; disposal of other types of material will not be allowed. The MPRSA and EPA regulations expressly prohibit open water disposal of certain other types of material (*e.g.,* industrial waste, sewage sludge, chemical warfare agents, and insufficiently characterized materials) (33 U.S.C. 1414b; 40 CFR 227.5).

The typical composition of dredged material to be disposed at the sites is expected to range from predominantly ''clay-silt'' to ''mostly sand.'' This expectation is based on historical data from dredging projects in the eastern region of Long Island Sound. For federal dredging projects and private projects generating more 25,000 cubic yards of dredged material, EPA and the USACE will conduct sediment suitability determinations applying the criteria for testing and evaluating dredged material under 40 CFR part 227, and further guidance in the ''Regional Implementation Manual for the Evaluation of Dredged Material Proposed for Disposal in New England Waters'' (EPA, 2004). Dredged material must satisfy these suitability criteria before it can be authorized for disposal under the MPRSA. In accordance with MPRSA § 106(f), private dredging projects generating up to 25,000 cubic yards will continue to be regulated under CWA section 404.

Dredged material to be placed at the ELDS would be transported by either government or private contractor hopper dredges or oceangoing bottom-dump barges (''scows'') towed by a towing vessel (*e.g.,* tugboat). Both types of equipment release the material at or very near the surface, which is the standard operating procedure for this activity. The disposal of this material will occur at specific coordinates marked by buoys, and will be placed so as to concentrate material from each

disposal project. This concentrated placement is expected to help minimize bottom impacts to benthic organisms. In addition, there are no plans to pack or package dredged material prior to disposal.

As previously discussed, the USACE's DMMP projected that dredging in eastern Long Island Sound will generate approximately 22.6 million cubic yards (mcy) of dredged material over the next 30 years, including 17.9 mcy from Connecticut ports and harbors and 4.7 mcy from ports and harbors in New York. Of the total amount of 22.6 mcy, approximately 13.5 mcy are projected to be fine-grained sediment that meets MPRSA and CWA standards for aquatic disposal (*i.e.,* ''suitable'' material), and 9.1 mcy are projected to be course-grained sand that also meets MPRSA and CWA standards for aquatic disposal (*i.e.,* also ''suitable'' material).

As discussed above in Section VI (''Summary of Public Comments and EPA's Responses''), EPA asked the USACE to conduct another analysis to further refine the actual disposal capacity needed as compared with the original dredging needs estimate, taking into consideration EPA's designation of only one site, past dredging experience, and other factors, such as the potential for future improvement dredging projects and extreme storm events, and accounting for consolidation of dredged material in the disposal site. The USACE's disposal capacity analysis determined that the necessary capacity was approximately 20 mcy, which will be just met by the capacity of the ELDS. For all of these reasons, no significant adverse impacts are expected to be associated with the types and quantities of dredged material that may be disposed at the sites.

v. Feasibility of Surveillance and Monitoring (40 CFR 228.6(a)(5)).

Monitoring and surveillance will be feasible at the ELDS. The site is conducive to monitoring because it is a containment site and material placed at the site is expected to stay there. The ELDS is readily accessible for sediment grab, bathymetric, and side-scan sonar surveys. The nearby NLDS has been successfully monitored by the USACE over the past 35 years under the DAMOS program. Monitoring of the ELDS would be carried out under the DAMOS program in accordance with the current approved Site Management and Monitoring Plan (SMMP) for the site. In conjunction with the Proposed Rule, EPA and the USACE developed a draft SMMP and published it for public review and comment. The agencies have now developed a final SMMP in connection with this Final Rule. The final SMMP for the ELDS is included as Appendix I of the FSEIS.

The SMMP is subject to review and updating at least once every ten years, if necessary, and may be subject to additional revisions based on the results of site monitoring and other new information. Any such revisions will be closely coordinated with other federal and state resource management agencies and stakeholders during the review and approval process and will become final only when approved by EPA, in conjunction with the USACE. *See* 33 U.S.C. 1413 (c)(3).

vi. Dispersal, Horizontal Transport and Vertical Mixing Characteristics of the Area, Including Prevailing Current Direction and Velocity, if Any (40 CFR 228.6(a)(6)).

Although the interactions of bathymetry, wind-generated waves, and river and ocean currents in Long Island Sound are complex, EPA has conducted a rigorous assessment of bottom stress, hydrodynamic processes, and storm-driven wave action at the ELDS. The assessment included data collection and modeling of disposal of dredged material under a variety of conditions. The assessment concluded that the area that encompasses both the ELDS and NLDS has the least amount of bottom stress compared with the other sites in the eastern Long Island Sound region that were assessed. This supports EPA's conclusion that the ELDS provides for the greatest stability of disposal mounds and is the optimal location for a containment site. See *e.g.,* 40 CFR 228.15(b)(4)(vi)(L)). Consistent with this, past monitoring during disposal operations at the NLDS (in the vicinity of the ELDS) revealed minimal drift of sediment out of the disposal site area as it passed through the water column. EPA expects the same result at the ELDS.

Disposal site monitoring has confirmed that peak wave-induced bottom current velocities are not sufficient to cause significant erosion of dredged material placed at the ELDS. As noted above, physical oceanographic monitoring and modeling has indicated that the ELDS is a depositional location that collects, rather than disperses, sediment. As a result, EPA has determined that the dispersal, horizontal transport, and vertical mixing characteristics, as well as the current velocities and directions at the ELDS, all support designating it as a long-term dredged material disposal site.

vii. Existence and Effects of Current and Previous Discharges and Dumping in the Area (Including Cumulative Effects) (40 CFR 228.6(a)(7)).

As previously described in Section V (''Disposal Site Description''), the ELDS is west of, and adjacent to, the NLDS, which has received approximately 8.9 mcy (6.7 million m^3) of dredged material since 1955. The NLDS was used regularly until the early 2000s and is still an active site, but it has not been used frequently in recent years and it will no longer be available for use after December 23, 2016.

Until the passage of the CWA in 1972, dredged material disposal was not a heavily regulated activity. Since 1972, open-water disposal in Long Island Sound has been subject to the sediment testing and alternatives analysis provisions of section 404 of the CWA. With passage of the Ambro Amendment in 1980 (which was further amended in 1990), 33 U.S.C. 1416(f), dredged material disposal from all federal projects and non-federal projects generating more than 25,000 cubic yards of material became subject to the requirements of the MPRSA in addition to CWA section 404. These increasingly stringent regulatory requirements for dredged material disposal, combined with other CWA requirements that have reduced the level of pollutants being discharged into the Nation's waterways, have contributed to a steady, measurable improvement in the quality of material that has been allowed to be placed at the NLDS over the past 40 years.

The NLDS has been used since the early 1980s pursuant to the USACE's short-term site selection authority under section 103(b) of the MPRSA (33 U.S.C. 1413(b)). In EPA's view, the close proximity of the NLDS to the ELDS, coupled with past use of the NLDS, generally makes the ELDS preferable for designation, as compared to more pristine sites that have either not been used or were used in the more distant past. *See* 40 CFR 228.5(e). Using a site in the vicinity of an existing site, rather than using sites in areas completely unaffected by dredged material in the past, will help to concentrate, rather than spread, the footprint of dredged material disposal on the seafloor of Long Island Sound.

While the effects of placing suitable dredged material at a disposal site are primarily limited to short-term physical effects, such as burying benthic organisms in the location where the material is placed, EPA regards it to be preferable to concentrate such effects in particular areas and leave other areas untouched as much as possible.

That said, EPA's evaluation of data and modeling results indicates that past disposal operations at the NLDS have not resulted in unacceptable or

unreasonable environmental degradation, and that there should be no such adverse effects in the future from the projected use of the ELDS. As part of this conclusion, discussed in detail in Section 5.7 of the FSEIS, EPA found that there should be no significant adverse cumulative environmental effects from using the ELDS on a long-term basis for dredged material disposal in compliance with all applicable regulatory requirements regarding sediment quality and site usage.

viii. Interference With Shipping, Fishing, Recreation, Mineral Extraction, Desalination, Fish and Shellfish Culture, Areas of Special Scientific Importance and Other Legitimate Uses of the Ocean (40 CFR 228.6(a)(8)).

In evaluating whether disposal activity at the site could interfere with any of the uses described above, EPA considered both the effects of placing dredged material on the bottom of the Sound at the ELDS and any effects from vessel traffic associated with transporting the dredged material to the disposal site. From this evaluation, EPA concluded there would be no unacceptable or unreasonable adverse effects on the considerations noted in this criterion. Some of the factors listed in this criterion have already been discussed above due to the overlap of this criterion with aspects of certain other criteria. Nevertheless, EPA will address each point below.

As previously discussed, and in response to public comment, the eastern boundary of the ELDS has been shifted westward to move it further from the submarine transit corridor into the Thames River. The eastern boundary of the ELDS is 0.467 nmi west of the western boundary of the New London Harbor approach lane and submarine transit corridor, which will further reduce any potential for conflicts between use of the disposal site and submarine and deep draft commercial marine traffic. Vessel traffic generated by disposal activity is expected to be similar to that which has occurred over the past 20–30 years, which has not interfered with other shipping activity. Moreover, research by EPA and the USACE concluded that after disposal at the ELDS, resulting water depths will be sufficient to permit navigation in the area without interference. By providing an open-water alternative for dredged material disposal in the absence of environmentally preferable, practicable alternatives, the sites are likely to improve and facilitate navigation in many of the harbors, bays, rivers and channels around eastern Long Island Sound.

EPA also carefully evaluated the potential effects on commercial and recreational fishing for both finfish and shellfish (including lobster) of designating the ELDS for dredged material disposal, and concluded that there would be no unreasonable or unacceptable adverse effects. As discussed above in relation to other site evaluation criteria, dredged material disposal will have only short-term, incidental, and insignificant effects on organisms in the disposal sites and no appreciable effects beyond the sites. Indeed, since past dredged material disposal, including at the nearby NLDS, has been determined to have no significant adverse effects on fishing, the similar projected levels of future disposal activities at the designated site also are not expected to have any significant adverse effects.

There are four main reasons that EPA concluded that no unacceptable adverse effects would occur from placing dredged material at the ELDS. First, as discussed above, any contaminants in material permitted for disposal—having satisfied the dredged material criteria in the regulations that restrict any toxicity and bioaccumulation—will not have any significant adverse effects on fish, shellfish, or other aquatic organisms. Moreover, because the ELDS is a containment area, dredged material disposed at the site is expected to remain there.

Second, as also discussed above, the disposal site does not encompass any especially important, sensitive, or limited habitat for the Sound's fish and shellfish, such as key spawning or nursery habitat for species of finfish. That said, as explained farther above, EPA has redrawn the boundary of the ELDS to avoid a rocky area that could provide particularly good habitat for fish, even though it is not an area that has received any special designation for such purposes.

Third, while EPA found that a small number of demersal fish (*e.g.,* winter flounder), shellfish (*e.g.,* clams and lobsters), benthic organisms (*e.g.,* worms), and zooplankton and phytoplankton could be lost due to the physical effects of disposal (*e.g.,* burial of organisms on the seafloor by dredged material and entrainment of plankton in the water column by dredged material upon its release from a disposal barge), EPA also determined that these minor, temporary adverse effects would be neither unreasonable nor unacceptable. This determination was based on EPA's conclusion that the numbers of organisms potentially affected represent only a minuscule percentage of those in eastern Long Island Sound, and on DAMOS monitoring that consistently documents the rapid recovery of the benthic community in an area that has received dredged material. In addition, any physical effects will be further limited by the relatively few months in which disposal activities could be permitted by the environmental window (or time-of-year) restrictions.

Fourth, EPA has determined that vessel traffic associated with dredged material disposal will not have any unreasonable or unacceptable adverse effects on fishing. As explained above, environmental window restrictions will limit any disposal to the period between October 1 and April 30, and often to fewer months depending on species-specific restrictions for each dredging project, each year. Moreover, due to the seasonal nature of recreational boating and commercial shipping, there is generally far less vessel traffic in the colder-weather months when disposal would occur.

There currently are no mineral extraction activities or desalinization facilities in the eastern Long Island Sound region with which disposal activity could potentially interfere. Energy transmission pipelines and cables are located near the site, but none are within the boundaries of the ELDS.

No finfish aquaculture currently takes place in Long Island Sound, and the only form of shellfish culture in the area, oyster production, occurs in nearshore locations far enough away from the ELDS that it should not be impacted in any manner by this proposed action.

Finally, the ELDS is not in an area of special scientific importance; in fact, areas with such characteristics were screened out very early in the alternatives screening process. Accordingly, depositing dredged material at the ELDS will not interfere with any of the activities described in this criterion or other legitimate uses of Long Island Sound.

ix. The Existing Water Quality and Ecology of the Sites as Determined by Available Data or by Trend Assessment or Baseline Surveys (40 CFR 228.6(a)(9)).

EPA's analysis of existing water quality and ecological conditions at the ELDS in light of available data, trend assessments and baseline surveys indicates that disposal at the site will not cause unacceptable or unreasonable adverse environmental effects. Considerations related to water quality and various ecological factors (*e.g.,* sediment quality, benthic organisms, fish and shellfish) have already been discussed above in relation to other site selection criteria, and are discussed in

detail in the FSEIS and supporting documents. In considering this criterion, EPA took into account existing water quality and sediment quality data collected at the disposal sites, including from the USACE's DAMOS site monitoring program, as well as water quality data from the Connecticut Department of Energy and Environmental Protection's (CTDEEP) Long Island Sound Water Quality Monitoring Program. As discussed herein, EPA has determined that placement of suitable dredged material at the ELDS should not cause any significant adverse environmental effects to water quality or to ecological conditions at the disposal sites. EPA and the USACE have prepared a SMMP for the ELDS to guide future monitoring of site conditions (FSEIS Appendix I).

x. Potentiality for the Development or Recruitment of Nuisance Species in the Disposal Sites (40 CFR 228.6(a)(10)).

Monitoring at disposal sites in Long Island Sound over the past 35 years has shown no recruitment of nuisance (invasive, non-native) species that are attributable to dredged material disposal. There is no reason to expect this to change, but monitoring will continue to look for any such impacts. EPA and the USACE will continue to monitor the ELDS and other EPA-designated sites under their respective SMMPs, which include a ''management focus'' on ''changes in composition and numbers of pelagic, demersal, or benthic biota at or near the disposal sites'' (Section 6.1.5 of the SMMP, Appendix I of the FSEIS).

xi. Existence at or in Close Proximity to the Sites of Any Significant Natural or Cultural Feature of Historical Importance (40 CFR 228.6(a)(11)).

There are no natural or cultural features of historical importance located within or in close proximity to the ELDS. There is, however, one shipwreck located within the ELDS near the southeastern corner the site, just inside its eastern boundary. As discussed in the FSEIS, a review of submerged vessel reports in the NOAA and Connecticut State Historic Preservation Office (CT SHPO) shipwreck databases indicates that there is one charted shipwreck located within the ELDS, near its eastern boundary. This wreck also was identified by EPA's side-scan sonar survey. This shipwreck is not, however, considered to be of historical importance.

EPA coordinated with Indian tribes in Connecticut, Rhode Island, and New York throughout the development of the FSEIS, and the tribes did not identify any important natural, cultural, spiritual, or historical features or areas within the ELDS. At the same time, the Shinnecock Indian Nation commented to EPA that investigations are underway to determine whether ''submerged paleo cultural landscapes'' might exist that would indicate that the tribe's ancestors lived farther offshore than currently understood. In this regard, the tribe expresses concern that dredged material placement at an open-water site could further bury any evidence of such sites. As discussed above and in the FSEIS, EPA is currently not aware of any evidence suggesting that such submerged artifacts may exist at the ELDS. If such evidence emerges in the future, EPA will further consult with the Shinnecock Indian Nation about whether any adjustments to the site boundaries, site management requirements, or site use restrictions would be appropriate.

In summary, one shipwreck is located just inside the eastern boundary of the ELDS, but the wreck is not considered to be of historical significance. Nevertheless, any impacts to that wreck from dredged material disposal will be minimized by establishing a 164-foot (50 m) avoidance buffer surrounding the shipwreck as well as appropriate site management, which accommodates both the minimum buffer of 30 m recommended by the CT SHPO, and the 40–50 m minimum buffer applied by the NY OPRHP.

3. Disposal Site Management (40 CFR 228.3, 228.7, 228.8 and 228.9)

The ELDS will be subject to specific management requirements to ensure that unacceptable adverse environmental impacts do not occur. Examples of these requirements include: (1) Restricting the use of the sites to the disposal of dredged material that has been determined to be suitable for ocean disposal following MPRSA and/or CWA requirements in accordance with the provisions of MPRSA section 106(f), as well as to material from waters in the vicinity of the disposal sites; (2) monitoring the disposal sites and their associated reference sites, which are not used for dredged material disposal, to assess potential impacts to the marine environment by providing a point of comparison to an area unaffected by dredged material disposal; and (3) retaining the right to limit or close these sites to further disposal activity if monitoring or other information reveals evidence of unacceptable adverse impacts to the marine environment. As mentioned above, dredged material disposal will not be allowed when weather and sea conditions could interfere with safe, effective placement of any dredged material at a designated site. In addition, although not technically a site management requirement, disposal activity at the sites will generally be limited to the period between October 1 and April 30, but often less, depending on environmental windows, to protect certain species, as described above.

EPA and the USACE have managed and monitored dredged material disposal activities at disposal sites in Long Island Sound since the early 1980s. Site monitoring has been conducted under the USACE's DAMOS disposal site monitoring program. In accordance with the requirements of MPRSA section 102(c) and 40 CFR 228.3, EPA and the USACE have developed a SMMP for the ELDS, which is incorporated as Appendix I of the FSEIS. The SMMP describes in detail the specific management and monitoring requirements for the ELDS.

B. National Environmental Policy Act

As EPA explained in the preamble to the Proposed Rule, 81 FR 24760 (April 27, 2016), EPA disposal site designation evaluations conducted under the MPRSA have been determined to be ''functionally equivalent'' to NEPA reviews and, as a result, are not subject to NEPA analysis requirements as a matter of law. Nevertheless, as a matter of policy, EPA voluntarily uses NEPA procedures when evaluating the potential designation of ocean dumping sites. *See* 63 FR 58045 (Notice of Policy and Procedures for Voluntary Preparation of National Environmental Policy Act Documents, October 29, 1998).

EPA is the agency authorized by the MPRSA to designate dredged material disposal sites and is responsible for the site designation decision and the NEPA analysis supporting it. As discussed in detail in the preamble to the Proposed Rule, 81 FR 24761, EPA used a third-party contracting approach so that funding from the state of Connecticut could be applied to the support the site designation studies and the development of the FSEIS. *See* 40 CFR 1506.5. Because EPA is ultimately responsible for the FSEIS, the Agency worked closely with the state of Connecticut to select the contractors and then maintained close involvement with production of the SEIS and control over its analyses and conclusions. The U.S. Navy also contributed to the site designation process by funding

biological and other environmental studies in support of the FSEIS. The Navy, with extensive input from EPA and CTDEEP, used its contractor Tetra Tech based on its expertise in biological resources studies and risk assessment.

The USACE was a ''cooperating agency'' in the development of the FSEIS because of its knowledge concerning the region's dredging needs, its technical expertise in monitoring dredged material disposal sites and assessing the environmental effects of dredging and dredged material disposal, its history in the regulation of dredged material disposal in Long Island Sound and elsewhere, and its ongoing legal role in regulating dredging, dredged material disposal, and the management and monitoring of disposal sites. Other cooperating agencies were NMFS, CTDEEP, CT DOT, New York Department of State (NYSDOS), New York Department of Environmental Conservation (NYSDEC), and Rhode Island Coastal Resources Management Council (RICRMC). To take advantage of expertise of other entities, and to promote strong inter-agency communications, EPA also coordinated with the U.S. Fish and Wildlife Service; the Mashantucket (Western) Pequot Tribal Nation, Mohegan Tribe, Eastern Pequot Tribal Nation, and Paucatuck Eastern Pequot Indians (in Connecticut); the Narragansett Indian Tribe (in Rhode Island); the Shinnecock Indian Nation (in New York); and, as previously discussed, the CT SHPO and NY OPRHP. Throughout the SEIS development process, EPA communicated with the cooperating federal and state agencies and tribes to keep them apprised of progress on the project and to solicit input.

Consistent with its voluntary NEPA policy, EPA has undertaken NEPA analyses as part of its decision-making process for the designation of the ELDS. EPA published a Notice of Intent to prepare an EIS on October 16, 2012, invited other federal and state agencies to participate as cooperating or coordinating agencies, defined a ''Zone of Siting Feasibility'' in cooperation with the cooperating agencies, held public meetings regarding the scope of issues to be addressed by the SEIS, and published a DSEIS for public review and comment. The DSEIS, entitled, ''Draft Supplemental Environmental Impact Statement for the Designation of Dredged Material Disposal Site(s) in Eastern Long Island Sound, Connecticut and New York,'' assesses and compares the effects of designating alternative dredged material disposal sites in eastern Long Island Sound. EPA's SEIS also evaluated various alternative approaches to managing dredging needs, including the ''no action'' alternative (*i.e.,* the alternative of not designating any open-water disposal sites). *See* 40 CFR 1502.14. The DSEIS was considered supplemental because it updated and built upon the analyses that were conducted for the 2005 Long Island Sound Environmental Impact Statement that supported the designation of the Central and Western Long Island Sound disposal sites.

EPA released the DSEIS for a 60-day public comment period on April 27, 2016, and subsequently extended the comment period for 21 days, until July 18, 2016. EPA held four public hearings during the comment period: Two (afternoon and evening) on May 24 in Riverhead and Mattituck, NY, and two on May 25 in Groton, CT. As previously noted, EPA received extensive public comment, both in support of, and in opposition to, EPA's proposed action as described in the DSEIS and proposed rule.

After considering the public comments received, EPA conducted additional analysis and has now published an FSEIS in conjunction with, and as part of the support for, publication of this Final Rule designating the ELDS. EPA's FSEIS includes additional discussion and analysis pertaining to EPA's final site designation, including discussion and analysis supporting EPA's decision to adjust the boundaries of the ELDS as they were delineated in the Proposed Rule. Appendix J of the FSEIS includes all the public comments EPA received on the DSEIS and Proposed Rule, and provides a summary of those comments and EPA responses to those comments. EPA also has summarized the more significant comments and EPA's responses to them in Section VI of the preamble to this Final Rule.

C. Coastal Zone Management Act

Based on the evaluations presented in the FSEIS and supporting documents, and a review of the federally approved coastal zone programs and policies of Connecticut, New York, and Rhode Island, EPA determined that designation of the ELDS for open-water dredged material disposal under the MPRSA will be fully consistent with, or consistent to the maximum extent practicable with, the enforceable policies of the approved coastal zone management programs of the three states. EPA provided a written determination to that effect to the NYSDOS (on July 20, 2016), to CTDEEP (on July 29, 2016), and to the RICRMC (on July 28, 2016), respectively.

The specific policies of each state's coastal zone management program are discussed in detail in the determinations noted above, but in a general sense, there are several broad reasons why designation of the ELDS is consistent with the applicable, enforceable policies of the three states' coastal zone programs. First, the designation is not expected to cause any significant adverse impacts to the marine environment, coastal resources, or uses of the coastal zone. Indeed, EPA expects the designation to benefit coastal uses involving navigation and berthing of vessels by facilitating needed dredging, and to benefit the environment by limiting any open-water dredged material disposal to a small number of environmentally appropriate sites designated by EPA, rather than at a potential proliferation of USACE-selected sites. Second, designation of the site does not actually authorize the disposal of any dredged material at the sites. Any proposal to dispose dredged material from a particular project at a designated site will be subject to case-specific evaluation and be allowed only if: (a) The material satisfies the sediment quality requirements of the MPRSA and the CWA; (b) no practicable alternative method of management with less adverse environmental impact is available; and (c) the disposal complies with the site restrictions for the site. These restrictions are described and discussed in the next section of the preamble and are designed to reduce or eliminate dredged material disposal in Long Island Sound. Third, the designated disposal site will be managed and monitored pursuant to a SMMP and if adverse impacts are identified, use of the sites will be modified to reduce or eliminate those impacts. Such modification could further restrict, or even terminate, use of the sites, if appropriate. *See* 40 CFR 228.3, 228.11.

On August 9, 2016, the RICRMC sent EPA a letter concurring with EPA's CZMA determination for Rhode Island. Similarly, on September 26, 2016, CTDEEP, which administers Connecticut's coastal zone management program, sent EPA a letter concurring with EPA's CZMA determination for Connecticut.

On October 3, 2016, EPA received a letter from the NYSDOS objecting to EPA's designation of the ELDS on the basis of its view that either EPA had provided insufficient information to support a CZMA consistency determination or, based on the information provided, the action was inconsistent with the enforceable policies of New York's Coastal Management Program (CMP).

After giving careful consideration to the issues raised by NYSDOS, EPA continues to hold the view that designation of the ELDS, as specified herein, is consistent to the maximum extent practicable with the enforceable policies of New York's CMP. EPA also believes that the site use restrictions that have been made applicable to the ELDS provide enhanced assurance of such consistency.

D. Endangered Species Act

The ESA requires consultation with NMFS and/or USFWS to adequately address potential impacts to threatened and endangered species that may occur at the proposed dredged material disposal site from any proposal to dispose dredged material. EPA initiated consultations regarding the proposed ELDS with both the NMFS and USFWS, concurrent with the public comment period for the DSEIS. This consultation process is fully documented in the FSEIS. EPA provided the NMFS and USFWS with its conclusion that the proposed designation of the ELDS was not likely to adversely affect any federally listed endangered or threatened species, or designated critical habitat of any such species.

On August 11, 2016, USFWS sent an email message concurring with EPA's proposed action, stating that the designation of the ELDS, ''will have no effect on federally listed species under the jurisdiction of the U.S. Fish and Wildlife Service and that any effects from activities associated with the disposal of dredged material at this location will be consulted individually under section 7 of the ESA,'' and that, ''(f)urther consultation . . . is not necessary unless there is new information relative to listed species presence or there are changes to the project.''

On August 12, 2016, NMFS also concurred with EPA's ''conclusion that the proposed action is not likely to adversely affect the ESA-listed species under our jurisdiction and will have no effect on critical habitat since the action does not overlap with any proposed/designation (*sic*) critical habitat under our jurisdiction,'' and that, ''. . . no further consultation . . . is required.'' Copies of all consultation and coordination correspondence are provided in Appendices A–11 of the FSEIS.

E. Magnuson-Stevens Fishery Conservation and Management Act

The MSFCMA requires federal agencies to coordinate with NMFS regarding any action they authorize, fund, or undertake that may adversely affect essential fish habitat (EFH). EPA initiated coordination with NMFS on June 30, 2016, by submitting an EFH assessment in compliance with the Act. This coordination addressed the potential for the designation of any of the alternative disposal sites being evaluated to adversely affect EFH. In a letter dated August 12, 2016, NMFS concurred with EPA's determination that the designation of the ELDS would not adversely affect EFH. The letter stated, in part, ''We concur with your determination that by excluding the boulder areas located in the south and northwest corners of the proposed disposal site, and with the incorporation of your specific management practices that include a 200-foot buffer zone from the boulder areas, the proposed designation will result in no more than minimal adverse impacts to designated EFH.'' The coordination process is fully documented in the FSEIS.

IX. Restrictions

As described in the Proposed Rule, EPA is restricting the use of the ELDS in the same manner that it has restricted use of the CLDS and WLDS. On July 7, 2016, EPA published in the **Federal Register** (81 FR 44220) a final rule to amend the 2005 rule that designated the CLDS and WLDS, to establish new restrictions on the use of those sites to support the goal of reducing or eliminating open-water disposal in Long Island Sound. The restrictions include standards and procedures to promote the development and use of practicable alternatives to open-water disposal, including establishment of an interagency ''Steering Committee'' and ''Regional Dredging Team'' that will play important roles in implementation of the rule. The site use restrictions for the CLDS are detailed in 40 CFR 228.15(b)(4)(vi) and are incorporated for the WLDS by the cross-references in 40 CFR 228.15(b)(4)(vi) and (b)(5)(vi). Similarly, EPA is applying to the ELDS the same restrictions as are applied to the CLDS and WLDS by including simple cross-references to those restrictions in the new ELDS regulations at 40 CFR 228.15(b)(4) and (b)(6)(vi).

The restrictions incorporate standards and procedures for the use of the Eastern, Central and Western disposal sites consistent with the recommendations of the Long Island Sound DMMP. The DMMP identifies a wide range of alternatives to open-water disposal and recommends standards and procedures to help determine whether and which of these alternatives should be pursued for particular dredging projects. The DMMP addresses dredging and dredged material management issues for the entire Long Island Sound region, including the eastern portion of the Sound. Therefore, EPA concludes that it makes sense to apply site use restrictions based on the DMMP to the ELDS as well as to the CLDS and WLDS. EPA also received public comments in support of applying the site use restrictions to all Long Island Sound disposal sites.

The standards included in the restrictions are described in the Proposed Rule and address the disposition of sandy material, suitable fine-grained material and unsuitable fine-grained materials. *See* 81 FR 24764. *See also* 81 FR 44229 (40 CFR 228.15(b)(4)(vi)(C)(*3*)(*i*)–(*iii*)). Also included are expectations of continued federal, state and local efforts at source reduction (*i.e.,* reducing sediment entering waterways). EPA did not receive any comments on the standards and has not modified them in the Final Rule.

The restrictions augment the recommended procedures in the DMMP, and in the Proposed Rule, by establishing a Long Island Sound Dredging Steering Committee (Steering Committee), consisting of high-level representatives from the states of Connecticut and New York, EPA, USACE, and, as appropriate other federal and state agencies. Such other parties could include the National Oceanic and Atmospheric Administration's (NOAA) National Marine Fisheries Service (NMFS), which had a seat on the previous Steering Committee, and the state of Rhode Island, which had a seat on the previous Long Island Sound Regional Dredging Team (LIS RDT), and may have more interest now that the LIS RDT's geographic scope includes eastern Long Island Sound. The Steering Committee will provide policy-level direction to the Long Island Sound Regional Dredging Team (RDT). The Steering Committee is charged with: Establishing a baseline for the volume and percentage of dredged material being beneficially used and placed at the open-water sites; establishing a reasonable and practicable series of stepped objectives, including timeframes, to increase the percentage of beneficially used material while reducing the percentage and amount being disposed in open water, and while recognizing that the amounts of dredged material generated by the dredging program will naturally fluctuate from year to year; and develop accurate methods to track the placement of dredged material, with due consideration for annual fluctuations. The stepped objectives should

incorporate an adaptive management approach while striving for continuous improvement.

The restrictions provide that when tracking progress, the Steering Committee should recognize that exceptional circumstances may result in delays meeting an objective. Exceptional circumstances should be infrequent, irregular and unpredictable. It is expected that each of the member agencies will commit the necessary resources to support the Long Island Sound RDT and Steering Committee's work, including the collection of data necessary to support establishing the baseline and tracking and reporting on the future disposition of dredged material.

The restrictions also provide that the Steering Committee may utilize the RDT, as appropriate, to carry out the tasks assigned to it. The Steering Committee, with the support of the RDT, will guide a concerted effort to encourage greater use of beneficial use alternatives, including piloting alternatives, identifying possible resources and eliminating regulatory barriers as appropriate.

As described in the Proposed Rule, *see* 81 FR 24765, the restrictions establish the Long Island Sound RDT. *See also* 81 FR 44229–44230 (40 CFR 228.15(b)(4)(vi)(E) and (F)). The purpose of the RDT reflects its role and relationship to the Steering Committee. The purpose of the RDT is to: (1) Review dredging projects and report to USACE on its review within 30 days of receipt of project information; (2) assist the Steering Committee in the tasks described above; (3) serve as a forum for continuing exploration of new beneficial use alternatives, matching available beneficial use alternatives with dredging projects; (4) exploring cost-sharing opportunities and promoting opportunities for beneficial use of clean, parent marine sediments (that underlie surficial sediments and are not exposed to pollution) often generated in the development of Confined Aquatic Disposal cells; and (5) assist the USACE and EPA in continuing long-term efforts to monitor dredging impacts in Long Island Sound. The membership of the RDT will comprise representatives from the states of Connecticut and New York, EPA, USACE, and, as appropriate, other federal and state agencies. State participation on the RDT is voluntary. The geographic scope of the RDT, as well as details for the structure and process of the RDT, are unchanged from the Proposed Rule.

Finally, the restrictions provide that if the volume of open-water disposal of dredged material, as measured in 2026, has not declined or been maintained over the prior ten years, then any party may petition EPA to conduct a rulemaking to amend the restrictions of the use of the sites.

X. Supporting Documents

1. EPA Region 1/USACE NAE. 2005. Response to Comments on the Final Environmental Impact Statement for the Designation of Dredged Material Disposal Sites in Central and Western Long Island Sound, Connecticut and New York. U.S. Environmental Protection Agency, Region 1, Boston, MA and U.S. Army Corps of Engineers, New England District, Concord, MA. April 2005.

2. EPA Region 1. 2005. Memorandum to the File Responding to the Letter from the New York Department of State Objecting to EPA's Federal Consistency Determination for the Dredged Material Disposal Site Designations. U.S. Environmental Protection Agency, Region 1, Boston, MA. May 2005.

3. EPA Region 1/USACE NAE. 2004. Final Environmental Impact Statement for the Designation of Dredged Material Disposal Sites in Central and Western Long Island Sound, Connecticut and New York. U.S. Environmental Protection Agency, Region 1, Boston, MA and U.S. Army Corps of Engineers, New England District, Concord, MA. March 2004.

4. EPA Region 1/USACE NAE. 2004. Regional Implementation Manual for the Evaluation of Dredged Material Proposed for Disposal in New England Waters. U.S. Environmental Protection Agency, Region 1, Boston, MA, and U.S. Army Corps of Engineers, New England District, Concord, MA. April 2004.

5. EPA Region 2/USACE NAN. 1992. Guidance for Performing Tests on Dredged Material Proposed for Ocean Disposal. U.S. Environmental Protection Agency, Region 2, New York, NY and U.S. Army Corps of Engineers, New York District, New York, NY. Draft Release. December 1992.

6. EPA/USACE. 1991. Evaluation of Dredged Material Proposed for Ocean Disposal Testing Manual. U.S. Environmental Protection Agency, Washington, DC, and U.S. Army Corps of Engineers, Washington, DC. EPA–503/8–91/001. February 1991.

7. Long Island Sound Study. 2015. Comprehensive Conservation and Management Plan for Long Island Sound. Long Island Sound Management Conference. September 2015.

8. NYSDEC and CTDEP. 2000. A total maximum daily load analysis to achieve water quality standards for dissolved oxygen in Long Island Sound. Prepared in conformance with section 303(d) of the Clean Water Act and the Long Island Sound Study. New York State Department of Environmental Conservation, Albany, NY and Connecticut Department of Environmental Protection, Hartford, CT. December 2000.

9. USACE NAE. 2016. Final Long Island Sound Dredged Material Management Plan and Final Programmatic Environmental Impact Statement—Connecticut, Rhode Island and New York. U.S. Army Corps of Engineers, New England District. December 2015.

10. EPA Region 1. 2016. Draft Supplemental Environmental Impact Statement for the Designation of Dredged Material Disposal Site(s) in Eastern Long Island Sound, Connecticut and New York. U.S. Environmental Protection Agency, Region 1, Boston, MA. April 2016.

11. USACE NAE. 2016a. Memorandum from USACE New England District to EPA Region 1 with updated dredging and disposal capacity needs for Eastern Long Island Sound. U.S. Army Corps of Engineers, New England District. September 2016.

12. USACE NAE. 2016b. Memorandum from USACE New England District to EPA Region 1 with detailed cost estimates for dredged material disposal at different disposal sites in Long Island Sound. U.S. Army Corps of Engineers, New England District. September 2016.

XI. Statutory and Executive Order Reviews

1. Executive Order 12866: Regulatory Planning and Review and Executive Order 13563: Improving Regulation and Regulatory Review

This action is not a significant regulatory action, as defined in the Executive Order, and therefore was not submitted to the Office of Management and Budget (OMB) for review.

2. Paperwork Reduction Act (PRA)

This action does not impose an information collection burden under the PRA because it would not require persons to obtain, maintain, retain, report or publicly disclose information to or for a federal agency.

3. Regulatory Flexibility Act (RFA)

This action will not have a significant economic impact on a substantial number of small entities under the Regulatory Flexibility Act (RFA). The amended restrictions in this rule are only relevant for dredged material disposal projects subject to the MPRSA. Non-federal projects involving 25,000 cubic yards or less of material are not subject to the MPRSA and, instead, are regulated under CWA section 404. This action will, therefore, have no effect on such projects. ''Small entities'' under the RFA are most likely to be involved with smaller projects not covered by the MPRSA. Therefore, EPA does not believe a substantial number of small entities will be affected by today's rule. Furthermore, the amendments to the restrictions also will not have significant economic impacts on a substantial number of small entities because they will primarily create requirements to be followed by regulatory agencies rather than small entities, and will create requirements

(*i.e.,* the standards and procedures) intended to help ensure satisfaction of the existing regulatory requirement (*see* 40 CFR 227.16) that practicable alternatives to the ocean dumping of dredged material be utilized.

4. Unfunded Mandates Reform Act (UMRA)

This action does not contain any unfunded mandate as described in UMRA, 2 U.S.C. 1531–1538, and does not significantly or uniquely affect small governments. The action imposes no enforceable duty on any state, local or tribal governments or the private sector.

5. Executive Order 13132: Federalism

This action does not have federalism implications. It will not have substantial direct effects on the states, on the relationship between the national government and the states, or on the distribution of power and responsibilities among the various levels of government. Through the Steering Committee and RDT process, however, this action will provide a vehicle for facilitating the interaction and communication of interested federal and state agencies concerned with regulating dredged material disposal in Long Island Sound.

6. Executive Order 13175: Consultation and Coordination With Indian Tribal Governments

This action does not have tribal implications as specified in Executive Order 13175 because the proposed restrictions will not have substantial direct effects on Indian tribes, on the relationship between the federal government and Indian tribes, or the distribution of power and responsibilities between the federal government and Indian tribes. EPA coordinated with all Indian Tribal Governments in the vicinity of the proposed action and consulted with the Shinnecock Tribal Nation in making this determination.

7. Executive Order 13045: Protection of Children From Environmental Health Risks and Safety Risks

This action is not subject to Executive Order 13045 because it is not economically significant as defined in Executive Order 12866, and because the EPA does not believe the environmental health or safety risks addressed by this action present a disproportionate risk to children.

8. Executive Order 13211: Actions Concerning Regulations That Significantly Affect Energy Supply, Distribution or Use

This action is not subject to Executive Order 13211, because it is not a significant regulatory action under Executive Order 12866.

9. National Technology Transfer and Advancement Act (NTTAA)

This rulemaking does not involve technical standards.

10. Executive Order 12898: Federal Actions To Address Environmental Justice in Minority Populations and Low-Income Populations

The EPA concludes that this action will not have a disproportionate adverse human health or environmental effect on minority, low-income, or indigenous populations.

11. Executive Order 13158: Marine Protected Areas

Executive Order 13158 (65 FR 34909, May 31, 2000) requires EPA to ''expeditiously propose new science-based regulations, as necessary, to ensure appropriate levels of protection for the marine environment.'' EPA may take action to enhance or expand protection of existing marine protected areas and to establish or recommend, as appropriate, new marine protected areas. The purpose of the Executive Order is to protect the significant natural and cultural resources within the marine environment, which means, ''those areas of coastal and ocean waters, the Great Lakes and their connecting waters, and submerged lands thereunder, over which the United States exercises jurisdiction, consistent with international law.''

The EPA expects that this Final Rule will afford additional protection to the waters of Long Island Sound and organisms that inhabit them. Building on the existing protections of the MPRSA and the ocean dumping regulations, the rule is designed to promote the reduction or elimination of open-water disposal of dredged material in Long Island Sound, and, at the same time, to ensure that any such disposal that occurs will be conducted in an environmentally sound manner.

12. Executive Order 13547: Stewardship of the Ocean, Our Coasts, and the Great Lakes

Section 6(a)(i) of Executive Order 13547, (75 FR 43023, July 19, 2010) requires, among other things, EPA and certain other agencies ''. . . to the fullest extent consistent with applicable law [to] . . . take such action as necessary to implement the policy set forth in section 2 of this order and the stewardship principles and national priority objectives as set forth in the Final Recommendations and subsequent guidance from the Council.'' The policies in section 2 of Executive Order 13547 include, among other things, the following: ''. . . it is the policy of the United States to: (i) Protect, maintain, and restore the health and biological diversity of ocean, coastal, and Great Lakes ecosystems and resources; [and] (ii) improve the resiliency of ocean, coastal, and Great Lakes ecosystems, communities, and economies . . . .'' As with Executive Order 13158 (Marine Protected Areas), the overall purpose of the Executive Order is to promote protection of ocean and coastal environmental resources.

The EPA expects that this Final Rule will afford additional protection to the waters of Long Island Sound and the organisms that inhabit them. Building on the existing protections of the MPRSA and the ocean dumping regulations, the rule is designed to promote the reduction or elimination of open-water disposal of dredged material in Long Island Sound even as it facilitates necessary dredging.

13. Congressional Review Act

The Congressional Review Act, 5 U.S.C. 801 *et seq.,* as added by the Small Business Regulatory Enforcement Fairness Act of 1996, generally provides that before a rule may take effect, the agency promulgating the rule must submit a rule report, which includes a copy of the rule, to each House of the Congress and to the Comptroller General of the United States. EPA will submit a report containing this rule and other required information to the U.S. Senate, the U.S. House of Representatives, and the Comptroller General of the United States prior to publication of the rule in the **Federal Register**. A ''major rule'' cannot take effect until 60 days after it is published in the **Federal Register**. This action is not a major rule as defined by 5 U.S.C. 804(2). This rule will be effective 30 days after date of publication.

List of Subjects in 40 CFR Part 228

Environmental protection, Water pollution control.

Dated: November 4, 2016.

H. Curtis Spalding,

Regional Administrator, EPA Region 1—New England.

For the reasons stated in the preamble, title 40, chapter I, of the *Code of Federal Regulations* is amended as set forth below.

PART 228—CRITERIA FOR THE MANAGEMENT OF DISPOSAL SITES FOR OCEAN DUMPING

■ 1. The authority citation for part 228 continues to read as follows:

Authority: 33 U.S.C. 1412 and 1418.

■ 2. Section 228.15 is amended by revising paragraph (b)(4)(vi) introductory text and adding paragraph (b)(6) to read as follows:

§ 228.15 Dumping sites designated on a final basis.

* * * * *

(b) * * *

(4) * * *

(vi) *Restrictions:* The designation in this paragraph (b)(4) sets forth conditions for the use of the Central Long Island Sound (CLDS), Western Long Island Sound (WLDS) and Eastern Long Island Sound (ELDS) Dredged Material Disposal Sites. These conditions apply to all disposal subject to the MPRSA, namely, all federal projects and nonfederal projects greater than 25,000 cubic yards. All references to ''permittees'' shall be deemed to include the U.S. Army Corps of Engineers (USACE) when it is authorizing its own dredged material disposal from a USACE dredging project. The conditions for this designation are as follows:

* * * * *

(6) Eastern Long Island Sound Dredged Material Disposal Site (ELDS).

(i) *Location:* Corner Coordinates (NAD83) 41°15.81′ N., 72°05.23′ W.; 41°16.81′ N., 72°05.23′ W.; 41°16.81′ N., 72°07.22′ W.; 41°15.97′ N., 72°07.22′ W.; 41°15.81′ N., 72°06.58′ W.

(ii) *Size:* A 1 x 1.5 nautical mile irregularly-shaped polygon, with an area of 1.3 square nautical miles (nmi^2) due to the exclusion of bedrock areas. North-central bedrock area corner coordinates (NAD83) are: 41°16.34′ N., 72°05.89′ W.; 41°16.81′ N., 72°05.89′ W.; 41°16.81′ N., 72°06.44′ W.; 41°16.22′ N., 72°06.11′ W.

(iii) *Depth:* Ranges from 59 to 100 feet (18 m to 30 m).

(iv) *Primary use:* Dredged material disposal.

(v) *Period of use:* Continuing use.

(vi) *Restrictions:* See paragraphs (b)(4)(vi)(A) through (N) of this section.

* * * * *

[FR Doc. 2016–27546 Filed 12–5–16; 8:45 am]

BILLING CODE 6560–50–P

DEPARTMENT OF HEALTH AND HUMAN SERVICES

Administration for Children and Families

45 CFR Part 1302

RIN 0970–AC63

Head Start Program

AGENCY: Office of Head Start (OHS), Administration for Children and Families (ACF), Department of Health and Human Services (HHS).

ACTION: Final rule; delay of compliance date.

SUMMARY: The Office of Head Start will delay the compliance date for background checks procedures described in the Head Start Program Performance Standards final rule that was published in the **Federal Register** on September 6, 2016. We are taking this action to afford programs more time to implement systems that meet the background checks procedures and to align with deadlines for states complying with background check requirements found in the Child Care and Development Block Grant (CCDBG) Act of 2014.

DATES: The compliance date for the background checks procedures described in 45 CFR 1302.90(b) is delayed until September 30, 2017.

FOR FURTHER INFORMATION CONTACT: Colleen Rathgeb, Division Director of Early Childhood Policy and Budget, Office of Early Childhood Development, *OHS_NPRM@acf.hhs.gov,* (202) 358–3263 (not a toll-free call). Deaf and hearing impaired individuals may call the Federal Dual Party Relay Service at 1–800–877–8339 between 8 a.m. and 7 p.m. Eastern Standard Time.

SUPPLEMENTARY INFORMATION: The Head Start program provides grants to local public and private non-profit and for-profit agencies to provide comprehensive child development services to economically disadvantaged children and families and to help preschoolers develop the skills they need to be successful in school. We amended our Head Start program performance standards in a final rule that published in the **Federal Register** on September 6, 2016.

Head Start Program Performance Standards are the foundation for Head Start's mission to deliver comprehensive, high-quality individualized services to support children from low-income families prepare for school. They outline requirements grantees and delegate agencies must implement to operate high quality Head Start or Early Head Start programs and provide a structure to monitor and enforce quality standards.

Our performance standards highlight child safety as a top priority. We strengthen our criminal background checks process at 45 CFR 1302.90(b), in the final rule, to reflect changes in the Improving Head Start for School Readiness Act of 2007 (Act), 42 U.S.C. 9801 *et seq.,* and to complement background check requirements in the Child Care and Development Block Grant (CCDBG) Act of 2014, 20 U.S.C. 1431 *et seq.,* 20.

In the **SUPPLEMENTARY INFORMATION** section of the final rule, we provided a table, *Table 1: Compliance Table* that lists dates by which programs must implement specific standards. We list August 1, 2017 as the date by which programs must comply with background checks performance standards at 45 CFR 1302.90(b)(2), (4), and (5) in the final rule.

Generally, before a person is hired, we require programs to conduct a sex offender registry check and obtain either a state or tribal criminal history records, including fingerprint checks, or a Federal Bureau of Investigation (FBI) criminal history records, including fingerprint checks, before a person is hired. This performance standard under section 1302.90(b)(1) became effective the date the final rule was published. Programs were to have systems in place, by August 1, 2017, to accommodate this part of the background checks process.

In sections 1302.90 (b)(2), (4), and (5), we afford programs 90 days to obtain which ever check they could not obtain before the person was hired, as well as child abuse and neglect state registry check, if available; we require programs to have systems in place that ensure these newly hired employees do not have unsupervised access to children until their background process is complete; and we require programs to conduct complete background checks that consist of a sex offender registry check, state or tribal history records, including fingerprint checks and an FBI criminal history records, including fingerprint check, as well as a child abuse and neglect state registry check, if available, for each employee at least once every five years.

We believe programs will need more time to implement systems to complete the backgrounds checks process listed at sections 1302.90(b)(2), (4), and (5) in our final rule. Also, we recognize most states will have systems that can accommodate our programs' background checks requests by September 30, 2017.

The reason being, Congress requires states that receive CCDBG funds to use the same set of comprehensive background checks for all child care teachers and staff. These states must have requirements as well as policies and procedures to enforce and conduct criminal background checks for existing and prospective child care providers by September 30, 2017. We can minimize burden on programs that operate with both Head Start and Child Care Development Funds if we extend the time by which our programs must comply with section 1302.90(b) to September 30, 2017. Until September 30, 2017, the criminal record check requirements from section 648A of the Act remain in place.

We ordinarily publish a notice of proposed rulemaking in the **Federal Register** to provide a period for public comment before the provisions of a rule take effect in accordance with section 553(b) of the Administrative Procedure Act (APA) (5 U.S.C. 553(b)). However, we can waive this notice and comment procedure if the Secretary finds, for good cause, that the notice and comment process is impracticable, unnecessary, or contrary to the public interest, and incorporates a statement of the finding and the reasons therefore in the notice.

We find good cause to waive public comment under Section 553(b) of the Administrative Procedure Act because it is unnecessary and contrary to the public interest to provide for public comment in this instance. The delayed compliance date poses no harm or burden to programs or the public. To have provided a period for public comment would have only extended concern in the Head Start community of how they were going to comply with the requirement in a different timeframe than that afforded the child care program. Programs may voluntarily come into compliance at an earlier date if they have the processes already in place.

Dated: November 22, 2016.

Mark H. Greenberg,

Acting Assistant Secretary for Children and Families.

Approved: November 30, 2016.

Sylvia M. Burwell,

Secretary.

[FR Doc. 2016–29183 Filed 12–5–16; 8:45 am]

BILLING CODE P

DEPARTMENT OF COMMERCE

National Oceanic and Atmospheric Administration

50 CFR Part 648

[Docket No. 140214138–4482–02]

RIN 0648–XF043

Fisheries of the Northeastern United States; Atlantic Bluefish Fishery; Commercial Quota Harvested for the State of New York

AGENCY: National Marine Fisheries Service (NMFS), National Oceanic and Atmospheric Administration (NOAA), Commerce.

ACTION: Temporary rule; closure.

SUMMARY: NMFS announces that the 2016 commercial Atlantic bluefish quota allocated to the State of New York has been harvested. Vessels issued a commercial Federal permit for this fishery may not land bluefish in New York for the remainder of calendar year 2016, unless additional quota becomes available through a transfer from another state. Regulations governing these fisheries require publication of this notice to advise New York that the quota has been harvested, and to advise Federal vessel and dealer permit holders that no Federal commercial quota is available to land bluefish in New York.

DATES: Effective 0001 hours, December 2, 2016, through December 31, 2016.

FOR FURTHER INFORMATION CONTACT: Reid Lichwell, (978) 281–9112, or *Reid.Lichwell@noaa.gov.*

SUPPLEMENTARY INFORMATION: Regulations governing the bluefish fishery are found at 50 CFR part 648. The bluefish regulations require annual specification of a commercial quota that is apportioned on a percentage basis among the coastal states from Florida through Maine. The processes to set the bluefish annual commercial quotas and the percent allocated to each state are described in § 648.162.

The initial coast wide commercial quota for Atlantic bluefish for the 2016 fishing year was set at 4,884,780 lb (2,215,699 kg) (81 FR 51370; August 4, 2016). The percent allocated to New York is 10.39 percent, resulting in an initial commercial quota of 507,289 lb (230,103 kg). The 2016 allocation was adjusted to 877,289 lb (397,932 kg) (81 FR 85904; November 29, 2016) to reflect quota transfers from other states.

The Administrator, Greater Atlantic Region, NMFS (Regional Administrator), monitors the state commercial quotas and determines when a state's commercial quota has been harvested. NMFS is required to publish a notice in the **Federal Register** alerting Federal commercial vessel and dealer permit holders that, effective upon a specific date, the state's commercial quota has been harvested and no commercial quota is available to land bluefish in that state. The Regional Administrator has determined, based upon dealer reports and other available information, that New York has harvested its bluefish quota for 2016.

Section 648.4(b) provides that Federal permit holders agree, as a condition of the permit, not to land bluefish in any state that the Regional Administrator has determined no longer has commercial quota available. Therefore, vessels holding Federal commercial permits are prohibited from landing bluefish, effective 0001 hours, December 2, 2016, for the remainder of the 2016 calendar year, unless additional quota becomes available through a transfer and is announced in the **Federal Register**. Federally permitted dealers are also notified that they may not purchase bluefish, effective 0001 hours, December 2, 2016, from federally permitted vessels that land in New York for the remainder of the calendar year, or until additional quota becomes available through a transfer from another state.

Classification

This action is required by 50 CFR part 648 and is exempt from review under Executive Order 12866.

The Assistant Administrator for Fisheries, NOAA (AA), finds good cause pursuant to 5 U.S.C. 553(b)(B) to waive prior notice and the opportunity for public comment because it would be contrary to the public interest. This action closes the bluefish fishery for New York until January 1, 2017, under current regulations. The regulations at § 648.103(b) require such action to ensure that vessels do not exceed state quotas. If implementation of this closure was delayed to solicit public comment, the quota for this fishing year would be exceeded, thereby undermining the conservation objectives of the Atlantic Bluefish Fishery Management Plan. The AA further finds, pursuant to 5 U.S.C. 553(d)(3), good cause to waive the 30 day delayed effectiveness period for the reason stated above.

Authority: 16 U.S.C. 1801 *et seq.*

Dated: November 30, 2016.

Emily H. Menashes,

Acting Director, Office of Sustainable Fisheries, National Marine Fisheries Service.

[FR Doc. 2016–29137 Filed 12–1–16; 4:15 pm]

BILLING CODE 3510–22–P

DEPARTMENT OF COMMERCE

National Oceanic and Atmospheric Administration

50 CFR Part 660

[Docket No. 151117999–6370–01]

RIN 0648–XE680

Fisheries Off West Coast States; Modifications of the West Coast Commercial and Recreational Salmon Fisheries; Inseason Actions #6 Through #21

AGENCY: National Marine Fisheries Service (NMFS), National Oceanic and Atmospheric Administration (NOAA), Commerce.

ACTION: Modification of fishing seasons; request for comments.

SUMMARY: NMFS announces 16 inseason actions in the ocean salmon fisheries. These inseason actions modified the commercial and recreational salmon fisheries in the area from the U.S./Canada border to the U.S./Mexico border.

DATES: The effective dates for the inseason actions are set out in this document under the heading Inseason Actions. Comments will be accepted through December 21, 2016.

ADDRESSES: You may submit comments, identified by NOAA–NMFS–2016–0007, by any one of the following methods:

- *Electronic Submissions:* Submit all electronic public comments via the Federal eRulemaking Portal. Go to *www.regulations.gov/#!docketDetail;D=NOAA-NMFS-2016-0007,* click the ''Comment Now!'' icon, complete the required fields, and enter or attach your comments.
- *Mail:* Barry A. Thom, Regional Administrator, West Coast Region, NMFS, 7600 Sand Point Way NE., Seattle, WA 98115–6349

Instructions: Comments sent by any other method, to any other address or individual, or received after the end of the comment period, may not be considered by NMFS. All comments received are a part of the public record and will generally be posted for public viewing on *www.regulations.gov* without change. All personal identifying information (*e.g.,* name, address, etc.), confidential business information, or otherwise sensitive information submitted voluntarily by the sender will be publicly accessible. NMFS will accept anonymous comments (enter ''N/A'' in the required fields if you wish to remain anonymous).

FOR FURTHER INFORMATION CONTACT: Peggy Mundy at 206–526–4323.

SUPPLEMENTARY INFORMATION:

Background

In the 2016 annual management measures for ocean salmon fisheries (81 FR 26157, May 2, 2016), NMFS announced the commercial and recreational fisheries in the area from the U.S./Canada border to the U.S./Mexico border, beginning May 1, 2016, and 2017 salmon fisheries opening earlier than May 1, 2017. NMFS is authorized to implement inseason management actions to modify fishing seasons and quotas as necessary to provide fishing opportunity while meeting management objectives for the affected species (50 CFR 660.409). Inseason actions in the salmon fishery may be taken directly by NMFS (50 CFR 660.409(a)—Fixed inseason management provisions) or upon consultation with the Pacific Fishery Management Council (Council) and the appropriate State Directors (50 CFR 660.409(b)—Flexible inseason management provisions). The state management agencies that participated in the consultations described in this document were: Washington Department of Fish and Wildlife (WDFW), Oregon Department of Fish and Wildlife (ODFW), and California Department of Fish and Wildlife (CDFW).

Management of the salmon fisheries is generally divided into two geographic areas: north of Cape Falcon (U.S./Canada border to Cape Falcon, OR) and south of Cape Falcon (Cape Falcon, OR, to the U.S./Mexico border). The inseason actions reported in this document affected fisheries north and south of Cape Falcon. Within the north of Cape Falcon area, there are four management subareas: The Neah Bay subarea (also known as Washington state marine area 4) extends from the U.S./Canada border to Cape Alava, WA; the La Push subarea (also known as Washington state marine area 3) extends from Cape Alava, WA, to the Queets River, WA; the Westport subarea (also known as Washington state marine area 2) extends from the Queets River, WA, to Leadbetter Point, WA; and the Columbia River subarea (which includes Washington state marine area 1) extends from Leadbetter Point, WA, to Cape Falcon, OR. All times mentioned refer to Pacific daylight time.

Inseason Actions

Inseason Action #6

Description of action: Inseason action #6 cancelled the commercial ocean salmon fishery from Cape Alava to the Queets River (La Push subarea) previously scheduled for June 10–16, 2016 and June 24–30, 2016.

Effective dates: Inseason action #6 took effect on June 10, 2016, and remained in effect through June 30, 2016.

Reason and authorization for the action: The purpose of this action, in combination with inseason action #7, was to avoid exceeding the guideline set preseason for the Neah Bay and La Push subareas. The Regional Administrator (RA) considered Chinook landings to date and fishery effort and determined that this inseason action was necessary to meet the guideline set preseason. Inseason action to modify quotas and/or fishing seasons is authorized by 50 CFR 660.409(b)(1)(i).

Consultation date and participants: Consultation on inseason action #6 occurred on June 8, 2016. Participants in this consultation were staff from NMFS, Council, WDFW, and ODFW.

Inseason Action #7

Description of action: Inseason action #7 reduced the landing limit in the commercial ocean salmon fishery in the area from the U.S./Canada Border to Cape Alava (Neah Bay subarea, also known as Washington State Marine Area 4) from 40 Chinook per vessel per open period to 15 Chinook per vessel per open period. All fishers intending to fish north of Cape Alava must declare that intention before fishing by first notifying WDFW at 360–249–1215 with the following information: Boat name and approximate time they intend to fish in Washington State Marine Area 4, and destination at the end of the trip. All fish from Washington State Marine Area 4 must be landed before fishing any other area. All salmon from other areas must be landed before fishing for salmon in Washington State Marine Area 4. It is unlawful to possess salmon on board from any other area while also possessing salmon from Washington State Marine Area 4.

Effective dates: Inseason action #7 took effect on June 10, 2016, and remained in effect until superseded by inseason action #9 on June 24, 2016.

Reason and authorization for the action: The purpose of this action, in combination with inseason action #6, was to avoid exceeding the guideline set preseason for the Neah Bay and La Push subareas. The RA considered Chinook landings to date and fishery effort, and determined that this inseason action was necessary to meet the guideline set preseason. Inseason action to modify limited retention regulations is authorized by 50 CFR 660.409(b)(1)(ii).

Consultation date and participants: Consultation on inseason action #7

occurred on June 8, 2016. Participants in this consultation were staff from NMFS, Council, WDFW, and ODFW.

Inseason Action #8

Description of action: Inseason action #8 increased the landing limit in the commercial ocean salmon fishery in the area from the Queets River to Cape Falcon, OR (Westport and Columbia River subareas), from 40 Chinook per vessel per open period to 65 Chinook per vessel per open period.

Effective dates: Inseason action #8 took effect on June 10, 2016, and remained in effect until superseded by inseason action #10 on June 24, 2016.

Reason and authorization for the action: The purpose of this action was to allow greater access to available quota. The RA considered Chinook landings to date and fishery efforts, and determined that inseason action was required to allow the greater access to remaining Chinook quota in the May–June commercial fishery in the Westport and Columbia River subareas. Inseason action to modify limited retention regulations is authorized by 50 CFR 660.409(b)(1)(ii).

Consultation date and participants: Consultation on inseason action #8 occurred on June 8, 2016. Participants in this consultation were staff from NMFS, Council, WDFW, and ODFW.

Inseason Action #9

Description of action: Inseason action #9 reduced the landing limit in the commercial ocean salmon fishery in the area from the U.S./Canada Border to Cape Alava (Neah Bay subarea, also known as Washington State Marine Area 4) from 15 Chinook per vessel per open period to 14 Chinook per vessel per open period. All fishers intending to fish north of Cape Alava must declare that intention before fishing by first notifying WDFW at 360–249–1215 with the following information: boat name and approximate time they intend to fish in Washington State Marine Area 4, and destination at the end of the trip. All fish from Washington State Marine Area 4 must be landed before fishing any other area. All salmon from other areas must be landed before fishing for salmon in Washington State Marine Area 4. It is unlawful to possess salmon on board from any other area while also possessing salmon from Washington State Marine Area 4.

Effective dates: Inseason action #9 superseded inseason action #7 on June 24, 2016, and remained in effect through June 30, 2016.

Reason and authorization for the action: The purpose of this action was to avoid exceeding the guideline set preseason for the Neah Bay and La Push subareas. The RA considered Chinook landings to date and fishery effort, and determined that this inseason action was necessary to meet the guideline set preseason. Inseason action to modify limited retention regulations is authorized by 50 CFR 660.409(b)(1)(ii).

Consultation date and participants: Consultation on inseason action #9 occurred on June 22, 2016. Participants in this consultation were staff from NMFS, Council, WDFW, and ODFW.

Inseason Action #10

Description of action: Inseason action #10 decreased the landing limit in the commercial ocean salmon fishery in the area from the Queets River to Cape Falcon, OR (Westport and Columbia River subareas), from 65 Chinook per vessel per open period to 40 Chinook per vessel per open period.

Effective dates: Inseason action #10 superseded inseason action #8 on June 24, 2016, and remained in effect through June 30, 2016.

Reason and authorization for the action: The purpose of this action was to avoid exceeding the quota set preseason for the May–June fishery. The RA considered Chinook landings to date and fishery effort and determined that inseason action was required due to increased fishing effort and landings. Inseason action to modify limited retention regulations is authorized by 50 CFR 660.409(b)(1)(ii).

Consultation date and participants: Consultation on inseason action #10 occurred on June 22, 2016. Participants in this consultation were staff from NMFS, Council, WDFW, and ODFW.

Inseason Action #11

Description of action: Inseason action #11 increased the landing limit in the commercial ocean salmon fishery in the area from the U.S./Canada Border to Queets River, WA (Neah Bay and La Push subareas), from 50 Chinook per vessel per open period to 60 Chinook per vessel per open period.

Effective dates: Inseason action #11 took effect on July 8, 2016, and remained in effect until superseded by inseason action #16 on July 22, 2016.

Reason and authorization for the action: The purpose of this action was to allow access to available quota in the summer Chinook fishery. The RA considered Chinook landings and effort in the May–June fishery and the anticipated reduction in effort due to some fishers leaving the north of Falcon salmon fishery for other fisheries (*i.e.,* tuna and Alaska salmon) and determined that inseason action was appropriate to provide access to the available quota. Inseason action to modify limited retention regulations is authorized by 50 CFR 660.409(b)(1)(ii).

Consultation date and participants: Consultation on inseason action #11 occurred on June 22, 2016. Participants in this consultation were staff from NMFS, Council, WDFW, and ODFW.

Inseason Action #12

Description of action: Inseason action #12 increased the landing limit in the commercial ocean salmon fishery in the area from Queets River, WA, to Cape Falcon, OR (Westport and Columbia River subareas), from 50 Chinook per vessel per open period to 80 Chinook per vessel per open period.

Effective dates: Inseason action #12 took effect on July 8, 2016, and remained in effect until superseded by inseason action #16 on July 22, 2016.

Reason and authorization for the action: The purpose of this action was to allow access to available quota in the summer Chinook fishery. The RA considered Chinook landings and effort in the May–June fishery and the anticipated reduction in effort due to some fishers leaving the north of Falcon salmon fishery for other fisheries (*i.e.,* tuna and Alaska salmon) and determined that inseason action was appropriate to provide access to the available quota. Inseason action to modify limited retention regulations is authorized by 50 CFR 660.409(b)(1)(ii).

Consultation date and participants: Consultation on inseason action #12 occurred on June 22, 2016. Participants in this consultation were staff from NMFS, Council, WDFW, and ODFW.

Inseason Action #13

Description of action: Inseason action #13 extended retention of Pacific halibut caught incidental to commercial ocean salmon fishing (U.S./Canada border to U.S./Mexico border) beyond the June 30, 2016, closure date announced preseason. Pacific halibut retention will continue without any changes to landing and possession requirements until further notice.

Effective dates: Inseason action #13 took effect on July 1, 2016, and remains in effect until the earlier of the end of the 2016 commercial salmon season or until the remaining allocation of incidental halibut is landed, when a closure will be implemented by inseason action.

Reason and authorization for the action: The International Pacific Halibut Commission (IPHC) establishes an annual allocation of Pacific halibut that can be retained when caught incidental to commercial salmon fishing by fishers who possess the necessary IPHC license.

The annual ocean salmon management measures (81 FR 26157, May 2, 2016) authorized halibut retention only during April, May, and June of the 2016 commercial salmon seasons and after June 30, 2016, if quota remains. The RA considered Pacific halibut and Chinook salmon landings to date, and fishery effort, and determined that sufficient halibut allocation remained to allow retention to continue for the foreseeable future. Inseason action to modify quotas and/or fishing seasons is authorized by 50 CFR 660.409(b)(1)(i).

Consultation date and participants: Consultation on inseason action #13 occurred on June 22, 2016. Participants in this consultation were staff from NMFS, Council, WDFW, ODFW, and CDFW.

Inseason Action #14

Description of action: Inseason action #14 increased the landing limit in the commercial ocean salmon fishery from Cape Falcon, OR, to Humbug Mountain, OR, beginning September 1, from 40 Chinook per vessel per landing week (Thursday through Wednesday) to 45 Chinook per vessel per landing week (Thursday through Wednesday).

Effective dates: Inseason action #14 took effect September 1, 2016, and remains in effect until the end of the fishery, October 31, 2016, unless superseded by inseason action.

Reason and authorization for the action: This action was taken to implement guidance provided by the State of Oregon at the April 2016 Council meeting. The RA considered the information from the Council records and concurred with making this adjustment inseason. Inseason action to modify limited retention regulations is authorized by 50 CFR 660.409(b)(1)(ii).

Consultation date and participants: Consultation on inseason action #14 occurred on June 22, 2016. Participants in this consultation were staff from NMFS, Council, ODFW, and CDFW.

Inseason Action #15

Description of action: Inseason action #15 adjusted the Chinook salmon quota in the commercial ocean salmon fishery from Humbug Mountain, OR, to the Oregon/California border for the month of July 2016 from 200 Chinook to 594 Chinook, due to a rollover of unused quota from June.

Effective dates: Inseason action #15 took effect on July 8, 2016, and remained in effect through July 31, 2016.

Reason and authorization for the action: The annual ocean salmon management measures (81 FR 26157, May 2, 2016) for the commercial ocean salmon fishery in the Oregon Klamath Management Zone (Humbug Mountain, OR, to the Oregon/California border) include the following provision: Any remaining portion of the June Chinook quota may be transferred inseason on an impact-neutral basis to the July quota period. The June fishery closed with 510 Chinook salmon remaining on the quota. The Council's Salmon Technical Team calculated the rollover of these fish from the June-to-July fishing period on an impact neutral basis for Klamath River fall Chinook salmon. The resulting rollover amount was 394 Chinook; this was added to the 200 Chinook quota set preseason for July, for a total adjusted July quota of 594 Chinook salmon. The RA concurred with this impact-neutral rollover of quota. Inseason action to modify quotas and/or fishing seasons is authorized by 50 CFR 660.409(b)(1)(i).

Consultation date and participants: Consultation on inseason action #15 occurred on July 8, 2016. Participants in this consultation were staff from NMFS, Council, ODFW, and CDFW.

Inseason Action #16

Description of action: Inseason action #16 increased the landing limit in the commercial ocean salmon fishery from 60 Chinook per vessel per open period to 125 Chinook per vessel per open period in the area from the U.S./Canada border to Queets River, WA (Neah Bay and La Push subareas), and from 60 Chinook per vessel per open period to 150 Chinook per vessel per open period in the area from Queets River, WA, to Cape Falcon, OR (Westport and Columbia River subareas).

Effective dates: Inseason action #16 superseded inseason actions #11 and #12 on July 22, 2016, and remained in effect until superseded by inseason action #18 on August 1, 2016.

Reason and authorization for the action: The purpose of this action was to allow greater access to available quota. The RA considered Chinook landings to date and fishery efforts, and determined that inseason action was required to allow the greater access to remaining Chinook quota. Inseason action to modify limited retention regulations is authorized by 50 CFR 660.409(b)(1)(ii).

Consultation date and participants: Consultation on inseason action #16 occurred on July 20, 2016. Participants in this consultation were staff from NMFS, Council, WDFW, and ODFW.

Inseason Action #17

Description of action: Inseason action #17 adjusted the daily bag limit in the recreational ocean salmon fishery from Queets River, WA, to Leadbetter Point, WA (Westport subarea), to allow retention of two Chinook; previously only one Chinook was allowed.

Effective dates: Inseason action #17 took effect on July 23, 2016, and remained in effect through August 21, 2016.

Reason and authorization for the action: This action was taken to allow greater access to available quota. The RA considered Chinook landings to date and fishery efforts, and determined that inseason action was required to allow the greater access to remaining Chinook quota. Inseason action to modify recreational bag limits is authorized by 50 CFR 660.409(b)(1)(iii).

Consultation date and participants: Consultation on inseason action #17 occurred on July 20, 2016. Participants in this consultation were staff from NMFS, Council, WDFW, and ODFW.

Inseason Action #18

Description of action: Inseason action #18 increased the landing limit in the commercial ocean salmon fishery from the U.S./Canada border to Cape Falcon, OR, to 225 Chinook per vessel per open period. Previously, under inseason action #16, the landing limits were 125 Chinook in the Neah Bay and La Push subareas, and 150 Chinook in the Westport and Columbia River subareas.

Effective dates: Inseason action #18 superseded inseason action #16 on August 1, 2016, and remained in effect until superseded by inseason action #20 on August 15, 2016.

Reason and authorization for the action: The purpose of this action was to allow greater access to available quota. The RA considered Chinook landings to date and fishery efforts, and determined that inseason action was required to allow the greater access to remaining Chinook quota. Inseason action to modify limited retention regulations is authorized by 50 CFR 660.409(b)(1)(ii).

Consultation date and participants: Consultation on inseason action #18 occurred on July 29, 2016. Participants in this consultation were staff from NMFS, Council, WDFW, and ODFW.

Inseason Action #19

Description of action: Inseason action #19 adjusted the daily bag limit in the recreational ocean salmon fishery from Leadbetter Point, WA, to Cape Falcon, OR (Columbia River subarea), to allow retention of two Chinook; previously only one Chinook was allowed.

Effective dates: Inseason action #19 took effect on August 16, 2016, and remained in effect until the fishery was closed on August 27, 2016, under inseason action #21.

Reason and authorization for the action: This action was taken to allow greater access to available quota. The RA considered Chinook landings to date and fishery efforts, and determined that inseason action was required to allow the greater access to remaining Chinook quota. Inseason action to modify recreational bag limits is authorized by 50 CFR 660.409(b)(1)(iii).

Consultation date and participants: Consultation on inseason action #19 occurred on August 10, 2016. Participants in this consultation were staff from NMFS, Council, WDFW, and ODFW.

Inseason Action #20

Description of action: Inseason action #20 increased the landing limit in the commercial ocean salmon fishery from the U.S./Canada border to Cape Falcon, OR, from 225 Chinook per vessel per open period to 300 Chinook per vessel per open period.

Effective dates: Inseason action #20 superseded inseason action #18 on August 15, 2016, and remained in effect through August 23, 2016.

Reason and authorization for the action: The purpose of this action was to allow greater access to available quota. The RA considered Chinook landings to date and fishery efforts, and determined that inseason action was required to allow the greater access to remaining Chinook quota. Inseason action to modify limited retention regulations is authorized by 50 CFR 660.409(b)(1)(ii).

Consultation date and participants: Consultation on inseason action #20 occurred on August 10, 2016. Participants in this consultation were staff from NMFS, Council, WDFW, and ODFW.

Inseason Action #21

Description of action: Inseason action #21 closed the recreational ocean salmon fishery from Leadbetter Point, WA, to Cape Falcon, OR (Columbia River subarea), at 11:59 p.m., Saturday, August 27, 2016.

Effective dates: Inseason action #21 took effect at 11:59 p.m., Saturday, August 27, 2016.

Reason and authorization for the action: This action was taken in response to recent increases in fishing effort and catch of coho salmon in the Columbia River subarea, and fishery forecasts that projected the coho quota would soon be attained. The RA considered coho landings to date and fishery efforts, and determined that inseason action was required to avoid exceeding the coho quota for this fishery. Inseason action to close salmon fisheries when attainment of the quota is projected is authorized by 50 CFR 660.409(a)(1).

Consultation date and participants: Consultation on inseason action #21 occurred on August 26, 2016. Participants in this consultation were staff from NMFS, Council, WDFW, and ODFW.

All other restrictions and regulations remain in effect as announced for the 2016 ocean salmon fisheries and 2017 salmon fisheries opening prior to May 1, 2017 (81 FR 26157, May 2, 2016) and as modified by prior inseason actions.

The RA determined that the best available information indicated that halibut, coho, and Chinook salmon abundance forecasts and expected fishery effort supported the above inseason actions recommended by the states of Washington and Oregon. The states manage the fisheries in state waters adjacent to the areas of the U.S. exclusive economic zone in accordance with these Federal actions. As provided by the inseason notice procedures of 50 CFR 660.411, actual notice of the described regulatory actions was given, prior to the time the action was effective, by telephone hotline numbers 206–526–6667 and 800–662–9825, and by U.S. Coast Guard Notice to Mariners broadcasts on Channel 16 VHF–FM and 2182 kHz.

Classification

The Assistant Administrator for Fisheries, NOAA (AA), finds that good cause exists for this notification to be issued without affording prior notice and opportunity for public comment under 5 U.S.C. 553(b)(B) because such notification would be impracticable. As previously noted, actual notice of the regulatory actions was provided to fishers through telephone hotline and radio notification. These actions comply with the requirements of the annual management measures for ocean salmon fisheries (81 FR 26157, May 2, 2016), the FMP, and regulations implementing the FMP (50 CFR 660.409 and 660.411). Prior notice and opportunity for public comment was impracticable because NMFS and the state agencies had insufficient time to provide for prior notice and the opportunity for public comment between the time Chinook salmon catch and effort projections were developed and fisheries impacts were calculated, and the time the fishery modifications had to be implemented in order to ensure that fisheries are managed based on the best available scientific information, ensuring that conservation objectives and ESA consultation standards are not exceeded. The AA also finds good cause to waive the 30-day delay in effectiveness required under 5 U.S.C. 553(d)(3), as a delay in effectiveness of these actions would allow fishing at levels inconsistent with the goals of the FMP and the current management measures.

These actions are authorized by 50 CFR 660.409 and 660.411 and are exempt from review under Executive Order 12866.

Authority: 16 U.S.C. 1801 *et seq.*

Dated: November 30, 2016.

Emily H. Menashes,

Acting Director, Office of Sustainable Fisheries, National Marine Fisheries Service.

[FR Doc. 2016–29135 Filed 12–5–16; 8:45 am]

BILLING CODE 3510–22–P

Proposed Rules

Federal Register
Vol. 81, No. 234
Tuesday, December 6, 2016

This section of the FEDERAL REGISTER contains notices to the public of the proposed issuance of rules and regulations. The purpose of these notices is to give interested persons an opportunity to participate in the rule making prior to the adoption of the final rules.

DEPARTMENT OF AGRICULTURE

Agricultural Marketing Service

7 CFR Parts 944, 980, and 999

[Doc. No. AMS–SC–16–0064; SC16–980–1 PR]

Changes to Reporting Requirements—Vegetable and Specialty Crop Import Regulations; and Other Clarifying Changes—Fruit, Vegetable, and Specialty Crop Import Regulations

AGENCY: Agricultural Marketing Service, USDA.

ACTION: Proposed rule.

SUMMARY: This proposed rule would change the reporting requirements for certain Irish potatoes, tomatoes, and onions regulated under § 608(e) of the Agricultural Marketing Agreement Act of 1937 (section 8e of the Act) by requiring importers of those regulated commodities that have been certified by a designated governmental inspection service other than the Federal or Federal-State Inspection Service as meeting 8e requirements to provide the inspection certificate number and a copy of the certificate to AMS (currently, the Canadian Food Inspection Agency is the only entity so designated). In addition, the pistachio import regulations would be changed to provide for the electronic filing of aflatoxin test results and to eliminate a requirement to report the disposition of reworked or failed lots of pistachios. Other changes would be made to several of the 8e regulations to remove or replace outdated information. These changes would allow AMS to confirm that section 8e regulatory requirements are being met and would also support the International Trade Data System (ITDS), a key White House economic initiative that will automate the filing of import and export information by the trade.

DATES: Comments must be received by January 5, 2017.

ADDRESSES: Interested persons are invited to submit written comments concerning this proposal. Comments must be sent to the Docket Clerk, Marketing Order and Agreement Division, Specialty Crops Program, AMS, USDA, 1400 Independence Avenue SW., STOP 0237, Washington, DC 20250–0237; Fax: (202) 720–8938; or Internet: *http://www.regulations.gov.* All comments should reference the document number and the date and page number of this issue of the **Federal Register** and will be made available for public inspection in the Office of the Docket Clerk during regular business hours, or can be viewed at: *http://www.regulations.gov.* All comments submitted in response to this proposal will be included in the record and will be made available to the public. Please be advised that the identity of the individuals or entities submitting the comments will be made public on the Internet at the address provided above.

FOR FURTHER INFORMATION CONTACT: Shannon Ramirez, Compliance and Enforcement Specialist, or Vincent Fusaro, Compliance and Enforcement Branch Chief, Specialty Crops Program, AMS, USDA; Telephone: (202) 720–2491, Fax: (202) 720–8938, or Email: *Shannon.Ramirez@ams.usda.gov* or *VincentJ.Fusaro@ams.usda.gov.*

Small businesses may request information on complying with this regulation by contacting Richard Lower, Marketing Order and Agreement Division, Specialty Crops Program, AMS, USDA, 1400 Independence Avenue SW., STOP 0237, Washington, DC 20250–0237; Telephone: (202) 720–2491, Fax: (202) 720–8938, or Email: *Richard.Lower@ams.usda.gov.*

SUPPLEMENTARY INFORMATION: This proposed rule is issued under section 8e of the Agricultural Marketing Agreement Act of 1937, as amended (7 U.S.C. 601–674), hereinafter referred to as the ''Act.'' Section 8e provides that whenever certain commodities are regulated under Federal marketing orders, imports of those commodities into the United States are prohibited unless they meet the same or comparable grade, size, quality, and/or maturity requirements as those in effect for the domestically produced commodities. The Act also authorizes USDA to perform inspections on those imported commodities and to certify whether those requirements have been met.

Parts 944, 980, and 999 of title 7 of the Code of Federal Regulations (CFR) specify inspection, certification, and reporting requirements for imported commodities regulated under 8e, including the governmental inspection services that are authorized to perform certification.

The Department of Agriculture (USDA) is issuing this proposed rule in conformance with Executive Orders 12866, 13563, and 13175.

This proposal has been reviewed under Executive Order 12988, Civil Justice Reform. This proposed rule is not intended to have retroactive effect.

There are no administrative procedures that must be exhausted prior to any judicial challenge to the provisions of import regulations issued under section 8e of the Act.

This proposal invites comments on revisions to the reporting requirements for certain Irish potatoes, tomatoes, and onions regulated under part 980, the vegetable import regulations. This proposal would require importers of those regulated commodities that have been certified by a designated governmental inspection service other than the Federal or Federal-State Inspection Service as meeting 8e requirements to electronically enter the inspection certificate number and upload an electronic copy of the certificate to AMS. Currently, the Canadian Food Inspection Agency (CFIA) is the only designated non-Federal/Federal-State Inspection Service; therefore, references to the reporting requirement proposed in this rule will hereinafter be described as ''CFIA'' or ''Canadian'' inspection certificates and/or inspection information.

In the event an importer was unable to enter the CFIA inspection information electronically, he or she would be required to provide a copy of the certificate to AMS via email, mail, or facsimile.

In addition, this rule proposes changes to two pistachio import reporting requirements in § 999.600 of the specialty crop import regulations: the *Imported Pistachios—Lot Notification* report (form FV–249) and the *Imported Pistachios—Rework and Failed Lot Disposition* report (form FV–251). Both forms have been previously

approved for use by the Office of Management and Budget (OMB) under OMB No. 0581–0215, Pistachios Grown in California, Arizona, and New Mexico (although these two forms are included in the OMB information collection for the domestic pistachio marketing order, they are used strictly for reporting related to imported pistachios). The pistachio regulations currently require that USDA or USDA-accredited laboratories complete a form FV–249 for all lots of imported pistachios that fail to meet aflatoxin requirements and submit the form to USDA, CBP, and the importer who requested the aflatoxin test. The regulations also require that importers of pistachios complete and submit to USDA and CBP a form FV–251 for lots that fail to meet aflatoxin requirements when the lots are reworked for further testing or, when not reworked, are exported, sold for non-human consumption, or destroyed.

Under this proposal, the form FV–249 would be submitted electronically, and the regulations would require the reporting of all aflatoxin test results (both ''meets'' and ''fails'') to USDA. AMS has confirmed with CBP that it does not need to receive the FV–249, and importers already receive ''meets'' and ''fails'' test results from the laboratories in the form of aflatoxin test certificates; therefore, the laboratories would electronically submit this form only to USDA. Importers would no longer be required to submit the form FV–251 because AMS has determined that information provided on this form is available from other sources. AMS will consider in the future if the FV–251 should be extracted from the information collection. Providing for electronic submission of the FV–249 and removing the requirement that importers submit the FV–251 would support the ITDS initiative by streamlining processes and reducing the burden on America's import trade without compromising AMS's ability to ensure compliance with its import regulations.

This proposed rule would also make other changes to the fruit, vegetable, and specialty crop import regulations in §§ 944.400, 944.401, 980.1, 980.117, 980.212, 999.1, 999.100, 999.300, and 999.400. These changes, which include updating agency and program names and contact information, and removing or updating other information that is out of date, would help ensure the import regulations contain accurate information and align with the ITDS objective of streamlining import processes for the trade.

Certification by Canadian Food Inspection Agency (CFIA)

In part 980, the following sections prescribe the grade, size, quality, and maturity requirements for imported vegetable commodities that are regulated under section 8e of the Act: § 980.1(b) for potatoes, § 980.117(b) for onions, and § 980.212(b) for tomatoes. Further, the following sections in part 980 specify the governmental inspection services that are designated to certify that grade, size, quality, and maturity requirements of the commodities have been met: § 980.1(f) for potatoes, § 980.117(e) for onions, and § 980.212(e) for tomatoes. Part 980 also specifies that an inspection certificate issued by a designated government inspection service certifying that the potatoes, onions, and tomatoes meet the import requirements is required for all imports (§§ 980.1(g), 980.117(f), and 980.212(f) for potatoes, onions, and tomatoes, respectively).

As noted above, the vegetable import regulations specify those domestic and foreign government inspection services that are designated to certify that imported potatoes, onions, and tomatoes meet grade, size, quality, and maturity requirements. Currently, the only foreign designated governmental inspection service is the Canadian Food Inspection Agency (CFIA).

When importers have potatoes, onions, or tomatoes inspected in Canada prior to import into the United States, an inspection certificate is provided to the importer that certifies that the commodity meets section 8e import requirements. These certificates are comprised of various formats, including a *Certificate of Inspection for Fresh Fruits and Vegetables—Shipping Point* (also known as E2 and E3 forms) and an *Export Document for C–PIQ Establishments—Fresh Fruits and Vegetables* (also known as a C–PIQ form). CFIA issues C–PIQ forms to C–PIQ establishments that meet the requirements defined within the CFIA quality assurance program known as ''Canadian Partners in Quality'' (C–PIQ). The C–PIQ program is applicable to potatoes only (*i.e.,* not onions or tomatoes). All of these certificates contain similar information as required by the vegetable import regulations, including the date of inspection, the name of the shipper, the commodity inspected, the quantity of the commodity covered by the certificate, and a statement indicating that the commodity meets the import requirements of section 8e of the Act.

Currently, Canadian certificates that certify that potatoes, onions, and tomatoes meet 8e requirements are presented to the United States Customs and Border Protection (CBP) at the United States/Canadian border, prior to entry into the United States. AMS conducts periodic reviews at CFIA offices and potato handling facilities in various Canadian provinces during which inspectors from AMS's Specialty Crops Inspection (SCI) Division, as well as Compliance and Enforcement Specialists from AMS's Marketing Order and Agreement Division (MOAD), observe inspection processes and review records at traditional shipping points and maintained under the C–PIQ program for potatoes exported from Canada to the United States. However, importers are not currently required to submit copies of the Canadian E2, E3, or C–PIQ certificates or otherwise provide proof of Canadian inspection to AMS.

Electronic Entry of Canadian Certificate Information in the Automated Commercial Environment (ACE)

The United States Customs and Border Protection's (CBP) Automated Commercial Environment (ACE) is the primary system through which the global trade community electronically files information about imports and exports so that admissibility into the United States may be determined and government agencies may monitor compliance. ACE is the platform that provides a ''single window'' through which the global trade community electronically files shipment data, instead of completing or submitting paper-based forms to report the same information to different government agencies. This ''single window'' concept is a key component of the International Trade Data System (ITDS), a White House economic initiative that has been under development for over ten years and is mandated for completion by December 31, 2016 (pursuant to Executive Order 13659, *Streamlining the Export/Import Process for America's Businesses,* signed by President Obama on February 19, 2014; 79 FR 10657). ITDS is designed to greatly reduce the burden on America's import and export trade while still providing information to government agencies that is necessary for the United States to ensure compliance with its laws.

In conjunction with the full implementation of the ITDS ''single window,'' CBP is requiring that government agencies participating in the ITDS project, including AMS, ensure that regulations provide for the electronic entry of import and/or export information.

AMS has developed and deployed a new automated system called the

Compliance and Enforcement Management System (CEMS) that interfaces with CBP's ACE system in support of ITDS. CEMS electronically links with the ACE system to create a ''pipeline'' through which data is transmitted between MOAD and CBP. CEMS validates information electronically entered by importers in ACE and transmits messages to CBP about whether a shipment may be released for importation into the United States.

AMS has determined that the changes to the vegetable import regulations proposed in this rule meet CBP's requirements for ITDS by providing for the electronic entry in ACE of certification information for potatoes, onions, and tomatoes inspected by CFIA prior to import into the United States. This data would be transmitted from CBP's ACE to AMS's CEMS, where it would be electronically validated. Upon validation, CEMS would transmit an electronic message back to ACE indicating the shipment is cleared for import into the United States. The proposed changes to the vegetable import regulations would automate and streamline the entry and reporting process for importers while enhancing AMS's ability to ensure compliance with its import regulations.

These proposed changes would also provide an option for importers to provide AMS with a paper copy of a CFIA certificate, via email, mail, or facsimile, in the event an importer is unable to electronically provide the required certificate number and image in ACE.

Imported Pistachio Regulation Reporting Changes

The pistachio import regulations provide that each pistachio sample drawn and prepared for aflatoxin testing by a USDA-authorized inspector be submitted to a USDA or USDA-accredited laboratory for analysis (§ 999.600(e)). Lots that fail to meet the aflatoxin requirements currently must be reported by the laboratories to USDA, CBP, and the importer using an *Imported Pistachios—Failed Lot Notification* report (form FV–249), pursuant to §§ 999.600(e), (g) and (h). Importers are also currently required to report the disposition of reworked and failed lots to USDA and CBP using an *Imported Pistachios—Rework and Failed Lot Disposition* report (form FV–251), pursuant to §§ 999.600(g) and (h). Both the FV–249 and FV–251 are paper forms.

Section 999.600(f) provides that the laboratories provide an aflatoxin inspection certificate to importers that contains, among other things, a statement as to whether the lot meets or fails the import requirements under section 8e of the Act. Thus, all aflatoxin test results are provided to importers by the testing laboratories.

Section 999.600 would be revised by changing the reporting requirements for laboratories (form FV–249) and importers (form FV–251). USDA and USDA-accredited laboratories currently submit a paper form FV–249 to USDA, CBP, and an importer when a lot fails to meet the aflatoxin requirements of the pistachio import regulations. The testing laboratories are now meeting this requirement and are also voluntarily providing information to USDA about lots that meet aflatoxin requirements; in other words, the laboratories are providing all aflatoxin test results to USDA, not just failed lot notifications. Importers currently complete and submit to USDA and CBP a paper form FV–251 to report the disposition of reworked or failed lots.

To streamline the regulations and eliminate the paper-based reporting process, AMS would convert the existing FV–249 to an electronic format. The electronic format would provide for the laboratories to report all aflatoxin test results to AMS, in line with the current practice. USDA's Science and Technology Program approves and accredits laboratories to perform chemical analyses of pistachios for aflatoxin content. The regulations would require accredited laboratories to submit aflatoxin test results to AMS using the electronic form FV–249, and USDA laboratories would also use the electronic form FV–249 to submit test results to AMS. AMS has determined that CBP does not require this test result information, and the laboratories already provide importers with certificates for all aflatoxin tests; therefore, the laboratories would be required to electronically submit the FV–249 to only USDA and not to CBP or importers.

In addition to the changes to laboratory-reporting requirements, § 999.600 would be revised to remove the requirement that importers report the disposition of reworked or failed lots to USDA and CBP using the *Imported Pistachios—Rework and Failed Lot Disposition* report (form FV–251). When this form was included in a proposed rule published in the **Federal Register** on October 11, 2011 (76 FR 65411) and implemented in a final rule published in the **Federal Register** on August 27, 2012 (77 FR 51686), AMS believed that the most effective way to ensure compliance with the rework and failed lot disposition requirements of the pistachio import regulations was to require importers to submit the form FV–251 with details about reworked, exported, sold for non-human consumption, or destroyed lots. Since that time, however, AMS has determined that the information provided on this form is available from other sources (for example, destruction information is available from AMS's Specialty Crops Inspection Division) or requires additional follow up with an importer. The requirements for rework and final disposition of failed lots is not changing; only the reporting associated with these requirements is changing. The proposal to remove the requirement that importers use the paper form FV–251 would support the full implementation of ITDS by streamlining processes and reducing the burden on importers while allowing AMS to continue to ensure compliance with import regulations. AMS will consider proposing removal of the form FV–251 from the information collection during the next renewal of the forms package.

Accordingly, §§ 999.600(e), (g), and (h) would be revised to reflect the changes to reporting noted above.

Other Changes

To further ensure that the fruit, vegetable, and specialty crop import regulations provide accurate information to the import trade and in furtherance of streamlining processes in support of ITDS, the following changes would be made:

Contact information for inspection offices and ports of entry, and references to importers making various advance arrangements for inspection services would be revised or removed from the fruit import regulations at §§ 944.400(a) (designated inspection services and procedures), 944.401(c) (olives); the vegetable import regulations at §§ 980.1(g)(1)(ii) (potatoes), 980.117(f)(3) (onions); 980.212(f)(3) (tomatoes); and in the specialty crop regulations at §§ 999.1(c)(1) (dates), 999.100(c)(4) (walnuts), 999.300(c)(3) (raisins), and 999.400(c)(2) (filberts). The contact information for individual inspection offices and ports of entry is currently out of date in many of these sections. Under ITDS, importers will electronically file initial requests for inspection (SC–357, *Initial Inspection Request for Regulated Import Commodities*), which will alert the appropriate inspection office and CBP that a regulated commodity will be arriving that will require inspection at the port of entry or at another location. This electronic process will provide the needed advance notice to the inspection service. AMS's Specialty Crops

Inspection (SCI) Division intends to amend its inspection application regulations (7 CFR parts 51 and 52) to provide for the electronic filing of the initial request for inspection, thereby meeting CBP's requirement that the regulations of agencies participating in ITDS be revised to provide for electronic filing of shipment entry data. This proposed rule would add contact information (address, telephone number, and facsimile numbers) for the main SCI office in Washington, DC, in the event importers need any information about inspection services. This change would also make the fruit, vegetable, and specialty crop regulations more current and consistent.

Proposed administrative changes would include updating the USDA agency and program names in §§ 944.400(a) (designated inspection services and procedures) and 944.401(a)(5) and (c) (olives) in the fruit import regulations; 980.1(f) (potatoes), 980.117(e) (onions), and 980.212(e) (tomatoes) in the vegetable import regulations; and 999.600(h) (pistachios) in the specialty crop import regulations. Additionally, the word ''nectarines'' would be removed from § 944.400(a) (designated inspection services and procedures) of the fruit import regulations. Nectarines were regulated in the past but are not currently regulated under the fruit import regulations and should not, therefore, be listed in this section.

Initial Regulatory Flexibility Analysis

Pursuant to requirements set forth in the Regulatory Flexibility Act (RFA) (5 U.S.C. 601–612), the Agricultural Marketing Service (AMS) has considered the economic impact of this action on small entities. Accordingly, AMS has prepared this initial regulatory flexibility analysis.

The purpose of the RFA is to fit regulatory actions to the scale of businesses subject to such actions in order that small businesses will not be unduly or disproportionately burdened.

Small agricultural service firms, which includes importers, are defined by the Small Business Administration (SBA) as those having annual receipts of less than $7,500,000 (13 CFR 121.201).

This proposed action would change the import regulations for potatoes, onions, and tomatoes by requiring importers to enter the certificate number and upload an electronic image of the certificate for those shipments certified by CFIA as meeting 8e requirements into CBP's ACE system, for transmission to AMS, prior to import into the United States. If an importer is unable to provide this information electronically in ACE, a copy of the certificate would have to accompany the shipment at entry into the United States, and the importer would also have to submit a copy of the certificate to AMS via email, mail, or facsimile.

Based on 2015 information from CBP, USDA estimates there are 25 importers of potatoes from Canada, 13 importers of onions from Canada, and 12 importers of tomatoes from Canada. Although USDA has limited access to data about the business sizes of these importers, it is likely that the majority may be classified as small entities.

According to data from CBP and USDA's Foreign Agricultural Service (FAS), USDA estimates that in 2015, there were 894,945,959 pounds of potatoes, onions, and tomatoes that were subject to 8e regulations that were imported from Canada into the U.S. The table below provides a breakdown of this information by commodity:

VEGETABLES REGULATED UNDER SECTION 8e—IMPORTED FROM CANADA IN 2015

Commodity	Number of entries	Weight in pounds
Potatoes	20,146	728,594,707
Onions	13,591	158,918,237
Tomatoes	634	7,333,015

Currently, importers of Canadian potatoes, onions, and tomatoes that are certified by CFIA as meeting 8e requirements are not required to provide AMS with proof of this certification. The proposed change to require electronic entry of a CFIA certificate number and an electronic copy of the certificate through ACE would provide importers with an automated method of submitting this information to AMS at the same time they are electronically entering information about the shipment as required by other agencies, such as CBP. This electronic filing option should streamline business operations, both for importers of these commodities and for USDA, which would use the electronically submitted data to monitor compliance with 8e regulations. Electronic submission of this certificate information would meet CBP's requirement to ensure that the regulations of those government agencies participating in the ITDS project, such as AMS, provide for the electronic submission of required data. This change would create a minimal burden on importers while providing AMS with the ability to properly monitor imported vegetable shipments for compliance with the import regulations.

In the event an importer would be unable to electronically provide the required certificate number and electronic copy of the certificate in ACE, this proposed change would require that a paper copy of the CFIA certificate accompany the shipment at entry and would also provide for the submission of a copy of the certificate to AMS via email, mail, or facsimile.

This proposed action would also change the pistachio import regulations by modifying the reporting requirements for USDA or USDA-accredited laboratories that perform chemical analyses of aflatoxin levels in imported pistachios. The regulations would require these laboratories to submit all aflatoxin test results to USDA instead of only the results of failed lots; however, the laboratories are already voluntarily providing all test results to AMS. AMS reports that most of the aflatoxin chemical analyses are performed by the USDA Science and Technology Program laboratory in Blakely, Georgia, which is not subject to RFA analysis.

There are currently nine USDA-accredited laboratories that perform chemical analyses on aflatoxin levels for imported pistachios to determine if they meet 8e requirements. Although USDA does not have access to data about the business sizes of these laboratories, it is likely that the majority may be classified as large entities.

USDA's Foreign Agricultural Service (FAS) estimates that in 2015, 2,743,823 pounds of pistachios (shelled and inshell) were imported into the United States. According to FAS data, most of those pistachios were imported from Turkey, with additional imported pistachios coming from other countries that include Canada, Italy, the United Kingdom, Greece, Thailand, and Germany. For those pistachios imported in 2015, AMS received 8 failed lot

notifications from two of the USDA-accredited laboratories, as required by the regulations, and voluntarily received notifications from four of the USDA-accredited laboratories that 54 lots met 8e aflatoxin level requirements. The total test results received in 2015 (62) divided among the nine USDA-accredited labs would average 7 test results per year for each USDA-accredited laboratory. Because the laboratories currently provide AMS with both ''meets'' and ''fails'' aflatoxin test results, there is not expected to be any additional cost as a result of this action.

Regarding alternatives to this action, AMS determined that these changes to the regulations are needed to comply with the ITDS mandate and to provide AMS with information it requires to ensure compliance with its regulations. As noted earlier, CBP is requiring all government agencies who are partnering with CBP on the ITDS initiative (including AMS) to update their regulations to provide for the electronic entry of import and export shipment data. Providing for the entry of certificate information in ACE for potatoes, onions, and tomatoes imported from Canada that have been certified by CFIA as meeting 8e requirements enhances AMS's ability to monitor compliance while also meeting the objectives of ITDS to streamline processes for the import trade. In addition, changing the pistachio regulations by revising the reporting requirements would streamline the regulations and reduce the burden on the trade. The other changes proposed in this action would also provide the import trade with accurate information.

In accordance with the Paperwork Reduction Act of 1995 (44 U.S.C. Chapter 35), AMS considered the information collection requirements necessary for importers to electronically submit CFIA's inspection certificates and certificate numbers, and it was deemed not to place an additional paperwork burden on importers. No changes in the information collection requirements for the vegetable import regulations are necessary as a result of this action. Should any changes become necessary, they would be submitted to OMB for approval.

The information collection requirements for the form FV–249 (for imported pistachios) have been previously approved by OMB and assigned OMB No. 0581–0215 (Pistachios Grown in California, Arizona, and New Mexico). As noted earlier, form FV–249 is contained within the OMB information collection for the domestic pistachio marketing order but is used strictly for imported pistachios.

AMS has submitted a request to OMB to make changes to the information collection currently approved under OMB No. 0581–0215, which was last renewed in 2014, by providing for the electronic submission of form FV–249; renaming the existing form *Notification of Aflatoxin Levels* to reflect the inclusion of all aflatoxin test results; and relaxing the submission requirements so that laboratories submit the form to only USDA, eliminating the need to also submit the form to CBP and importers. There are currently nine USDA-accredited laboratories that could potentially submit all aflatoxin test results to USDA instead of only failed test results using the FV–249. As a result, the number of respondents is changing from 7 to 9, the estimated number of responses per respondent is increasing from 4 to 7, and the annual burden hours is increasing from 5.6 hours to 12.6 hours. These changes have been included in AMS's request to OMB to revise this information collection.

AMS is committed to complying with the E-Government Act, to promote the use of the Internet and other information technologies to provide increased opportunities for citizen access to Government information and services, and for other purposes.

USDA has not identified any relevant Federal rules that duplicate, overlap or conflict with this proposed rule.

A small business guide on complying with fruit, vegetable, and specialty crop marketing agreements and orders may be viewed at: *http://www.ams.usda.gov/rules-regulations/moa/small-businesses.* Any questions about the compliance guide should be sent to Rick Lower at the previously mentioned address in the **FOR FURTHER INFORMATION CONTACT** section.

A 30-day comment period is provided to allow interested persons to respond to this proposal. Thirty days is deemed appropriate because (1) the import industry is fully aware of ITDS and its goal to streamline and automate paper-based processes and has attended annual ITDS Trade Support Network plenary sessions conducted by the U.S. government over the past few years; (2) USDA and USDA-accredited laboratories are already voluntarily providing all imported pistachio aflatoxin test results to USDA; and (3) CPB is requiring the timely update of import and export regulations to meet the ITDS electronic data submission requirement. All written comments timely received will be considered before a final determination is made on this matter.

List of Subjects

7 CFR Part 944

Avocados, Food grades and standards, Grapefruit, Grapes, Imports, Kiwifruit, Olives, Oranges.

7 CFR Part 980

Food grades and standards, Imports, Marketing agreements, Onions, Potatoes, Tomatoes.

7 CFR Part 999

Dates, Filberts, Food grades and standards, Imports, Nuts, Pistachios, Prunes, Raisins, Reporting and recordkeeping requirements, Walnuts.

For the reasons set forth in the preamble, 7 CFR parts 944, 980, and 999 are proposed to be amended as follows:

■ 1. The authority citation for 7 CFR parts 944, 980, and 999 continues to read as follows:

Authority: 7 U.S.C. 601–674.

PART 944—FRUITS; IMPORT REGULATIONS

■ 2. Revise § 944.400 to read as follows:

§ 944.400 Designated inspection services and procedure for obtaining inspection and certification of imported avocados, grapefruit, kiwifruit, oranges, prune variety plums (fresh prunes), and table grapes regulated under section 8e of the Agricultural Marketing Agreement Act of 1937, as amended.

(a) The Federal or Federal-State Inspection Service, Specialty Crops Program, Agricultural Marketing Service, United States Department of Agriculture is hereby designated as the governmental inspection service for the purpose of certifying the grade, size, quality, and maturity of avocados, grapefruit, oranges, prune variety plums (fresh prunes), and table grapes that are imported into the United States. Agriculture and Agri-Food Canada is also designated as a governmental inspection service for the purpose of certifying grade, size, quality and maturity of prune variety plums (fresh prunes) only. Inspection by the Federal or Federal-State Inspection Service or the Agriculture and Agri-Food Canada, with appropriate evidence thereof in the form of an official inspection certificate, issued by the respective services, applicable to the particular shipment of the specified fruit, is required on all imports. Inspection and certification by the Federal or Federal-State Inspection Service will be available upon application in accordance with the Regulations Governing Inspection, Certification and Standards for Fresh Fruits, Vegetables, and Other Products (7 CFR part 51). For further information

about Federal or Federal-State inspection services, contact Specialty Crops Inspection Division, Specialty Crops Program, AMS, USDA, 1400 Independence Avenue SW., STOP 0240, Washington, DC 20250–0237; telephone (202) 720–5870; fax (202) 720–0393.

* * * * *

■ 3. In § 944.401, revise paragraphs (a)(5) and (c) to read as follows:

§ 944.401 Olive Regulation 1.

(a) * * *

(5) *USDA Inspector* means an inspector of the Specialty Crops Inspection Division, Specialty Crops Program, Agricultural Marketing Service, U.S. Department of Agriculture, or any other duly authorized employee of the Department.

* * * * *

(c) The Specialty Crops Inspection Division, Specialty Crops Program, Agricultural Marketing Service, U.S. Department of Agriculture, is hereby designated as the governmental inspection service for the purpose of certifying the grade and size of processed olives from imported bulk lots for use in canned ripe olives and the grade and size of imported canned ripe olives. Inspection by said inspection service with appropriate evidence thereof in the form of an official inspection certificate, issued by the service and applicable to the particular lot of olives, is required. With respect to imported bulk olives, inspection and certification shall be completed prior to use as packaged ripe olives. With respect to canned ripe olives, inspection and certification shall be completed prior to importation. Any lot of olives which fails to meet the import requirements and is not being imported for purposes of contribution to a charitable organization or processing into oil may be exported or disposed of under the supervision of the Specialty Crops Inspection Division, Specialty Crops Program, AMS, USDA, with the cost of certifying the disposal borne by the importer. Such inspection and certification services will be available, upon application, in accordance with the applicable regulations governing the inspection and certification of Processed Fruits and Vegetables, Processed Products Thereof, and Certain Other Processed Food Products (part 52 of this title). * For questions about inspection services or for further assistance, contact: Specialty Crops Inspection Division, Specialty Crops Program, AMS, USDA, 1400 Independence Avenue SW, Room 1536–S, STOP 0240, Washington, DC 20250–0237; telephone (202) 720–5870; fax (202) 720–0393.

* * * * *

PART 980—VEGETABLES; IMPORT REGULATIONS

■ 4. In § 980.1, revise paragraphs (f), (g)(1)(i), and (g)(1)(ii) to read as follows:

§ 980.1 Import regulations; Irish potatoes.

* * * * *

(f) *Designation of governmental inspection services.* The Federal or Federal-State Inspection Service, Specialty Crops Program, Agricultural Marketing Service, U.S. Department of Agriculture, and the Food of Plant Origin Division, Plant Products Directorate, Canadian Food Inspection Agency, are hereby designated as governmental inspection services for the purpose of certifying the grade, size, quality, and maturity of Irish potatoes that are imported, or to be imported, into the United States under the provisions of § 608e of the Act.

(g) * * *

(1)(i) Inspection and certification by the Federal or Federal-State Inspection Service will be available and performed in accordance with the rules and regulations governing certification of fresh fruits, vegetables, and other products (part 51 of this title), and each lot shall be made available and accessible for inspection as provided therein. Cost of inspection and certification shall be borne by the applicant. For questions about inspection services or for further assistance, contact: Specialty Crops Inspection Division, Specialty Crops Program, AMS, USDA, 1400 Independence Avenue SW., Room 1536–S, STOP 0240, Washington, DC 20250–0237; telephone (202) 720–5870; fax (202) 720–0393.

(ii) If certification is provided by a designated governmental inspection service other than the Federal or Federal-State Inspection Service, in accordance with 980.1(f), an importer shall electronically transmit to USDA, prior to entry, the certificate number and an electronic image of the certificate using the U.S. Customs and Border Protection's Automated Commercial Environment system. If this information is not provided electronically prior to entry, a paper copy of the certificate must accompany the shipment at the time of entry, and a copy of the certificate must be submitted by email, mail, or fax to the Marketing Order and Agreement Division, Specialty Crops Program, AMS, USDA, 1400 Independence Avenue SW., STOP 0237, Washington, DC 20250–0237; telephone (202) 720–2491; email *ComplianceInfo@ams.usda.gov;* or fax (202) 720–5698.

* * * * *

■ 5. In § 980.117, revise paragraphs (e), (f)(2), and (f)(3) to read as follows:

§ 980.117 Import regulations; onions.

* * * * *

(e) *Designation of governmental inspection service.* The Federal or Federal-State Inspection Service, Specialty Crops Program, Agricultural Marketing Service, U.S. Department of Agriculture, and the Food of Plant Origin Division, Plant Products Directorate, Canadian Food Inspection Agency, are hereby designated as governmental inspection services for the purpose of certifying the grade, size, quality, and maturity of onions that are imported, or to be imported, into the United States under the provisions of section 8e of the Act.

(f) * * *

(2) Inspection and certification by the Federal or Federal-State Inspection Service will be available and performed in accordance with the rules and regulations governing certification of fresh fruits, vegetables and other products (7 CFR part 51). Each lot shall be made available and accessible for inspection as provided therein. Cost of inspection and certification shall be borne by the applicant. For questions about inspection services or for further assistance, contact: Specialty Crops Inspection Division, Specialty Crops Program, AMS, USDA, 1400 Independence Avenue SW, Room 1536–S, STOP 0240, Washington, DC 20250–0237; telephone (202) 720–5870; fax (202) 720–0393.

(3) If certification is provided by a designated governmental inspection service other than the Federal or Federal-State Inspection Service, in accordance with 980.117(e), an importer shall electronically transmit to USDA, prior to entry, the certificate number and an electronic image of the certificate using the U.S. Customs and Border Protection's Automated Commercial Environment system. If this information is not provided electronically prior to entry, a paper copy of the certificate must accompany the shipment at the time of entry, and a copy of the certificate must be submitted by email, mail, or fax to the Marketing Order and Agreement Division, Specialty Crops Program, AMS, USDA, 1400 Independence Avenue SW., STOP 0237, Washington, DC 20250–0237; telephone (202) 720–2491; email *ComplianceInfo@ams.usda.gov;* or fax (202) 720–5698.

* * * * *

■ 6. In § 980.212, revise paragraphs (e), (f)(2), and (f)(3) to read as follows:

§ 980.212 Import regulations; tomatoes.

* * * * *

(e) *Designation of governmental inspection service.* The Federal or Federal-State Inspection Service, Specialty Crops Program, Agricultural Marketing Service, U.S. Department of Agriculture, and the Food of Plant Origin Division, Plant Products Directorate, Canadian Food Inspection Agency, are hereby designated as governmental inspection services for the purpose of certifying the grade, size, quality, and maturity of tomatoes that are imported, or to be imported, into the United States under the provisions of section 8e of the Act.

(f) * * *

(2) Inspection and certification by the Federal or Federal-State Inspection Service will be available and performed in accordance with the rules and regulations governing certification of fresh fruits, vegetables and other products (7 CFR part 51). Each lot shall be made available and accessible for inspection as provided therein. Cost of inspection and certification shall be borne by the applicant. For questions about inspection services or for further assistance, contact: Specialty Crops Inspection Division, Specialty Crops Program, AMS, USDA, 1400 Independence Avenue SW., Room 1536–S, STOP 0240, Washington, DC 20250–0237; telephone (202) 720–5870; fax (202) 720–0393.

(3) If certification is provided by a designated governmental inspection service other than the Federal or Federal-State Inspection Service, in accordance with 980.212(e), an importer shall electronically transmit to USDA, prior to entry, the certificate number and an electronic image of the certificate using the U.S. Customs and Border Protection's Automated Commercial Environment system. If this information is not provided electronically prior to entry, a paper copy of the certificate must accompany the shipment at the time of entry, and a copy of the certificate must be submitted by email, mail, or fax to the Marketing Order and Agreement Division, Specialty Crops Program, AMS, USDA, 1400 Independence Avenue SW., STOP 0237, Washington, DC 20250–0237; telephone (202) 720–2491; email *ComplianceInfo@ams.usda.gov;* or fax (202) 720–5698.

* * * * *

PART 999—SPECIALTY CROPS; IMPORT REGULATIONS

§ 999.100 [Amended].

■ 7. In § 999.100, amend paragraph (c)(4) by removing the last sentence.

■ 8. In § 999.300, revise paragraph (c)(3) to read as follows:

§ 999.300 Regulation governing importation of raisins.

* * * * *

(c) * * *

(3) Whenever raisins are offered for inspection, the applicant shall furnish any labor and pay any costs incurred in moving and opening containers as may be necessary for proper sampling and inspection. The applicant shall also furnish the USDA inspector the entry number and such other identifying information for each lot as the inspector may request.

* * * * *

■ 9. In § 999.400, revise paragraph (c)(2) to read as follows:

§ 999.400 Regulation governing the importation of filberts.

* * * * *

(c) * * *

(2) *Inspection.* Inspection shall be performed by USDA inspectors in accordance with the Regulations Governing the Inspection and Certification of Fresh Fruits and Vegetables and Related Products (7 CFR part 51). The cost of each such inspection and related certification shall be borne by the applicant. Whenever filberts are offered for inspection, the applicant shall furnish any labor and pay any costs incurred in moving and opening containers as may be necessary for proper sampling and inspection. The applicant shall also furnish the USDA inspector the entry number and such other identifying information for each lot as the inspector may request. Inspection must be completed prior to the importation of filberts.

* * * * *

■ 10. Amend § 999.600 by:

■ a. Revising paragraphs (e)(2) and (e)(3);

■ b. Revising paragraph (g);

■ c. Redesignating paragraph (h)(1) as (h) and revising newly redesignated paragraph (h); and

■ d. Removing paragraph (h)(2).

The revisions to read as follows:

§ 999.600 Regulation governing the importation of pistachios.

* * * * *

(e) * * *

(2) Lots that require a single test sample will be certified as ''negative'' on the aflatoxin inspection certificate if the sample has an aflatoxin level at or below 15 ppb. If the aflatoxin level is above 15 ppb, the lot fails. The laboratory shall electronically submit the results to USDA (Form FV–249) as described in paragraph (h) of this section.

(3) Lots that require two test samples will be certified as ''negative'' on the aflatoxin inspection certificate if Test Sample #1 has an aflatoxin level at or below 10 ppb. If the aflatoxin level of Test Sample #1 is above 20 ppb, the lot fails and the laboratory shall electronically submit the results to USDA (Form FV–249) as described in paragraph (h) of this section. If the aflatoxin level of Test Sample #1 is above 10 ppb and at or below 20 ppb, the laboratory may, at the importer's discretion, analyze Test Sample #2 and average the test results of Test Samples #1 and #2. Alternately, the importer may elect to withdraw the lot from testing, rework the lot, and resubmit it for testing after reworking. If the importer directs the laboratory to proceed with the analysis of Test Sample #2, a lot will be certified as negative to aflatoxin and the laboratory shall issue an aflatoxin inspection certificate if the averaged result of Test Samples #1 and #2 is at or below 15 ppb. If the average aflatoxin level of Test Samples #1 and #2 is above 15 ppb, the lot fails. The laboratory shall electronically submit the results to USDA (Form FV–249) as described in paragraph (h) of this section.

* * * * *

(g) *Failed lots/rework procedure.* Any lot or portion thereof that fails to meet the import requirements prior to or after reconditioning may be exported, sold for non-human consumption, or disposed of under the supervision the Federal or Federal-State Inspection Programs, with the costs of certifying the disposal of such lot paid by the importer.

(1) *Inshell rework procedure for aflatoxin.* If inshell rework is selected as a remedy to meet the aflatoxin requirements of this part, then 100 percent of the product within that lot shall be removed from the bulk and/or retail packaging containers and reworked to remove the portion of the lot that caused the failure. Reworking shall consist of mechanical, electronic, or manual procedures normally used in the handling of pistachios. The reworked lot shall be sampled and tested for aflatoxin as specified in paragraphs (d) and (e) of this section, except that the lot sample size and the test sample size shall be doubled. If, after the lot has been reworked and tested, it fails the aflatoxin test for a second time, the lot may be shelled and the kernels reworked, sampled, and tested in the manner specified for an original lot of kernels, or the failed lot may be exported, used for non-human consumption, or otherwise disposed of.

(2) *Kernel rework procedure for aflatoxin.* If pistachio kernel rework is selected as a remedy to meet the aflatoxin requirements of this part, then 100 percent of the product within that lot shall be removed from the bulk and/or retail packaging containers and reworked to remove the portion of the lot that caused the failure. Reworking shall consist of mechanical, electronic, or manual procedures normally used in the handling of pistachios. The reworked lot shall be sampled and tested for aflatoxin as specified in paragraphs (d) and (e) of this section.

(3) *Failed lot reporting.* If a lot fails to meet the aflatoxin requirements of this part, the testing laboratory shall electronically submit the results to USDA (Form FV–249) as described in paragraph (h) of this section within 10 working days of the test failure. This information must be submitted each time a lot fails aflatoxin testing.

(h) *Reports and Recordkeeping. Form FV–249, Notification of Aflatoxin Levels.* Each USDA or USDA-accredited laboratory shall notify the Marketing Order and Agreement Division, Specialty Crops Program, AMS, USDA of all aflatoxin test results for all lots by electronically submitting this form within 10 days of testing.

* * * * *

Dated: November 29, 2016.

Elanor Starmer,

Administrator, Agricultural Marketing Service.

[FR Doc. 2016–29016 Filed 12–5–16; 8:45 am]

BILLING CODE P

DEPARTMENT OF TRANSPORTATION

Federal Aviation Administration

14 CFR Part 71

[Docket No. FAA–2016–9320; Airspace Docket No. 15–AWP–2]

Proposed Establishment of Class E Airspace, Weed, CA

AGENCY: Federal Aviation Administration (FAA), DOT.

ACTION: Notice of proposed rulemaking (NPRM).

SUMMARY: This action proposes to establish Class E airspace extending upward from 700 feet above the surface at Weed Airport, Weed, CA, to support the development of Instrument Flight Rules (IFR) operations under standard instrument approach and departure procedures at the airport, and for the safety and management of IFR operations within the National Airspace System.

DATES: Comments must be received on or before January 20, 2017.

ADDRESSES: Send comments on this proposal to the U.S. Department of Transportation, Docket Operations, 1200 New Jersey Avenue SE., West Building Ground Floor, Room W12–140, Washington, DC 20590; telephone: 1–800–647–5527, or (202) 366–9826. You must identify FAA Docket No. FAA–2016–9320; Airspace Docket No. 15–AWP–2, at the beginning of your comments. You may also submit comments through the Internet at *http://www.regulations.gov.* You may review the public docket containing the proposal, any comments received, and any final disposition in person in the Dockets Office between 9:00 a.m. and 5:00 p.m., Monday through Friday, except federal holidays.

FAA Order 7400.11A, Airspace Designations and Reporting Points, and subsequent amendments can be viewed online at *http://www.faa.gov/air_traffic/publications/.* For further information, you can contact the Airspace Policy Group, Federal Aviation Administration, 800 Independence Avenue SW, Washington, DC, 20591; telephone: 202–267–8783. The Order is also available for inspection at the National Archives and Records Administration (NARA). For information on the availability of FAA Order 7400.11A at NARA, call 202–741–6030, or go to *http://www.archives.gov/federal_register/code_of_federal-regulations/ibr_locations.html.*

FAA Order 7400.11, Airspace Designations and Reporting Points, is published yearly and effective on September 15.

FOR FURTHER INFORMATION CONTACT: Tom Clark, Federal Aviation Administration, Operations Support Group, Western Service Center, 1601 Lind Avenue SW., Renton, WA 98057; telephone (425) 203–4511.

SUPPLEMENTARY INFORMATION:

Authority for This Rulemaking

The FAA's authority to issue rules regarding aviation safety is found in Title 49 of the United States Code. Subtitle I, Section 106 describes the authority of the FAA Administrator. Subtitle VII, Aviation Programs, describes in more detail the scope of the agency's authority. This rulemaking is promulgated under the authority described in Subtitle VII, Part, A, Subpart I, Section 40103. Under that section, the FAA is charged with prescribing regulations to assign the use of airspace necessary to ensure the safety of aircraft and the efficient use of airspace. This regulation is within the scope of that authority as it would establish controlled airspace at Weed Airport, Weed, CA.

Comments Invited

Interested parties are invited to participate in this proposed rulemaking by submitting such written data, views, or arguments, as they may desire. Comments that provide the factual basis supporting the views and suggestions presented are particularly helpful in developing reasoned regulatory decisions on the proposal. Comments are specifically invited on the overall regulatory, aeronautical, economic, environmental, and energy-related aspects of the proposal. Communications should identify both docket numbers and be submitted in triplicate to the address listed above. Persons wishing the FAA to acknowledge receipt of their comments on this notice must submit with those comments a self-addressed, stamped postcard on which the following statement is made: ''Comments to Docket No. FAA–2016–9320/Airspace Docket No. 15–AWP–2.'' The postcard will be date/time stamped and returned to the commenter.

All communications received before the specified closing date for comments will be considered before taking action on the proposed rule. The proposal contained in this notice may be changed in light of the comments received. A report summarizing each substantive public contact with FAA personnel concerned with this rulemaking will be filed in the docket.

Availability of NPRMs

An electronic copy of this document may be downloaded through the Internet at *http://www.regulations.gov.* Recently published rulemaking documents can also be accessed through the FAA's Web page at *http://www.faa.gov/air_traffic/publications/airspace_amendments/.*

You may review the public docket containing the proposal, any comments received, and any final disposition in person in the Dockets Office (see the **ADDRESSES** section for the address and phone number) between 9:00 a.m. and 5:00 p.m., Monday through Friday, except federal holidays. An informal docket may also be examined during normal business hours at the Northwest Mountain Regional Office of the Federal Aviation Administration, Air Traffic Organization, Western Service Center, Operations Support Group, 1601 Lind Avenue SW., Renton, WA 98057.

Availability and Summary of Documents Proposed for Incorporation by Reference

This document proposes to amend FAA Order 7400.11A, Airspace Designations and Reporting Points, dated August 3, 2016, and effective September 15, 2016. FAA Order 7400.11A is publicly available as listed in the **ADDRESSES** section of this document. FAA Order 7400.11A lists Class A, B, C, D, and E airspace areas, air traffic service routes, and reporting points.

The Proposal

The FAA is proposing an amendment to Title 14 Code of Federal Regulations (14 CFR) Part 71 by establishing Class E airspace extending upward from 700 feet above the surface at Weed Airport, Weed, CA. This airspace is necessary to support the development of IFR operations in standard instrument approach and departure procedures at the airport. Class E airspace would be established within a 4.3-mile radius of the airport, with a segment extending from the 4.3-mile radius to 6 miles north of the airport.

Class E airspace designations are published in paragraph 6005 of FAA Order 7400.11A, dated August 3, 2016, and effective September 15, 2016, which is incorporated by reference in 14 CFR 71.1. The Class E airspace designations listed in this document will be published subsequently in the Order.

Regulatory Notices and Analyses

The FAA has determined that this regulation only involves an established body of technical regulations for which frequent and routine amendments are necessary to keep them operationally current, is non-controversial and unlikely to result in adverse or negative comments. It, therefore: (1) Is not a ''significant regulatory action'' under Executive Order 12866; (2) is not a ''significant rule'' under DOT Regulatory Policies and Procedures (44 FR 11034; February 26, 1979); and (3) does not warrant preparation of a regulatory evaluation as the anticipated impact is so minimal. Since this is a routine matter that will only affect air traffic procedures and air navigation, it is certified that this rule, when promulgated, would not have a significant economic impact on a substantial number of small entities under the criteria of the Regulatory Flexibility Act.

Environmental Review

This proposal will be subject to an environmental analysis in accordance with FAA Order 1050.1F, ''Environmental Impacts: Policies and Procedures'' prior to any FAA final regulatory action.

List of Subjects in 14 CFR Part 71

Airspace, Incorporation by reference, Navigation (air).

The Proposed Amendment

Accordingly, pursuant to the authority delegated to me, the Federal Aviation Administration proposes to amend 14 CFR part 71 as follows:

PART 71—DESIGNATION OF CLASS A, B, C, D, AND E AIRSPACE AREAS; AIR TRAFFIC SERVICE ROUTES; AND REPORTING POINTS

■ 1. The authority citation for 14 CFR part 71 continues to read as follows:

Authority: 49 U.S.C. 106(f), 106(g), 40103, 40113, 40120; E.O. 10854, 24 FR 9565, 3 CFR, 1959–1963 Comp., p. 389.

§ 71.1 [Amended]

■ 2. The incorporation by reference in 14 CFR 71.1 of FAA Order 7400.11A, Airspace Designations and Reporting Points, dated August 3, 2016, and effective September 15, 2016, is amended as follows:

Paragraph 6005 Class E Airspace Areas Extending Upward From 700 Feet or More Above the Surface of the Earth.

* * * * *

AWP CA E5 Weed, CA [New]

Weed Airport, CA

(Lat. 41°28′51″ N., long. 122°27′16″ W.)

That airspace extending upward from 700 feet above the surface within a 4.3-mile radius of Weed Airport, and within 2 miles each side of the 348° bearing from the airport 4.3-mile radius to 6 miles north of the airport.

Issued in Seattle, Washington, on November 21, 2016.

Tracey Johnson,

Manager, Operations Support Group, Western Service Center.

[FR Doc. 2016–29138 Filed 12–5–16; 8:45 am]

BILLING CODE 4910–13–P

ENVIRONMENTAL PROTECTION AGENCY

40 CFR Part 52

[EPA–R09–OAR–2014–0812; FRL–9956–11–Region 9]

Approval of Air Quality State Implementation Plans; Nevada; Infrastructure Requirements To Address Interstate Transport for the 2008 Ozone NAAQS

AGENCY: Environmental Protection Agency (EPA).

ACTION: Proposed rule.

SUMMARY: The Environmental Protection Agency (EPA) is proposing to approve a State Implementation Plan (SIP) revision submitted by the Nevada Division of Environmental Protection on April 10, 2013, and supplemented on March 25, 2016. The SIP revision and supplement address the interstate transport requirements of Clean Air Act (CAA or ''Act'') section 110(a)(2)(D)(i)(I) with respect to the 2008 ozone (O_3) national ambient air quality standard (NAAQS). The EPA's rationale for proposing to approve Nevada's April 10, 2013 SIP revision and March 25, 2016 supplement is described in this notice.

DATES: Written comments must be received on or before January 5, 2017.

ADDRESSES: Submit your comments, identified by Docket ID No. EPA–R09–OAR–2014–0812 at *http://www.regulations.gov,* or via email to *kelly.thomasp@epa.gov.* For comments submitted at *Regulations.gov*, follow the online instructions for submitting comments. Once submitted, comments cannot be edited or removed from *Regulations.gov.* For either manner of submission, the EPA may publish any comment received to its public docket. Do not submit electronically any information you consider to be Confidential Business Information (CBI) or other information whose disclosure is restricted by statute. Multimedia submissions (audio, video, etc.) must be accompanied by a written comment. The written comment is considered the official comment and should include discussion of all points you wish to make. The EPA will generally not consider comments or comment contents located outside of the primary submission (*i.e.* on the web, cloud, or other file sharing system). For additional submission methods, please contact the person identified in the **FOR FURTHER INFORMATION CONTACT** section. For the full EPA public comment policy, information about CBI or multimedia submissions, and general guidance on making effective comments, please visit *http://www2.epa.gov/dockets/commenting-epa-dockets.*

FOR FURTHER INFORMATION CONTACT: Tom Kelly, EPA Region IX, (415) 972–3856, *kelly.thomasp@epa.gov.*

SUPPLEMENTARY INFORMATION: Throughout this document, the terms ''we,'' ''us,'' and ''our'' refer to the EPA.

Table of Contents

I. Background
II. State Submittals
III. The EPA's Assessment
IV. Proposed Action
V. Statutory and Executive Order Reviews

I. Background

CAA sections 110(a)(1) and (2) require states to address structural SIP requirements to implement, maintain and enforce the NAAQS no later than three years after the promulgation of a new or revised standard. Section 110(a)(2) outlines the specific requirements that each state is required to address in this SIP submission that collectively constitute the ''infrastructure'' of a state's air quality management program. SIP submittals that address these requirements are referred to as ''infrastructure SIPs'' (I–SIP). In particular, CAA section 110(a)(2)(D)(i)(I) requires that each SIP for a new or revised NAAQS contain adequate provisions to prohibit any source or other type of emissions activity within the state from emitting air pollutants that will ''contribute significantly to nonattainment'' (prong 1) or ''interfere with maintenance'' (prong 2) of the applicable air quality standard in any other state. This action addresses the section 110(a)(2)(D)(i)(I) requirements of prongs 1 and 2 for Nevada's I–SIP submissions.

On March 27, 2008, the EPA issued a revised NAAQS for ozone.[1] This action triggered a requirement for states to submit an I–SIP to address the applicable requirements of section 110(a)(2) within three years of issuance of the revised NAAQS.

On September 13, 2013, the EPA issued ''Guidance on Infrastructure State Implementation Plan (SIP) Elements under Clean Air Act Sections 110(a)(1) and 110(a)(2),'' which provides ''advice on the development of infrastructure SIPs for the 2008 ozone NAAQS . . . as well as infrastructure SIPs for new or revised NAAQS promulgated in the future.'' [2] The EPA followed that guidance with an additional memo specific to 110(a)(2)(D)(i)(I) (prongs 1 and 2) requirements for the 2008 O_3 standard on January 22, 2015 entitled, ''Information on the Interstate Transport ''Good Neighbor'' Provision for the 2008 Ozone NAAQS Under CAA Section 110(a)(2)(D)(i)(I)'' (2015 Transport Memo).[3] While this memo did not provide specific guidance to western states regarding how to address the interstate transport requirements of section 110(a)(2)(D)(i)(I), it did contain preliminary modeling information for western states. This 2015 Transport Memo, following the approach used in the EPA's prior Cross-State Air Pollution Rule (CSAPR),[4] provided data identifying ozone monitoring sites that were projected to be in nonattainment or have maintenance problems for the 2008 ozone NAAQS in 2018. Also, the EPA provided the projected contribution estimates from 2018 anthropogenic oxides of nitrogen (NO_X) and volatile organic compound (VOC) emissions in each state to ozone concentrations at each of the projected sites.

On August 4, 2015, the EPA published a **Federal Register** Notice entitled, ''Notice of Availability of the Environmental Protection Agency's Updated Ozone Transport Modeling Data for the 2008 Ozone NAAQS.'' [5] This Notice of Data Availability (NODA) was an update of the preliminary air quality modeling data that was released January 22, 2015, and was also used to support the proposed Cross-State Air Pollution Rule Update for the 2008 Ozone NAAQS (''CSAPR Update''), which proposed to address interstate transport obligations in the eastern United States.[6] The EPA's modeling was updated a second time with the release of the final Cross-State Air Pollution Rule Update for the 2008 Ozone NAAQS (''CSAPR Update'').[7] The CSAPR Update addresses CAA section 110(a)(2)(D)(i)(I) requirements with respect to the 2008 ozone NAAQS in the eastern United States.

The CSAPR Update modeling provided data used to identify ozone monitoring sites that are projected to be nonattainment or have maintenance problems (following the CSAPR approach) for the 2008 ozone NAAQS in 2017.[8] The modeling further provided the projected ozone contribution estimates from 2017 anthropogenic NO_X and VOC emissions in each state to ozone concentrations at each of the projected monitoring sites. While the CSAPR Update did not finalize any determinations regarding upwind state contributions to air quality problems in the 11 western states,[9] the supportive modeling included data on potential interstate transport impacts among 11 western states, including Nevada. In this action, we are utilizing these data to evaluate the state's submittals and any interstate transport obligations under section 110(a)(2)(D)(i)(I).

The EPA is obligated, pursuant to a judgment by the District of Nevada in *Nevada* vs. *McCarthy*, to take final action by February 13, 2017 on section 110(a)(2)(D)(i)(I) prongs 1 and 2 of Nevada's April 2013 SIP revision and March 25, 2016 supplement.[10] We previously took action on the other I–SIP elements covered by Nevada's submittals for the 2008 ozone NAAQS on November 3, 2015.[11]

II. State Submittals

On April 10, 2013, the Nevada Division of Environmental Protection (NDEP) submitted its 2008 ozone NAAQS I–SIP (2013 submittal). Nevada's 2013 Submittal quoted the decision from the United States Court of Appeals for the District of Columbia Circuit (D.C. Circuit) in *EME Homer City Generation, L.P.* v. *EPA,* 696 F.3d 7 (2012), which instructed the EPA to quantify each state's significant contribution to air quality problems in other states before requiring states to submit SIPs addressing the interstate transport requirements with respect to such pollution. Nevada's submittal also cited an EPA memorandum that explained, in light of the D.C. Circuit decision, ''EPA cannot deem a SIP deficient for failing to meet the good neighbor provision, if the EPA has not quantified the state's obligation.'' [12] The state concluded that, ''Because US EPA has not informed Nevada of its contribution to any ozone NAAQS attainment problem in downwind states, the NDEP concludes that it is not obligated to address this requirement at this time.'' Subsequent to Nevada's submission, however, the U.S. Supreme Court reversed the D.C. Circuit with respect to states' obligations to submit a SIP addressing these requirements. *See*

[1] National Ambient Air Quality Standards for Ozone; Final Rule, 73 FR 16436 (March 27, 2008).

[2] Memorandum from Stephen D. Page, Director, Office of Air Quality Planning and Standards, to Regional Air Division Directors, Regions 1–10 (September 13, 2013).

[3] Memorandum from Stephen D. Page, Director, Office of Air Quality Planning and Standards, to Regional Air Division Directors, Regions 1–10 (January 22, 2015).

[4] Cross-State Air Pollution Rule, 76 FR 48208 (Aug. 8, 2011).

[5] Notice of Availability of the Environmental Protection Agency's Updated Ozone Transport Modeling Data for the 2008 Ozone National Ambient Air Quality Standard (NAAQS), 80 FR 46271 (August 4, 2015).

[6] Cross-State Air Pollution Rule Update for the 2008 Ozone NAAQS, Proposed Rule, 80 FR 75706 (December 3, 2015).

[7] Cross-State Air Pollution Rule Update for the 2008 Ozone NAAQS, Final Rule, 81 FR 74504 (October 25, 2016).

[8] The EPA adopted 2017 as the analytic year for the updated ozone modeling information. See 80 FR 46273.

[9] For purposes of the CSAPR Update, the western U.S. (or the West) consists of the 11 western contiguous states of Arizona, California, Colorado, Idaho, Montana, Nevada, New Mexico, Oregon, Utah, Washington, and Wyoming.

[10] See Judgment, *Nevada* v. *McCarthy*, Case 3:15–cv–00396–HDM–WGC (D. Nev. June 22, 2016).

[11] Partial Approval and Partial Disapproval of Air Quality State Implementation Plans; Nevada; Infrastructure Requirements for Ozone, NO_2 and SO_2, 80 FR 67652.

[12] Memorandum from Gina McCarthy, Assistant Administrator of the EPA, to Regional Air Division Directors, Regions 1–10 (November 19, 2012).

EPA v. *EME Homer City Generation,* 134 S. Ct. 1584 (2014).

Despite the NDEP's conclusion with respect to the state's obligation to submit a SIP addressing the interstate transport requirements, the 2013 Submittal also included information intended to demonstrate that emissions from the state do not contribute to nonattainment or interfere with maintenance of the 2008 ozone NAAQS in other states. In particular, the 2013 Submittal referenced the EPA's proposed CAIR rule and modeling, which excluded Western States, including Nevada, from its analysis. Finally, the 2013 Submittal discussed prevailing wind directions and nearby nonattainment areas in Phoenix, Arizona, and throughout California, concluding ''NDEP finds it reasonable to conclude that the Phoenix nonattainment area is not significantly influenced by winds from Nevada.''

Subsequent to the Supreme Court's vacatur of the D.C. Circuit's *EME Homer City* decision, on March 25, 2016, Nevada supplemented the Interstate Transport portions of its 2013 I–SIP submittal for the 2008 ozone NAAQS (2016 Supplement). The 2016 Supplement acknowledges and addresses the EPA modeling released in the 2015 Transport Memo which was updated by the August 2015 NODA. The 2016 Supplement acknowledges that the EPA's modeling showed that emissions from Nevada impact air quality in California and provides multiple reasons to support its conclusion that Nevada nonetheless does not significantly contribute to nonattainment or interfere with maintenance of the 2008 ozone NAAQS in any downwind states.[13] For example, the 2016 Supplement states that Nevada contributes slightly more than 1% of 2008 Ozone NAAQS at monitors in Madera and Fresno, but notes that this contribution is less than 1% of the projected 2017 design values for those monitors. It notes that even if the interstate transport contribution were eliminated, these monitors would not attain the 2008 ozone standard. The monitors are located within an extreme nonattainment area that has until 2031 to attain the 2008 Ozone NAAQS. The 2016 Supplement contends that the one percent screening threshold used in CSAPR to identify upwind states linked to downwind ozone problems is not appropriate in cases where the total contribution of upwind states to a downwind air quality problem are minimal and where the downwind design values are significantly higher than the NAAQS, particularly in light of high background concentrations.

The 2016 Supplement discusses current emissions of ozone precursors, controls in place for current sources, and the planned shutdown of several coal-fired electrical generating units. It briefly discusses VOC emissions, explaining that these are overwhelmingly from biogenic sources, which are uncontrollable; from mobile sources, which are federally regulated; and from fires, which are also uncontrollable. For NO_X emissions sources, the 2016 Supplement relies on the 2011 National Emissions Inventory, and notes that on-road and off-road mobile sources comprise 90% of mobile source NO_X emissions, which in turn comprise 75% of state-wide NO_X emissions. As mentioned for VOC emissions, on-road and off-road mobile sources are primarily regulated at the federal level, though Nevada has several programs that control mobile source emissions, including the Nevada Department of Motor Vehicle annual Inspection and Maintenance program. According to the 2016 Supplement, fuel combustion is the second largest source of NO_X in Nevada, and nearly half of that source sector is comprised of the electric generation sub-sector, mostly from facilities using coal for fuel. For Nevada's three coal-fired energy generation units (EGU), the 2016 Supplement explains that the last remaining boiler at the Reid Gardner Generating Station will shut down by December 2017 while the two units at the North Valmy Generating Station are planned to shut down in 2021 and 2025. Furthermore, NO_X emissions controls at the remaining EGU facility, the TS Power Plant, include selective catalytic reduction system and low NO_X coal burners.[14] The 2016 Supplement concludes by reaffirming the 2013 submittal's conclusion that ''ozone and ozone precursor emissions from Nevada do not contribute to nonattainment or interfere with maintenance of the 2008 8-hour ozone standard in any other state.''

III. The EPA's Assessment

110(a)(2)(D)(i)(I) Prong 1 and Prong 2

The EPA proposes to approve Nevada's SIP submissions pertaining to CAA section 110(a)(2)(D)(i)(I), prongs 1 and 2, with respect to the 2008 ozone NAAQS. As explained below, the EPA's proposal is based on the state's submission and the EPA's analysis of several factors and available data.

To determine whether the CAA section 110(a)(2)(D)(i)(I), prongs 1 and 2 requirement is satisfied, the EPA first must determine whether a state's emissions will contribute significantly to nonattainment or interfere with maintenance of a NAAQS in other states. If a state is determined not to make such contribution or interfere with maintenance of the NAAQS, then the EPA can conclude that the state's SIP complies with the requirements of section 110(a)(2)(D)(i)(I). In several prior federal rulemakings interpreting section 110(a)(2)(D)(i)(I), The EPA has evaluated whether a state will significantly contribute to nonattainment or interfere with maintenance of a NAAQS by first identifying downwind receptors that are expected to have problems attaining or maintaining the NAAQS.[15] The EPA has then determined which upwind states contribute to these identified air quality problems in amounts sufficient to warrant further evaluation to determine if the state can make emission reductions to reduce its contribution. CSAPR and the CSAPR Update used a screening threshold (1% of the NAAQS) to identify such contributing upwind states warranting further review and analysis. The EPA believes contribution from an individual state equal to or above 1% of the NAAQS could be considered significant where the collective contribution of emissions from one or more upwind states is responsible for a considerable portion of the downwind air quality problem regardless of where the receptor is geographically located.[16] The EPA's air quality modeling supporting the CSAPR Update evaluated contributions from upwind states to downward receptors. The modeling information indicates that emissions from Nevada contribute amounts exceeding the 1% threshold at receptors in two projected downwind nonattainment areas, Madera County and Fresno County, California.[17]

Although The EPA's modeling indicates that emissions from Nevada contribute above the 1% threshold to two projected downwind air quality problems, the EPA examined several

[13] We have summarized the primary concerns raised in Nevada's 2016 Supplement. The complete details of Nevada's analysis can be found in the 2016 Supplement, which is contained in the docket for this action.

[14] Emission limits for the TS Power Plant are contained in Class I Air Quality Operation Permit AP4911–2502 in the docket for this action.

[15] NO_X SIP Call, Final Rule, 63 FR 57371 (October 27, 1998); Clean Air Interstate Rule (CAIR), Final Rule, 70 FR 25172 (May 12, 2005); Cross-State Air Pollution Rule (CSAPR), Final Rule, 76 FR 48208 (August 8, 2011); CSAPR Update Rule, Proposed Rule, 80 FR 75706 (Dec. 3, 2015).

[16] The EPA notes that there may be additional criteria to evaluate regarding collective contribution of transported air pollution at certain locations in the West.

[17] Data file with 2017 Ozone Contributions included in docket for this action.

factors to determine whether emissions from Nevada should be considered to significantly contribute to nonattainment or interfere with maintenance of the NAAQS at those sites, including the air quality and contribution modeling, receptor data, and the statewide measures reducing emissions of VOCs and NO_X. The EPA notes that no single piece of information is by itself dispositive of the issue for purposes of this analysis. Instead, the EPA has considered the total weight of all the evidence taken together to evaluate whether Nevada significantly contributes to nonattainment or interferes with maintenance of the 2008 ozone NAAQS in those areas.

One such factor that the EPA considers relevant to determining the nature of a projected receptor's interstate transport problem is the magnitude of ozone attributable to transport from all upwind states collectively contributing to the air quality problem. In CSAPR and the CSAPR Update Rule, the EPA used the 1% air quality threshold to identify linkages between upwind states and downwind maintenance receptors. States whose contributions to a specific receptor meet or exceed the threshold were considered to be linked to that receptor. The linked states' emissions (and available emission reductions) were then analyzed further as a second step to the EPA's contribution analysis. States whose contributions to all receptors that were below the 1% threshold did not require further evaluation to address interstate transport and we therefore determined that those states made insignificant contributions to downwind air quality. Therefore, the EPA determined that the states below the threshold do not significantly contribute to nonattainment or interfere with maintenance of the NAAQS in other states. The EPA used the 1% threshold in the East because prior analysis showed that, in general, nonattainment problems result from a combined impact of relatively small individual contributions from upwind states, along with contributions from in-state sources. The EPA has observed that a relatively large portion of the air quality problem at most ozone nonattainment and maintenance receptors in the East is the result of the collective contribution from a number of upwind states.

Specifically, the EPA found the total upwind states' contribution to ozone concentration (from linked and unlinked states) based on modeling for 2017 ranges from 17% to 68% to identified downwind air quality problems in the East, with between 4 and 11 states each contributing above 1% to the downwind air quality problem.[18] [19] Thus, irrespective of the 1% air quality threshold in the East, the EPA has found that the collective contributions from upwind states represent a large portion of the ozone concentrations at projected air quality problems. Further, in the East, the EPA found that the 1% threshold is appropriate to capture a high percentage of the total pollution transport affecting downwind receptors. By comparison, the CSAPR Update modeling information indicates the total upwind (linked or unlinked) states' contribution to ozone concentration at the projected nonattainment site in Fresno, California (Monitor ID 60190242) and Madera, California (Monitor ID 60390004), is comparatively small, with only one state contributing above 1% to the downwind air quality problem.

Nevada is the only state that contributes greater than the 1% threshold to the projected 2017 levels of the 2008 ozone NAAQS to the receptor in Fresno. The total contribution from all states to the Fresno receptor is less than 2.6% of the ozone concentration at this receptor. Nevada is also the only state that contributes greater than 1% to the projected 2017 levels of the 2008 ozone NAAQS to a receptor in Madera, and the total contribution from all states is less than 2.2% of the ozone concentration at this receptor. The EPA believes that a 2.6% and 2.2% cumulative ozone contribution from all upwind states is negligible, particularly when compared to the relatively large contributions from upwind states in the East or in certain other areas of the West. For these reasons, the EPA believes the emissions that result in transported ozone from upwind states have limited impacts on the projected air quality problems in Madera County, and Fresno County, California, and therefore these receptors should not be treated as receptors for purposes of determining the interstate transport obligations of upwind states under section 110(a)(2)(D)(i)(I).

This analysis is consistent with Nevada's determination that it would not be appropriate to determine that the state is linked to air quality problems in California. However, the EPA does not agree with the rationale provided by the state in its 2016 Supplement.[20] For example, the EPA does not agree that upwind states should not be required to reduce emissions to downwind air quality problems simply because the downwind design values are significantly higher than the NAAQS. Although upwind reductions might not bring such areas into attainment, such reductions, where otherwise warranted, may still play an important role in improving air quality in downwind states and, therefore, improving public health and welfare. Moreover, the EPA does not agree that high levels of background concentrations at a particular monitor should necessarily excuse an upwind state from reducing emissions where such emissions reductions may nonetheless improve downwind air quality. Nonattainment and/or maintenance receptors in different parts of the Country may experience differing amounts of measured ozone from background sources (that are outside of the U.S.). But in some cases, areas with high background ozone may still have a relatively large amount of ozone from the collective contribution of upwind U.S. emissions. Therefore, regardless of the level of background ozone, emissions reductions from upwind states may be an important component of solving the local nonattainment problem.

In this case, the modeling data conducted to support the CSAPR Update show that Nevada contributes either less than 1% of the NAAQS to projected air quality problems in other states, or where it contributes above 1% of the NAAQS to a projected downwind air quality problem in California, the EPA proposes to find, based on the overall weight of evidence, that these particular receptors are not significantly impacted by transported ozone from upwind states. Emissions reductions from Nevada are not necessary to address interstate transport because the total collective upwind state ozone contribution to these receptors is

[18] The stated range is based on the highest nonattainment or maintenance receptor in each area. All nonattainment and maintenance receptors had upwind contributions of well over 17%, except for some receptors in Dallas and Houston.

[19] Memo to Docket from the EPA, Air Quality Policy Division. ''Contribution Analysis of Receptors in the Updated CSAPR Proposal.'' March 10, 2016.

[20] To the extent that the 2013 Submittal relies on analysis conducted for CAIR, the EPA notes that the modeling conducted for that rulemaking did not include the western United States. The EPA's more recent modeling does consider western states. Moreover, CAIR only addressed the 1997 ozone NAAQS, and the record for CAIR therefore contains no data evaluating the impact of emissions from Nevada to other states relative to the 2008 ozone NAAQS. Finally, while the EPA suggested that 8-hour ozone nonattainment problems were ''likely'' not affected by transported pollution in the west, the EPA took no final action determining that western states do not significantly contribute to nonattainment or interfere with maintenance of the NAAQS in other states. Rather, as the 2013 Submittal notes, the EPA did not further analyze those states. 69 FR at 4581.

relatively low compared to the air quality problems typically addressed by the good neighbor provision. Additionally, Nevada has demonstrated that both VOC and NO_X emissions are decreasing and will continue to go down. The EPA therefore believes that Nevada's impact on downwind receptors in California are insignificant and will continue to remain insignificant.

IV. Proposed Action

The EPA is proposing to approve Nevada's SIP as meeting the interstate transport requirements of CAA section 110(a)(2)(D)(i)(I) prongs 1 and 2 for the 2008 ozone NAAQS. The EPA is proposing this approval based on the overall weight of evidence from information and analysis provided by Nevada, as well as the recent air quality modeling released in the EPA's August 4, 2015 NODA, and other data analysis that confirms that emissions from Nevada will not contribute significantly to nonattainment or interfere with maintenance of the 2008 ozone NAAQS in California or any other state.

V. Statutory and Executive Order Reviews

Additional information about these statutes and Executive Orders can be found at *http://www2.epa.gov/laws-regulations/laws-and-executive-orders.*

A. Executive Order 12866: Regulatory Planning and Review and Executive Order 13563: Improving Regulation and Regulatory Review

This action is not a significant regulatory action and was therefore not submitted to the Office of Management and Budget (OMB) for review.

B. Paperwork Reduction Act (PRA)

This action does not impose an information collection burden under the PRA because this action does not impose additional requirements beyond those imposed by state law.

C. Regulatory Flexibility Act (RFA)

I certify that this action will not have a significant economic impact on a substantial number of small entities under the RFA. This action will not impose any requirements on small entities beyond those imposed by state law.

D. Unfunded Mandates Reform Act (UMRA)

This action does not contain any unfunded mandate as described in UMRA, 2 U.S.C. 1531–1538, and does not significantly or uniquely affect small governments. This action does not impose additional requirements beyond those imposed by state law. Accordingly, no additional costs to State, local, or tribal governments, or to the private sector, will result from this action.

E. Executive Order 13132: Federalism

This action does not have federalism implications. It will not have substantial direct effects on the states, on the relationship between the national government and the states, or on the distribution of power and responsibilities among the various levels of government.

F. Executive Order 13175: Coordination With Indian Tribal Governments

This action does not have tribal implications, as specified in Executive Order 13175, because the SIP is not approved to apply on any Indian reservation land or in any other area where the EPA or an Indian tribe has demonstrated that a tribe has jurisdiction, and will not impose substantial direct costs on tribal governments or preempt tribal law. Thus, Executive Order 13175 does not apply to this action.

G. Executive Order 13045: Protection of Children From Environmental Health Risks and Safety Risks

The EPA interprets Executive Order 13045 as applying only to those regulatory actions that concern environmental health or safety risks that the EPA has reason to believe may disproportionately affect children, per the definition of ''covered regulatory action'' in section 2–202 of the Executive Order. This action is not subject to Executive Order 13045 because it does not impose additional requirements beyond those imposed by state law.

H. Executive Order 13211: Actions That Significantly Affect Energy Supply, Distribution, or Use

This action is not subject to Executive Order 13211, because it is not a significant regulatory action under Executive Order 12866.

I. National Technology Transfer and Advancement Act (NTTAA)

Section 12(d) of the NTTAA directs the EPA to use voluntary consensus standards in its regulatory activities unless to do so would be inconsistent with applicable law or otherwise impractical. The EPA believes that this action is not subject to the requirements of section 12(d) of the NTTAA because application of those requirements would be inconsistent with the CAA.

J. Executive Order 12898: Federal Actions To Address Environmental Justice in Minority Populations and Low-Income Population

The EPA lacks the discretionary authority to address environmental justice in this rulemaking.

List of Subjects in 40 CFR Part 52

Air pollution control, Approval and promulgation of implementation plans, Environmental protection, Incorporation by reference, Oxides of nitrogen, Ozone, and Volatile organic compounds.

Dated: November 22, 2016.

Alexis Strauss,

Acting Regional Administrator, Region IX.

[FR Doc. 2016–29252 Filed 12–5–16; 8:45 am]

BILLING CODE 6560–50–P

FEDERAL COMMUNICATIONS COMMISSION

47 CFR Part 54

[WC Docket No. 10–90; Report No. 3056]

Petition for Reconsideration of Action in Rulemaking Proceeding

AGENCY: Federal Communications Commission.

ACTION: Petition for reconsideration.

SUMMARY: A Petition for Reconsideration (Petition) has been filed in the Commission's rulemaking proceeding by Karen Brinkmann, on behalf of Alaska Communications.

DATES: Oppositions to the Petition must be filed on or before December 21, 2016. Replies to an opposition must be filed on or before January 3, 2017.

ADDRESSES: Federal Communications Commission, 445 12th Street SW., Washington, DC 20554.

FOR FURTHER INFORMATION CONTACT: Alexander Minard, Wireline Competition Bureau, phone: (202) 418–7400, TTY: (202) 418–0484 or by email: *Alexander.Minard@fcc.gov.*

SUPPLEMENTARY INFORMATION: This is a summary of the Commission's document, Report No. 3056, released November 25, 2016. The full text of the Petition is available for viewing and copying at the FCC Reference Information Center, 445 12th Street SW., Room CY–A257, Washington, DC 20554 or may be accessed online via the Commission's Electronic Comment Filing System at: *https://www.fcc.gov/ecfs/.* The Commission will not send a copy of this document pursuant to the Congressional Review Act, 5 U.S.C. 801(a)(1)(A), because this document does not have an impact on any rules of particular applicability.

Subject: Connect America Fund, FCC 16–143, published at 81 FR 83706, November 22, 2016, in WC Docket No. 10–90. This document is being published pursuant to 47 CFR 1.429(e). *See also* 47 CFR 1.4(b)(1) and 1.429(f), (g).

Number of Petitions Filed: 1.

Federal Communications Commission.

Marlene H. Dortch,

Secretary.

[FR Doc. 2016–29181 Filed 12–5–16; 8:45 am]

BILLING CODE 6712–01–P

DEPARTMENT OF COMMERCE

National Oceanic and Atmospheric Administration

50 CFR Part 648

RIN 0648–BF26

Fisheries of the Northeastern United States; Amendment 18 to the Northeast Multispecies Fishery Management Plan

AGENCY: National Marine Fisheries Service (NMFS), National Oceanic and Atmospheric Administration (NOAA), Commerce.

ACTION: Notice of availability of proposed Fishery Management Plan amendment; request for comments.

SUMMARY: The New England Fishery Management Council has submitted Amendment 18 to the Northeast Multispecies Fishery Management Plan. We are requesting comments from the public on this Amendment, which was developed to prevent excessive consolidation in the groundfish fishery, promote fleet diversity, and enhance sector management. Amendment 18 includes measures that would limit the number of permits and annual groundfish allocation that an entity could hold. This action would also remove several effort restrictions to increase operational flexibility for limited access handgear vessels.

DATES: Comments must be received on or before February 6, 2017.

ADDRESSES: You may submit comments on this document, identified by NOAA–NMFS–2015–0143, by either of the following methods:

- *Electronic Submission:* Submit all electronic public comments via the Federal e-Rulemaking Portal. Go to *www.regulations.gov/#!docketDetail;D=NOAA-NMFS-2015-0143,* click the ''Comment Now!'' icon, complete the required fields, and enter or attach your comments.
- *Mail:* Submit written comments to John K. Bullard, Regional Administrator, NMFS, Greater Atlantic Regional Fisheries Office, 55 Great Republic Drive, Gloucester, MA 01930. Mark the outside of the envelope: ''Comments on Northeast Multispecies Amendment 18.''

Instructions: Comments sent by any other method, to any other address or individual, or received after the end of the comment period, may not be considered by NMFS. All comments received are a part of the public record and will generally be posted for public viewing on *www.regulations.gov* without change. All personal identifying information (*e.g.,* name, address, etc.), confidential business information, or otherwise sensitive information submitted voluntarily by the commenter may be publicly accessible. NMFS will accept anonymous comments (enter ''N/A'' in the required fields if you wish to remain anonymous). Attachments to electronic comments will be accepted in Microsoft Word, Excel, or Adobe PDF file formats only.

Copies of Amendment 18, including its environmental impact statement, preliminary Regulatory Impact Review, and Initial Regulatory Flexibility Analysis (EIS/RIR/IRFA), are available from the New England Fishery Management Council, 50 Water Street, Newburyport, MA 01950. The EIS/RIR/IRFA is also accessible via the Internet at: *www.greateratlantic.fisheries.noaa.gov.*

FOR FURTHER INFORMATION CONTACT: William Whitmore, Fishery Policy Analyst, 978–281–9182.

SUPPLEMENTARY INFORMATION:

Background

The New England Fishery Management Council has submitted to us Amendment 18 to the Northeast Multispecies Fishery Management Plan. The Council identified four goals for Amendment 18:

1. Promote a diverse groundfish fishery, including different gear types, vessel sizes, ownership patterns, geographic locations, and levels of participation through sectors and permit banks;
2. Enhance sector management to effectively engage industry to achieve management goals and improve data quality;
3. Promote resilience and stability of fishing businesses by encouraging diversification, quota utilization, and capital investment; and
4. Prevent any individual(s), corporation(s), or other entity(ies) from acquiring or controlling excessive shares of the fishery access privileges.

Amendment 18 addresses these goals through two mechanisms. First, this action proposes to establish accumulation limits on the number of groundfish permits and the amount of Potential Sector Contribution (PSC) that an entity may hold. PSC is the proportion of total landings of a particular stock associated with each permit's fishing history. PSC also represents the allocation that an individual permit would contribute to a sector once enrolled. Second, this action proposes to remove several restrictions on limited access handgear vessels to promote participation in this small-boat fishery.

The PSC limit would restrict the amount of PSC that may be held by an entity in aggregate across all allocated stocks to an average of no more than 15.5. With 15 allocated stocks, the total PSC across all stocks held by an individual or entity must be ≤ 232.5 (an average of 15.5 per stock). An individual or entity could hold PSC for a single stock in excess of 15.5, so long as the total holdings do not exceed 232.5. Supporting analyses indicate that no one entity currently holds more than 140.4 PSC. As a result, if approved, this limit is unlikely to immediately constrain any entity.

The Amendment also includes a permit cap that limits an entity to holding no more than 5 percent of groundfish permits. An entity would be prohibited from acquiring a permit that would result in it exceeding the 5-percent cap. There are approximately 1,373 permits currently in the fishery; a 5-percent cap would limit an entity to approximately 69 permits. As of May 1, 2014, the most permits held by an entity are 55; therefore, if approved, this alternative is unlikely to immediately restrict any entities.

Amendment 18 proposes several management measures for limited access handgear vessels (Handgear A permitted vessels) to remove effort restrictions, increase operational flexibility, and encourage participation in the fishery.

First, the March 1–20 spawning-block closure would be removed for all Handgear A vessels. Fishing effort by Handgear A vessels is restricted by a small annual catch limit and vessels are subject to other spawning closures. This measure would make the regulations for Handgear A vessels more consistent with vessels fishing in sectors, which are already exempted from the 20-day spawning block.

Second, Handgear A vessels would no longer be required to carry a standard fish tote on board. This measure was initially implemented to aid in the

sorting and weighing of fish by both fishermen and enforcement personnel. However, enforcement no longer uses totes for at-sea weight and volume estimates so the requirement for vessels to carry a tote is unnecessary.

Lastly, this action would allow a sector with Handgear A vessels to request that Handgear A vessels be exempt from the requirement to use a Vessel Monitoring System. Instead, vessels would be required to declare trips through a call-in system. This measure is intended to encourage Handgear A vessels to enroll in a sector by reducing their operating expenses.

Public comments are being solicited on the Amendment through the end of the comment period stated in the **DATES** section above. A proposed rule that would implement the Amendment will be published in the **Federal Register** for public comment, as part of our evaluation of Amendment 18 under requirements of the Magnuson-Stevens Fishery Conservation Management Act. Public comments on the proposed rule must be received by the end of the comment period on Amendment 18 to be considered in the approval/disapproval decision on the Amendment. All comments received by the end of the Amendment 18 comment period, whether specifically directed to the Amendment or the proposed rule, will be considered in the approval/disapproval decision. Comments received after that day will not be considered in the approval/disapproval decision for Amendment 18. To be considered, comments must be received by the close of business on the last day of the comment period; that does not mean postmarked or otherwise transmitted by that date.

Authority: 16 U.S.C. 1801 *et seq.*

Dated: December 1, 2016.

Emily H. Menashes,

Acting Director, Office of Sustainable Fisheries, National Marine Fisheries Service.

[FR Doc. 2016–29189 Filed 12–5–16; 8:45 am]

BILLING CODE 3510–22–P

DEPARTMENT OF COMMERCE

National Oceanic and Atmospheric Administration

50 CFR Part 679

[Docket No. 161020985–6985–01]

RIN 0648–XE989

Fisheries of the Exclusive Economic Zone Off Alaska; Bering Sea and Aleutian Islands; 2017 and 2018 Harvest Specifications for Groundfish

AGENCY: National Marine Fisheries Service (NMFS), National Oceanic and Atmospheric Administration (NOAA), Commerce.

ACTION: Proposed rule; request for comments.

SUMMARY: NMFS proposes 2017 and 2018 harvest specifications, apportionments, and prohibited species catch allowances for the groundfish fisheries of the Bering Sea and Aleutian Islands (BSAI) management area. This action is necessary to establish harvest limits for groundfish during the 2017 and 2018 fishing years, and to accomplish the goals and objectives of the Fishery Management Plan for Groundfish of the Bering Sea and Aleutian Islands Management Area. The intended effect of this action is to conserve and manage the groundfish resources in the BSAI in accordance with the Magnuson-Stevens Fishery Conservation and Management Act.

DATES: Comments must be received by January 5, 2017.

ADDRESSES: You may submit comments on this document, identified by NOAA–NMFS–2016–0140, by any of the following methods:

- *Electronic Submission:* Submit all electronic public comments via the Federal e-Rulemaking Portal. Go to *www.regulations.gov/#!docketDetail;D=NOAA-NMFS-2016-0140,* click the ''Comment Now!'' icon, complete the required fields, and enter or attach your comments.
- *Mail:* Submit written comments to Glenn Merrill, Assistant Regional Administrator, Sustainable Fisheries Division, Alaska Region NMFS, Attn: Ellen Sebastian. Mail comments to P.O. Box 21668, Juneau, AK 99802–1668.

Instructions: Comments sent by any other method, to any other address or individual, or received after the end of the comment period, may not be considered by NMFS. All comments received are a part of the public record and will generally be posted for public viewing on *www.regulations.gov* without change. All personal identifying information (*e.g.,* name, address), confidential business information, or otherwise sensitive information submitted voluntarily by the sender will be publicly accessible. NMFS will accept anonymous comments (enter ''N/A'' in the required fields if you wish to remain anonymous).

Electronic copies of the Alaska Groundfish Harvest Specifications Final Environmental Impact Statement (Final EIS), Record of Decision (ROD), Supplementary Information Report (SIR) to the EIS, and the Initial Regulatory Flexibility Analysis (IRFA) prepared for this action may be obtained from *http://www.regulations.gov* or from the Alaska Region Web site at *http://alaskafisheries.noaa.gov*. The final 2015 Stock Assessment and Fishery Evaluation (SAFE) report for the groundfish resources of the BSAI, dated November 2015, is available from the North Pacific Fishery Management Council (Council) at 605 West 4th Avenue, Suite 306, Anchorage, AK 99501–2252, phone 907–271–2809, or from the Council's Web site at *http://www.npfmc.org/*. The draft 2016 SAFE report for the BSAI is available from the same source.

FOR FURTHER INFORMATION CONTACT: Steve Whitney, 907–586–7228.

SUPPLEMENTARY INFORMATION: Federal regulations at 50 CFR part 679 implement the Fishery Management Plan for Groundfish of the Bering Sea and Aleutian Islands Management Area (FMP) and govern the groundfish fisheries in the BSAI. The Council prepared the FMP, and NMFS approved it under the Magnuson-Stevens Fishery Conservation and Management Act (Magnuson-Stevens Act). General regulations governing U.S. fisheries also appear at 50 CFR part 600.

The FMP and its implementing regulations require NMFS, after consultation with the Council, to specify annually the total allowable catch (TAC) for each target species category. The sum TAC for all groundfish species must be within the optimum yield (OY) range of 1.4 million to 2.0 million metric tons (mt) (see § 679.20(a)(1)(i)(A)). Section 679.20(c)(1) further requires NMFS to publish proposed harvest specifications in the **Federal Register** and solicit public comments on proposed annual TACs and apportionments thereof, prohibited species catch (PSC) allowances, prohibited species quota (PSQ) reserves established by § 679.21, seasonal allowances of pollock, Pacific cod, and Atka mackerel TAC, American Fisheries Act allocations, Amendment 80 allocations, and Community

Development Quota (CDQ) reserve amounts established by § 679.20(b)(1)(ii). The proposed harvest specifications set forth in Tables 1 through 17 of this action satisfy these requirements.

Under § 679.20(c)(3), NMFS will publish the final harvest specifications for 2017 and 2018 after (1) considering comments received within the comment period (see DATES), (2) consulting with the Council at its December 2016 meeting, (3) considering information presented in the SIR that assesses the need to prepare a Supplemental EIS (see ADDRESSES), and (4) considering information presented in the final 2016 SAFE reports prepared for the 2017 and 2018 groundfish fisheries.

Other Actions Affecting the 2017 and 2018 Harvest Specifications

The Alaska Board of Fisheries (BOF), a regulatory body for the State of Alaska Department of Fish and Game (State), established a guideline harvest level (GHL) in State waters between 164 and 167 degrees west longitude in the Bering Sea subarea (BS) equal to 6.4 percent of the Pacific cod acceptable biological catch (ABC) for the BS. The Council recommends the proposed 2017 and 2018 Pacific cod TACs to accommodate the State's GHLs for Pacific cod in State waters in the BS. The Council and its BSAI Groundfish Plan Team (Plan Team), Scientific and Statistical Committee (SSC), and Advisory Panel (AP) recommended that the sum of all State and Federal water Pacific cod removals from the BS not exceed the proposed ABC recommendations of 255,000 mt. Accordingly, the Council set the proposed 2017 and 2018 Pacific cod TACs in the BS to account for State GHLs.

For 2017 and 2018, the BOF established a GHL in State waters in the Aleutian Islands subarea (AI) equal to 27 percent of the Pacific cod ABC for the AI. The Council recommends the proposed 2017 and 2018 Pacific cod TACs to accommodate the State's GHLs for Pacific cod in State waters in the AI. The Council and its Plan Team, SSC, and AP recommended that the sum of all State and Federal water Pacific cod removals from the AI not exceed the proposed ABC recommendations of 17,600 mt. Accordingly, the Council set the proposed 2017 and 2018 Pacific cod TACs in the AI to account for State GHLs.

In October 2015, the Council took final action to recommend for Secretarial Review Amendment 113 to the BSAI FMP. NMFS published a notice of availability for Amendment 113 on July 19, 2016 (81 FR 46883). The public comment period for the notice of availability on Amendment 113 ended on September 19, 2016, and the Secretary approved Amendment 113 on October 17, 2016. Amendment 113 sets aside a portion of the Aleutian Islands Pacific cod TAC for catcher vessels that directed fish for Aleutian Islands Pacific cod and then deliver the catch to Aleutian Islands shoreplants for processing.

NMFS published a proposed rule to implement Amendment 113 on August 1, 2016, and accepted public comment through August 31, 2016 (81 FR 50444). If NMFS approves the final rule, in November 2016, NMFS expects the authority to set aside Aleutian Islands Pacific cod for catcher vessels delivering to Aleutian Islands shoreplants for processing would be in effect by the beginning of the 2017 fisheries on January 1, 2017.

Amendment 111 to the FMP (81 FR 24714, April 27, 2016) became effective May 27, 2016. Amendment 111 implemented BSAI halibut PSC limit reductions for the trawl and non-trawl sectors. These amounts are found in Table 8.

Amendment 110 to the FMP (81 FR 37534, June 10, 2016) became effective July 11, 2016. Amendment 110 improves the management of Chinook and chum salmon bycatch in the Bering Sea pollock fishery by creating a comprehensive salmon bycatch avoidance program. Amendment 110 also changed the seasonal apportionments of the pollock TAC to allow more pollock to be harvested earlier in the year when Chinook salmon PSC use tends to be lower.

Proposed ABC and TAC Harvest Specifications

At the October 2016 Council meeting, the SSC, AP, and Council reviewed the most recent biological and harvest information on the condition of the BSAI groundfish stocks. The Council's Plan Team compiled and presented this information, which was initially compiled by the Plan Team and presented in the final 2015 SAFE report for the BSAI groundfish fisheries, dated November 2015 (see **ADDRESSES**). The amounts proposed for the 2017 and 2018 harvest specifications are based on the 2015 SAFE report, and are subject to change in the final harvest specifications to be published by NMFS following the Council's December 2016 meeting. In November 2016, the Plan Team updated the 2015 SAFE report to include new information collected during 2016, such as NMFS stock surveys, revised stock assessments, and catch data. At its December 2016 meeting, the Council will consider information contained in the final 2016 SAFE report, recommendations from the November 2016 Plan Team meeting, public testimony from the December 2016 SSC and AP meetings, and relevant written comments in making its recommendations for the final 2017 and 2018 harvest specifications.

In previous years, the OFLs and ABCs that have had the most significant changes (relative to the amount of assessed tonnage of fish) from the proposed to the final harvest specifications have been for OFLs and ABCs that are based on the most recent NMFS stock surveys, which provide updated estimates of stock biomass and spatial distribution, and changes to the models used in the stock assessments. These changes were recommended by the Plan Team in November 2016 and are included in the final 2016 SAFE report. The final 2016 SAFE report includes the most recent information, such as 2016 catch data. The final harvest specification amounts for these stocks are not expected to vary greatly from the proposed harvest specification amounts published here.

If the final 2016 SAFE report indicates that the stock biomass trend is increasing for a species, then the final 2017 and 2018 harvest specifications may reflect an increase from the proposed harvest specifications. Conversely, if the final 2016 SAFE report indicates that the stock biomass trend is decreasing for a species, then the final 2017 and 2018 harvest specifications may reflect a decrease from the proposed harvest specifications. In addition to changes driven by biomass trends, there may be changes in TACs due to the sum of ABCs exceeding 2 million mt. Since the regulations require TACs to be set to an OY between 1.4 and 2 million mt, the Council may be required to recommend TACs that are lower than the ABCs recommended by the Plan Team, if setting TACs equal to ABCs would cause TACs to exceed an OY of 2 million mt. Generally, ABCs greatly exceed 2 million mt in years with a large pollock biomass. NMFS anticipates that, both for 2017 and 2018, the sum of the ABCs will exceed 2 million mt. NMFS expects that the final total TAC for the BSAI for both 2017 and 2018 will equal 2 million mt.

The proposed ABCs and TACs are based on the best available biological and socioeconomic data, including projected biomass trends, information on assumed distribution of stock biomass, and revised technical methods used to calculate stock biomass. In general, the development of ABCs and

OFLs involves statistical modeling of fish populations. The FMP specifies a series of six tiers to define OFLs and ABCs based on the level of reliable information available to fishery scientists. Tier 1 represents the highest level of information quality available, while Tier 6 represents the lowest.

In October 2016, the SSC adopted the proposed 2017 and 2018 OFLs and ABCs recommended by the Plan Team for all groundfish species. The Council adopted the SSC's OFL and ABC recommendations. These amounts are unchanged from the final 2017 harvest specifications published in the **Federal Register** on March 18, 2016 (81 FR 14773). The Council adopted the AP's TAC recommendations. For 2017 and 2018, the Council recommended and NMFS proposes the OFLs, ABCs, and TACs listed in Table 1. The proposed ABCs reflect harvest amounts that are less than the specified OFLs. The sum of the proposed 2017 and 2018 ABCs for all assessed groundfish is 3,128,135 mt, which is the same as the final 2017 ABC total in the final 2016 and 2017 BSAI groundfish harvest specifications (81 FR 14773, March 18, 2016).

Specification and Apportionment of TAC Amounts

The Council recommended proposed TACs for 2017 and 2018 that are equal to proposed ABCs for Bering Sea Pacific ocean perch, Bering Sea sablefish, AI sablefish, and eastern Aleutian Islands (EAI) Pacific ocean perch. The Council recommended proposed TACs for 2017 and 2018 that are less than the proposed ABCs for Bering Sea pollock, AI ''other rockfish,'' AI pollock, Bogoslof pollock, Bering Sea Pacific cod, AI Pacific cod, yellowfin sole, Bering Sea Greenland turbot, AI Greenland turbot, arrowtooth flounder, Kamchatka flounder, rock sole, flathead sole, Alaska plaice, ''other flatfish,'' central Aleutian Islands (CAI) Pacific ocean perch, western Aleutian Islands (WAI) Pacific ocean perch, northern rockfish, eastern Bering Sea (EBS)/EAI rougheye rockfish, CAI/WAI rougheye rockfish, shortraker rockfish, Bering Sea ''other rockfish,'' Bering Sea/EAI, CAI, and WAI Atka mackerel, skates, sculpins, sharks, squids, and octopuses. Section 679.20(a)(5)(iii)(B)(*1*) requires the AI pollock TAC to be set at 19,000 mt when the AI pollock ABC equals or exceeds 19,000 mt. The Bogoslof pollock TAC is set to accommodate incidental catch amounts. TACs are set so that the sum of the overall TAC does not exceed the BSAI OY.

The proposed groundfish OFLs, ABCs, and TACs are subject to change pending the completion of the final 2016 SAFE report and the Council's recommendations for final 2017 and 2018 harvest specifications during its December 2016 meeting. These proposed amounts are consistent with the biological condition of groundfish stocks as described in the 2015 SAFE report, and have been adjusted for other biological and socioeconomic considerations. Pursuant to Section 3.2.3.4.1 of the FMP, the Council could recommend adjusting the TACs if ''warranted on the basis of bycatch considerations, management uncertainty, or socioeconomic considerations; or if required in order to cause the sum of the TACs to fall within the OY range.'' Table 1 lists the proposed 2017 and 2018 OFL, ABC, TAC, initial TAC (ITAC), and CDQ amounts for groundfish for the BSAI. The proposed apportionment of TAC amounts among fisheries and seasons is discussed below.

TABLE 1—PROPOSED 2017 AND 2018 OVERFISHING LEVEL (OFL), ACCEPTABLE BIOLOGICAL CATCH (ABC), TOTAL ALLOWABLE CATCH (TAC), INITIAL TAC (ITAC), AND CDQ RESERVE ALLOCATION OF GROUNDFISH IN THE BSAI[1]

[Amounts are in metric tons]

Species	Area	Proposed 2017 and 2018				
		OFL	ABC	TAC	ITAC[2]	CDQ[3 4]
Pollock[4]	BS	3,540,000	2,019,000	1,340,643	1,206,579	134,064
	AI	44,455	36,664	19,000	17,100	1,900
	Bogoslof	31,906	23,850	500	500	
Pacific cod[5]	BS	412,000	255,000	238,680	213,141	25,539
	AI	23,400	17,600	12,839	11,465	1,374
Sablefish	BS	1,241	1,052	1,052	447	39
	AI	1,681	1,423	1,423	302	27
Yellowfin sole	BSAI	219,200	203,500	144,000	128,592	15,408
Greenland turbot	BSAI	7,416	6,132	2,873	2,442	n/a
	BS	n/a	4,734	2,673	2,272	286
	AI	n/a	1,398	200	170	
Arrowtooth flounder	BSAI	84,156	72,216	14,000	11,900	1,498
Kamchatka flounder	BSAI	11,700	10,000	5,000	4,250	
Rock sole[6]	BSAI	149,400	145,000	57,100	50,990	6,110
Flathead sole[7]	BSAI	77,544	64,580	21,000	18,753	2,247
Alaska plaice	BSAI	46,800	39,100	14,500	12,325	
Other flatfish[8]	BSAI	17,414	13,061	2,500	2,125	
Pacific Ocean perch	BSAI	38,589	31,724	31,490	27,779	n/a
	BS	n/a	7,953	7,953	6,760	
	EAI	n/a	7,537	7,537	6,731	806
	CAI	n/a	7,002	7,000	6,251	749
	WAI	n/a	9,232	9,000	8,037	963
Northern rockfish	BSAI	14,085	11,468	4,500	3,825	
Rougheye	BSAI	855	694	300	255	
rockfish[9]	EBS/EAI	n/a	216	100	85	
	CAI/WAI	n/a	478	200	170	
Shortraker rockfish	BSAI	690	518	200	170	
Other rockfish[10]	BSAI	1,667	1,250	875	744	
	BS	n/a	695	325	276	
	AI	n/a	555	550	468	
Atka mackerel	BSAI	99,490	85,840	55,000	49,115	5,885
	EAI/BS	n/a	29,296	28,500	25,451	3,050

TABLE 1—PROPOSED 2017 AND 2018 OVERFISHING LEVEL (OFL), ACCEPTABLE BIOLOGICAL CATCH (ABC), TOTAL ALLOWABLE CATCH (TAC), INITIAL TAC (ITAC), AND CDQ RESERVE ALLOCATION OF GROUNDFISH IN THE BSAI[1]—Continued

[Amounts are in metric tons]

Species	Area	Proposed 2017 and 2018				
		OFL	ABC	TAC	ITAC[2]	CDQ[3 4]
	CAI	n/a	25,860	16,000	14,288	1,712
	WAI	n/a	30,684	10,500	9,377	1,124
Skates	BSAI	47,674	39,943	26,000	22,100	
Sculpins	BSAI	52,365	39,725	4,500	3,825	
Sharks	BSAI	1,363	1,022	125	106	
Squids	BSAI	6,912	5,184	1,500	1,275	
Octopuses	BSAI	3,452	2,589	400	340	
Total		4,935,455	3,128,135	2,000,000	1,790,446	196,895

[1] These amounts apply to the entire BSAI management area unless otherwise specified. With the exception of pollock, and for the purpose of these harvest specifications, the Bering Sea (BS) subarea includes the Bogoslof District.

[2] Except for pollock, the portion of the sablefish TAC allocated to hook-and-line and pot gear, and the Amendment 80 species (Atka mackerel, Aleutian Islands Pacific ocean perch, yellowfin sole, rock sole, flathead sole, and Pacific cod), 15 percent of each TAC is put into a reserve. The ITAC for these species is the remainder of the TAC after the subtraction of these reserves.

[3] For the Amendment 80 species (Atka mackerel, Aleutian Islands Pacific ocean perch, yellowfin sole, rock sole, flathead sole, and Pacific cod), 10.7 percent of the TAC is reserved for use by CDQ participants (see §§ 679.20(b)(1)(ii)(C) and 679.31). Twenty percent of the sablefish TAC is allocated to hook-and-line gear or pot gear, and 7.5 percent of the sablefish TAC is allocated to trawl gear. The 2017 hook-and-line and pot gear portion of the sablefish ITAC and CDQ reserve will not be specified until the final 2017 and 2018 harvest specifications. 10.7 percent of the TACs for Bering Sea Greenland turbot and arrowtooth flounder are reserved for use by CDQ participants (see § 679.20(b)(1)(ii)(B) and (D)). Aleutian Islands Greenland turbot, "other flatfish," Alaska plaice, Bering Sea Pacific ocean perch, Kamchatka flounder, northern rockfish, shortraker rockfish, rougheye rockfish, "other rockfish," squids, octopuses, skates, sculpins, and sharks are not allocated to the CDQ program.

[4] Under § 679.20(a)(5)(i)(A)(*1*), the annual Bering Sea subarea pollock TAC, after subtracting first for the CDQ directed fishing allowance (10 percent) and second for the incidental catch allowance (4.0 percent), is further allocated by sector for a directed pollock fishery as follows: inshore—50 percent; catcher/processor—40 percent; and motherships—10 percent. Under § 679.20(a)(5)(iii)(B)(*2*)(*i*) and (*ii*), the annual Aleutian Islands subarea pollock TAC, after subtracting first for the CDQ directed fishing allowance (10 percent) and second for the incidental catch allowance (2,400 mt), is allocated to the Aleut Corporation for a directed pollock fishery.

[5] The Bering Sea subarea and Aleutian Islands subarea Pacific cod TACs are set to account for the State of Alaska guideline harvest level in state waters of the Aleutian Islands subarea.

[6] "Rock sole" includes *Lepidopsetta polyxystra* (Northern rock sole) and *Lepidopsetta bilineata* (Southern rock sole).

[7] "Flathead sole" includes *Hippoglossoides elassodon* (flathead sole) and *Hippoglossoides robustus* (Bering flounder).

[8] "Other flatfish" includes all flatfish species, except for halibut (a prohibited species), flathead sole, Greenland turbot, rock sole, yellowfin sole, arrowtooth flounder, Kamchatka flounder, and Alaska plaice.

[9] "Rougheye rockfish" includes *Sebastes aleutianus* (rougheye) and *Sebastes melanostictus* (blackspotted).

[10] "Other rockfish" includes all *Sebastes* and *Sebastolobus* species except for Pacific ocean perch, northern, shortraker, and rougheye rockfish.

Note: Regulatory areas and districts are defined at § 679.2 (BS=Bering Sea subarea, AI=Aleutian Islands subarea, EAI=Eastern Aleutian district, CAI=Central Aleutian district, WAI=Western Aleutian district.)

Groundfish Reserves and the Incidental Catch Allowance (ICA) for Pollock, Atka Mackerel, Flathead Sole, Rock Sole, Yellowfin Sole, and AI Pacific Ocean Perch

Section 679.20(b)(1)(i) requires NMFS to reserve 15 percent of the TAC for each target species category, except for pollock, hook-and-line or pot gear allocation of sablefish, and Amendment 80 species, in a non-specified reserve. Section 679.20(b)(1)(ii)(B) requires NMFS to allocate 20 percent of the hook-and-line and pot gear allocation of sablefish to the fixed gear sablefish CDQ reserve. Section 679.20(b)(1)(ii)(D) requires NMFS to allocate 7.5 percent of the trawl gear allocation of sablefish and 10.7 percent of Bering Sea Greenland turbot and arrowtooth flounder to the respective CDQ reserves. Section 679.20(b)(1)(ii)(C) requires NMFS to allocate 10.7 percent of the TACs for Atka mackerel, AI Pacific ocean perch, yellowfin sole, rock sole, flathead sole, and Pacific cod to the CDQ reserves. Sections 679.20(a)(5)(i)(A) and 679.31(a) also require allocation of 10 percent of the BS pollock TACs to the pollock CDQ directed fishing allowance (DFA). The entire Bogoslof District pollock TAC is allocated as an ICA (see § 679.20(a)(5)(ii)). With the exception of the hook-and-line and pot gear sablefish CDQ reserve, the regulations do not further apportion the CDQ reserves by gear.

Pursuant to § 679.20(a)(5)(i)(A)(*1*), NMFS proposes a pollock ICA of 4.0 percent or 53,626 mt of the Bering Sea subarea pollock TAC after subtracting the 10 percent CDQ reserve. This allowance is based on NMFS' examination of the pollock incidentally retained and discarded catch, including the incidental catch by CDQ vessels, in target fisheries other than pollock from 2000 through 2016. During this 17-year period, the pollock incidental catch ranged from a low of 2.4 percent in 2006 to a high of 4.8 percent in 2014, with a 17-year average of 3.2 percent. Pursuant to § 679.20(a)(5)(iii)(B)(*2*)(*i*) and (*ii*), NMFS proposes a pollock ICA of 2,400 mt of the AI subarea TAC after subtracting the 10 percent CDQ DFA. This allowance is based on NMFS' examination of the pollock incidental catch, including the incidental catch by CDQ vessels, in target fisheries other than pollock from 2003 through 2016. During this 14-year period, the incidental catch of pollock ranged from a low of 5 percent in 2006 to a high of 17 percent in 2013, with a 14-year average of 8 percent.

Pursuant to § 679.20(a)(8) and (10), NMFS proposes ICAs of 4,000 mt of flathead sole, 5,000 mt of rock sole, 4,500 mt of yellowfin sole, 10 mt of Western Aleutian District Pacific ocean perch, 60 mt of Central Aleutian District Pacific ocean perch, 100 mt of Eastern Aleutian District Pacific ocean perch, 20 mt of Western Aleutian District Atka mackerel, 75 mt of Central Aleutian District Atka mackerel, and 1,000 mt of Eastern Aleutian District and Bering Sea

subarea Atka mackerel after subtracting the 10.7 percent CDQ reserve. These ICAs are based on NMFS' examination of the average incidental retained and discarded catch in other target fisheries from 2003 through 2016.

The regulations do not designate the remainder of the non-specified reserve by species or species group. Any amount of the reserve may be apportioned to a target species that contributed to the non-specified reserve during the year, provided that such apportionments do not result in overfishing (see § 679.20(b)(1)(i)).

Allocations of Pollock TAC Under the American Fisheries Act (AFA)

Section 679.20(a)(5)(i)(A) requires that Bering Sea pollock TAC be apportioned after subtracting 10 percent for the CDQ program and 4.0 percent for the ICA as a DFA as follows: 50 percent to the inshore sector, 40 percent to the catcher/processor sector, and 10 percent to the mothership sector. In the Bering Sea subarea, 45 percent of the DFA is allocated to the A season (January 20 to June 10) and 55 percent of the DFA is allocated to the B season (June 10 to November 1) (§§ 679.20(a)(5)(i)(B)(*1*) and 679.23(e)(2)). The AI directed pollock fishery allocation to the Aleut Corporation is the amount of pollock remaining in the AI subarea after subtracting 1,900 mt for the CDQ DFA (10 percent), and 2,400 mt for the ICA (§ 679.20(a)(5)(iii)(B)(*2*)(*i*)–(*iii*)). In the AI subarea, the total A season apportionment of the pollock TAC may equal up to 40 percent of the ABC, and the remainder of the pollock TAC is allocated to the B season (§ 679.20(a)(5)(iii)(B)(*3*)). Table 2 lists these proposed 2017 and 2018 amounts.

Section 679.20(a)(5)(iii)(B)(*6*) sets harvest limits for pollock in the A season (January 20 to June 10) in Areas 543, 542, and 541. In Area 543, the A season pollock harvest limit is no more than 5 percent of the Aleutian Islands pollock ABC. In Area 542, the A season pollock harvest limit is no more than 15 percent of the Aleutian Islands ABC. In Area 541, the A season pollock harvest limit is no more than 30 percent of the Aleutian Islands ABC.

Section 679.20(a)(5)(i)(A)(*4*) also includes several specific requirements regarding Bering Sea subarea pollock allocations. First, it requires that 8.5 percent of the pollock allocated to the catcher/processor sector be available for harvest by AFA catcher vessels with catcher/processor sector endorsements, unless the Regional Administrator receives a cooperative contract that allows the distribution of harvest among AFA catcher/processors and AFA catcher vessels in a manner agreed to by all members. Second, AFA catcher/processors not listed in the AFA are limited to harvesting not more than 0.5 percent of the pollock allocated to the catcher/processor sector. Table 2 lists the proposed 2017 and 2018 allocations of pollock TAC. Tables 14 through 17 list the AFA catcher/processor and catcher vessel harvesting sideboard limits. The Bering Sea subarea inshore pollock cooperative and open access sector allocations are based on the submission of AFA inshore cooperative applications due to NMFS on December 1 of each calendar year. Because AFA inshore cooperative applications for 2017 have not been submitted to NMFS, and NMFS therefore cannot calculate 2017 allocations, NMFS has not included inshore cooperative text and tables in these proposed harvest specifications. NMFS will post 2017 AFA inshore cooperative allocations on the Alaska Region Web site at *http://alaskafisheries.noaa.gov* prior to the start of the fishing year on January 1, 2017, based on the harvest specifications effective on that date.

Table 2 also lists proposed seasonal apportionments of pollock and harvest limits within the Steller Sea Lion Conservation Area (SCA). The harvest of pollock within the SCA, as defined at § 679.22(a)(7)(vii), is limited to no more than 28 percent of the DFA before noon, April 1, as provided in § 679.20(a)(5)(i)(C). The A season pollock SCA harvest limit will be apportioned to each sector in proportion to each sector's allocated percentage of the DFA. Table 2 lists these proposed 2017 and 2018 amounts by sector.

TABLE 2—PROPOSED 2017 AND 2018 ALLOCATIONS OF POLLOCK TACS TO THE DIRECTED POLLOCK FISHERIES AND TO THE CDQ DIRECTED FISHING ALLOWANCES (DFA) [1]

[Amounts are in metric tons]

Area and sector	2017 and 2018 Allocations	A season [1]		B season [1]
		A season DFA	SCA harvest limit [2]	B season DFA
Bering Sea subarea TAC	1,340,643	n/a	n/a	n/a
CDQ DFA	134,064	60,329	37,538	73,735
ICA [1]	48,263	n/a	n/a	n/a
AFA Inshore	579,158	260,621	162,164	318,537
AFA Catcher/Processors [3]	463,326	208,497	129,731	254,829
Catch by C/Ps	423,943	190,775	n/a	233,169
Catch by C/Vs [3]	39,383	17,722	n/a	21,661
Unlisted C/P Limit [4]	2,317	1,042	n/a	1,274
AFA Motherships	115,832	52,124	32,433	63,707
Excessive Harvesting Limit [5]	202,705	n/a	n/a	n/a
Excessive Processing Limit [6]	347,495	n/a	n/a	n/a
Total Bering Sea DFA (non-CDQ)	1,158,316	521,242	324,328	637,074
Aleutian Islands subarea ABC	36,664	n/a	n/a	n/a
Aleutian Islands subarea TAC	19,000	n/a	n/a	n/a
CDQ DFA	1,900	760	n/a	1,140
ICA	2,400	1,200	n/a	1,200
Aleut Corporation	14,700	13,520	n/a	1,180
Area harvest limit [7]	n/a	n/a	n/a	n/a
Area 541 harvest limit [7]	10,999	n/a	n/a	n/a
Area 542 harvest limit [7]	5,500	n/a	n/a	n/a
Area 543 harvest limit [7]	1,833	n/a	n/a	n/a

TABLE 2—PROPOSED 2017 AND 2018 ALLOCATIONS OF POLLOCK TACS TO THE DIRECTED POLLOCK FISHERIES AND TO THE CDQ DIRECTED FISHING ALLOWANCES (DFA) [1]—Continued

[Amounts are in metric tons]

Area and sector	2017 and 2018 Allocations	A season [1]		B season [1]
		A season DFA	SCA harvest limit [2]	B season DFA
Bogoslof District ICA [8]	100	n/a	n/a	n/a

[1] Pursuant to § 679.20(a)(5)(i)(A), the annual Bering Sea subarea pollock TAC, after subtracting the CDQ DFA (10 percent) and the ICA (4.0 percent), is allocated as a DFA as follows: inshore sector 50 percent, catcher/processor sector 40 percent, and mothership sector 10 percent. In the Bering Sea subarea, 45 percent of the DFA is allocated to the A season (January 20–June 10) and 55 percent of the DFA is allocated to the B season (June 10–November 1). Pursuant to § 679.20(a)(5)(iii)(B)(*2*)(*i*) and (*ii*), the annual AI pollock TAC, after subtracting first for the CDQ DFA (10 percent) and second the ICA (2,400 mt), is allocated to the Aleut Corporation for a directed pollock fishery. In the AI subarea, the A season is allocated 40 percent of the ABC, and the B season is allocated the remainder of the directed pollock fishery.

[2] In the Bering Sea subarea, no more than 28 percent of each sector's annual DFA may be taken from the SCA before noon, April 1.

[3] Pursuant to § 679.20(a)(5)(i)(A)(*4*), not less than 8.5 percent of the DFA allocated to listed catcher/processors (C/Ps) shall be available for harvest only by eligible catcher vessels (CVs) delivering to listed C/Ps.

[4] Pursuant to § 679.20(a)(5)(i)(A)(*4*)(*iii*), the AFA unlisted catcher/processors are limited to harvesting not more than 0.5 percent of the catcher/processor sector's allocation of pollock.

[5] Pursuant to § 679.20(a)(5)(i)(A)(*6*), NMFS establishes an excessive harvesting share limit equal to 17.5 percent of the sum of the pollock DFAs not including CDQ.

[6] Pursuant to § 679.20(a)(5)(i)(A)(*7*), NMFS establishes an excessive processing share limit equal to 30.0 percent of the sum of the pollock DFAs not including CDQ.

[7] Pursuant to § 679.20(a)(5)(iii)(B)(*6*), NMFS establishes harvest limits for pollock in the A season in Area 541 no more than 30 percent, in Area 542 no more than 15 percent, and in Area 543 no more than 5 percent of the Aleutian Islands pollock ABC.

[8] The Regional Administrator proposes closing the Bogoslof pollock fishery for directed fishing under the final 2017 and 2018 harvest specifications for the BSAI. The amounts specified are for incidental catch only and are not apportioned by season or sector.

Allocation of the Atka Mackerel TACs

Section 679.20(a)(8) allocates the Atka mackerel TACs to the Amendment 80 and BSAI trawl limited access sectors, after subtracting the CDQ reserves, jig gear allocation, and ICAs for the BSAI trawl limited access sector and non-trawl gear sectors (Table 3). The percentage of the ITAC for Atka mackerel allocated to the Amendment 80 and BSAI trawl limited access sectors is listed in Table 33 to 50 CFR part 679 and in § 679.91. Pursuant to § 679.20(a)(8)(i), up to 2 percent of the Eastern Aleutian District and Bering Sea subarea Atka mackerel ITAC may be allocated to jig gear. The percentage of this allocation is recommended annually by the Council based on several criteria, including the anticipated harvest capacity of the jig gear fleet. The Council recommended and NMFS proposes a 0.5 percent allocation of the Atka mackerel ITAC in the Eastern Aleutian District and Bering Sea subarea to jig gear in 2017 and 2018. This percentage is applied to the TAC after subtracting the CDQ reserve and the ICA.

Section 679.20(a)(8)(ii)(A) apportions the Atka mackerel TAC into two equal seasonal allowances. Section 679.23(e)(3) sets the first seasonal allowance for directed fishing with trawl gear from January 20 through June 10 (A season), and the second seasonal allowance from June 10 through December 31 (B season). Section 679.23(e)(4)(iii) applies Atka mackerel seasons to CDQ Atka mackerel fishing. The ICA and jig gear allocations are not apportioned by season.

Section 679.20(a)(8)(ii)(C)(*1*)(*i*) and (*ii*) limits Atka mackerel catch within waters 0 nm to 20 nm of Steller sea lion sites listed in Table 6 to 50 CFR part 679 and located west of 178° W longitude to no more than 60 percent of the annual TACs in Areas 542 and 543; and equally divides the annual TAC between the A and B seasons as defined at § 679.23(e)(3). Section 679.20(a)(8)(ii)(C)(*2*) requires the annual TAC in Area 543 will be no more than 65 percent of the ABC in Area 543. Section 679.20(a)(8)(ii)(D) requires that any unharvested Atka mackerel A season allowance that is added to the B season be prohibited from being harvested within waters 0 nm to 20 nm of Steller sea lion sites listed in Table 6 to 50 CFR part 679 and located in Areas 541, 542, and 543.

Two Amendment 80 cooperatives have formed for the 2017 fishing year. Because all Amendment 80 vessels are part of a cooperative, no allocation to the Amendment 80 limited access sector is required. NMFS will post 2017 Amendment 80 cooperative allocations on the Alaska Region Web site at *http://alaskafisheries.noaa.gov* prior to the start of the fishing year on January 1, 2017, based on the harvest specifications effective on that date.

Table 3 lists these 2017 and 2018 Atka mackerel season allowances, area allowances, and the sector allocations. The 2018 allocations for Amendment 80 species between Amendment 80 cooperatives and the Amendment 80 limited access sector will not be known until eligible participants apply for participation in the program by November 1, 2017. NMFS will post 2018 Amendment 80 cooperatives and Amendment 80 limited access allocations on the Alaska Region Web site at *http://alaskafisheries.noaa.gov* prior to the start of the fishing year on January 1, 2018, based on the harvest specifications effective on that date.

TABLE 3—PROPOSED 2017 AND 2018 SEASONAL AND SPATIAL ALLOWANCES, GEAR SHARES, CDQ RESERVE, INCIDENTAL CATCH ALLOWANCE, AND AMENDMENT 80 ALLOCATIONS OF THE BSAI ATKA MACKEREL TAC

[Amounts are in metric tons]

Sector [1]	Season [2 3 4]	2017 and 2018 Allocation by area		
		Eastern Aleutian District/ Bering Sea	Central Aleutian District	Western Aleutian District
TAC	n/a	28,500	16,000	10,500
CDQ reserve	Total	3,050	1,712	1,124
	A	1,525	856	562
	Critical habitat [5]	n/a	514	337
	B	1,525	856	562
	Critical habitat [5]	n/a	514	337
ICA	Total	1,000	75	20
Jig [6]	Total	122		
BSAI trawl limited access	Total	2,433	1,421	
	A	1,216	711	
	Critical habitat [5]	n/a	426	
	B	1,216	711	
	Critical habitat [5]	n/a	426	
Amendment 80 [7]	Total	21,895	12,792	9,357
Alaska Groundfish Cooperative for 2017	Total	12,326	7,615	5,754
	A	6,163	3,808	2,877
	Critical habitat [5]	n/a	2,285	1,726
	B	6,163	3,808	2,877
	Critical habitat [5]	n/a	2,285	1,726
Alaska Seafood Cooperative for 2017	Total	9,570	5,177	3,603
	A	4,785	2,589	1,802
	Critical habitat [5]	n/a	1,553	1,081
	B	4,785	2,589	1,802
	Critical habitat [5]	n/a	1,553	1,081

[1] Section 679.20(a)(8)(ii) allocates the Atka mackerel TACs, after subtracting the CDQ reserves, ICAs, and the jig gear allocation, to the Amendment 80 and BSAI trawl limited access sectors. The allocation of the ITAC for Atka mackerel to the Amendment 80 and BSAI trawl limited access sectors is established in Table 33 to 50 CFR part 679 and § 679.91. The CDQ reserve is 10.7 percent of the TAC for use by CDQ participants (see §§ 679.20(b)(1)(ii)(C) and 679.31).

[2] Sections 679.20(a)(8)(ii)(A) and 679.22(a) establish temporal and spatial limitations for the Atka mackerel fishery.

[3] The seasonal allowances of Atka mackerel are 50 percent in the A season and 50 percent in the B season.

[4] Section 679.23(e)(3) authorizes directed fishing for Atka mackerel with trawl gear during the A season from January 20 to June 10, and the B season from June 10 to December 31.

[5] Section 679.20(a)(8)(ii)(C)(*1*)(*i*) limits no more than 60 percent of the annual TACs in Areas 542 and 543 to be caught inside of critical habitat; paragraph (a)(ii)(C)(*1*)(*ii*) equally divides the annual TACs between the A and B seasons as defined at § 679.23(e)(3); and paragraph (a)(8)(ii)(C)(*2*) requires the TAC in Area 543 shall be no more than 65 percent of ABC.

[6] Section 679.20(a)(8)(i) requires that up to 2 percent of the Eastern Aleutian District and Bering Sea subarea TAC be allocated to jig gear after subtraction of the CDQ reserve and ICA. The amount of this allocation is 0.5 percent. The jig gear allocation is not apportioned by season.

[7] The 2018 allocations for Amendment 80 Atka mackerel between Amendment 80 cooperatives and the Amendment 80 limited access sector will not be known until eligible participants apply for participation in the program by November 1, 2017.

Allocation of the Pacific Cod TAC

The Council recommended and NMFS proposes separate BS and AI subarea OFLs, ABCs, and TACs for Pacific cod. Section 679.20(b)(1)(ii)(C) allocates 10.7 percent of the BS TAC and the AI TAC to the CDQ program. After CDQ allocations have been deducted from the respective BS and AI Pacific cod TACs, the remaining BS and AI Pacific cod TACs are combined for calculating further BSAI Pacific cod sector allocations. However, if the non-CDQ Pacific cod TAC is or will be reached in either the BS or AI subareas, NMFS will prohibit non-CDQ directed fishing for Pacific cod in that subarea, as provided in § 679.20(d)(1)(iii).

Section 679.20(a)(7)(i) and (ii) allocates the Pacific cod TAC in the combined BSAI TAC, after subtracting 10.7 percent for the CDQ program, as follows: 1.4 percent to vessels using jig gear, 2.0 percent to hook-and-line or pot catcher vessels less than 60 ft (18.3 m) length overall (LOA), 0.2 percent to hook-and-line catcher vessels greater than or equal to 60 ft (18.3 m) LOA, 48.7 percent to hook-and-line catcher/processors, 8.4 percent to pot catcher vessels greater than or equal to 60 ft (18.3 m) LOA, 1.5 percent to pot catcher/processors, 2.3 percent to AFA trawl catcher/processors, 13.4 percent to non-AFA trawl catcher/processors, and 22.1 percent to trawl catcher vessels. The BSAI ICA for the hook-and-line and pot sectors will be deducted from the aggregate portion of BSAI Pacific cod TAC allocated to the hook-and-line and pot sectors. For 2017 and 2018, the Regional Administrator proposes a BSAI ICA of 500 mt, based on anticipated incidental catch by these sectors in other fisheries.

The BSAI ITAC allocation of Pacific cod to the Amendment 80 sector is established in Table 33 to 50 CFR part 679 and § 679.91. Two Amendment 80 cooperatives have formed for the 2017 fishing year. Because all Amendment 80 vessels are part of a cooperative, no allocation to the Amendment 80 limited access sector is required. NMFS will post 2017 Amendment 80 cooperative allocations on the Alaska Region Web site at *http://alaskafisheries.noaa.gov* prior to the start of the fishing year on January 1, 2017, based on the harvest specifications effective on that date.

The 2018 allocations for Amendment 80 species between Amendment 80 cooperatives and the Amendment 80 limited access sector will not be known until eligible participants apply for participation in the program by November 1, 2017. NMFS will post 2018 Amendment 80 cooperatives and

Amendment 80 limited access allocations on the Alaska Region Web site at *http://alaskafisheries.noaa.gov* prior to the start of the fishing year on January 1, 2018, based on the harvest specifications effective on that date.

The Pacific cod ITAC is apportioned into seasonal allowances to disperse the Pacific cod fisheries over the fishing year (see §§ 679.20(a)(7), (a)(7)(iv)(A), and 679.23(e)(5)). In accordance with § 679.20(a)(7)(iv)(B) and (C), any unused portion of a seasonal Pacific cod allowance will become available at the beginning of the next seasonal allowance.

Section 679.20(a)(7)(vii) requires the Regional Administrator to establish an Area 543 Pacific cod harvest limit based on Pacific cod abundance in Area 543. Based on the 2015 stock assessment, the Regional Administrator determined the Area 543 Pacific cod harvest limit to be 26.3 percent of the AI Pacific cod TAC for 2017 and 2018. NMFS first subtracted the State GHL Pacific cod amount from the AI Pacific cod ABC and then multiplied the remaining ABC for AI Pacific cod by the percentage of Pacific cod estimated in Area 543. Based on these calculations, the Area 543 harvest limit is 3,379 mt.

The CDQ and non-CDQ season allowances by gear based on the proposed 2017 and 2018 Pacific cod TACs are listed in Table 4 based on the sector allocation percentages of Pacific cod set forth at § 679.20(a)(7)(i)(B) and (a)(7)(iv)(A); and the seasonal allowances of Pacific cod set forth at § 679.23(e)(5).

TABLE 4—PROPOSED 2017 AND 2018 GEAR SHARES AND SEASONAL ALLOWANCES OF THE BSAI [1] PACIFIC COD TAC

[Amounts are in metric tons]

Sector	Percent	2017 and 2018 share of gear sector total	2017 and 2018 share of sector total	2017 and 2018 seasonal apportionment	
				Season	Amount
Total Bering Sea TAC	n/a	238,680	n/a	n/a	n/a
Bering Sea CDQ	n/a	25,539	n/a	See § 679.20(a)(7)(i)(B)	n/a
Bering Sea non-CDQ TAC	n/a	213,141	n/a	n/a	n/a
Total Aleutian Islands TAC	n/a	12,839	n/a	n/a	n/a
Aleutian Islands CDQ	n/a	1,374	n/a	See § 679.20(a)(7)(i)(B)	n/a
Aleutian Islands non-CDQ TAC	n/a	11,465	n/a	n/a	n/a
Western Aleutians Islands Limit	n/a	3,379	n/a	n/a	n/a
Total BSAI non-CDQ TAC [1]	100	224,606	n/a	n/a	n/a
Total hook-and-line/pot gear	60.8	136,561	n/a	n/a	n/a
Hook-and-line/pot ICA [2]	n/a	n/a	500	n/a	n/a
Hook-and-line/pot sub-total	n/a	136,061	n/a	n/a	n/a
Hook-and-line catcher/processors	48.7	n/a	108,983	Jan 1–Jun 10	55,581
				Jun 10–Dec 31	53,402
Hook-and-line catcher vessels >60 ft LOA	0.2	n/a	448	Jan 1–Jun 10	228
				Jun 10–Dec 31	219
Pot catcher/processors	1.5	n/a	3,357	Jan 1–Jun 10	1,712
				Sept 1–Dec 31	1,645
Pot catcher vessels >60 ft LOA	8.4	n/a	18,798	Jan 1–Jun 10	9,587
				Sept 1–Dec 31	9,211
Catcher vessels <60 ft LOA using hook-and-line or pot gear.	2	n/a	4,476	n/a	n/a
Trawl catcher vessels	22.1	49,638	n/a	Jan 20–Apr 1	36,732
				Apr 1–Jun 10	5,460
				Jun 10–Nov 1	7,446
AFA trawl catcher/processors	2.3	5,166	n/a	Jan 20–Apr 1	3,874
				Apr 1–Jun 10	1,291
				Jun 10–Nov 1	0
Amendment 80	13.4	30,097	n/a	Jan 20–Apr 1	22,573
				Apr 1–Jun 10	7,524
				Jun 10–Nov 1	0
Alaska Groundfish Cooperative for 2017 [3]	n/a	4,751	n/a	Jan 20–Apr 1	3,563
				Apr 1–Jun 10	1,188
				Jun 10–Nov 1	0
Alaska Seafood Cooperative for 2017 [3]	n/a	25,346	n/a	Jan 20–Apr 1	19,010
				Apr 1–Jun 10	6,337
				Jun 10–Nov 1	0
Jig	1.4	3,144	n/a	Jan 1–Apr 30	1,887
				Apr 30–Aug 31	629
				Aug 31–Dec 31	629

[1] The gear shares and seasonal allowances for BSAI Pacific cod TAC are based on the sum of the BS and AI Pacific cod TACs. If the TAC for Pacific cod in either the AI or BS is reached, then directed fishing for Pacific cod in that subarea may be prohibited, even if a BSAI allowance remains.

[2] The ICA for the hook-and-line and pot sectors will be deducted from the aggregate portion of Pacific cod TAC allocated to the hook-and-line and pot sectors. The Regional Administrator proposes an ICA of 500 mt for 2017 and 2018 based on anticipated incidental catch in these fisheries.

[3] The 2018 allocations for Amendment 80 species between Amendment 80 cooperatives and the Amendment 80 limited access sector will not be known until eligible participants apply for participation in the program by November 1, 2017.

Sablefish Gear Allocation

Section 679.20(a)(4)(iii) and (iv) requires allocation of sablefish TACs for the Bering Sea and AI subareas between trawl gear and hook-and-line or pot gear. Gear allocations of the TACs for the Bering Sea subarea are 50 percent for trawl gear and 50 percent for hook-and-line or pot gear. Gear allocations for the TACs for the AI subarea are 25 percent for trawl gear and 75 percent for hook-and-line or pot gear. Section 679.20(b)(1)(ii)(B) requires NMFS to apportion 20 percent of the hook-and-line or pot gear allocation of sablefish to the CDQ reserve. Additionally, § 679.20(b)(1)(ii)(D)(*1*) requires that 7.5 percent of the trawl gear allocation of sablefish from the nonspecified reserves, established under § 679.20(b)(1)(i), be apportioned to the CDQ reserve. The Council has recommended that only trawl sablefish TAC be established biennially. The harvest specifications for the hook-and-line gear and pot gear sablefish Individual Fishing Quota (IFQ) fisheries are limited to the 2017 fishing year to ensure those fisheries are conducted concurrently with the halibut IFQ fishery. Concurrent sablefish and halibut IFQ fisheries reduce the potential for discards of halibut and sablefish in those fisheries. The sablefish IFQ fisheries remain closed at the beginning of each fishing year until the final harvest specifications for the sablefish IFQ fisheries are in effect. Table 5 lists the proposed 2017 and 2018 gear allocations of the sablefish TAC and CDQ reserve amounts.

TABLE 5—PROPOSED 2017 AND 2018 GEAR SHARES AND CDQ RESERVE OF BSAI SABLEFISH TACS

[Amounts are in metric tons]

Subarea and gear	Percent of TAC	2017 Share of TAC	2017 ITAC [1]	2017 CDQ reserve	2018 Share of TAC	2018 ITAC	2018 CDQ reserve
Bering Sea:							
Trawl	50	526	447	39	526	447	39
Hook-and-line gear [2]	50	526	n/a	105	n/a	n/a	n/a
Total	100	1,052	447	145	526	447	39
Aleutian Islands:							
Trawl	25	356	302	27	356	302	27
Hook-and-line gear [2]	75	1,067	n/a	213	n/a	n/a	n/a
Total	100	1,423	302	240	356	302	27

[1] Except for the sablefish hook-and-line or pot gear allocation, 15 percent of TAC is apportioned to the reserve. The ITAC is the remainder of the TAC after the subtraction of these reserves.

[2] For the portion of the sablefish TAC allocated to vessels using hook-and-line or pot gear, 20 percent of the allocated TAC is reserved for use by CDQ participants. Section 679.20(b)(1) does not provide for the establishment of an ITAC for sablefish allocated to hook-and-line or pot gear.

Note: Seasonal or sector apportionments may not total precisely due to rounding.

Allocation of the Aleutian Islands Pacific Ocean Perch, and BSAI Flathead Sole, Rock Sole, and Yellowfin Sole TACs

Section 679.20(a)(10)(i) and (ii) requires that NMFS allocate AI Pacific ocean perch, and BSAI flathead sole, rock sole, and yellowfin sole TACs between the Amendment 80 and BSAI trawl limited access sectors, after subtracting 10.7 percent for the CDQ reserve and an ICA for the BSAI trawl limited access sector and vessels using non-trawl gear. The allocation of the ITAC for AI Pacific ocean perch, and BSAI flathead sole, rock sole, and yellowfin sole to the Amendment 80 sector is established in Tables 33 and 34 to 50 CFR part 679 and in § 679.91.

Two Amendment 80 cooperatives have formed for the 2017 fishing year. Because all Amendment 80 vessels are part of a cooperative, no allocation to the Amendment 80 limited access sector is required. NMFS will post 2017 Amendment 80 cooperative allocations on the Alaska Region Web site at *http://alaskafisheries.noaa.gov* prior to the start of the fishing year on January 1, 2017, based on the harvest specifications effective on that date.

The 2018 allocations for Amendment 80 species between Amendment 80 cooperatives and the Amendment 80 limited access sector will not be known until eligible participants apply for participation in the program by November 1, 2017. NMFS will post 2018 Amendment 80 cooperatives and Amendment 80 limited access allocations on the Alaska Region Web site at *http://alaskafisheries.noaa.gov* prior to the start of the fishing year on January 1, 2018, based on the harvest specifications effective on that date. Table 6 lists the proposed 2017 and 2018 allocations of the AI Pacific ocean perch, and BSAI flathead sole, rock sole, and yellowfin sole TACs.

TABLE 6—PROPOSED 2017 AND 2018 COMMUNITY DEVELOPMENT QUOTA (CDQ) RESERVES, INCIDENTAL CATCH AMOUNTS (ICAS), AND AMENDMENT 80 ALLOCATIONS OF THE ALEUTIAN ISLANDS PACIFIC OCEAN PERCH, AND BSAI FLATHEAD SOLE, ROCK SOLE, AND YELLOWFIN SOLE TACS

[Amounts are in metric tons]

Sector	2017 and 2018 allocations					
	Pacific ocean perch			Flathead sole	Rock sole	Yellowfin sole
	Eastern Aleutian district	Central Aleutian district	Western Aleutian district	BSAI	BSAI	BSAI
TAC	7,537	7,000	9,000	21,000	57,100	144,000
CDQ	806	749	963	2,247	6,110	15,408

TABLE 6—PROPOSED 2017 AND 2018 COMMUNITY DEVELOPMENT QUOTA (CDQ) RESERVES, INCIDENTAL CATCH AMOUNTS (ICAS), AND AMENDMENT 80 ALLOCATIONS OF THE ALEUTIAN ISLANDS PACIFIC OCEAN PERCH, AND BSAI FLATHEAD SOLE, ROCK SOLE, AND YELLOWFIN SOLE TACS—Continued

[Amounts are in metric tons]

Sector	2017 and 2018 allocations					
	Pacific ocean perch			Flathead sole	Rock sole	Yellowfin sole
	Eastern Aleutian district	Central Aleutian district	Western Aleutian district	BSAI	BSAI	BSAI
ICA	100	60	10	4,000	5,000	4,500
BSAI trawl limited access	663	619	161	0	0	14,579
Amendment 80	5,967	5,572	7,866	14,753	45,990	109,513
Alaska Groundfish Cooperative for 2017 [1]	3,164	2,954	4,171	1,513	11,377	43,510
Alaska Seafood Cooperative for 2017 [1]	2,803	2,617	3,695	13,240	34,614	66,003

[1] The 2018 allocations for Amendment 80 species between Amendment 80 cooperatives and the Amendment 80 limited access sector will not be known until eligible participants apply for participation in the program by November 1, 2017.

Section 679.2 defines the ABC surplus for flathead sole, rock sole, and yellowfin sole as the difference between the annual ABC and TAC for each species. Section 679.20(b)(1)(iii) establishes ABC reserves for flathead sole, rock sole, and yellowfin sole. The ABC surpluses and the ABC reserves are necessary to mitigate the operational variability, environmental conditions, and economic factors that may constrain the CDQ groups and the Amendment 80 cooperatives from achieving, on a continuing basis, the optimum yield in the BSAI groundfish fisheries. NMFS, after consultation with the Council, may set the ABC reserve at or below the ABC surplus for each species thus maintaining the TAC below ABC limits. An amount equal to 10.7 percent of the ABC reserves will be allocated as CDQ reserves for flathead sole, rock sole, and yellowfin sole. The Amendment 80 ABC reserves shall be the ABC reserves minus the CDQ ABC reserves. Section 679.91(i)(2) establishes each Amendment 80 cooperative ABC reserve to be the ratio of each cooperatives' quota share units and the total Amendment 80 quota share units, multiplied by the Amendment 80 ABC reserve for each respective species. Table 7 lists the 2017 and 2018 ABC surplus and ABC reserves for BSAI flathead sole, rock sole, and yellowfin sole.

TABLE 7—PROPOSED 2017 AND 2018 ABC SURPLUS, COMMUNITY DEVELOPMENT QUOTA (CDQ) ABC RESERVES, AND AMENDMENT 80 ABC RESERVES IN THE BSAI FOR FLATHEAD SOLE, ROCK SOLE, AND YELLOWFIN SOLE

[Amounts are in metric tons]

Sector	Flathead sole	Rock sole	Yellowfin sole
ABC	64,580	145,000	203,500
TAC	21,000	57,100	144,000
ABC surplus	43,580	87,900	59,500
ABC reserve	43,580	87,900	59,500
CDQ ABC reserve	4,663	9,405	6,367
Amendment 80 ABC reserve	38,917	78,495	53,134
Alaska Groundfish Cooperative for 2017 [1]	3,992	19,417	21,112
Alaska Seafood Cooperative for 2017 [1]	34,925	59,077	32,022

[1] The 2018 allocations for Amendment 80 species between Amendment 80 cooperatives and the Amendment 80 limited access sector will not be known until eligible participants apply for participation in the program by November 1, 2017.

Proposed PSC Limits for Halibut, Salmon, Crab, and Herring

Section 679.21(b), (e), (f), and (g) sets forth the BSAI PSC limits. Pursuant to § 679.21(b)(1), the 2017 and 2018 BSAI halibut PSC limits total 3,515 mt. Section 679.21(b)(1) allocates 315 mt of the halibut PSC limit as the PSQ reserve for use by the groundfish CDQ program, 1,745 mt of halibut PSC limit for the Amendment 80 sector, 745 mt of halibut PSC limit for the BSAI trawl limited access sector, and 710 mt of halibut mortality for the BSAI non-trawl sector.

Section 679.21(b)(1)(iii)(A) and (B) authorizes apportionment of the non-trawl halibut PSC limit into PSC allowances among six fishery categories, and § 679.21(b)(1)(ii)(A) and (B) and §§ 679.21(e)(3)(i)(B) and 679.21(e)(3)(iv) require apportionment of the BSAI trawl limited access halibut and crab PSC limits into PSC allowances among seven fishery categories. Table 10 lists the fishery PSC allowances for the BSAI trawl limited access fisheries, and Table 11 lists the fishery PSC allowances for the non-trawl fisheries.

Pursuant to Section 3.6 of the FMP, the Council recommends, and NMFS agrees, that certain specified non-trawl fisheries be exempt from the halibut PSC limit. As in past years, after consultation with the Council, NMFS exempts pot gear, jig gear, and the sablefish IFQ hook-and-line gear fishery categories from halibut bycatch restrictions for the following reasons: (1) The pot gear fisheries have low halibut bycatch mortality; (2) NMFS estimates halibut mortality for the jig gear fleet to be negligible because of the small size of the fishery and the selectivity of the gear; and (3) the sablefish and halibut IFQ fisheries have low halibut bycatch mortality because the IFQ program requires legal-size halibut to be retained by vessels using hook-and-line gear if a halibut IFQ permit holder or a hired master is aboard and is holding unused halibut IFQ (subpart D of 50 CFR part

679). As of November 2016, total groundfish catch for the pot gear fishery in the BSAI was 43,079 mt, with an associated halibut bycatch mortality of 2 mt.

The 2016 jig gear fishery harvested about 47 mt of groundfish. Most vessels in the jig gear fleet are exempt from observer coverage requirements. As a result, observer data are not available on halibut bycatch in the jig gear fishery. However, as mentioned above, NMFS estimates a negligible amount of halibut bycatch mortality because of the selective nature of jig gear and the low mortality rate of halibut caught with jig gear and released.

Under § 679.21(f)(2), NMFS annually allocates portions of either 33,318, 45,000, 47,591, or 60,000 Chinook salmon PSC limits among the AFA sectors, depending on past bycatch performance, on whether Chinook salmon bycatch incentive plan agreements (IPAs) are formed, and on whether NMFS determines it is a low Chinook salmon abundance year. NMFS will determine that it is a low Chinook salmon abundance year when abundance of Chinook salmon in western Alaska is less than or equal to 250,000 Chinook salmon. The State of Alaska provides to NMFS an estimate of Chinook salmon abundance using the 3-System Index for western Alaska based on the Kuskokwim, Unalakleet, and Upper Yukon aggregate stock grouping.

If an AFA sector participates in an approved IPA and it is not a low Chinook salmon abundance year, then NMFS will allocate a portion of the 60,000 PSC limit to that sector as specified in § 679.21(f)(3)(iii)(A). If no IPA is approved, or if the sector has exceeded its performance standard under § 679.21(f)(6), and it is not a low abundance year, NMFS will allocate a portion of the 47,591 Chinook salmon PSC limit to that sector as specified in § 679.21(f)(3)(iii)(C). If an AFA sector participates in an approved IPA in a low abundance year, then NMFS will allocate a portion of the 45,000 PSC limit to that sector as specified in § 679.21(f)(3)(iii)(B). If no IPA is approved, or if the sector has exceeded its performance standard under § 679.21(f)(6) in a low abundance year, NMFS will allocate a portion of the 33,318 Chinook salmon PSC limit to that sector as specified in § 679.21(f)(3)(iii)(D).

As of October 1, 2016, NMFS has determined that it is not a low Chinook salmon abundance year based on the State of Alaska's estimate that Chinook salmon abundance in western Alaska is greater than 250,000 Chinook salmon. Therefore, in 2017, the Chinook salmon PSC limit is 60,000, and the AFA sector Chinook salmon allocations are seasonally allocated with 70 percent of the allocation for the A season pollock fishery, and 30 percent of the allocation for the B season pollock fishery as stated in § 679.21(f)(3)(iii)(A). Additionally, in 2017, the Chinook salmon bycatch performance standard under § 679.21(f)(6) is 47,591 Chinook salmon, allocated to each sector as specified in § 679.21(f)(3)(iii)(C).

The basis for these PSC limits is described in detail in the final rule implementing management measures for Amendment 91 (75 FR 53026, August 30, 2010) and Amendment 110 (81 FR 37534, June 10, 2016). NMFS publishes the approved IPAs, allocations, and reports at *http://alaskafisheries.noaa.gov/sustainablefisheries/bycatch/default.htm.*

Section 679.21(g)(2)(i) specifies 700 fish as the 2017 and 2018 Chinook salmon PSC limit for the AI subarea pollock fishery. Section 679.21(g)(2)(ii) allocates 7.5 percent, or 53 Chinook salmon, as the AI subarea PSQ for the CDQ program and allocates the remaining 647 Chinook salmon to the non-CDQ fisheries.

Section 679.21(f)(14)(i) specifies 42,000 fish as the 2017 and 2018 non-Chinook salmon PSC limit in the Catcher Vessel Operational Area (CVOA). Section 679.21(f)(14)(ii) allocates 10.7 percent, or 4,494, non-Chinook salmon in the CVOA as the PSQ for the CDQ program, and allocates the remaining 37,506 non-Chinook salmon to the non-CDQ fisheries.

PSC limits for crab and herring are specified annually based on abundance and spawning biomass. Due to the lack of new information as of October 2016 regarding herring PSC limits and apportionments, the Council recommended and NMFS proposes basing the herring 2017 and 2018 PSC limits and apportionments on the 2015 survey data. The Council will reconsider these amounts in December 2016.

Section 679.21(e)(3)(i)(A)(*1*) allocates 10.7 percent of each trawl gear PSC limit specified for crab as a PSQ reserve for use by the groundfish CDQ program.

Based on 2016 survey data, the red king crab mature female abundance is estimated at 22.8 million red king crabs, which is above the threshold of 8.4 million red king crabs, and the effective spawning biomass is estimated at 42.2 million lbs (19,148 mt). Based on the criteria set out at § 679.21(e)(1)(i), the proposed 2017 and 2018 PSC limit of red king crab in Zone 1 for trawl gear is 97,000 animals. This limit derives from the mature female abundance estimate of more than 8.4 million red king crab and the effective spawning biomass estimate of more than 14.5 million lbs (6,577 mt) but less than 55 million lbs (24,948 mt).

Section 679.21(e)(3)(ii)(B)(*2*) establishes criteria under which NMFS must specify an annual red king crab bycatch limit for the Red King Crab Savings Subarea (RKCSS). The regulations limit the RKCSS to up to 25 percent of the red king crab PSC allowance based on the need to optimize the groundfish harvest relative to red king crab bycatch. NMFS proposes the Council's recommendation that the red king crab bycatch limit be equal to 25 percent of the red king crab PSC allowance within the RKCSS (Table 9).

Based on 2016 survey data, Tanner crab (*Chionoecetes bairdi*) abundance is estimated at 285 million animals. Pursuant to criteria set out at § 679.21(e)(1)(ii), the calculated 2017 and 2018 *C. bairdi* crab PSC limit for trawl gear is 830,000 animals in Zone 1, and 2,070,000 animals in Zone 2. In Zone 1, *C. bairdi* abundance was estimated to be greater than 270 million and less than 400 million animals. In Zone 2, *C. bairdi* abundance was estimated to be greater than 175 million animals and less than 290 million animals.

Pursuant to § 679.21(e)(1)(iii), the PSC limit for snow crab (*C. opilio*) is based on total abundance as indicated by the NMFS annual bottom trawl survey. The *C. opilio* crab PSC limit in the *C. opilio* bycatch limitation zone (COBLZ) is set at 0.1133 percent of the Bering Sea abundance index minus 150,000 crabs. Based on the 2016 survey estimate of 8.169 billion animals, the calculated *C. opilio* crab PSC limit is 9,105,477 animals.

Pursuant to § 679.21(e)(1)(v), the PSC limit of Pacific herring caught while conducting any trawl operation for BSAI groundfish is 1 percent of the annual eastern Bering Sea herring biomass. The best estimate of 2017 and 2018 herring biomass is 263,098 mt. This amount was developed by the Alaska Department of Fish and Game based on spawning location estimates. Therefore, the herring PSC limit proposed for 2017 and 2018 is 2,631 mt for all trawl gear as listed in Tables 8 and 9.

Section 679.21(e)(3)(i)(A) requires PSQ reserves to be subtracted from the total trawl PSC limits. The amount of the 2017 PSC limits assigned to the Amendment 80 and BSAI trawl limited access sectors are specified in Table 35 to 50 CFR part 679. The resulting allocations of PSC limits to CDQ PSQ, the Amendment 80 sector, and the BSAI

trawl limited access sector are listed in Table 8. Pursuant to § 679.21(b)(1)(i), § 679.21(e)(3)(vi), and § 679.91(d) through (f), crab and halibut trawl PSC limits established for the Amendment 80 sector are then further established for Amendment 80 cooperatives as PSC cooperative quota as listed in Table 12. Two Amendment 80 cooperatives have formed for the 2017 fishing year. Because all Amendment 80 vessels are part of a cooperative, no allocation to the Amendment 80 limited access sector is required. NMFS will post 2017 Amendment 80 cooperative allocations on the Alaska Region Web site at *http://alaskafisheries.noaa.gov* prior to the start of the fishing year on January 1, 2017, based on the harvest specifications effective on that date.

The 2018 PSC limit allocations between Amendment 80 cooperatives and the Amendment 80 limited access sector will not be known until eligible participants apply for participation in the program by November 1, 2017. NMFS will post 2018 Amendment 80 cooperatives and Amendment 80 limited access allocations on the Alaska Region Web site at *http://alaskafisheries.noaa.gov* prior to the start of the fishing year on January 1, 2018, based on the harvest specifications effective on that date.

Section 679.21(b)(2) and (e)(5) authorizes NMFS, after consulting with the Council, to establish seasonal apportionments of PSC amounts for the BSAI trawl limited access and Amendment 80 limited access sectors to maximize the ability of the fleet to harvest the available groundfish TAC and to minimize bycatch. The factors considered are (1) seasonal distribution of prohibited species, (2) seasonal distribution of target groundfish species, (3) PSC bycatch needs on a seasonal basis relevant to prohibited species biomass, (4) expected variations in bycatch rates throughout the year, (5) expected changes in directed groundfish fishing seasons, (6) expected start of fishing effort, and (7) economic effects of seasonal PSC apportionments on industry sectors. The Council recommended and NMFS proposes the seasonal PSC apportionments in Table 10 to maximize harvest among gear types, fisheries, and seasons while minimizing bycatch of PSC based on the above criteria.

TABLE 8—PROPOSED 2017 AND 2018 APPORTIONMENT OF PROHIBITED SPECIES CATCH ALLOWANCES TO NON-TRAWL GEAR, THE CDQ PROGRAM, AMENDMENT 80, AND THE BSAI TRAWL LIMITED ACCESS SECTORS

PSC species and area [1]	Non-trawl PSC	Total trawl PSC	Trawl PSC remaining after CDQ PSQ	CDQ PSQ reserve [2]	Amendment 80 sector	BSAI trawl limited access fishery
Halibut mortality (mt) BSAI	710	2,805	n/a	315	1,745	745
Herring (mt) BSAI	n/a	2,631	n/a	n/a	n/a	n/a
Red king crab (animals) Zone 1	n/a	97,000	86,621	10,379	43,293	26,489
C. opilio (animals) COBLZ	n/a	9,105,477	8,131,191	974,286	3,996,480	2,613,365
C. bairdi crab (animals) Zone 1	n/a	830,000	741,190	88,810	312,115	348,285
C. bairdi crab (animals) Zone 2	n/a	2,070,000	1,848,510	221,490	437,542	865,288

[1] Refer to § 679.2 for definitions of zones.
[2] The PSQ reserve for crab species is 10.7 percent of each crab PSC limit.

TABLE 9—PROPOSED 2017 AND 2018 HERRING AND RED KING CRAB SAVINGS SUBAREA PROHIBITED SPECIES CATCH ALLOWANCES FOR ALL TRAWL SECTORS

Fishery categories	Herring (mt) BSAI	Red king crab (animals) Zone 1
Yellowfin sole	179	n/a
Rock sole/flathead sole/other flatfish [1]	29	n/a
Greenland turbot/arrowtooth flounder/Kamchatka flounder/sablefish	19	n/a
Rockfish	13	n/a
Pacific cod	40	n/a
Midwater trawl pollock	2,151	n/a
Pollock/Atka mackerel/other species [2 3]	199	n/a
Red king crab savings subarea non-pelagic trawl gear [4]	n/a	24,250
Total trawl PSC	2,631	97,000

[1] "Other flatfish" for PSC monitoring includes all flatfish species, except for halibut (a prohibited species), arrowtooth flounder, flathead sole, Greenland turbot, Kamchatka flounder, rock sole, and yellowfin sole.
[2] Pollock other than midwater trawl pollock, Atka mackerel, and "other species" fishery category.
[3] "Other species" for PSC monitoring includes sculpins, sharks, skates, squids, and octopuses.
[4] In October 2016 the Council recommended that the red king crab bycatch limit for non-pelagic trawl fisheries within the RKCSS be limited to 25 percent of the red king crab PSC allowance (see § 679.21(e)(3)(ii)(B)(*2*)).
Note: Species apportionments may not total precisely due to rounding.

TABLE 10–PROPOSED 2017 AND 2018 PROHIBITED SPECIES BYCATCH ALLOWANCES FOR THE BSAI TRAWL LIMITED ACCESS SECTOR

BSAI trawl limited access fisheries	Prohibited species and area [1]				
	Halibut mortality (mt) BSAI	Red king crab (animals) Zone 1	*C. opilio* (animals) COBLZ	*C. bairdi* (animals)	
				Zone 1	Zone 2
Yellowfin sole	150	23,338	2,463,587	293,234	826,258
Rock sole/flathead sole/other flatfish [2]	0	0		0	
Greenland turbot/arrowtooth flounder/Kamchatka flounder/sablefish	0	0		0	
Rockfish April 15–December 31	4	0	4,069	0	697
Pacific cod	391	2,954	105,008	50,816	34,848
Pollock/Atka mackerel/other species [3]	200	197	40,701	4,235	3,485
Total BSAI trawl limited access PSC	745	26,489	2,613,365	348,285	865,288

[1] Refer to § 679.2 for definitions of areas.
[2] "Other flatfish" for PSC monitoring includes all flatfish species, except for halibut (a prohibited species), arrowtooth flounder, flathead sole, Greenland turbot, Kamchatka flounder, rock sole, and yellowfin sole.
[3] "Other species" for PSC monitoring includes sculpins, sharks, skates, squids, and octopuses.
Note: Species apportionments may not total precisely due to rounding.

TABLE 11—PROPOSED 2017 AND 2018 HALIBUT PROHIBITED SPECIES BYCATCH ALLOWANCES FOR NON-TRAWL FISHERIES

Halibut mortality (mt) BSAI				
Non-trawl fisheries	Seasons	Catcher/processor	Catcher vessel	All non-trawl
Pacific cod	Annual Pacific cod	648	13	n/a
	January 1–June 10	388	9	n/a
	June 10–August 15	162	2	n/a
	August 15–December 31	98	2	n/a
Non-Pacific cod non-trawl—Total	May 1–December 31	n/a	n/a	49
Groundfish pot and jig	n/a	n/a	n/a	Exempt
Sablefish hook-and-line	n/a	n/a	n/a	Exempt
Total for all non-trawl PSC	n/a	n/a	n/a	710

TABLE 12—PROPOSED 2017 PROHIBITED SPECIES BYCATCH ALLOWANCE FOR THE BSAI AMENDMENT 80 COOPERATIVES

Cooperative	Prohibited species and zones [1]				
	Halibut mortality (mt) BSAI	Red king crab (animals) Zone 1	*C. opilio* (animals) COBLZ	*C. bairdi* (animals)	
				Zone 1	Zone 2
Alaska Groundfish Cooperative	474	12,459	1,258,109	82,136	112,839
Alaska Seafood Cooperative	1,271	30,834	2,738,371	229,979	324,703
Total	1,745	43,293	3,996,480	312,115	437,542

[1] Refer to § 679.2 for definitions of zones.

Halibut Discard Mortality Rates (DMRs)

To monitor halibut bycatch mortality allowances and apportionments, the Regional Administrator uses observed halibut incidental catch rates, halibut discard mortality rates (DMRs), and estimates of groundfish catch to project when a fishery's halibut bycatch mortality allowance or seasonal apportionment is reached. Halibut incidental catch rates are based on observers' estimates of halibut incidental catch in the groundfish fishery. DMRs are estimates of the proportion of incidentally caught halibut that do not survive after being returned to the sea. The cumulative halibut mortality that accrues to a particular halibut PSC limit is the product of a DMR multiplied by the estimated halibut PSC. DMRs are estimated using the best information available in conjunction with the annual BSAI stock assessment process. The DMR methodology and findings are included as an appendix to the annual BSAI groundfish SAFE report.

Historically, DMRs consisted of long-term averages of annual DMRs within target fisheries that were defined by management area, CDQ, gear, and target species. Since the late 1990s, halibut DMRs were calculated by the International Pacific Halibut Commission (IPHC), which then provided the estimates to the NMFS for application in managing halibut bycatch limits. DMRs specified through the Council process and used for catch accounting by NMFS have consisted of long-term averages of annual estimates within target fisheries that are defined by management area, CDQ, gear, and target species. Long-term averages are taken from annual estimates for the most recent ten-year period with the number of years with data to support

annual DMR estimates varying among fisheries. Fishery-specific DMRs, once calculated, have generally been put in place for three-year increments.

NMFS proposes to revise methods for estimating DMRs consistent with those methods developed by the halibut DMR working group and recommended by the Council at its October 2016 meeting. NMFS proposes for the 2017 and 2018 BSAI groundfish harvest specifications revised DMRs consistent with modified DMR estimation methodology. The proposed change will make the DMR process transparent, transferable, and allow for review by all agencies/entities involved. The Alaska Region will program the revised DMRs into its groundfish catch accounting system to monitor the 2017 and 2018 halibut bycatch allowances (see Tables 8, 10, 11, and 12). The DMRs proposed for 2017 and 2018 BSAI groundfish harvest specifications reflect an ongoing effort by the Council to improve the estimation of DMRs in the Alaska groundfish fisheries.

The halibut DMR working group, consisting of the IPHC, Council, and NMFS Alaska Region staff, recommended the following broad changes to the DMR estimation method: Implementation of sampling design consistent with sampling protocols used under the Observer Restructuring Program; categorization of data of halibut viability based on vessel operations (sorting and handling practices, gear type, and processing sector) rather than target fisheries; and revision of reference timeframes to obtain estimates that are more responsive to changes in how the groundfish fisheries are observed and managed. These recommendations, and others, are described below.

- Incorporate CDQ with non-CDQ in the calculation of the DMRs instead of the currently specified DMRs, which calculate DMRs separately for CDQ and non-CDQ. Regulations allow assignment of CDQ status to a haul up to two hours after completion of gear retrieval. Most vessels fishing under the CDQ program also participate in the non-CDQ fisheries. The size of the haul, fishing operations, and catch-handling process do not tend to differ compared to the non-CDQ fisheries. For this reason, CDQ is not a recommended aggregation factor for estimating DMRs under the revised estimation method.
- Revise the DMR estimation methodology for consistency with the sampling protocols instituted in 2013 through the restructured Observer Program. The Observer Program randomizes sampling of fishing trips within operational groupings, sampling of hauls within fishing trips, and sampling of biological data within hauls. Basing halibut DMR estimation on a sampling design consistent with Observer Program sampling protocols should reduce the potential for sampling bias, improve data on operational causes of variation in post-capture halibut viability, and promote the ability for NMFS to make timely improvements to halibut DMR estimation in the future.
- Incorporate the use of vessel operations into DMR estimation methodology. This incorporates data about the viability (likelihood to survive) of discarded halibut into DMR calculations. Data based on different vessel operational categories, such as sorting practices, handling practices, gear type, and processing sectors (*i.e.* CVs, CPs, and CVs delivering to motherships), provide better information on halibut viability. NMFS expects that incorporating this information into the DMR estimation methodology will yield a more precise estimate of actual mortality.
- Remove the use of target fishery. Fishery targets do not necessarily characterize statistical and/or vessel operational differences in the sampling or handling of halibut PSC. Using fishery target aggregations may have reduced the quality of DMR estimates due to small sample sizes or by combining vessel operations with very important differences in sampling and handling characteristics.
- Change the reference time-frame for DMR calculations. Rather than using 10-year average rates, the revised methodology estimates DMRs based on initial 3-year average rates. Using 2013 as the starting year is more responsive to, and better aligns DMR calculation methodology with, the 2013 restructured Observer Program's sampling protocols. Using 2013 as the base year, NMFS and the Council will evaluate the time frame each year. Evaluating the time frame each year will enable NMFS and the Council to update the methodology and the halibut DMRs based on the best available information.

The working group's discussion paper also included a comparison of the total amount of halibut mortality that accrues using current DMRs versus the working group's recommended DMRs. Calculating the 2015 halibut mortality using specified DMRs yielded 2,312 mt of halibut mortality, whereas using the recommended DMRs yielded 2,299 mt of halibut morality (a less than one-percent decrease). Calculating the 2016 halibut mortality (through September 2016) yielded 1,701 mt of halibut mortality, versus 1,663 mt of halibut mortality when applying the recommended DMRs (a two percent decrease).

These proposed estimation methods, and recommendations for 2017 and 2018 halibut DMRs, were presented to the Plan Team in September 2016. The Plan Team concurred with the revised methodology, as well as the working group's halibut DMR recommendations for 2017 and 2018. The Council agreed with these recommendations at the Council's October 2016 meeting. Additionally, in April 2016 the SSC reviewed the methodology and made a number of suggestions for improving and refining it. The working group has incorporated those suggestions into its DMR estimation methodology. The working group's discussion of the revised halibut DMR methodology, including the comparative assessment, is available from the Council (see **ADDRESSES**). Table 13 lists the proposed 2017 and 2018 DMRs.

TABLE 13—PROPOSED 2017 AND 2018 PACIFIC HALIBUT DISCARD MORTALITY RATES FOR THE BSAI

Gear	Sector	Groundfish fishery	Halibut discard mortality rate (percent)
Pelagic trawl	All	All	100
Non-pelagic trawl	Catcher/Processor and Mothership	All	85
Non-pelagic trawl	Catcher vessel	All	52
Hook-and-line	Catcher vessel	All	13
Hook-and-line	Catcher/Processor	All	8
Pot	All	All	5

Listed AFA Catcher/Processor Sideboard Limits

Pursuant to § 679.64(a), the Regional Administrator is responsible for restricting the ability of listed AFA catcher/processors to engage in directed fishing for groundfish species other than pollock, to protect participants in other groundfish fisheries from adverse effects resulting from the AFA and from fishery cooperatives in the directed pollock fishery. These restrictions are set out as ''sideboard'' limits on catch. The basis for these proposed sideboard limits is described in detail in the final rules implementing the major provisions of the AFA (67 FR 79692, December 30, 2002) and Amendment 80 (72 FR 52668, September 14, 2007). Table 14 lists the proposed 2017 and 2018 catcher/processor sideboard limits.

All harvests of groundfish sideboard species by listed AFA catcher/processors, whether as targeted catch or incidental catch, will be deducted from the sideboard limits in Table 14. However, groundfish sideboard species that are delivered to listed AFA catcher/processors by catcher vessels will not be deducted from the 2017 and 2018 sideboard limits for the listed AFA catcher/processors.

TABLE 14—PROPOSED 2017 AND 2018 BSAI GROUNDFISH SIDEBOARD LIMITS FOR LISTED AMERICAN FISHERIES ACT CATCHER/PROCESSORS (C/PS)

[Amounts are in metric tons]

Target species	Area	1995–1997			2017 and 2018 ITAC available to all trawl C/Ps [1]	2017 and 2018 AFA C/P sideboard limit
		Retained catch	Total catch	Ratio of retained catch to total catch		
Sablefish trawl	BS	8	497	0.016	447	7
	AI	0	145	0	302	0
Greenland turbot	BS	121	17,305	0.007	2,272	16
	AI	23	4,987	0.005	170	1
Arrowtooth flounder	BSAI	76	33,987	0.002	11,900	24
Kamchatka flounder	BSAI	76	33,987	0.002	4,250	9
Rock sole	BSAI	6,317	169,362	0.037	50,990	1,887
Flathead sole	BSAI	1,925	52,755	0.036	18,753	675
Alaska plaice	BSAI	14	9,438	0.001	12,325	12
Other flatfish	BSAI	3,058	52,298	0.058	2,125	123
Pacific ocean perch	BS	12	4,879	0.002	6,760	14
	Eastern AI	125	6,179	0.02	6,731	135
	Central AI	3	5,698	0.001	6,251	6
	Western AI	54	13,598	0.004	8,037	32
Northern rockfish	BSAI	91	13,040	0.007	3,825	27
Rougheye rockfish	EBS/EAI	50	2,811	0.018	85	2
	CAI/WAI	50	2,811	0.018	170	3
Shortraker rockfish	BSAI	50	2,811	0.018	170	3
Other rockfish	BS	18	621	0.029	276	8
	AI	22	806	0.027	468	13
Atka mackerel	Central AI	n/a	n/a	0.115	14,288	1,643
	A season [2]	n/a	n/a	0.115	7,144	822
	B season [2]	n/a	n/a	0.115	7,144	822
	Western AI	n/a	n/a	0.2	9,377	1,875
	A season [2]	n/a	n/a	0.2	4,689	938
	B season [2]	n/a	n/a	0.2	4,689	938
Skates	BSAI	553	68,672	0.008	22,100	177
Sculpins	BSAI	553	68,672	0.008	3,825	31
Sharks	BSAI	553	68,672	0.008	106	1
Squids	BSAI	73	3,328	0.022	1,275	28
Octopuses	BSAI	553	68,672	0.008	340	3

[1] Aleutians Islands Pacific ocean perch, and BSAI Atka mackerel, flathead sole, rock sole, and yellowfin sole are multiplied by the remainder of the TAC after the subtraction of the CDQ reserve under § 679.20(b)(1)(ii)(C).

[2] The seasonal apportionment of Atka mackerel in the open access fishery is 50 percent in the A season and 50 percent in the B season. Listed AFA catcher/processors are limited to harvesting no more than zero in the Eastern Aleutian District and Bering Sea subarea, 20 percent of the annual ITAC specified for the Western Aleutian District, and 11.5 percent of the annual ITAC specified for the Central Aleutian District.

Note: Section 679.64(a)(1)(v) exempts AFA catcher/processors from a yellowfin sole sideboard limit because the 2017 and 2018 aggregate ITAC of yellowfin sole assigned to the Amendment 80 sector and BSAI trawl limited access sector is greater than 125,000 mt.

Section 679.64(a)(2) and Tables 40 and 41 to 50 CFR part 679 establish a formula for calculating PSC sideboard limits for listed AFA catcher/processors. The basis for these sideboard limits is described in detail in the final rules implementing the major provisions of the AFA (67 FR 79692, December 30, 2002) and Amendment 80 (72 FR 52668, September 14, 2007).

PSC species listed in Table 15 that are caught by listed AFA catcher/processors participating in any groundfish fishery other than pollock will accrue against the proposed 2017 and 2018 PSC sideboard limits for the listed AFA catcher/processors. Section 679.21(b)(4)(iii) and (e)(3)(v) authorizes NMFS to close directed fishing for groundfish other than pollock for listed AFA catcher/processors once a proposed 2017 or 2018 PSC sideboard limit listed in Table 15 is reached.

Crab or halibut PSC caught by listed AFA catcher/processors while fishing for pollock will accrue against the PSC allowances annually specified for either the midwater pollock or the pollock/Atka mackerel/''other species'' fishery categories, according to § 679.21(b)(1)(ii)(B) and § 679.21(e)(3)(iv).

TABLE 15—PROPOSED 2017 AND 2018 BSAI PROHIBITED SPECIES SIDEBOARD LIMITS FOR AMERICAN FISHERIES ACT LISTED CATCHER/PROCESSORS

PSC species and area [1]	Ratio of PSC to total PSC	Proposed 2017 and 2018 PSC available to trawl vessels after subtraction of PSQ [2]	Proposed 2017 and 2018 C/P sideboard limit [2]
BSAI Halibut mortality	n/a	n/a	286
Red king crab Zone 1	0.007	86,621	606
C. opilio (COBLZ)	0.153	8,131,191	1,224,072
C. bairdi	n/a	n/a	n/a
Zone 1	0.14	741,190	103,767
Zone 2	0.05	1,848,510	92,426

[1] Refer to § 679.2 for definitions of areas.
[2] Halibut amounts are in metric tons of halibut mortality. Crab amounts are in numbers of animals.

AFA Catcher Vessel Sideboard Limits

Pursuant to § 679.64(b), the Regional Administrator is responsible for restricting the ability of AFA catcher vessels to engage in directed fishing for groundfish species other than pollock to protect participants in other groundfish fisheries from adverse effects resulting from the AFA and from fishery cooperatives in the directed pollock fishery. Section 679.64(b) establishes formulas for setting AFA catcher vessel groundfish and PSC sideboard limits for the BSAI. The basis for these sideboard limits is described in detail in the final rules implementing the major provisions of the AFA (67 FR 79692, December 30, 2002) and Amendment 80 (72 FR 52668, September 14, 2007). Tables 16 and 17 list the proposed 2017 and 2018 AFA catcher vessel sideboard limits.

All catch of groundfish sideboard species made by non-exempt AFA catcher vessels, whether as targeted catch or as incidental catch, will be deducted from the 2017 and 2018 sideboard limits listed in Table 16.

TABLE 16—PROPOSED 2017 AND 2018 BSAI GROUNDFISH SIDEBOARD LIMITS FOR AMERICAN FISHERIES ACT CATCHER VESSELS (CVS)

[Amounts are in metric tons]

Species	Fishery by area/gear/season	Ratio of 1995–1997 AFA CV catch to 1995–1997 TAC	2017 and 2018 initial TAC [1]	2017 and 2018 AFA catcher vessel sideboard limits
Pacific cod	BSAI	n/a	n/a	n/a
	Jig gear	0	3,144	0
	Hook-and-line CV	n/a	n/a	n/a
	Jan 1–Jun 10	0.0006	228	0
	Jun 10–Dec 31	0.0006	219	0
	Pot gear CV	n/a	n/a	n/a
	Jan 1–Jun 10	0.0006	9,587	6
	Sept 1–Dec 31	0.0006	9,211	6
	CV <60 ft LOA using hook-and-line or pot gear.	0.0006	4,476	3
	Trawl gear CV	n/a	n/a	n/a
	Jan 20–Apr 1	0.8609	36,732	31,623
	Apr 1–Jun 10	0.8609	5,460	4,701
	Jun 10–Nov 1	0.8609	7,446	6,410
Sablefish	BS trawl gear	0.0906	447	40
	AI trawl gear	0.0645	302	19
Greenland turbot	BS	0.0645	2,272	147
	AI	0.0205	170	3
Arrowtooth flounder	BSAI	0.069	11,900	821
Kamchatka flounder	BSAI	0.069	4,250	293
Rock sole	BSAI	0.0341	50,990	1,739
Flathead sole	BS trawl gear	0.0505	18,753	947
Alaska plaice	BSAI	0.0441	12,325	544
Other flatfish	BSAI	0.0441	2,125	94
Pacific ocean perch	BS	0.1	6,760	676
	Eastern AI	0.0077	6,731	52
	Central AI	0.0025	6,251	16
	Western AI	0	8,037	0
Northern rockfish	BSAI	0.0084	3,825	32
Rougheye rockfish	EBS/EAI	0.0037	85	0
	CAI/WAI	0.0037	170	1
Shortraker rockfish	BSAI	0.0037	170	1
Other rockfish	BS	0.0048	276	1
	AI	0.0095	468	4
Atka mackerel	Eastern AI/BS	n/a	25,451	n/a
	Jan 1–Jun 10	0.0032	12,726	41

TABLE 16—PROPOSED 2017 AND 2018 BSAI GROUNDFISH SIDEBOARD LIMITS FOR AMERICAN FISHERIES ACT CATCHER VESSELS (CVS)—Continued

[Amounts are in metric tons]

Species	Fishery by area/gear/season	Ratio of 1995–1997 AFA CV catch to 1995–1997 TAC	2017 and 2018 initial TAC [1]	2017 and 2018 AFA catcher vessel sideboard limits
	Jun 10–Nov 1	0.0032	12,726	41
	Central AI	n/a	14,288	n/a
	Jan 1–Jun 10	0.0001	7,144	1
	Jun 10–Nov 1	0.0001	7,144	1
	Western AI	n/a	9,377	n/a
	Jan 1–Jun 10	0	4,689	0
	Jun 10–Nov 1	0	4,689	0
Skates	BSAI	0.0541	22,100	1,196
Sculpins	BSAI	0.0541	3,825	207
Sharks	BSAI	0.0541	106	6
Squids	BSAI	0.3827	1,275	488
Octopuses	BSAI	0.0541	340	18

[1] Aleutians Islands Pacific ocean perch, Atka mackerel, flathead sole, rock sole, and yellowfin sole are multiplied by the remainder of the TAC of that species after the subtraction of the CDQ reserve under § 679.20(b)(1)(ii)(C).

Note: Section 679.64(b)(6) exempts AFA catcher vessels from a yellowfin sole sideboard limit because the 2017 and 2018 aggregate ITAC of yellowfin sole assigned to the Amendment 80 sector and BSAI trawl limited access sector is greater than 125,000 mt.

Halibut and crab PSC limits listed in Table 17 that are caught by AFA catcher vessels participating in any groundfish fishery other than pollock will accrue against the 2017 and 2018 PSC sideboard limits for the AFA catcher vessels. Section 679.21(b)(4)(iii), (e)(7), and (e)(3)(v) authorizes NMFS to close directed fishing for groundfish other than pollock for AFA catcher vessels once a proposed 2017 and 2018 PSC sideboard limit listed in Table 17 is reached. The PSC that is caught by AFA catcher vessels while fishing for pollock in the Bering Sea subarea will accrue against the bycatch allowances annually specified for either the midwater pollock or the pollock/Atka mackerel/''other species'' fishery categories under § 679.21(b)(1)(ii)(B) and § 679.21(e)(3)(iv).

TABLE 17—PROPOSED 2017 AND 2018 AMERICAN FISHERIES ACT CATCHER VESSEL PROHIBITED SPECIES CATCH SIDEBOARD LIMITS FOR THE BSAI [1]

PSC species and area [1]	Target fishery category [2]	AFA catcher vessel PSC sideboard limit ratio	Proposed 2017 and 2018 PSC limit after subtraction of PSQ reserves [3]	Proposed 2017 and 2018 AFA catcher vessel PSC sideboard limit [3]
Halibut	Pacific cod trawl	n/a	n/a	887
	Pacific cod hook-and-line or pot	n/a	n/a	2
	Yellowfin sole total	n/a	n/a	101
	Rock sole/flathead sole/other flatfish [4]	n/a	n/a	228
	Greenland turbot/arrowtooth/Kamchatka flounder/sablefish	n/a	n/a	0
	Rockfish	n/a	n/a	2
	Pollock/Atka mackerel/other species [5]	n/a	n/a	5
Red king crab Zone 1	n/a	0.299	86,621	25,900
C. opilio COBLZ	n/a	0.168	8,131,191	1,366,040
C. bairdi Zone 1	n/a	0.33	741,190	244,593
C. bairdi Zone 2	n/a	0.186	1,848,510	343,823

[1] Refer to § 679.2 for definitions of areas.
[2] Target fishery categories are defined at § 679.21(b)(1)(ii)(B).
[3] Halibut amounts are in metric tons of halibut mortality. Crab amounts are in numbers of animals.
[4] ''Other flatfish'' for PSC monitoring includes all flatfish species, except for halibut (a prohibited species), arrowtooth flounder, flathead sole, Greenland turbot, rock sole, and yellowfin sole.
[5] ''Other species'' for PSC monitoring includes skates, sculpins, sharks, and octopuses.

Classification

NMFS has determined that the proposed harvest specifications are consistent with the FMP and preliminarily determined that the proposed harvest specifications are consistent with the Magnuson-Stevens Act and other applicable laws, and subject to further review after public comment.

This action is authorized under 50 CFR 679.20 and is exempt from review under Executive Orders 12866 and 13563.

NMFS prepared an EIS for this action and made it available to the public on January 12, 2007 (72 FR 1512). On February 13, 2007, NMFS issued the Record of Decision (ROD) for the Final EIS. A Supplemental Information Report (SIR) that assesses the need to prepare a Supplemental EIS is being prepared for the final action. Copies of the Final EIS, ROD, and SIR for this action are available from NMFS (see **ADDRESSES**). The Final EIS analyzes the environmental consequences of the proposed groundfish harvest

specifications and alternative harvest strategies on resources in the action area. The Final EIS found no significant environmental consequences from the proposed action or its alternatives.

NMFS prepared an Initial Regulatory Flexibility Analysis (IRFA), as required by section 603 of the Regulatory Flexibility Act (RFA), analyzing the methodology for establishing the relevant TACs. The IRFA evaluates the impacts on small entities of alternative harvest strategies for the groundfish fisheries in the exclusive economic zone off Alaska. As set forth in the methodology, TACs are set to a level that falls within the range of ABCs recommended by the SSC; the sum of the TACs must achieve OY specified in the FMP. While the specific numbers that the methodology may produce vary from year to year, the methodology itself remains constant.

A description of the proposed action, why it is being considered, and the legal basis for this proposed action are contained in the preamble above. A copy of the analysis is available from NMFS (see **ADDRESSES**). A summary of the IRFA follows.

The action under consideration is a harvest strategy to govern the catch of groundfish in the BSAI. The preferred alternative is the existing harvest strategy in which TACs fall within the range of ABCs recommended by the SSC, but, as discussed below, NMFS considered other alternatives. This action is taken in accordance with the FMP prepared by the Council pursuant to the Magnuson-Stevens Act.

The entities directly regulated by this action are those that harvest groundfish in the exclusive economic zone of the BSAI and in parallel fisheries within State waters. These include entities operating catcher vessels and catcher/processors within the action area and entities receiving direct allocations of groundfish.

For RFA purposes only, NMFS has established a small business size standard for businesses, including their affiliates, whose primary industry is commercial fishing (see 50 CFR 200.2). A business primarily engaged in commercial fishing (NAICS code 11411) is classified as a small business if it is independently owned and operated, is not dominant in its field of operation (including its affiliates), and has combined annual receipts not in excess of $11 million for all its affiliated operations worldwide.

The estimated directly regulated small entities in 2015 include approximately 152 catcher vessels, four catcher/processors, and six CDQ groups. Some of these vessels are members of AFA inshore pollock cooperatives, Gulf of Alaska rockfish cooperatives, or BSAI Crab Rationalization Program cooperatives, and, since under the RFA it is the aggregate gross receipts of all participating members of the cooperative that must meet the ''under $11 million'' threshold, they are considered to be large entities within the meaning of the RFA. Thus, the estimate of 152 catcher vessels may be an overstatement of the number of small entities. Average gross revenues were $520,000 for small hook-and-line vessels, $1.29 million for small pot vessels, and $2.99 million for small trawl vessels. Revenue data for catcher/processors is confidential; however, in 2015, NMFS estimates that there were four catcher/processor small entities with gross receipts less than $11 million.

The preferred alternative (Alternative 2) was compared to four other alternatives. Alternative 1 would have set TACs to generate fishing rates equal to the maximum permissible ABC (if the full TAC were harvested), unless the sum of TACs exceeded the BSAI OY, in which case TACs would have been limited to the OY. Alternative 3 would have set TACs to produce fishing rates equal to the most recent 5-year average fishing rates. Alternative 4 would have set TACs equal to the lower limit of the BSAI OY range. Alternative 5, the ''no action'' alternative, would have set TACs equal to zero.

The TACs associated with the preferred harvest strategy are those adopted by the Council in October 2016, as per Alternative 2. OFLs and ABCs for the species were based on recommendations prepared by the Council's BSAI Groundfish Plan Team in September 2016, and reviewed and modified by the Council's SSC in October 2016. The Council based its TAC recommendations on those of its AP, which were consistent with the SSC's OFL and ABC recommendations.

Alternative 1 selects harvest rates that would allow fishermen to harvest stocks at the level of ABCs, unless total harvests were constrained by the upper bound of the BSAI OY of two million mt. As shown in Table 1 of the preamble, the sum of ABCs in 2017 and 2018 would be about 3,128,135 mt, which falls above the upper bound of the OY range. The sum of TACs is equal to the sum of ABCs. In this instance, Alternative 1 is consistent with the preferred alternative (Alternative 2), meets the objectives of that action, and has small entity impacts that are equivalent to the preferred alternative.

Alternative 3 selects harvest rates based on the most recent 5 years of harvest rates (for species in Tiers 1 through 3) or for the most recent 5 years of harvests (for species in Tiers 4 through 6). This alternative is inconsistent with the objectives of this action, (the Council's preferred harvest strategy) because it does not take account of the most recent biological information for this fishery. NMFS annually conducts at-sea stock surveys for different species, as well as statistical modeling, to estimate stock sizes and permissible harvest levels. Actual harvest rates or harvest amounts are a component of these estimates, but in and of themselves may not accurately portray stock sizes and conditions. Harvest rates are listed for each species category for each year in the SAFE report (see **ADDRESSES**).

Alternative 4 would lead to significantly lower harvests of all species and reduce TACs from the upper end of the OY range in the BSAI, to its lower end of 1.4 million mt. Overall, this would reduce 2017 TACs by about 30 percent, which would lead to significant reductions in harvests of species by small entities. While reductions of this size would be associated with offsetting price increases, the size of these increases is very uncertain. While production declines in the BSAI would undoubtedly be associated with significant price increases in the BSAI, these increases would still be constrained by production of substitutes, and are very unlikely to offset revenue declines from smaller production. Thus, this alternative action would have a detrimental impact on small entities.

Alternative 5, which sets all harvests equal to zero, would have a significant adverse impact on small entities and would be contrary to obligations to achieve OY on a continuing basis, as mandated by the Magnuson-Stevens Act.

The proposed harvest specifications extend the current 2017 OFLs, ABCs, and TACs to 2017 and 2018. As noted in the IRFA, the Council may modify these OFLs, ABCs, and TACs in December 2016, when it reviews the November 2016 SAFE report from its groundfish Plan Team, and the December Council meeting reports of its SSC and AP. Because 2017 TACs in the proposed 2017 and 2018 harvest specifications are unchanged from the 2017 harvest specification TACs, NMFS does not expect adverse impacts on small entities. Also, NMFS does not expect any changes made by the Council in December 2016 to be large enough to have an impact on small entities.

This action does not modify recordkeeping or reporting requirements, or duplicate, overlap, or conflict with any Federal rules.

Adverse impacts on marine mammals resulting from fishing activities conducted under these harvest specifications are discussed in the Final EIS (see **ADDRESSES**), and in the 2016 SIR (*https://alaskafisheries.noaa.gov/sites/default/files/sir-2016-17.pdf*).

Authority: 16 U.S.C. 773 *et seq.;* 16 U.S.C. 1540(f); 16 U.S.C. 1801 *et seq.;* 16 U.S.C. 3631 *et seq.;* Pub. L. 105–277; Pub. L. 106–31; Pub. L. 106–554; Pub. L. 108–199; Pub. L. 108–447; Pub. L. 109–241; Pub. L. 109–479.

Dated: November 30, 2016.

Samuel D. Rauch III,

Deputy Assistant Administrator for Regulatory Programs, National Marine Fisheries Service.

[FR Doc. 2016–29152 Filed 12–5–16; 8:45 am]

BILLING CODE 3510–22–P

DEPARTMENT OF COMMERCE

National Oceanic and Atmospheric Administration

50 CFR Part 679

[Docket No. 160920866–6999–01]

RIN 0648–XE904

Fisheries of the Exclusive Economic Zone Off Alaska; Gulf of Alaska; 2017 and 2018 Harvest Specifications for Groundfish

AGENCY: National Marine Fisheries Service (NMFS), National Oceanic and Atmospheric Administration (NOAA), Commerce.

ACTION: Proposed rule; request for comments.

SUMMARY: NMFS proposes 2017 and 2018 harvest specifications, apportionments, and Pacific halibut prohibited species catch limits for the groundfish fishery of the Gulf of Alaska (GOA). This action is necessary to establish harvest limits for groundfish during the 2017 and 2018 fishing years and to accomplish the goals and objectives of the Fishery Management Plan for Groundfish of the Gulf of Alaska. The intended effect of this action is to conserve and manage the groundfish resources in the GOA in accordance with the Magnuson-Stevens Fishery Conservation and Management Act.

DATES: Comments must be received by January 5, 2017.

ADDRESSES: You may submit comments on this document, identified by NOAA–NMFS–2016–0127, by any one of the following methods:

- *Electronic Submission:* Submit all electronic public comments via the Federal e-Rulemaking Portal. Go to *www.regulations.gov/#!docketDetail;D=NOAA-NMFS-2016-0127,* click the ''Comment Now!'' icon, complete the required fields, and enter or attach your comments.
- *Mail:* Submit written comments to Glenn Merrill, Assistant Regional Administrator, Sustainable Fisheries Division, Alaska Region NMFS, Attn: Ellen Sebastian. Mail comments to P.O. Box 21668, Juneau, AK 99802–1668.

Instructions: Comments sent by any other method, to any other address or individual, or received after the end of the comment period, may not be considered by NMFS. All comments received are a part of the public record and will generally be posted for public viewing on *www.regulations.gov* without change. All personal identifying information (*e.g.,* name, address), confidential business information, or otherwise sensitive information submitted voluntarily by the sender will be publicly accessible. NMFS will accept anonymous comments (enter ''N/A'' in the required fields if you wish to remain anonymous).

Electronic copies of the Alaska Groundfish Harvest Specifications Final Environmental Impact Statement (Final EIS), Record of Decision (ROD) for the Final EIS, Supplementary Information Report (SIR) to the Final EIS, and the Initial Regulatory Flexibility Analysis (IRFA) prepared for this action may be obtained from *http://www.regulations.gov* or from the Alaska Region Web site at *https://alaskafisheries.noaa.gov*. The final 2015 Stock Assessment and Fishery Evaluation (SAFE) report for the groundfish resources of the GOA, dated November 2015, is available from the North Pacific Fishery Management Council (Council) at 605 West 4th Avenue, Suite 306, Anchorage, AK 99501, phone 907–271–2809, or from the Council's Web site at *http://www.npfmc.org.* The draft 2016 SAFE report for the GOA will be available from the same source.

FOR FURTHER INFORMATION CONTACT: Obren Davis, 907–586–7228.

SUPPLEMENTARY INFORMATION: NMFS manages the GOA groundfish fisheries in the exclusive economic zone (EEZ) of the GOA under the Fishery Management Plan for Groundfish of the Gulf of Alaska (FMP). The Council prepared the FMP under the authority of the Magnuson-Stevens Fishery Conservation and Management Act (Magnuson-Stevens Act), 16 U.S.C. 1801, *et seq.* Regulations governing U.S. fisheries and implementing the FMP appear at 50 CFR parts 600, 679, and 680.

The FMP and its implementing regulations require NMFS, after consultation with the Council, to specify the total allowable catch (TAC) for each target species, the sum of which must be within the optimum yield (OY) range of 116,000 to 800,000 metric tons (mt) (§ 679.20(a)(1)(i)(B)). Section 679.20(c)(1) further requires NMFS to publish and solicit public comment on proposed annual TACs, Pacific halibut prohibited species catch (PSC) limits, and seasonal allowances of pollock and Pacific cod. The proposed harvest specifications in Tables 1 through 19 of this document satisfy these requirements. For 2017 and 2018, the sum of the proposed TAC amounts is 573,872 mt.

Under § 679.20(c)(3), NMFS will publish the final 2017 and 2018 harvest specifications after (1) considering comments received within the comment period (see **DATES**), (2) consulting with the Council at its December 2016 meeting, (3) considering information presented in the 2016 SIR that assesses the need to prepare a Supplemental EIS (see **ADDRESSES**), and (4) considering information presented in the final 2016 SAFE report prepared for the 2017 and 2018 groundfish fisheries.

Other Actions Potentially Affecting the 2017 and 2018 Harvest Specifications

Amendment 103: Chinook Salmon Prohibited Species Catch Limit Reapportionment Provisions for Trawl Sectors in the Western and Central GOA

In December 2015, the Council recommended for Secretarial review Amendment 103 to the FMP to reapportion unused Chinook salmon PSC limits among the GOA pollock and non-pollock trawl sectors. Amendment 103 allows NMFS to reapportion the Chinook salmon PSC limits established by Amendments 93 and 97 to prevent or limit fishery closures due to attainment of sector-specific Chinook salmon PSC limits, while maintaining the annual, combined 32,500 Chinook salmon PSC limit for all sectors. The Secretary approved Amendment 103 on August 24, 2016. The final rule implementing Amendment 103 published on September 12, 2016, (81 FR 62659) and became effective on October 12, 2016.

Amendment 101: Authorize Longline Pot Gear for Use in the Sablefish IFQ Fishery in the GOA

NMFS issued a proposed rule to implement Amendment 101 to the FMP

for the sablefish individual fishing quota (IFQ) fisheries in the GOA on August 19, 2016 (81 FR 55408). That proposed action would authorize the use of longline pot gear in the GOA sablefish IFQ fishery. The Secretary approved Amendment 101 on November 4, 2016. If NMFS approves the final rule, NMFS expects it would be effective for the 2017 GOA sablefish IFQ fishery.

Proposed Acceptable Biological Catch (ABC) and TAC Specifications

In October 2016, the Council, its Scientific and Statistical Committee (SSC), and its Advisory Panel (AP) reviewed the most recent biological and harvest information about the condition of groundfish stocks in the GOA. This information was compiled by the GOA Groundfish Plan Team (Plan Team) and presented in the final 2015 SAFE report for the GOA groundfish fisheries, dated November 2015 (see **ADDRESSES**). The SAFE report contains a review of the latest scientific analyses and estimates of each species' biomass and other biological parameters, as well as summaries of the available information on the GOA ecosystem and the economic condition of the groundfish fisheries off Alaska. From these data and analyses, the Plan Team estimates and the SSC sets an overfishing level (OFL) and ABC for each species or species group. The amounts proposed for the 2017 and 2018 OFLs and ABCs are based on the 2015 SAFE report. The AP and Council recommended that the proposed 2017 and 2018 TACs be set equal to proposed ABCs for all species and species groups, with the exception of the species categories further discussed below. The proposed OFLs, ABCs, and TACs could be changed in the final harvest specifications depending on the most recent scientific information contained in the final 2016 SAFE report. The draft stock assessments that will comprise, in part, the 2016 SAFE report are available at *http://www.afsc.noaa.gov/REFM/stocks/plan_team/draft_assessments.htm*.

In November 2016, the Plan Team will update the 2015 SAFE report to include new information collected during 2016, such as NMFS stock surveys, revised stock assessments, and catch data. The Plan Team will compile this information and produce the draft 2016 SAFE report for presentation at the December 2016 Council meeting. At that meeting, the Council will consider information in the draft 2016 SAFE report, recommendations from the November 2016 Plan Team meeting and December 2016 SSC and AP meetings, public testimony, and relevant written public comments in making its recommendations for the final 2017 and 2018 harvest specifications. Pursuant to § 679.20(a)(2) and (3), the Council could recommend adjusting the TACs if warranted on the biological condition of groundfish stocks or a variety of socioeconomic considerations; or if required in order to cause the sum to fall within the optimum yield range.

In previous years, the OFLs and ABCs that have had the most significant changes (relative to the amount of assessed tonnage of fish) from the proposed to the final harvest specifications have been for OFLs and ABCs that are based on the most recent NMFS stock surveys. These surveys provide updated estimates of stock biomass and spatial distribution, and changes to the models used for producing stock assessments. NMFS scientists presented updated and new survey results, changes to assessment models, and accompanying stock estimates at the September 2016 Plan Team meeting, and the SSC reviewed this information at the October 2016 Council meeting. The species with possible significant model changes are Pacific cod, pollock, sablefish, and sharks. In November 2016, the Plan Team considered updated stock assessments for groundfish, which will be included in the draft 2016 SAFE report.

If the draft 2016 SAFE report indicates that the stock biomass trend is increasing for a species, then the final 2017 and 2018 harvest specifications for that species may reflect an increase from the proposed harvest specifications. Conversely, if the draft 2016 SAFE report indicates that the stock biomass trend is decreasing for a species, then the final 2017 and 2018 harvest specifications may reflect a decrease from the proposed harvest specifications.

The proposed 2017 and 2018 OFLs, ABCs, and TACs are based on the best available biological and socioeconomic information, including projected biomass trends, information on assumed distribution of stock biomass, and revised methods used to calculate stock biomass. The FMP specifies the formulas, or tiers, to be used to compute OFLs and ABCs. The formulas applicable to a particular stock or stock complex are determined by the level of reliable information available to the fisheries scientists. This information is categorized into a successive series of six tiers to define OFL and ABC amounts, with Tier 1 representing the highest level of information quality available and Tier 6 representing the lowest level of information quality available. The Plan Team used the FMP tier structure to calculate OFLs and ABCs for each groundfish species. The SSC adopted the proposed 2017 and 2018 OFLs and ABCs recommended by the Plan Team for all groundfish species. The Council adopted the SSC's OFL and ABC recommendations and the AP's TAC recommendations. These amounts are unchanged from the final 2017 harvest specifications published in the **Federal Register** on March 18, 2016 (81 FR 14740).

Specification and Apportionment of TAC Amounts

The Council recommended proposed 2017 and 2018 TACs that are equal to proposed ABCs for all species and species groups, with the exception of shallow-water flatfish in the Western GOA, arrowtooth flounder, flathead sole in the Western and Central GOA, ''other rockfish'' in Southeast Outside (SEO) District, Atka mackerel, and Pacific cod. The shallow-water flatfish, arrowtooth flounder, and flathead sole TACs are set to allow for harvest opportunities while conserving the halibut PSC limit for use in other fisheries. The ''other rockfish'' TAC is set to reduce the potential amount of discards in the SEO District. The Atka mackerel TAC is set to accommodate incidental catch amounts of this species in other directed fisheries. The Pacific cod TACs are reduced from ABC amounts to accommodate the State waters Pacific cod fisheries. Similarly, the combined Western, Central, and West Yakutat pollock ABC is reduced to account for the State water pollock fishery. These reductions are described below.

The proposed 2017 and 2018 Pacific cod TACs are set to accommodate the State's guideline harvest levels (GHLs) for Pacific cod in State waters in the Western and Central Regulatory Areas, as well as in Prince William Sound (PWS). The Plan Team, SSC, AP, and Council recommended that the sum of all State and Federal water Pacific cod removals from the GOA not exceed ABC recommendations. Accordingly, the Council reduced the proposed 2017 and 2018 Pacific cod TACs in the Eastern, Central, and Western Regulatory Areas to account for State GHLs. Therefore, the proposed 2017 and 2018 Pacific cod TACs are less than the proposed ABCs by the following amounts: (1) Eastern GOA, 1,898 mt; (2) Central GOA, 10,653 mt; and (3) Western GOA, 10,499 mt. These amounts reflect the sum of the State's 2017 and 2018 GHLs in these areas, which are 25 percent of the Eastern and Central, and 30 percent of the Western GOA proposed ABCs.

The ABC for the pollock stock in the combined Western, Central, and West Yakutat Regulatory Areas (W/C/WYK) includes the amount for the GHL established by the State for the PWS pollock fishery. The Plan Team, SSC, AP, and Council recommended that the sum of all State and Federal water pollock removals from the GOA not exceed ABC recommendations. For 2017 and 2018, the SSC recommended and the Council approved the W/C/WYK pollock ABC, including the amount to account for the State's PWS GHL. At the November 2016 Plan Team meeting, State fisheries managers recommended setting the PWS GHL at 2.5 percent of the annual W/C/WYK pollock ABC. For 2017, this yields a PWS pollock GHL of 6,264 mt, a slight decrease from the 2016 PWS GHL of 6,358 mt. The proposed W/C/WYK 2017 and 2018 pollock ABC is 250,544 mt, and the proposed TAC is 244,280 mt.

Apportionments of pollock to the W/C/WYK management areas are considered to be ''apportionments of annual catch limit (ACLs)'' rather than ''ABCs.'' This more accurately reflects that such apportionments address management, rather than biological or conservation, concerns. In addition, apportioning ACLs in this manner allow NMFS to balance any transfer of TAC from one area to another pursuant to § 679.20(a)(5)(iv)(B) to ensure that the area-wide ACL and ABC are not exceeded.

NMFS' proposed apportionments for groundfish species are based on the distribution of biomass among the regulatory areas under which NMFS manages the species. Additional regulations govern the apportionment of pollock, Pacific cod, and sablefish. Additional detail on these apportionments are described below, and briefly summarized here.

NMFS proposes pollock TACs in the W/C/WYK and the SEO District of the GOA (see Table 1). NMFS also proposes seasonal apportionment of the annual pollock TAC in the Western and Central Regulatory Areas of the GOA among Statistical Areas 610, 620, and 630. These apportionments are divided equally among each of the following four seasons: The A season (January 20 through March 10), the B season (March 10 through May 31), the C season (August 25 through October 1), and the D season (October 1 through November 1) (§ 679.23(d)(2)(i) through (iv), and § 679.20(a)(5)(iv)(A) and (B)). Additional detail is provided below; Table 2 lists these amounts.

NMFS proposes Pacific cod TACs in the Western, Central, and Eastern GOA (see Table 1). NMFS also proposes seasonal apportionment of the Pacific cod TACs in the Western and Central Regulatory Areas. Sixty percent of the annual TAC is apportioned to the A season for hook-and-line, pot, or jig gear from January 1 through June 10, and for trawl gear from January 20 through June 10. Forty percent of the annual TAC is apportioned to the B season for jig gear from June 10 through December 31, for hook-and-line or pot gear from September 1 through December 31, and for trawl gear from September 1 through November 1 (§§ 679.23(d)(3) and 679.20(a)(12)). The Western and Central GOA Pacific cod TACs are allocated among various gear and operational sectors. Table 3 lists the amounts apportioned to each sector.

The Council's recommendation for sablefish area apportionments takes into account the prohibition on the use of trawl gear in the SEO District of the Eastern Regulatory Area and makes available 5 percent of the combined Eastern Regulatory Area ABCs to trawl gear for use as incidental catch in other groundfish fisheries in the WYK District (§ 679.20(a)(4)(i)). Additional detail is provided below; Tables 4 and 5 list these amounts.

For 2017 and 2018, the Council recommends and NMFS proposes the OFLs, ABCs, and TACs listed in Table 1. The proposed ABCs reflect harvest amounts that are less than the specified overfishing levels. Table 1 lists the proposed 2017 and 2018 OFLs, ABCs, TACs, and area apportionments of groundfish in the GOA. These amounts are consistent with the biological condition of groundfish stocks as described in the 2015 SAFE report, and adjusted for other biological and socioeconomic considerations, including maintaining the total TAC within the required OY range. The sum of the proposed TACs for all GOA groundfish is 573,872 mt for 2017 and 2018, which is within the OY range specified by the FMP. These proposed amounts and apportionments by area, season, and sector are subject to change pending consideration of the draft 2016 SAFE report and the Council's recommendations for the final 2017 and 2018 harvest specifications during its December 2016 meeting.

TABLE 1—PROPOSED 2017 AND 2018 ABCS, TACS, AND OFLS OF GROUNDFISH FOR THE WESTERN/CENTRAL/WEST YAKUTAT, WESTERN, CENTRAL, AND EASTERN REGULATORY AREAS, AND IN THE WEST YAKUTAT, SOUTHEAST OUTSIDE, AND GULFWIDE DISTRICTS OF THE GULF OF ALASKA

[Values are rounded to the nearest metric ton]

Species	Area [1]	OFL	ABC	TAC [2]
Pollock [2]	Shumagin (610)	n/a	55,657	55,657
	Chirikof (620)	n/a	123,078	123,078
	Kodiak (630)	n/a	56,336	56,336
	WYK (640)	n/a	9,209	9,209
	W/C/WYK (subtotal)	289,937	250,544	244,280
	SEO (650)	13,226	9,920	9,920
	Total	303,163	260,464	254,200
Pacific cod [3]	W	n/a	34,998	24,499
	C	n/a	42,610	31,958
	E	n/a	7,592	5,693
	Total	100,800	85,200	62,150
Sablefish [4]	W	n/a	1,163	1,163
	C	n/a	3,678	3,678
	WYK	n/a	1,348	1,348
	SEO	n/a	2,118	2,118

TABLE 1—PROPOSED 2017 AND 2018 ABCS, TACS, AND OFLS OF GROUNDFISH FOR THE WESTERN/CENTRAL/WEST YAKUTAT, WESTERN, CENTRAL, AND EASTERN REGULATORY AREAS, AND IN THE WEST YAKUTAT, SOUTHEAST OUTSIDE, AND GULFWIDE DISTRICTS OF THE GULF OF ALASKA—Continued

[Values are rounded to the nearest metric ton]

Species	Area [1]	OFL	ABC	TAC [2]
	E (WYK and SEO) (subtotal)	n/a	3,466	3,466
	Total	9,825	8,307	8,307
Shallow-water flatfish [5]	W	n/a	19,159	13,250
	C	n/a	17,680	17,680
	WYK	n/a	2,919	2,919
	SEO	n/a	1,006	1,006
	Total	50,220	40,764	34,855
Deep-water flatfish [6]	W	n/a	187	187
	C	n/a	3,516	3,516
	WYK	n/a	3,015	3,015
	SEO	n/a	2,563	2,563
	Total	11,168	9,281	9,281
Rex sole	W	n/a	1,318	1,318
	C	n/a	4,453	4,453
	WYK	n/a	767	767
	SEO	n/a	969	969
	Total	9,810	7,507	7,507
Arrowtooth flounder	W	n/a	28,659	14,500
	C	n/a	109,804	75,000
	WYK	n/a	37,999	6,900
	SEO	n/a	12,870	6,900
	Total	196,714	189,332	103,300
Flathead sole	W	n/a	11,080	8,650
	C	n/a	20,307	15,400
	WYK	n/a	2,944	2,944
	SEO	n/a	856	856
	Total	43,060	35,187	27,850
Pacific ocean perch [7]	W	n/a	2,709	2,709
	C	n/a	16,860	16,860
	WYK	n/a	2,818	2,818
	W/C/WYK	26,045	22,387	22,387
	SEO	2,096	1,802	1,802
	Total	28,141	24,189	24,189
Northern rockfish [8]	W	n/a	430	430
	C	n/a	3,338	3,338
	E	n/a	4	.....
	Total	4,501	3,768	3,768
Shortraker rockfish [9]	W	n/a	38	38
	C	n/a	301	301
	E	n/a	947	947
	Total	1,715	1,286	1,286
Dusky rockfish [10]	W	n/a	159	159
	C	n/a	3,791	3,791
	WYK	n/a	251	251
	SEO	n/a	83	83
	Total	5,253	4,284	4,284
Rougheye and blackspotted rockfish [11]	W	n/a	105	105
	C	n/a	705	705
	E	n/a	515	515

TABLE 1—PROPOSED 2017 AND 2018 ABCS, TACS, AND OFLS OF GROUNDFISH FOR THE WESTERN/CENTRAL/WEST YAKUTAT, WESTERN, CENTRAL, AND EASTERN REGULATORY AREAS, AND IN THE WEST YAKUTAT, SOUTHEAST OUTSIDE, AND GULFWIDE DISTRICTS OF THE GULF OF ALASKA—Continued

[Values are rounded to the nearest metric ton]

Species	Area [1]	OFL	ABC	TAC [2]
	Total	1,592	1,325	1,325
Demersal shelf rockfish [12]	SEO	364	231	231
Thornyhead rockfish [13]	W	n/a	291	291
	C	n/a	988	988
	E	n/a	682	682
	Total	2,615	1,961	1,961
Other rockfish [14 15]	W/C combined	n/a	1,534	1,534
	WYK	n/a	574	574
	SEO	n/a	3,665	200
	Total	7,424	5,773	2,308
Atka mackerel	GW	6,200	4,700	2,000
Big skates [16]	W	n/a	908	908
	C	n/a	1,850	1,850
	E	n/a	1,056	1,056
	Total	5,086	3,814	3,814
Longnose skates [17]	W	n/a	61	61
	C	n/a	2,513	2,513
	E	n/a	632	632
	Total	4,274	3,206	3,206
Other skates [18]	GW	2,558	1,919	1,919
Sculpins	GW	7,338	5,591	5,591
Sharks	GW	6,020	4,514	4,514
Squids	GW	1,530	1,148	1,148
Octopuses	GW	6,504	4,878	4,878
Total		815,875	708,629	573,872

[1] Regulatory areas and districts are defined at § 679.2. (W = Western Gulf of Alaska; C = Central Gulf of Alaska; E = Eastern Gulf of Alaska; WYK = West Yakutat District; SEO = Southeast Outside District; GW = Gulf-wide).

[2] The combined pollock ABC for the Western, Central, and West Yakutat areas is apportioned in the Western/Central Regulatory Areas among four statistical areas. These apportionments are considered subarea ACLs, rather than ABCs, for specification and reapportionment purposes. Table 2 lists the proposed 2017 and 2018 seasonal apportionments. In the West Yakutat and Southeast Outside Districts of the Eastern Regulatory Area, pollock is not divided into seasonal allowances.

[3] Section 679.20(a)(12)(i) requires the allocation of the Pacific cod TACs in the Western and Central Regulatory Areas of the GOA among gear and operational sectors. The annual Pacific cod TAC is apportioned among various sectors, 60 percent to the A season and 40 percent to the B season in the Western and Central Regulatory Areas of the GOA. In the Eastern Regulatory Area of the GOA, Pacific cod is allocated 90 percent for processing by the inshore component and 10 percent for processing by the offshore component. Table 3 lists the proposed 2017 and 2018 Pacific cod seasonal apportionments.

[4] Sablefish is allocated to hook-and-line and trawl gear in 2017 and trawl gear in 2018. Tables 4 and 5 list the proposed 2017 and 2018 allocations of sablefish TACs.

[5] ''Shallow-water flatfish'' means flatfish not including ''deep-water flatfish,'' flathead sole, rex sole, or arrowtooth flounder.

[6] ''Deep-water flatfish'' means Dover sole, Greenland turbot, Kamchatka flounder, and deep-sea sole.

[7] ''Pacific ocean perch'' means *Sebastes alutus.*

[8] ''Northern rockfish'' means *Sebastes polyspinous.* For management purposes the 3 mt apportionment of ABC to the WYK District of the Eastern Gulf of Alaska has been included in the other rockfish (slope rockfish) species group.

[9] ''Shortraker rockfish'' means *Sebastes borealis.*

[10] ''Dusky rockfish'' means *Sebastes variabilis.*

[11] ''Rougheye rockfish'' means *Sebastes aleutianus* (rougheye) and *Sebastes melanostictus* (blackspotted).

[12] ''Demersal shelf rockfish'' means *Sebastes pinniger* (canary), *S. nebulosus* (china), *S. caurinus* (copper), *S. maliger* (quillback), *S. helvomaculatus* (rosethorn), *S. nigrocinctus* (tiger), and *S. ruberrimus* (yelloweye).

[13] ''Thornyhead rockfish'' means *Sebastes* species.

[14] ''Other rockfish (slope rockfish)'' means *Sebastes aurora* (aurora), *S. melanostomus* (blackgill), *S. paucispinis* (bocaccio), *S. goodei* (chilipepper), *S. crameri* (darkblotch), *S. elongatus* (greenstriped), *S. variegatus* (harlequin), *S. wilsoni* (pygmy), *S. babcocki* (redbanded), *S. proriger* (redstripe), *S. zacentrus* (sharpchin), *S. jordani* (shortbelly), *S. brevispinis* (silvergray), *S. diploproa* (splitnose), *S. saxicola* (stripetail), *S. miniatus* (vermilion), *S. reedi* (yellowmouth), *S. entomelas* (widow), and *S. flavidus* (yellowtail). In the Eastern GOA only, ''other rockfish'' also includes northern rockfish (*S. polyspinous*).

[15] ''Other rockfish'' in the Western and Central Regulatory Areas and in the West Yakutat District means all rockfish species included in the ''other rockfish'' and demersal shelf rockfish categories.

[16] ''Big skates'' means *Raja binoculata.*

[17] ''Longnose skates'' means *Raja rhina.*

[18] ''Other skates'' means *Bathyraja and Raja spp.*

Proposed Apportionment of Reserves

Section 679.20(b)(2) requires NMFS to set aside 20 percent of each TAC for pollock, Pacific cod, flatfish, sculpins, sharks, squids, and octopuses in reserves for possible apportionment at a later date during the fishing year. In 2016, NMFS reapportioned all of the reserves in the final harvest specifications. For 2017 and 2018, NMFS proposes reapportionment of each of the reserves for pollock, Pacific cod, flatfish, sculpins, sharks, squids, and octopuses back into the original TAC from which the reserve was derived. NMFS anticipates, based on recent harvest patterns, that such reserves are not necessary and the entire TAC for each of these species will be caught. The TACs in Table 1 reflect this proposed reapportionment of reserve amounts for these species and species groups, *i.e.,* each proposed TAC for the above mentioned species categories contains the full TAC recommended by the Council.

Proposed Apportionments of Pollock TAC Among Seasons and Regulatory Areas, and Allocations for Processing by Inshore and Offshore Components

In the GOA, pollock is apportioned by season and area, and is further allocated for processing by inshore and offshore components. Pursuant to § 679.20(a)(5)(iv)(B), the annual pollock TAC specified for the Western and Central Regulatory Areas of the GOA is apportioned into four equal seasonal allowances of 25 percent. As established by § 679.23(d)(2)(i) through (iv), the A, B, C, and D season allowances are available from January 20 through March 10, March 10 through May 31, August 25 through October 1, and October 1 through November 1, respectively.

Pollock TACs in the Western and Central Regulatory Areas of the GOA are apportioned among Statistical Areas 610, 620, and 630, pursuant to § 679.20(a)(5)(iv)(A). In the A and B seasons, the apportionments have historically been based on the proportional distribution of pollock biomass based on the four most recent NMFS winter surveys. In the C and D seasons, the apportionments are in proportion to the distribution of pollock biomass based on the four most recent NMFS summer surveys. For 2017 and 2018, the Council recommends, and NMFS proposes, following the methodology used for the 2016 and 2017 harvest specifications. This methodology averages the winter and summer distribution of pollock in the Central Regulatory Area for the A season instead of using the distribution based on only the winter surveys. The average is intended to reflect the best available information about migration patterns, distribution of pollock, and the performance of the fishery in the area during the A season. For the A season, the apportionment is based on the proposed adjusted estimate of the relative distribution of pollock biomass of approximately 6 percent, 73 percent, and 21 percent in Statistical Areas 610, 620, and 630, respectively. For the B season, the apportionment is based on the relative distribution of pollock biomass of approximately 6 percent, 85 percent, and 9 percent in Statistical Areas 610, 620, and 630, respectively. For the C and D seasons, the apportionment is based on the relative distribution of pollock biomass of approximately 41 percent, 26 percent, and 33 percent in Statistical Areas 610, 620, and 630, respectively.

Within any fishing year, the amount by which a seasonal allowance is underharvested or overharvested may be added to, or subtracted from, subsequent seasonal allowances in a manner to be determined by the Regional Administrator (§ 679.20(a)(5)(iv)(B)). The rollover amount is limited to 20 percent of the unharvested seasonal apportionment for the statistical area. Any unharvested pollock above the 20-percent limit could be further distributed to the other statistical areas, in proportion to the estimated biomass in the subsequent season in those statistical areas (§ 679.20(a)(5)(iv)(B)). The proposed 2017 and 2018 pollock TACs in the WYK District of 9,209 mt and SEO District of 9,920 mt are not allocated by season.

Section 679.20(a)(6)(i) requires the allocation of 100 percent of the pollock apportionments in all regulatory areas and all seasonal allowances to vessels catching pollock for processing by the inshore component after subtraction of pollock amounts projected by the Regional Administrator to be caught by, or delivered to, the offshore component incidental to directed fishing for other groundfish species. Thus, the amount of pollock available for harvest by vessels harvesting pollock for processing by the offshore component is that amount that will be taken as incidental catch during directed fishing for groundfish species other than pollock, up to the maximum retainable amounts allowed under § 679.20(e) and (f). At this time, these incidental catch amounts of pollock are unknown and will be determined as fishing activity occurs during the fishing year by the offshore component.

Table 2 lists the proposed 2017 and 2018 seasonal biomass distribution of pollock in the Western and Central Regulatory Areas, area apportionments, and seasonal allowances. The amounts of pollock for processing by the inshore and offshore components are not shown.

TABLE 2—PROPOSED 2017 AND 2018 DISTRIBUTION OF POLLOCK IN THE CENTRAL AND WESTERN REGULATORY AREAS OF THE GULF OF ALASKA; SEASONAL BIOMASS DISTRIBUTION, AREA APPORTIONMENTS; AND SEASONAL ALLOWANCES OF ANNUAL TAC [1]

[Values are rounded to the nearest metric ton]

Season [2]	Shumagin (Area 610)		Chirikof (Area 620)		Kodiak (Area 630)		Total [3]
A (Jan 20–Mar 10)	3,769	(6.41%)	42,732	(72.71%)	12,272	(20.88%)	58,768
B (Mar 10–May 31)	3,769	(6.41%)	49,996	(85.07%)	5,007	(8.52%)	58,768
C (Aug 25–Oct 1)	24,060	(40.94%)	15,176	(25.82%)	19,529	(33.23%)	58,768
D (Oct 1–Nov 1)	24,060	(40.94%)	15,175	(25.82%)	19,529	(33.23%)	58,768
Annual Total	55,657		123,078		56,336		235,071

[1] Area apportionments and seasonal allowances may not total precisely due to rounding.

[2] As established by § 679.23(d)(2)(i) through (iv), the A, B, C, and D season allowances are available from January 20 through March 10, March 10 through May 31, August 25 through October 1, and October 1 through November 1, respectively. The amounts of pollock for processing by the inshore and offshore components are not shown in this table.

[3] The West Yakutat and Southeast Outside District pollock TACs are not allocated by season and are not included in the total pollock TACs shown in this table.

Proposed Annual and Seasonal Apportionments of Pacific Cod TAC

Pursuant to § 679.20(a)(12)(i), NMFS proposes allocations for the 2017 and 2018 Pacific cod TACs in the Western and Central Regulatory Areas of the GOA among gear and operational sectors. NMFS also proposes allocating the 2017 and 2018 Pacific cod TACs annually between the inshore and offshore components in the Eastern GOA (§ 679.20(a)(6)(ii)). In the Central GOA, the Pacific cod TAC is apportioned seasonally first to vessels using jig gear, and then among catcher vessels (CVs) less than 50 feet in length overall using hook-and-line gear, CVs equal to or greater than 50 feet in length overall using hook-and-line gear, catcher/processors (C/Ps) using hook-and-line gear, CVs using trawl gear, C/Ps using trawl gear, and vessels using pot gear (§ 679.20(a)(12)(i)(B)). In the Western GOA, the Pacific cod TAC is apportioned seasonally first to vessels using jig gear, and then among CVs using hook-and-line gear, C/Ps using hook-and-line gear, CVs using trawl gear, C/Ps using trawl gear, and vessels using pot gear (§ 679.20(a)(12)(i)(A)). The overall seasonal apportionments in the Western and Central GOA are 60 percent of the annual TAC to the A season and 40 percent of the annual TAC to the B season.

Under § 679.20(a)(12)(ii), any overage or underage of the Pacific cod allowance from the A season will be subtracted from, or added to, the subsequent B season allowance. In addition, any portion of the hook-and-line, trawl, pot, or jig sector allocations that is determined by NMFS as likely to go unharvested by a sector may be reapportioned to other sectors for harvest during the remainder of the fishing year.

Pursuant to § 679.20(a)(12)(i)(A) and (B), a portion of the annual Pacific cod TACs in the Western and Central GOA will be allocated to vessels with a Federal fisheries permit that use jig gear before TAC is apportioned among other non-jig sectors. In accordance with the FMP, the annual jig sector allocations may increase to up to 6 percent of the annual Western and Central GOA Pacific cod TACs, depending on the annual performance of the jig sector (see Table 1 of Amendment 83 to the FMP for a detailed discussion of the jig sector allocation process (76 FR 74670, December 1, 2011)). Jig sector allocation increases are established for a minimum of 2 years.

NMFS has evaluated the historical harvest performance of the jig sector in the Western and Central GOA, and is establishing the proposed 2017 and 2018 Pacific cod apportionments to this sector based on the jig performance through 2015. NMFS proposes that the jig sector receive 3.5 percent of the annual Pacific cod TAC in the Western GOA. This includes a base allocation of 1.5 percent and an additional 2.0 percent because this sector harvested greater than 90 percent of its initial 2012 and 2014 allocations in the Western GOA. NMFS also proposes that the jig sector would receive 1.0 percent of the annual Pacific cod TAC in the Central GOA. This includes a base allocation of 1.0 percent and no additional performance increase. These historical Pacific cod jig allocations, catch, and percent allocation changes are listed in Example 1.

EXAMPLE 1—SUMMARY OF WESTERN GOA AND CENTRAL GOA MANAGEMENT AREA PACIFIC COD CATCH BY JIG GEAR IN 2012 THROUGH 2015, AND CORRESPONDING PERCENT ALLOCATION CHANGES

Area	Year	Initial percent of TAC	Initial TAC allocation	Catch (mt)	Percent of initial allocation	>90% of initial allocation?	Change to percent allocation
WGOA	2012	1.5	315	322	102	Y	Increase 1%
	2013	2.5	530	273	52	N	None
	2014	2.5	573	785	137	Y	Increase 1%
	2015	3.5	948	55	6	N	None
CGOA	2012	1.0	427	400	94	Y	Increase 1%
	2013	2.0	740	202	27	N	None
	2014	2.0	797	262	33	N	None
	2015	1.0	460	355	77	N	Decrease 1%

NMFS will re-evaluate the annual 2015 and 2016 harvest performance of each jig sector when the 2016 fishing year is complete to determine whether to change the jig sector allocations proposed by this action in conjunction with the final 2017 and 2018 harvest specifications. The current catch through November 2016 by the Western GOA jig sector indicates that the Pacific cod allocation percentage to this sector would probably decrease by 1 percent in 2017. Also, the current catch by the Central GOA jig sector indicates that this sector's Pacific cod allocation percentage would not change in 2017. The jig sector allocations are further apportioned between the A (60 percent) and B (40 percent) seasons (§ 679.20(a)(12)(i) and § 679.23(d)(3)(iii)).

Table 3 lists the seasonal apportionments and allocations of the proposed 2017 and 2018 Pacific cod TACs.

TABLE 3—PROPOSED 2017 AND 2018 SEASONAL APPORTIONMENTS AND ALLOCATIONS OF PACIFIC COD TOTAL ALLOWABLE CATCH AMOUNTS IN THE GOA; ALLOCATIONS IN THE WESTERN GOA AND CENTRAL GOA SECTORS, AND THE EASTERN GOA FOR PROCESSING BY THE INSHORE AND OFFSHORE COMPONENTS

[Values are rounded to the nearest metric ton]

Regulatory area and sector	Annual allocation (mt)	A season		B season	
		Sector percentage of annual non-jig TAC	Seasonal allowances (mt)	Sector percentage of annual non-jig TAC	Seasonal allowances (mt)
Western GOA:					
Jig (3.5% of TAC)	857	N/A	514	N/A	343
Hook-and-line CV	331	0.70	165	0.70	165
Hook-and-line C/P	4,681	10.90	2,577	8.90	2,104
Trawl CV	9,078	27.70	6,549	10.70	2,530
Trawl C/P	567	0.90	213	1.50	355
Pot CV and Pot C/P	8,984	19.80	4,681	18.20	4,303
Total	24,499	60.00	14,699	40.00	9,799
Central GOA:					
Jig (1.0% of TAC)	320	N/A	192	N/A	128
Hook-and-line <50 CV	4,620	9.32	2,947	5.29	1,673
Hook-and-line ≥50 CV	2,122	5.61	1,775	1.10	347
Hook-and-line C/P	1,615	4.11	1,299	1.00	316
Trawl CV [1]	13,156	21.13	6,687	20.45	6,470
Trawl C/P	1,328	2.00	634	2.19	694
Pot CV and Pot C/P	8,797	17.83	5,641	9.97	3,156
Total	31,958	60.00	19,175	40.00	12,783
Eastern GOA:		Inshore (90% of Annual TAC)		Offshore (10% of Annual TAC)	
	5,693	5,124		569	

[1] Trawl vessels participating in Rockfish Program cooperatives receive 3.81 percent, or 1,409 mt, of the annual Central GOA TAC (see Table 28c to 50 CFR part 679), which is deducted from the Trawl CV B season allowance (see Table 8).

Proposed Allocations of the Sablefish TACs Amounts to Vessels Using Hook-and-Line and Trawl Gear

Sections 679.20(a)(4)(i) and (ii) require allocations of sablefish TACs for each of the regulatory areas and districts to hook-and-line and trawl gear. In the Western and Central Regulatory Areas, 80 percent of each TAC is allocated to hook-and-line gear, and 20 percent of each TAC is allocated to trawl gear. In the Eastern Regulatory Area, 95 percent of the TAC is allocated to hook-and-line gear and 5 percent is allocated to trawl gear. The trawl gear allocation in the Eastern GOA may only be used to support incidental catch of sablefish in directed fisheries for other target species (§ 679.20(a)(4)(i)).

In recognition of the prohibition against trawl gear in the SEO District of the Eastern Regulatory Area, the Council recommended and NMFS proposes the allocation of 5 percent of the combined Eastern Regulatory Area sablefish TAC to trawl gear in the WYK District, making the remainder of the WYK sablefish TAC available to vessels using hook-and-line gear. NMFS proposes to allocate 100 percent of the sablefish TAC in the SEO District to vessels using hook-and-line gear. This action results in a proposed 2017 allocation of 173 mt to trawl gear and 1,175 mt to hook-and-line gear in the WYK District, a 2,118 mt to hook-and-line gear in the SEO District, and a 2018 allocation of 173 mt to trawl gear in the WYK District. Table 4 lists the allocations of the proposed 2017 sablefish TACs to hook-and-line and trawl gear. Table 5 lists the allocations of the proposed 2018 sablefish TACs to trawl gear.

The Council recommended that the hook-and-line sablefish TAC be established annually to ensure that the sablefish IFQ fishery is conducted concurrently with the halibut IFQ fishery and is based on recent survey information. The Council also recommended that only the trawl sablefish TAC be established for 2 years so that retention of incidental catch of sablefish by trawl gear could commence in January in the second year of the groundfish harvest specifications. Since there is an annual assessment for sablefish and the final harvest specifications are expected to be published before the IFQ season begins (typically, in early March), the Council recommended that the sablefish TAC be set annually, rather than for 2 years, so that the best available scientific information could be considered in establishing the ABCs and TACs. With the exception of the trawl allocations that are provided to the Rockfish Program cooperatives (see Table 28c to part 679), directed fishing for sablefish with trawl gear is closed during the fishing year. Also, fishing for groundfish with trawl gear is prohibited prior to January 20. Therefore, it is not likely that the sablefish allocation to trawl gear would be reached before the effective date of the final 2017 and 2018 harvest specifications.

TABLE 4—PROPOSED 2017 SABLEFISH TOTAL ALLOWABLE CATCH (TAC) IN THE GULF OF ALASKA AND ALLOCATIONS TO HOOK-AND-LINE AND TRAWL GEAR

[Values are rounded to the nearest metric ton]

Area/district	TAC	Hook-and-line allocation	Trawl allocation
Western	1,163	930	233
Central [1]	3,678	2,942	736
West Yakutat [2]	1,348	1,175	173
Southeast Outside	2,118	2,118	0
Total	8,307	7,166	1,142

[1] The trawl allocation to the Central Regulatory Area is further reduced by the sablefish apportioned to the Rockfish Program cooperatives (378 mt). See Table 8. This results in 358 mt being available for the non-Rockfish Program trawl fisheries.

[2] The proposed trawl allocation is based on allocating 5 percent of the combined Eastern Regulatory Area (West Yakutat and Southeast Outside Districts combined) sablefish TAC to trawl gear in the West Yakutat District.

TABLE 5—PROPOSED 2018 SABLEFISH TOTAL ALLOWABLE CATCH (TAC) IN THE GULF OF ALASKA AND ALLOCATION TO TRAWL GEAR [1]

[Values are rounded to the nearest metric ton]

Area/district	TAC	Hook-and-line allocation	Trawl allocation
Western	1,163	n/a	233
Central [2]	3,678	n/a	736
West Yakutat [3]	1,348	n/a	173
Southeast Outside	2,118	n/a	0
Total	8,307	n/a	1,142

[1] The trawl allocation to the Central Regulatory Area is further reduced by the sablefish apportioned to the Rockfish Program cooperatives (378 mt). See Table 8. This results in 358 mt being available for the non-Rockfish Program trawl fisheries.

[2] The Council recommended that harvest specifications for the hook-and-line gear sablefish Individual Fishing Quota fisheries be limited to 1 year.

[3] The proposed trawl allocation is based on allocating 5 percent of the combined Eastern Regulatory Area (West Yakutat and Southeast Outside Districts combined) sablefish TAC to trawl gear in the West Yakutat District.

Proposed Apportionments to the Rockfish Program

These proposed 2017 and 2018 harvest specifications for the GOA include the fishery cooperative allocations and sideboard limitations established by the Rockfish Program. Program participants are primarily trawl CVs and trawl C/Ps, with limited participation by vessels using longline gear. The Rockfish Program assigns quota share and cooperative quota to participants for primary (Pacific ocean perch, northern rockfish, and dusky rockfish) and secondary species (Pacific cod, rougheye rockfish, sablefish, shortraker rockfish, and thornyhead rockfish), allows a participant holding a license limitation program (LLP) license with rockfish quota share to form a rockfish cooperative with other persons, and allows holders of C/P LLP licenses to opt out of the fishery. The Rockfish Program also has an entry level fishery for rockfish primary species for vessels using longline gear.

Under the Rockfish Program, rockfish primary species in the Central GOA are allocated to participants after deducting for incidental catch needs in other directed groundfish fisheries. Participants in the Rockfish Program also receive a portion of the Central GOA TAC of specific secondary species. Besides groundfish species, the Rockfish Program allocates a portion of the halibut PSC limit (191 mt) from the third season deep-water species fishery allowance for the GOA trawl fisheries to Rockfish Program participants (§ 679.81(d)). Rockfish Program sideboards and halibut PSC limits are discussed below.

Additionally, the Rockfish Program establishes sideboard limits to restrict the ability of harvesters that operate under the Rockfish Program to increase their participation in other, non-Rockfish Program fisheries. These restrictions are discussed in a subsequent section titled ''Rockfish Program Groundfish Sideboard and Halibut PSC Limitations.''

Section 679.81(a)(2)(ii) requires allocations of 5 mt of Pacific ocean perch, 5 mt of northern rockfish, and 30 mt of dusky rockfish to the entry level longline fishery in 2017 and 2018. The allocation for the entry level longline fishery would increase incrementally each year if the catch exceeds 90 percent of the allocation of a species. The incremental increase in the allocation would continue each year until it is the maximum percentage of the TAC for that species. In 2016, the catch did not exceed 90 percent of any allocated rockfish species. Therefore, NMFS is not proposing an increase to the entry level longline fishery 2017 and 2018 allocations in the Central GOA. The remainder of the TACs for the rockfish primary species would be allocated to the CV and C/P cooperatives. Table 6 lists the allocations of the proposed 2017 and 2018 TACs for each rockfish primary species to the entry level longline fishery, the incremental increase for future years, and the maximum percentage of the TAC for the entry level longline fishery.

TABLE 6—PROPOSED 2017 AND 2018 ALLOCATIONS OF ROCKFISH PRIMARY SPECIES TO THE ENTRY LEVEL LONGLINE FISHERY IN THE CENTRAL GULF OF ALASKA

Rockfish primary species	2017 and 2018 allocations	Incremental increase in 2018 if ≥90 percent of 2017 allocation is harvested	Up to maximum percent of each TAC of:
Pacific ocean perch	5 metric tons	5 metric tons	1
Northern rockfish	5 metric tons	5 metric tons	2
Dusky rockfish	30 metric tons	20 metric tons	5

Section 679.81(a)(2) requires allocations of rockfish primary species among various components of the Rockfish Program. Table 7 lists the proposed 2017 and 2018 allocations of rockfish in the Central GOA to the entry level longline fishery, and Rockfish CV and C/P Cooperatives in the Rockfish Program. NMFS also proposes setting aside incidental catch amounts (ICAs) for other directed fisheries in the Central GOA of 1,500 mt of Pacific ocean perch, 300 mt of northern rockfish, and 250 mt of dusky rockfish. These amounts are based on recent average incidental catches in the Central GOA by other groundfish fisheries.

Allocations among vessels belonging to CV or C/P cooperatives are not included in these proposed harvest specifications. Rockfish Program applications for CV cooperatives and C/P cooperatives are not due to NMFS until March 1 of each calendar year; therefore, NMFS cannot calculate 2017 and 2018 allocations in conjunction with these proposed harvest specifications. NMFS will post these allocations on the Alaska Region Web site at *http://alaskafisheries.noaa.gov/sustainablefisheries/rockfish/* when they become available after March 1.

TABLE 7—PROPOSED 2017 AND 2018 ALLOCATIONS OF ROCKFISH PRIMARY SPECIES IN THE CENTRAL GULF OF ALASKA TO THE ENTRY LEVEL LONGLINE FISHERY AND ROCKFISH COOPERATIVES IN THE ROCKFISH PROGRAM

[Values are rounded to the nearest metric ton]

Rockfish primary species	TAC	Incidental catch allowance (ICA)	TAC minus ICA	Allocation to the entry level longline [1] fishery	Allocation to the Rockfish Cooperatives [2]
Pacific ocean perch	16,860	1,500	15,360	5	15,535
Northern rockfish	3,338	300	3,038	5	3,033
Dusky rockfish	3,791	250	3,541	30	3,511
Total	23,989	2,050	21,939	40	21,899

[1] Longline gear includes hook-and-line, jig, troll, and handline gear.
[2] Rockfish cooperatives include vessels in CV and C/P cooperatives.

Section 679.81(c) requires allocations of rockfish secondary species to CV and C/P cooperatives in the GOA. CV cooperatives receive allocations of Pacific cod, sablefish from the trawl gear allocation, and thornyhead rockfish. C/P cooperatives receive allocations of sablefish from the trawl allocation, rougheye rockfish, shortraker rockfish, and thornyhead rockfish. Table 8 lists the apportionments of the proposed 2017 and 2018 TACs of rockfish secondary species in the Central GOA to CV and C/P cooperatives.

TABLE 8—PROPOSED 2017 AND 2018 APPORTIONMENTS OF ROCKFISH SECONDARY SPECIES IN THE CENTRAL GOA TO CATCHER VESSEL AND CATCHER/PROCESSOR COOPERATIVES

[Values are in metric tons]

Rockfish secondary species	Central GOA annual TAC	Catcher vessel cooperatives		Catcher/processor cooperatives	
		Percentage of TAC	Apportionment (mt)	Percentage of TAC	Apportionment (mt)
Pacific cod	31,958	3.81	1,218	0.0	0.0
Sablefish	3,678	6.78	249	3.51	129
Shortraker rockfish	301	0.0	0	40.00	120
Rougheye rockfish	705	0.0	0	58.87	415
Thornyhead rockfish	988	7.84	77	26.50	262

Halibut PSC Limits

Section 679.21(d) establishes annual halibut PSC limit apportionments to trawl and hook-and-line gear, and authorizes the establishment of apportionments for pot gear. In October 2016, the Council recommended halibut PSC limits of 1,706 mt for trawl gear, 257 mt for hook-and-line gear, and 9 mt for the demersal shelf rockfish (DSR) fishery in the SEO District.

The DSR fishery in the SEO District is defined at § 679.21(d)(2)(ii)(A). This fishery is apportioned 9 mt of the halibut PSC limit in recognition of its small-scale harvests of groundfish. NMFS estimates low halibut bycatch in the DSR fishery because (1) the duration of the DSR fisheries and the gear soak times are short, (2) the DSR fishery

occurs in the winter when less overlap occurs in the distribution of DSR and halibut, and (3) the directed commercial DSR fishery has a low DSR TAC. The Alaska Department of Fish and Game sets the commercial GHL for the DSR fishery after deducting (1) estimates of DSR incidental catch in all fisheries (including halibut and subsistence) and (2) the allocation to the DSR sport fish fishery. Of the 231 mt TAC for DSR in 2016, 188 mt were available for the DSR commercial directed fishery, of which 8 mt were harvested.

The FMP authorizes the Council to exempt specific gear from the halibut PSC limits. NMFS, after consultation with the Council, proposes to exempt pot gear, jig gear, and the sablefish IFQ hook-and-line gear fishery categories from the non-trawl halibut PSC limit for 2017 and 2018. The Council recommended, and NMFS is proposing, these exemptions because (1) pot gear fisheries have low annual halibut bycatch mortality, (2) IFQ program regulations prohibit discard of halibut if any halibut IFQ permit holder on board a CV holds unused halibut IFQ (§ 679.7(f)(11)), (3) some sablefish IFQ permit holders hold halibut IFQ permits and are therefore required to retain the halibut they catch while fishing sablefish IFQ, and (4) NMFS estimates negligible halibut mortality for the jig gear fisheries. NMFS estimates halibut mortality is negligible in the jig gear fisheries given the small amount of groundfish harvested by jig gear, the selective nature of jig gear, and the high survival rates of halibut caught and released with jig gear.

The best available information on estimated halibut bycatch consists of data collected by fisheries observers during 2016. The calculated halibut bycatch mortality through November 8, 2016, is 1,321 mt for trawl gear and 206 mt for hook-and-line gear for a total halibut mortality of 1,527 mt. This halibut mortality was calculated using groundfish and halibut catch data from the NMFS Alaska Region's catch accounting system. This accounting system contains historical and recent catch information compiled from each Alaska groundfish fishery.

Section 679.21(d)(4)(i) and (ii) authorizes NMFS to seasonally apportion the halibut PSC limits after consultation with the Council. The FMP and regulations require that the Council and NMFS consider the following information in seasonally apportioning halibut PSC limits: (1) Seasonal distribution of halibut, (2) seasonal distribution of target groundfish species relative to halibut distribution, (3) expected halibut bycatch needs on a seasonal basis relative to changes in halibut biomass and expected catch of target groundfish species, (4) expected bycatch rates on a seasonal basis, (5) expected changes in directed groundfish fishing seasons, (6) expected actual start of fishing effort, and (7) economic effects of establishing seasonal halibut allocations on segments of the target groundfish industry. Based on public comment and the information presented in the final 2016 SAFE report, the Council may recommend or NMFS may make changes to the seasonal, gear-type, or fishery category apportionments of halibut PSC limits for the final 2017 and 2018 harvest specifications.

The final 2016 and 2017 harvest specifications (81 FR 14740, March 18, 2016) summarized the Council's and NMFS' findings with respect to halibut PSC for each of these FMP considerations. The Council's and NMFS' findings for 2017 are unchanged from 2016. Table 9 lists the proposed 2017 and 2018 Pacific halibut PSC limits, allowances, and apportionments. The halibut PSC limits in these tables reflect the halibut PSC limits set forth at § 679.21(d)(2) and § 679.21(d)(3). Sections 679.21(d)(4)(iii) and (iv) specify that any underages or overages of a seasonal apportionment of a PSC limit will be deducted from or added to the next respective seasonal apportionment within the fishing year.

TABLE 9—PROPOSED 2017 AND 2018 PACIFIC HALIBUT PSC LIMITS, ALLOWANCES, AND APPORTIONMENTS

[Values are in metric tons]

Trawl gear			Hook-and-line gear [1]				
			Other than DSR			DSR	
Season	Percent	Amount	Season	Percent	Amount	Season	Amount
January 20–April 1	27.5	469	January 1–June 10	86	221	January 1–December 31	9
April 1–July 1	20	341	June 10–September 1	2	5		
July 1–September 1	30	512	September 1–December 31	12	31		
September 1–October 1	7.5	128					
October 1–December 31	15	256					
Total		1,706			257		9

[1] The Pacific halibut prohibited species catch (PSC) limit for hook-and-line gear is allocated to the demersal shelf rockfish (DSR) fishery and fisheries other than DSR. The hook-and-line sablefish fishery is exempt from halibut PSC limits, as are pot and jig gear for all groundfish fisheries.

Section 679.21(d)(3)(ii) authorizes further apportionment of the trawl halibut PSC limit as bycatch allowances to trawl fishery categories. The annual apportionments are based on each category's proportional share of the anticipated halibut bycatch mortality during a fishing year and optimization of the total amount of groundfish harvest under the halibut PSC limit. The fishery categories for the trawl halibut PSC limits are (1) a deep-water species fishery, composed of sablefish, rockfish, deep-water flatfish, rex sole, and arrowtooth flounder; and (2) a shallow-water species fishery, composed of pollock, Pacific cod, shallow-water flatfish, flathead sole, Atka mackerel, skates and ''other species'' (sculpins, sharks, squids, and octopuses) (§ 679.21(d)(3)(iii)). Table 10 lists the proposed 2017 and 2018 seasonal apportionments of trawl halibut PSC limits between the trawl gear deep-water and the shallow-water species fisheries.

Table 28d to 50 CFR part 679 specifies the amount of the trawl halibut PSC limit that is assigned to the CV and C/P sectors that are participating in the Central GOA Rockfish Program. This includes 117 mt of halibut PSC limit to the CV sector and 74 mt of halibut PSC limit to the C/P sector. These amounts are allocated from the trawl deep-water species fishery's halibut PSC third seasonal apportionment.

Section 679.21(d)(4)(iii)(B) limits the amount of the halibut PSC limit

allocated to Rockfish Program participants that could be re-apportioned to the general GOA trawl fisheries to no more than 55 percent of the unused annual halibut PSC apportioned to Rockfish Program participants. The remainder of the unused Rockfish Program halibut PSC limit is unavailable for use by vessels directed fishing with trawl gear for the remainder of the fishing year (§ 679.21(d)(4)(iii)(C)).

TABLE 10—PROPOSED 2017 AND 2018 SEASONAL APPORTIONMENTS OF THE PACIFIC HALIBUT PSC LIMIT APPORTIONED BETWEEN THE TRAWL GEAR SHALLOW-WATER AND DEEP-WATER SPECIES FISHERIES

[Values are in metric tons]

Season	Shallow-water	Deep-water [1]	Total
January 20–April 1	384	85	469
April 1–July 1	85	256	341
July 1–September 1	171	341	512
September 1–October 1	128	([3])	128
Subtotal, January 20–October 1	768	682	1,450
October 1–December 31 [2]			256
Total			1,706

[1] Vessels participating in cooperatives in the Rockfish Program will receive 191 mt of the third season (July 1 through September 1) deep-water species fishery halibut PSC apportionment.
[2] There is no apportionment between trawl shallow-water and deep-water species fisheries during the fifth season (October 1 through December 31).
[3] Any remainder.

Section 679.21(d)(2) requires that the ''other hook-and-line fishery'' halibut PSC apportionment to vessels using hook-and-line gear must be divided between CVs and C/Ps. NMFS must calculate the halibut PSC limit apportionments for the entire GOA to hook-and-line CVs and C/Ps in accordance with § 679.21(d)(2)(iii) in conjunction with these harvest specifications. A comprehensive description and example of the calculations necessary to apportion the ''other hook-and-line fishery'' halibut PSC limit between the hook-and-line CV and C/P sectors were included in the proposed rule to implement Amendment 83 to the FMP (76 FR 44700, July 26, 2011) and is not repeated here.

For 2017 and 2018, NMFS proposes annual halibut PSC limit apportionments of 129 mt and 128 mt to the hook-and-line CV and hook-and-line C/P sectors, respectively. The 2017 and 2018 annual halibut PSC limits are divided into three seasonal apportionments, using seasonal percentages of 86 percent, 2 percent, and 12 percent. Table 11 lists the proposed 2017 and 2018 annual halibut PSC limits and seasonal apportionments between the hook-and-line CV and hook-and-line C/P sectors in the GOA.

No later than November 1 of each year, NMFS calculates the projected unused amount of halibut PSC limit by either of the hook-and-line sectors for the remainder of the year. The projected unused amount of halibut PSC limit is made available to the other hook-and-line sector for the remainder of that fishing year if NMFS determines that an additional amount of halibut PSC limit is necessary for that sector to continue its directed fishing operations (§ 679.21(d)(2)(iii)(C)).

TABLE 11—PROPOSED 2017 AND 2018 APPORTIONMENTS OF THE ''OTHER HOOK-AND-LINE FISHERIES'' HALIBUT PSC ALLOWANCE BETWEEN THE HOOK-AND-LINE GEAR CATCHER VESSEL AND CATCHER/PROCESSOR SECTORS

[Values are in metric tons]

''Other than DSR'' allowance	Hook-and-line sector	Sector annual amount	Season	Seasonal percentage	Sector seasonal amount
257	Catcher Vessel	129	January 1–June 10	86	111
			June 10–September 1	2	3
			September 1–December 31	12	15
	Catcher/Processor	128	January 1–June 10	86	110
			June 10–September 1	2	3
			September 1–December 31	12	15

Halibut Discard Mortality Rates

To monitor halibut bycatch mortality allowances and apportionments, the Regional Administrator uses observed halibut incidental catch rates, halibut discard mortality rates (DMRs), and estimates of groundfish catch to project when a fishery's halibut bycatch mortality allowance or seasonal apportionment is reached. Halibut incidental catch rates are based on observers' estimates of halibut incidental catch in the groundfish fishery. DMRs are estimates of the proportion of incidentally caught halibut that do not survive after being returned to the sea. The cumulative halibut mortality that accrues to a particular halibut PSC limit is the product of a DMR multiplied by the estimated halibut PSC. DMRs are estimated using the best information available in conjunction with the annual GOA stock assessment process. The DMR methodology and findings are included as an appendix to the annual GOA groundfish SAFE report.

Historically, DMRs consisted of long-term averages of annual DMRs within target fisheries that were defined by management area, gear, and target species. Since the late 1990s, halibut

DMRs were calculated by the International Pacific Halibut Commission (IPHC), which then provided the estimates to the NMFS for application in managing halibut bycatch limits. DMRs specified through the Council process and used for catch accounting by NMFS have consisted of long-term averages of annual estimates within target fisheries that are defined by region, gear, and target species. Long-term averages are taken from annual estimates for the most recent 10-year period with the number of years with data to support annual DMR estimates varying among fisheries. Fishery-specific DMRs, once calculated, have generally been put in place for 3-year increments.

NMFS proposes to revise methods for estimating DMRs consistent with those methods developed by the halibut DMR working group and recommended by the Council at its October 2016 meeting. NMFS proposes for the 2017 and 2018 GOA groundfish harvest specifications revised DMRs consistent with modified DMR estimation methodology. The proposed change will make the DMR process transparent, transferable, and allow for review by all agencies/entities involved. The Alaska Region will program the revised DMRs into its groundfish catch accounting system to monitor the 2017 and 2018 halibut bycatch allowances (see Tables 9, 10, and 11). The DMRs proposed for 2017 and 2018 GOA groundfish harvest specifications reflect an ongoing effort by the Council to improve the estimation of DMRs in the Alaska groundfish fisheries.

The halibut DMR working group, consisting of the IPHC, Council, and NMFS Alaska Region staff, recommended the following broad changes to the DMR estimation method: Implementation of sampling design consistent with sampling protocols used under the Observer Restructuring Program; categorization of data of halibut viability based on vessel operations (sorting and handling practices, gear type, and processing sector) rather than target fisheries; and revision of reference timeframes to obtain estimates that are more responsive to changes in how the groundfish fisheries are observed and managed. These recommendations, and others, are described below.

- Revise the DMR estimation methodology for consistency with the sampling protocols instituted in 2013 through the restructured Observer Program. The Observer Program randomizes sampling of fishing trips within operational groupings, sampling of hauls within fishing trips, and sampling of biological data within hauls. Basing halibut DMR estimation on a sampling design consistent with Observer Program sampling protocols should reduce the potential for sampling bias, improve data on operational causes of variation in post-capture halibut viability, and promote the ability for NMFS to make timely improvements to halibut DMR estimation in the future.

- Incorporate the use of vessel operations into DMR estimation methodology. This incorporates data about the viability (likelihood to survive) of discarded halibut into DMR calculations. Data based on different vessel operational categories, such as sorting practices, handling practices, gear type, and processing sectors (*i.e.* CVs, CPs, and CVs delivering to motherships), provide better information on halibut viability. NMFS expects that incorporating this information into the DMR estimation methodology will yield a more precise estimate of actual mortality.

- Remove the use of target fishery. Fishery targets do not necessarily characterize statistical and/or vessel operational differences in the sampling or handling of halibut PSC. Using fishery target aggregations may have reduced the quality of DMR estimates due to small sample sizes or by combining vessel operations with very important differences in sampling and handling characteristics.

- Change the reference time-frame for DMR calculations. Rather than using 10-year average rates, the revised methodology estimates DMRs based on and initial 3-year average rates. Using 2013 as the starting year is more responsive to, and better aligns DMR calculation methodology with, the 2013 restructured Observer Program's sampling protocols. Using 2013 as the base year, NMFS and the Council will evaluate the time frame each year. Evaluating the time frame each year will enable NMFS and the Council to update the methodology and the halibut DMRs based on the best available information. The working group's discussion paper also included a comparison of the total amount of halibut mortality that accrues using current DMRs versus the working group's recommended DMRs. Calculating the 2015 halibut mortality using specified DMRs yielded 1,620 mt of halibut mortality, whereas using the recommended DMRs yielded 1,688 mt of halibut morality (a four percent increase). Calculating the 2016 halibut mortality (through September 2016) yielded 1,243 mt of halibut mortality, versus 1,256 mt of halibut mortality when applying the recommended DMRs (a one percent increase).

These proposed estimation methods, and recommendations for 2017 and 2018 halibut DMRs, were presented to the Plan Team in September 2016. The Plan Team concurred with the revised methodology, as well as the working group's halibut DMR recommendations for 2017 and 2018. The Council agreed with these recommendations at the Council's October 2016 meeting. Additionally, in April 2016 the SSC reviewed the methodology and made a number of suggestions for improving and refining it. The working group has incorporated those suggestions into its DMR estimation methodology. The working group's discussion of the revised halibut DMR methodology, including the comparative assessment, is available from the Council (see **ADDRESSES**). Table 12 lists the proposed 2017 and 2018 DMRs.

TABLE 12—PROPOSED 2017 AND 2018 HALIBUT DISCARD MORTALITY RATES FOR VESSELS FISHING IN THE GULF OF ALASKA

[Values are percent of halibut assumed to be dead]

Gear	Sector	Program	Discard mortality rate (percent)
Hook-and-line	C/P	non-Rockfish Program	11
Hook-and-line	CV	non-Rockfish Program	12
Pot	CV and C/P	non-Rockfish Program	10
Pelagic trawl	CV	Rockfish Program	100
Non-pelagic trawl	CV	Rockfish Program	85
Pelagic trawl	CV	non-Rockfish Program	100

TABLE 12—PROPOSED 2017 AND 2018 HALIBUT DISCARD MORTALITY RATES FOR VESSELS FISHING IN THE GULF OF ALASKA—Continued

[Values are percent of halibut assumed to be dead]

Gear	Sector	Program	Discard mortality rate (percent)
Non-pelagic trawl	CV	non-Rockfish Program	63
Non-pelagic trawl	C/P and Mothership	non-Rockfish Program	85
Non-pelagic trawl	C/P	Rockfish Program	85
Pelagic trawl	C/P	Rockfish Program	100
Pelagic trawl	C/P	non-Rockfish Program	100

Chinook Salmon Prohibited Species Catch Limit

Amendment 93 to the FMP (77 FR 42629, July 20, 2012) established separate Chinook salmon PSC limits in the Western and Central GOA in the directed pollock trawl fishery. These limits require NMFS to close the pollock directed fishery in the Western and Central regulatory areas of the GOA if the applicable limit is reached (§ 679.21(h)(8)). The annual Chinook salmon PSC limits in the pollock directed fishery of 6,684 salmon in the Western GOA and 18,316 salmon in the Central GOA are set in § 679.21(h)(2)(i) and (ii). In addition, all salmon (regardless of species), taken in the pollock directed fisheries in the Western and Central GOA must be retained until an observer at the processing facility that takes delivery of the catch is provided an opportunity to count the number of salmon and to collect any scientific data or biological samples from the salmon (§ 679.21(h)(6)).

Amendment 97 to the FMP (79 FR 71350, December 2, 2014) established an initial annual PSC limit of 7,500 Chinook salmon for the non-pollock groundfish fisheries. This limit is apportioned among three sectors: 3,600 Chinook salmon to trawl C/Ps; 1,200 Chinook salmon to trawl CVs participating in the Rockfish Program; and 2,700 Chinook salmon to trawl CVs not participating in the Rockfish Program that are fishing for groundfish species other than pollock (§ 679.21(h)(4)). NMFS will monitor the Chinook salmon PSC in the non-pollock GOA groundfish fisheries and close an applicable sector if it reaches its Chinook salmon PSC limit.

The Chinook salmon PSC limit for two sectors, trawl C/Ps and trawl CVs not participating in the Rockfish Program, may be increased in subsequent years based on the performance of these two sectors and their ability to minimize their use of their respective Chinook salmon PSC limits. If either or both of these two sectors limits its use of Chinook salmon PSC to a certain threshold amount in 2016, that sector will receive an incremental increase to its 2017 Chinook salmon PSC limit (§ 679.21(h)(4)). NMFS will evaluate the annual Chinook salmon PSC by trawl C/Ps and non-Rockfish Program CVs when the 2016 fishing year is complete to determine whether to increase the Chinook salmon PSC limits for these two sectors. Based on preliminary 2016 Chinook salmon PSC data, the trawl C/P sector will receive an incremental increase of its Chinook salmon PSC limit, as will the non-Rockfish Program CV sector. This evaluation will be completed in conjunction with the final 2017 and 2018 harvest specifications.

As described earlier in this preamble, Amendment 103 to the FMP became effective in 2016. The regulations associated with Amendment 103 authorize NMFS to use inseason management actions to reapportion unused Chinook salmon PSC among the pollock and non-pollock sectors. As of November 15, 2016, NMFS has not exercised this authority, as none of the trawl sectors have needed such reapportionments.

American Fisheries Act (AFA) Catcher/Processor and Catcher Vessel Groundfish Sideboard Limits

Section 679.64 establishes groundfish harvesting and processing sideboard limits on AFA C/Ps and CVs in the GOA. These sideboard limits are necessary to protect the interests of fishermen and processors who do not directly benefit from the AFA from those fishermen and processors who receive exclusive harvesting and processing privileges under the AFA. Section 679.7(k)(1)(ii) prohibits listed AFA C/Ps from harvesting any species of fish in the GOA. Additionally, § 679.7(k)(1)(iv) prohibits listed AFA C/Ps from processing any pollock harvested in a directed pollock fishery in the GOA and any groundfish harvested in Statistical Area 630 of the GOA.

AFA CVs that are less than 125 ft (38.1 meters) length overall, have annual landings of pollock in the Bering Sea and Aleutian Islands of less than 5,100 mt, and have made at least 40 landings of GOA groundfish from 1995 through 1997 are exempt from GOA sideboard limits under § 679.64(b)(2)(ii). Sideboard limits for non-exempt AFA CVs operating in the GOA are based on their traditional harvest levels of TAC in groundfish fisheries covered by the FMP. Section 679.64(b)(3)(iv) establishes the groundfish sideboard limitations in the GOA based on the retained catch of non-exempt AFA CVs of each sideboard species from 1995 through 1997 divided by the TAC for that species over the same period.

Table 13 lists the proposed 2017 and 2018 groundfish sideboard limits for non-exempt AFA CVs. NMFS will deduct all targeted or incidental catch of sideboard species made by non-exempt AFA CVs from the sideboard limits listed in Table 13.

TABLE 13—PROPOSED 2017 AND 2018 GOA NON-EXEMPT AMERICAN FISHERIES ACT CATCHER VESSEL (CV) GROUNDFISH SIDEBOARD LIMITS

[Values are rounded to the nearest metric ton]

Species	Apportionments by season/gear	Area/component	Ratio of 1995–1997 non-exempt AFA CV catch to 1995–1997 TAC	Proposed 2017 and 2018 TACs [3]	Proposed 2017 and 2018 non-exempt AFA CV sideboard limit
Pollock	A Season—January 20–March 10.	Shumagin (610)	0.6047	3,769	2,279
		Chirikof (620)	0.1167	42,732	4,987
		Kodiak (630)	0.2028	12,272	2,489
	B Season—March 10–May 31.	Shumagin (610)	0.6047	3,769	2,279
		Chirikof (620)	0.1167	49,996	5,835
		Kodiak (630)	0.2028	5,007	1,015
	C Season—August 25–October 1.	Shumagin (610)	0.6047	24,060	14,549
		Chirikof (620)	0.1167	15,176	1,771
		Kodiak (630)	0.2028	19,529	3,960
	D Season—October 1–November 1.	Shumagin (610)	0.6047	24,060	14,549
		Chirikof (620)	0.1167	15,175	1,771
		Kodiak (630)	0.2028	19,529	3,960
	Annual	WYK (640)	0.3495	9,209	3,219
		SEO (650)	0.3495	9,920	3,467
Pacific cod	A Season [1]—January 1–June 10.	W	0.1331	14,699	1,956
		C	0.0692	19,175	1,327
	B Season [2]—September 1–December 31.	W	0.1331	9,799	1,304
		C	0.0692	12,783	885
	Annual	E inshore	0.0079	5,124	40
		E offshore	0.0078	569	4
Sablefish	Annual, trawl gear	W	0.0000	233	0
		C	0.0642	736	47
		E	0.0433	173	8
Flatfish, shallow-water	Annual	W	0.0156	13,250	207
		C	0.0587	17,680	1,038
		E	0.0126	3,925	49
Flatfish, deep-water	Annual	W	0.0000	187	0
		C	0.0647	3,516	227
		E	0.0128	5,578	71
Rex sole	Annual	W	0.0007	1,318	1
		C	0.0384	4,453	171
		E	0.0029	1,736	5
Arrowtooth flounder	Annual	W	0.0021	14,500	30
		C	0.0280	75,000	2,100
		E	0.0002	13,800	3
Flathead sole	Annual	W	0.0036	8,650	31
		C	0.0213	15,400	328
		E	0.0009	3,800	3
Pacific ocean perch	Annual	W	0.0023	2,709	6
		C	0.0748	16,860	1,261
		E	0.0466	4,620	215
Northern rockfish	Annual	W	0.0003	430	0
		C	0.0277	3,338	92
Shortraker rockfish	Annual	W	0.0000	38	0
		C	0.0218	301	7
		E	0.0110	947	10
Dusky Rockfish	Annual	W	0.0001	159	0
		C	0.0000	3,791	0
		E	0.0067	334	2
Rougheye rockfish	Annual	W	0.0000	105	0
		C	0.0237	705	17
		E	0.0124	515	6
Demersal shelf rockfish	Annual	SEO	0.0020	231	0
Thornyhead rockfish	Annual	W	0.0280	291	8
		C	0.0280	988	28
		E	0.0280	682	19
Other Rockfish	Annual	W/C	0.1699	1,534	261
		E	0.0000	774	0
Atka mackerel	Annual	Gulfwide	0.0309	2,000	62
Big skates	Annual	W	0.0063	908	6
		C	0.0063	1,850	12
		E	0.0063	1,056	7
Longnose skates	Annual	W	0.0063	61	0
		C	0.0063	2,513	16

TABLE 13—PROPOSED 2017 AND 2018 GOA NON-EXEMPT AMERICAN FISHERIES ACT CATCHER VESSEL (CV) GROUNDFISH SIDEBOARD LIMITS—Continued

[Values are rounded to the nearest metric ton]

Species	Apportionments by season/gear	Area/component	Ratio of 1995–1997 non-exempt AFA CV catch to 1995–1997 TAC	Proposed 2017 and 2018 TACs [3]	Proposed 2017 and 2018 non-exempt AFA CV sideboard limit
		E	0.0063	632	4
Other skates	Annual	Gulfwide	0.0063	1,919	12
Sculpins	Annual	Gulfwide	0.0063	5,591	35
Sharks	Annual	Gulfwide	0.0063	4,514	28
Squids	Annual	Gulfwide	0.0063	1,148	7
Octopuses	Annual	Gulfwide	0.0063	4,878	31

[1] The Pacific cod A season for trawl gear does not open until January 20.
[2] The Pacific cod B season for trawl gear closes November 1.
[3] The Western and Central GOA area apportionments of pollock are considered ACLs.

Non-Exempt AFA Catcher Vessel Halibut PSC Limits

The halibut PSC sideboard limits for non-exempt AFA CVs in the GOA are based on the aggregate retained groundfish catch by non-exempt AFA CVs in each PSC target category from 1995 through 1997 divided by the retained catch of all vessels in that fishery from 1995 through 1997 (§ 679.64(b)(4)). Table 14 lists the proposed 2017 and 2018 non-exempt AFA CV halibut PSC limits for vessels using trawl gear in the GOA.

TABLE 14—PROPOSED 2017 AND 2018 NON-EXEMPT AMERICAN FISHERIES ACT CATCHER VESSEL HALIBUT PROHIBITED SPECIES CATCH (PSC) LIMITS FOR VESSELS USING TRAWL GEAR IN THE GOA

[PSC limits are rounded to the nearest metric ton]

Season	Season dates	Fishery category	Ratio of 1995–1997 non-exempt AFA CV retained catch to total retained catch	Proposed 2017 and 2018 PSC limit	Proposed 2017 and 2018 non-exempt AFA CV PSC limit
1	January 20–April 1	shallow-water	0.340	384	131
		deep-water	0.070	85	6
2	April 1–July 1	shallow-water	0.340	85	29
		deep-water	0.070	256	18
3	July 1–September 1	shallow-water	0.340	171	58
		deep-water	0.070	341	24
4	September 1–October 1	shallow-water	0.340	128	44
		deep-water	0.070	0	0
5	October 1–December 31	all targets	0.205	256	52
Annual		Total shallow-water			262
		Total deep-water			48
		Grand Total, all seasons and categories.		1,706	362

Non-AFA Crab Vessel Groundfish Sideboard Limits

Section 680.22 establishes groundfish sideboard limits for vessels with a history of participation in the Bering Sea snow crab fishery to prevent these vessels from using the increased flexibility provided by the Crab Rationalization Program to expand their level of participation in the GOA groundfish fisheries. Sideboard harvest limits restrict these vessels' catch to their collective historical landings in each GOA groundfish fishery (except the fixed-gear sablefish fishery). Sideboard limits also apply to landings made using an LLP license derived from the history of a restricted vessel, even if that LLP license is used on another vessel.

The basis for these sideboard harvest limits is described in detail in the final rules implementing the major provisions of the Crab Rationalization Program, including Amendments 18 and 19 to the Fishery Management Plan for Bering Sea/Aleutian Islands King and Tanner Crabs (Crab FMP) (70 FR 10174, March 2, 2005), Amendment 34 to the Crab FMP (76 FR 35772, June 20, 2011), Amendment 83 to the GOA FMP (76 FR 74670, December 1, 2011), and Amendment 45 to the Crab FMP (80 FR 28539, May 19, 2015).

Table 15 lists the proposed 2017 and 2018 groundfish sideboard limitations for non-AFA crab vessels. All targeted or incidental catch of sideboard species made by non-AFA crab vessels or associated LLP licenses will be deducted from these sideboard limits.

TABLE 15—PROPOSED 2017 AND 2018 GOA NON-AMERICAN FISHERIES ACT CRAB VESSEL GROUNDFISH SIDEBOARD LIMITS

[Values are rounded to the nearest metric ton]

Species	Season/gear	Area/component/gear	Ratio of 1996–2000 non-AFA crab vessel catch to 1996–2000 total harvest	Proposed 2017 and 2018 TACs	Proposed 2017 and 2018 non-AFA crab vessel sideboard limit
Pollock	A Season—January 20–March 10.	Shumagin (610)	0.0098	3,769	37
		Chirikof (620)	0.0031	42,732	132
		Kodiak (630)	0.0002	12,272	2
	B Season—March 10–May 31.	Shumagin (610)	0.0098	3,769	37
		Chirikof (620)	0.0031	49,996	155
		Kodiak (630)	0.0002	5,007	1
	C Season—August 25–October 1.	Shumagin (610)	0.0098	24,060	236
		Chirikof (620)	0.0031	15,176	47
		Kodiak (630)	0.0002	19,529	4
	D Season—October 1–November 1.	Shumagin (610)	0.0098	24,060	236
		Chirikof (620)	0.0031	15,175	47
		Kodiak (630)	0.0002	19,529	4
	Annual	WYK (640)	0.0000	9,209	
		SEO (650)	0.0000	9,920	
Pacific cod	A Season [1]—January 1–June 10.	W Jig CV	0.0000	14,699	
		W Hook-and-line CV	0.0004	14,699	6
		W Pot CV	0.0997	14,699	1,466
		W Pot C/P	0.0078	14,699	115
		W Trawl CV	0.0007	14,699	10
		C Jig CV	0.0000	19,175	
		C Hook-and-line CV	0.0001	19,175	2
		C Pot CV	0.0474	19,175	909
		C Pot C/P	0.0136	19,175	261
		C Trawl CV	0.0012	19,175	23
	B Season [2]—September 1–December 31	W Jig CV	0.0000	9,799	
		W Hook-and-line CV	0.0004	9,799	4
		W Pot CV	0.0997	9,799	977
		W Pot C/P	0.0078	9,799	76
		W Trawl CV	0.0007	9,799	7
		C Jig CV	0.0000	12,783	
		C Hook-and-line CV	0.0001	12,783	1
		C Pot CV	0.0474	12,783	606
		C Pot C/P	0.0136	12,783	174
		C Trawl CV	0.0012	12,783	15
	Annual	E inshore	0.0110	5,124	56
		E offshore	0.0000	569	
Sablefish	Annual, trawl gear	W	0.0000	233	
		C	0.0000	736	
		E	0.0000	173	
Flatfish, shallow-water	Annual	W	0.0059	13,250	78
		C	0.0001	17,680	2
		E	0.0000	3,925	
Flatfish, deep-water	Annual	W	0.0035	187	1
		C	0.0000	3,516	
		E	0.0000	5,578	
Rex sole	Annual	W	0.0000	1,318	
		C	0.0000	4,453	
		E	0.0000	1,736	
Arrowtooth flounder	Annual	W	0.0004	14,500	6
		C	0.0001	75,000	8
		E	0.0000	13,800	
Flathead sole	Annual	W	0.0002	8,650	2
		C	0.0004	15,400	6
		E	0.0000	3,800	
Pacific ocean perch	Annual	W	0.0000	2,709	
		C	0.0000	16,860	
		E	0.0000	4,620	
Northern rockfish	Annual	W	0.0005	430	0
		C	0.0000	3,338	
Shortraker rockfish	Annual	W	0.0013	38	0
		C	0.0012	301	0
		E	0.0009	947	1
Dusky rockfish	Annual	W	0.0017	159	0
		C	0.0000	3,791	
		E	0.0000	334	
Rougheye rockfish	Annual	W	0.0067	105	1
		C	0.0047	705	3
		E	0.0008	515	0
Demersal shelf rockfish	Annual	SEO	0.0000	231	
Thornyhead rockfish	Annual	W	0.0047	291	1
		C	0.0066	988	7
		E	0.0045	682	3
Other rockfish	Annual	W	0.0035	1,534	5

TABLE 15—PROPOSED 2017 AND 2018 GOA NON-AMERICAN FISHERIES ACT CRAB VESSEL GROUNDFISH SIDEBOARD LIMITS—Continued

[Values are rounded to the nearest metric ton]

Species	Season/gear	Area/component/gear	Ratio of 1996–2000 non-AFA crab vessel catch to 1996–2000 total harvest	Proposed 2017 and 2018 TACs	Proposed 2017 and 2018 non-AFA crab vessel sideboard limit
		C	0.0033	774	
		E	0.0000	2,000	
Atka mackerel	Annual	Gulfwide	0.0000	908	36
Big skate	Annual	W	0.0392	1,850	29
		C	0.0159	1,056	
		E	0.0000	61	2
Longnose skate	Annual	W	0.0392	2,513	40
		C	0.0159	632	
		E	0.0000	1,919	34
Other skates	Annual	Gulfwide	0.0176	5,591	98
Sculpins	Annual	Gulfwide	0.0176	4,514	79
Sharks	Annual	Gulfwide	0.0176	1,148	20
Squids	Annual	Gulfwide	0.0176	4,878	86
Octopuses	Annual	Gulfwide	0.0176	38	0

[1] The Pacific cod A season for trawl gear does not open until January 20.
[2] The Pacific cod B season for trawl gear closes November 1.

Rockfish Program Groundfish Sideboard and Halibut PSC Limitations

The Rockfish Program establishes three classes of sideboard provisions: CV groundfish sideboard restrictions, C/P rockfish sideboard restrictions, and C/P opt-out vessel sideboard restrictions. These sideboards are intended to limit the ability of rockfish harvesters to expand into other fisheries.

CVs participating in the Rockfish Program may not participate in directed fishing for dusky rockfish, northern rockfish, and Pacific ocean perch in the Western GOA and West Yakutat Districts from July 1 through July 31. Also, CVs may not participate in directed fishing for arrowtooth flounder, deep-water flatfish, and rex sole in the GOA from July 1 through July 31 (§ 679.82(d)).

C/Ps participating in Rockfish Program cooperatives are restricted by rockfish and halibut PSC sideboard limits. These C/Ps are prohibited from directed fishing for northern rockfish, Pacific ocean perch, and dusky rockfish in the Western GOA and West Yakutat District from July 1 through July 31. Holders of C/P-designated LLP licenses that opt out of participating in a Rockfish Program cooperative will be able to access those sideboard limits that are not assigned to Rockfish Program cooperatives. Table 16 lists the proposed 2017 and 2018 Rockfish Program C/P rockfish sideboard limits in the Western GOA and West Yakutat District. Due to confidentiality requirements associated with fisheries data, the sideboard limits for the West Yakutat District are not displayed.

TABLE 16—PROPOSED 2017 AND 2018 ROCKFISH PROGRAM SIDEBOARD LIMITS FOR THE WESTERN GOA AND WEST YAKUTAT DISTRICT BY FISHERY FOR THE CATCHER/PROCESSOR (C/P) SECTOR

[Values are rounded to the nearest metric ton]

Area	Fishery	C/P sector (% of TAC)	Proposed 2017 and 2018 TACs	Proposed 2017 and 2018 C/P sideboard limit
Western GOA	Dusky rockfish	72.3	159	115
	Pacific ocean perch	50.6	2,709	1,371
	Northern rockfish	74.3	430	319
West Yakutat District	Dusky rockfish	Confidential [1]	251	Confidential [1]
	Pacific ocean perch	Confidential [1]	2,818	Confidential [1]

[1] Not released due to confidentiality requirements associated with fish ticket data, as established by NMFS and the State of Alaska.

Under the Rockfish Program, the C/P sector is subject to halibut PSC sideboard limits for the trawl deep-water and shallow-water species fisheries from July 1 through July 31. No halibut PSC sideboard limits apply to the CV sector, as vessels participating in a rockfish cooperative receive a portion of the annual halibut PSC limit. C/Ps that opt out of the Rockfish Program would be able to access that portion of the deep-water and shallow-water halibut PSC sideboard limit not assigned to C/P rockfish cooperatives. The sideboard provisions for C/Ps that elect to opt out of participating in a rockfish cooperative are described in § 679.82(c), (e), and (f). Sideboard limits are linked to the catch history of specific vessels that may choose to opt out. After March 1, NMFS will determine which C/Ps have opted-out of the Rockfish Program in 2017, and will know the ratios and amounts used to calculate opt-out sideboard ratios. NMFS will then calculate any applicable opt-out sideboard limits and

post these limits on the Alaska Region Web site at *http://alaska fisheries.noaa.gov/sustainablefisheries/rockfish/*. Table 17 lists the 2017 and 2018 proposed Rockfish Program halibut PSC limits for the C/P sector.

TABLE 17—PROPOSED 2017 AND 2018 ROCKFISH PROGRAM HALIBUT MORTALITY LIMITS FOR THE CATCHER/PROCESSOR SECTOR

[Values are rounded to the nearest metric ton]

Sector	Shallow-water species fishery halibut PSC sideboard ratio (percent)	Deep-water species fishery halibut PSC sideboard ratio (percent)	Annual halibut mortality limit (mt)	Annual shallow-water species fishery halibut PSC sideboard limit (mt)	Annual deep-water species fishery halibut PSC sideboard limit (mt)
Catcher/processor	0.10	2.50	1,706	2	43

Amendment 80 Program Groundfish and PSC Sideboard Limits

Amendment 80 to the Fishery Management Plan for Groundfish of the Bering Sea and Aleutian Islands Management Area (Amendment 80 Program) established a limited access privilege program for the non-AFA trawl C/P sector. The Amendment 80 Program established groundfish and halibut PSC limits for Amendment 80 Program participants to limit the ability of participants eligible for the Amendment 80 Program to expand their harvest efforts in the GOA.

Section 679.92 establishes groundfish harvesting sideboard limits on all Amendment 80 Program vessels, other than the F/V *Golden Fleece,* to amounts no greater than the limits shown in Table 37 to part 679. Under § 679.92(d), the F/V *Golden Fleece* is prohibited from directed fishing for pollock, Pacific cod, Pacific ocean perch, dusky rockfish, and northern rockfish in the GOA.

Groundfish sideboard limits for Amendment 80 Program vessels operating in the GOA are based on their average aggregate harvests from 1998 through 2004. Table 18 lists the proposed 2017 and 2018 sideboard limits for Amendment 80 Program vessels. NMFS will deduct all targeted or incidental catch of sideboard species made by Amendment 80 Program vessels from the sideboard limits in Table 18.

TABLE 18—PROPOSED 2017 AND 2018 GOA GROUNDFISH SIDEBOARD LIMITS FOR AMENDMENT 80 PROGRAM VESSELS

[Values are rounded to the nearest metric ton]

Species	Season	Area	Ratio of Amendment 80 sector vessels 1998–2004 catch to TAC	Proposed 2017 and 2018 TAC (mt)	Proposed 2017 and 2018 Amendment 80 vessel sideboard limits (mt)
Pollock	A Season—January 20–February 25.	Shumagin (610)	0.003	3,769	11
		Chirikof (620)	0.002	42,732	85
		Kodiak (630)	0.002	12,272	25
	B Season—March 10–May 31.	Shumagin (610)	0.003	3,769	11
		Chirikof (620)	0.002	49,996	100
		Kodiak (630)	0.002	5,007	10
	C Season—August 25–September 15.	Shumagin (610)	0.003	24,060	72
		Chirikof (620)	0.002	15,176	30
		Kodiak (630)	0.002	19,529	39
	D Season—October 1–November 1.	Shumagin (610)	0.003	24,060	72
		Chirikof (620)	0.002	15,175	30
		Kodiak (630)	0.002	19,529	39
	Annual	WYK (640)	0.002	9,209	18
Pacific cod	A Season [1]—January 1–June 10.	W	0.020	14,699	294
		C	0.044	19,175	844
	B Season [2]—September 1–December 31.	W	0.020	9,799	196
		C	0.044	12,783	562
	Annual	WYK	0.034	5,693	194
Pacific ocean perch	Annual	W	0.994	2,709	2,693
		WYK	0.961	2,818	2,708
Northern rockfish	Annual	W	1.000	430	430
Dusky rockfish	Annual	W	0.764	159	121
		WYK	0.896	251	225

[1] The Pacific cod A season for trawl gear does not open until January 20.
[2] The Pacific cod B season for trawl gear closes November 1.

The halibut PSC sideboard limits for Amendment 80 Program vessels in the GOA are based on the historic use of halibut PSC by Amendment 80 Program vessels in each PSC target category from 1998 through 2004. These values are slightly lower than the average historic use to accommodate two factors: Allocation of halibut PSC cooperative

quota under the Rockfish Program and the exemption of the F/V *Golden Fleece* from this restriction (§ 679.92(b)(2)). Table 19 lists the proposed 2017 and 2018 halibut PSC sideboard limits for Amendment 80 Program vessels. These tables incorporate the maximum percentages of the halibut PSC sideboard limits that may be used by Amendment 80 Program vessels, as contained in Table 38 to 50 CFR part 679.

TABLE 19—PROPOSED 2017 AND 2018 HALIBUT PSC SIDEBOARD LIMITS FOR AMENDMENT 80 PROGRAM VESSELS IN THE GOA

[Values are rounded to the nearest metric ton]

Season	Season dates	Fishery category	Historic Amendment 80 use of the annual halibut PSC limit (ratio)	Proposed 2017 and 2018 annual PSC limit (mt)	Proposed 2017 and 2018 Amendment 80 vessel PSC sideboard limit (mt)
1	January 20–April 1	shallow-water	0.0048	1,706	8
		deep-water	0.0115	1,706	20
2	April 1–July 1	shallow-water	0.0189	1,706	32
		deep-water	0.1072	1,706	183
3	July 1–September 1	shallow-water	0.0146	1,706	25
		deep-water	0.0521	1,706	89
4	September 1–October 1	shallow-water	0.0074	1,706	13
		deep-water	0.0014	1,706	2
5	October 1–December 31	shallow-water	0.0227	1,706	39
		deep-water	0.0371	1,706	63
Annual		Total shallow-water			117
		Total deep-water			357
		Grand Total, all seasons and categories.			474

Classification

NMFS has determined that the proposed harvest specifications are consistent with the FMP and preliminarily determined that the proposed harvest specifications are consistent with the Magnuson-Stevens Act and other applicable laws, subject to further review after public comment.

This action is authorized under 50 CFR 679.20 and is exempt from review under Executive Orders 12866 and 13563.

NMFS prepared an EIS for this action and made it available to the public on January 12, 2007 (72 FR 1512). On February 13, 2007, NMFS issued the Record of Decision (ROD) for the Final EIS. A Supplemental Information Report (SIR) that assesses the need to prepare a Supplemental EIS is being prepared for the final action. Copies of the Final EIS, ROD, and SIR for this action are available from NMFS (see **ADDRESSES**). The Final EIS analyzes the environmental consequences of the proposed groundfish harvest specifications and alternative harvest strategies on resources in the action area. The Final EIS found no significant environmental consequences from the proposed action or its alternatives.

NMFS prepared an Initial Regulatory Flexibility Analysis (IRFA) as required by section 603 of the Regulatory Flexibility Act (RFA), analyzing the methodology for establishing the relevant TACs. The IRFA evaluated the impacts on small entities of alternative harvest strategies for the groundfish fisheries in the EEZ off Alaska. As set forth in the methodology, TACs are set to a level that fall within the range of ABCs recommended by the SSC; the sum of the TACs must achieve the OY specified in the FMP. While the specific numbers that the methodology produces may vary from year to year, the methodology itself remains constant.

A description of the proposed action, why it is being considered, and the legal basis for this proposed action are contained in the preamble above. A copy of the analysis is available from NMFS (see **ADDRESSES**). A summary of the IRFA follows.

The action under consideration is a harvest strategy to govern the catch of groundfish in the GOA. The preferred alternative is the existing harvest strategy in which TACs fall within the range of ABCs recommended by the SSC. This action is taken in accordance with the FMP prepared by the Council pursuant to the Magnuson-Stevens Act.

The entities directly regulated by this action are those that harvest groundfish in the EEZ of the GOA and in parallel fisheries within State of Alaska waters. These include entities operating CVs and C/Ps within the action area and entities receiving direct allocations of groundfish.

For RFA purposes only, NMFS has established a small business size standard for businesses, including their affiliates, whose primary industry is commercial fishing (see 50 CFR 200.2). A business primarily engaged in commercial fishing (NAICS code 11411) is classified as a small business if it is independently owned and operated, is not dominant in its field of operation (including its affiliates), and has combined annual receipts not in excess of $11 million for all its affiliated operations worldwide.

The IRFA shows that, in 2015, there were 969 individual CVs with gross revenues less than or equal to $11 million. This estimate accounts for corporate affiliations among vessels, and for cooperative affiliations among fishing entities, since some of the fishing vessels operating in the GOA are members of AFA inshore pollock cooperatives, GOA rockfish cooperatives, or BSAI Crab Rationalization Program cooperatives. Therefore, under the RFA, it is the aggregate gross receipts of all participating members of the cooperative that must meet the ''under $11 million'' threshold. Vessels that participate in these cooperatives are considered to be large entities within the meaning of the RFA. After accounting for membership in these cooperatives, there are an estimated 969 small CV entities remaining in the GOA

groundfish sector. This latter group of vessels had average gross revenues that varied by gear type. Average gross revenues for hook-and-line CVs, pot gear vessels, and trawl gear vessels are estimated to be $350,000, $760,000, and $1.85 million, respectively. Revenue data for the three C/Ps considered to be small entities are confidential. There are three C/Ps that are considered to be small entities; however, their revenue data is confidential.

The preferred alternative (Alternative 2) was compared to four other alternatives. Alternative 1 would have set TACs to generate fishing rates equal to the maximum permissible ABC (if the full TAC were harvested), unless the sum of TACs exceeded the GOA OY, in which case TACs would be limited to the OY. Alternative 3 would have set TACs to produce fishing rates equal to the most recent 5-year average fishing rate. Alternative 4 would have set TACs to equal the lower limit of the GOA OY range. Alternative 5, the ''no action alternative,'' would have set TACs equal to zero.

The TACs associated with the preferred harvest strategy are those adopted by the Council in October 2016, as per Alternative 2. OFLs and ABCs for the species were based on recommendations prepared by the Council's GOA Plan Team in September 2016, and reviewed by the Council's SSC in October 2016. The Council based its TAC recommendations on those of its AP, which were consistent with the SSC's OFL and ABC recommendations.

Alternative 1 selects harvest rates that would allow fishermen to harvest stocks at the level of ABCs, unless total harvests were constrained by the upper bound of the GOA OY of 800,000 mt. As shown in Table 1 of the preamble, the sum of ABCs in 2017 and 2018 would be 708,629 mt, which falls below the upper bound of the OY range. The sum of TACs is 573,872 mt, which is less than the sum of ABCs. In this instance, Alternative 1 is consistent with the preferred alternative (Alternative 2), meets the objectives of that action, and has small entity impacts that are equivalent to the preferred alternative. In some instances, the selection of Alternative 1 would not reflect the practical implications that increased TACs (where the sum of TACs equals the sum of ABCs) for some species probably would not be fully harvested. This could be due to a lack of commercial or market interest in such species. Additionally, an underharvest of some TACs could result due to constraints such as the fixed, and therefore constraining, PSC limits associated with the harvest of the GOA groundfish species.

Alternative 3 selects harvest rates based on the most recent 5 years of harvest rates (for species in Tiers 1 through 3) or for the most recent 5 years of harvests (for species in Tiers 4 through 6). This alternative is inconsistent with the objectives of this action, the Council's preferred harvest strategy, because it does not take account of the most recent biological information for this fishery. NMFS annually conducts at-sea stock surveys for different species, as well as statistical modeling, to estimate stock sizes and permissible harvest levels. Actual harvest rates or harvest amounts are a component of these estimates, but in and of themselves may not accurately portray stock sizes and conditions. Harvest rates are listed for each species category for each year in the SAFE report (see **ADDRESSES**).

Alternative 4 would lead to significantly lower harvests of all species and reduce the TACs from the upper end of the OY range in the GOA, to its lower end of 116,000 mt. Overall, this would reduce 2017 TACs by about 80 percent and would lead to significant reductions in harvests of species harvested by small entities. While reductions of this size would be associated with offsetting price increases, the size of these increases is very uncertain. There are close substitutes for GOA groundfish species available in significant quantities from the Bering Sea and Aleutian Islands management area. While production declines in the GOA would undoubtedly be associated with significant price increases in the GOA, these increases would still be constrained by production of substitutes, and are very unlikely to offset revenue declines from smaller production. Thus, this alternative would have a detrimental impact on small entities.

Alternative 5, which sets all harvests equal to zero, would have a significant adverse economic impact on small entities and would be contrary to obligations to achieve OY on a continuing basis, as mandated by the Magnuson-Stevens Act. Under Alternative 5, all 969 individual CVs impacted by this rule would have gross revenues of $0. Additionally, the three small C/Ps impacted by this rule also would have gross revenues of $0.

The proposed harvest specifications (Alternative 2) extend the current 2017 OFLs, ABCs, and TACs to 2017 and 2018. As noted in the IRFA, the Council may modify these OFLs, ABCs, and TACs in December 2016, when it reviews the November 2016 SAFE report from its Groundfish Plan Team, and the December 2016 Council meeting reports of its SSC and AP. Because the 2017 TACs in the proposed 2017 and 2018 harvest specifications are unchanged from the 2017 TACs, NMFS does not expect adverse impacts on small entities. Also, NMFS does not expect any changes made by the Council in December 2016 to have significant adverse impacts on small entities.

This action does not modify recordkeeping or reporting requirements, or duplicate, overlap, or conflict with any Federal rules.

Adverse impacts on marine mammals or endangered species resulting from fishing activities conducted under this rule are discussed in the Final EIS and its accompanying annual SIRs (see **ADDRESSES**).

Authority: 16 U.S.C. 773 *et seq.;* 16 U.S.C. 1540(f); 16 U.S.C. 1801 *et seq.;* 16 U.S.C. 3631 *et seq.;* Pub. L. 105–277; Pub. L. 106–31; Pub. L. 106–554; Pub. L. 108–199; Pub. L. 108–447; Pub. L. 109–241; Pub. L. 109–479.

Dated: November 30, 2016.

Samuel D. Rauch III,

Deputy Assistant Administrator for Regulatory Programs, National Marine Fisheries Service.

[FR Doc. 2016–29150 Filed 12–5–16; 8:45 am]

BILLING CODE 3510–22–P

Notices

Federal Register

Vol. 81, No. 234

Tuesday, December 6, 2016

This section of the FEDERAL REGISTER contains documents other than rules or proposed rules that are applicable to the public. Notices of hearings and investigations, committee meetings, agency decisions and rulings, delegations of authority, filing of petitions and applications and agency statements of organization and functions are examples of documents appearing in this section.

DEPARTMENT OF AGRICULTURE

Agricultural Marketing Service

[Doc. No. AMS–NOP–16–0085; NOP–16–06]

National Organic Program: Notice of Draft Guidance for Calculating the Percentage of Organic Ingredients in Multi-Ingredient Products

AGENCY: Agricultural Marketing Service, USDA.

ACTION: Notice of availability of draft guidance with request for comments.

SUMMARY: The Agricultural Marketing Service (AMS) is announcing the availability of a draft guidance document intended for use by accredited certifying agents and certified handling operations. The draft guidance document is entitled as follows: Calculating Percentage Organic in Multi-Ingredient Products (NOP 5037). This draft guidance document is intended to inform the public of AMS' current thinking on this topic. AMS invites organic producers, handlers, certifying agents, material evaluation programs, consumers and other interested parties to submit comments.

DATES: Comments must be submitted on or before February 6, 2017.

ADDRESSES: Submit written requests for hard copies of this draft guidance to Paul I. Lewis, Ph.D., Standards Division Director, National Organic Program (NOP), USDA–AMS–NOP, 1400 Independence Ave. SW., Room 2646—So., Ag Stop 0268, Washington, DC 20250–0268. See the **SUPPLEMENTARY INFORMATION** section for electronic access to the draft guidance document.

You may submit comments on this draft guidance document by any of the following methods:

- *Federal eRulemaking Portal: http://www.regulations.gov.* Follow the instructions for submitting comments.
- *Mail:* Paul I. Lewis, Ph.D., Standards Division Director, National Organic Program, USDA–AMS–NOP, 1400 Independence Ave. SW., Room 2646—So., Ag Stop 0268, Washington, DC 20250–0268.

Instructions: Written comments responding to this request should be identified with the document number AMS–NOP–XX–XXXX; NOP–16–06. You should clearly indicate your position and the reasons supporting your position. If you are suggesting changes to the draft guidance document, you should include recommended language changes, as appropriate, along with any relevant supporting documentation. AMS is specifically requesting that stakeholders comment and quantify any impacts that the guidance will have on certified operations. AMS is also requesting comments from accredited certifying agents on the policy related to the calculation of multi-ingredient ingredients. How is the industry currently calculating organic products that use organic ingredients that contain several ingredients? What are the sound and sensible approaches currently being used?

USDA intends to make available all comments, including names and addresses when provided, regardless of submission procedure used, on *www.regulations.gov* and at USDA, AMS, NOP, Room 2646—South building, 1400 Independence Ave. SW., Washington, DC, from 9 a.m. to noon and from 1 to 4 p.m., Monday through Friday (except official Federal holidays). Persons wanting to visit the USDA South building to view comments from the public to this notice are requested to make an appointment by calling (202) 720–3252.

FOR FURTHER INFORMATION CONTACT: Paul I. Lewis, Ph.D., Standards Division Director, National Organic Program (NOP), USDA–AMS–NOP, 1400 Independence Ave. SW., Room 2646—So., Ag Stop 0268, Washington, DC 20250–0268; Telephone: (202) 720–3252; Fax: (202) 260–9151; Email: *NOP.Guidance@ams.usda.gov;* or visit the NOP Web site at: *www.ams.usda.gov/nop.*

SUPPLEMENTARY INFORMATION:

I. Background

The draft guidance document announced through this notice was developed to respond to an April 2013 National Organic Standards Board (NOSB) request that the National Organic Program (NOP) correct and/or clarify the requirements codified at 7 CFR 205.302(a), calculating the percentage of organically produced ingredients. Section 205.302(a)(1) states the method of calculation as ''[d]ividing the total net weight (excluding water and salt) of combined organic ingredients at formulation by the total weight (excluding water and salt) of the finished product.'' Current interpretation of 205.302(a)(1) is to ''[d]ivid[e] the total net weight (excluding water and salt) of combined *organic ingredients* at formulation by the total weight (excluding water and salt) of *all ingredients.*'' [Emphasis added.]

The NOSB recommendation asked the NOP to: (1) Correct the regulatory language at § 205.302(a) to clarify that organic percentages should be calculated by dividing the total net weight (excluding water and salt) of combined organic ingredients at formulation by the total net weight (excluding water and salt) of all ingredients. The NOSB asked that the NOP clarify that the percentage of organic ingredients in a product should be calculated based on the net weight of ''all ingredients'' in that product, and not the net weight of the ''finished product'' because most products lose weight during processing; (2) Clarify how to calculate the organic percentages of a multi-ingredient product that contains ingredients that are themselves composed of more than one ingredient; (3) Clarify when to exclude salt and water from ingredients; (4) Provide guidance on how to calculate raw agricultural product and processed single ingredient ingredients; and to (5) Develop and publish example self-calculating forms on items related to the organic percentage of each ingredient and the exclusion of salt and water. This guidance addresses the NOSB recommendation.

The draft guidance is available from AMS on its Web site at *http://www.ams.usda.gov/rules-regulations/organic/draft-guidance.* If finalized, any final guidance would be available in ''The Program Handbook: Guidance and Instructions for Accredited Certifying Agents (ACAs) and Certified Operations''. This Handbook provides those who own, manage, or certify organic operations with guidance and

instructions that can assist them in complying with the USDA organic regulations. The current edition of the Program Handbook is available online at *http://www.ams.usda.gov/rules-regulations/organic/handbook.*

II. Significance of Guidance

This draft guidance document is being issued in accordance with the Office of Management and Budget (OMB) Bulletin on Agency Good Guidance Practices (GGPs) (January 25, 2007, 72 FR 3432–3440).

The purpose of GGPs is to ensure that program guidance documents are developed with adequate public participation, are readily available to the public, and are not applied as binding requirements. The draft guidance, when finalized, will represent AMS' current thinking on these topics. It does not create or confer any rights for, or on, any person and does not operate to bind AMS or the public. Guidance documents are intended to provide a uniform method for operations to comply that can reduce the burden of developing their own methods and simplify audits and inspections. Alternative approaches that can demonstrate compliance with the Organic Foods Production Act (OFPA), as amended (7 U.S.C. 6501–6522), and its implementing regulations are also acceptable. AMS strongly encourages industry to discuss alternative approaches with the NOP before implementing them to avoid unnecessary or wasteful expenditures of resources and to ensure the proposed alternative approach complies with the Act and its implementing regulations.

III. Electronic Access

Persons with access to Internet may obtain the draft guidance at either AMS' Web site at *http://www.ams.usda.gov/nop* or *http://www.regulations.gov.* Requests for hard copies of the draft guidance documents can be obtained by submitting a written request to the person listed in the **ADDRESSES** section of this Notice.

Authority: 7 U.S.C. 6501–6522.

Dated: November 30, 2016.

Elanor Starmer,

Administrator, Agricultural Marketing Service.

[FR Doc. 2016–29173 Filed 12–5–16; 8:45 am]

BILLING CODE 3410–02–P

DEPARTMENT OF AGRICULTURE

Office of the Secretary

Notice of Request for Extension of a Currently Approved Information Collection

AGENCY: Office of Homeland Security and Emergency Coordination.

ACTION: Notice and request for comments.

SUMMARY: In accordance with the Paperwork Reduction Act of 1995, this notice announces the Office of Homeland Security and Emergency Coordination's (OHSEC) intention to request an extension for and revision to a currently approved information collection for the U.S. Department of Agriculture (USDA) Personal Identity Verification (PIV) Request for Credential, the USDA Homeland Security Presidential Directive 12 (HSPD–12) program. HSPD–12 establishes a mandatory, Government-wide standard for secure and reliable forms of identification (credentials) issued by the Federal Government to its Federal employees, non-Federal employees and contractors. The Office of Management and Budget (OMB) mandated that these credentials be issued to all Federal Government employees, contractors, and other applicable individuals who require long-term access to federally controlled facilities and/or information systems. The HSPD–12 compliant program is jointly owned and administered by the Office of the Chief Information Officer (OCIO) and OHSEC.

DATES: Comments on this notice must be received by December 15, 2016, to be assured of consideration.

FOR FURTHER INFORMATION CONTACT: Richard Holman, Chief, Physical Security Division, Office of Homeland Security and Emergency Coordination, USDA, 1400 Independence Avenue SW., Room 1457, Washington DC 20250.

SUPPLEMENTARY INFORMATION:

Title: USDA PIV Request for Credential.

OMB Number: 0505–0022.

Expiration Date of Approval: February 28, 2017.

Type of Request: Extension and revision of a currently approved information collection.

Abstract: The HSPD–12 information collection is required for establishing the applicant's identity for PIV credential issuance. The information requested must be provided by Federal employees, contractors and other applicable individuals when applying for a USDA credential (identification card). This information collection is necessary to comply with the requirements outlined in Homeland Security Presidential Directive (HSPD) 12, and Federal Information Processing Standard (FIPS) 201–2. USDA must implement an identity proofing, registration, and issuance process consistent with the requirements outlined in FIPS 201–2. This information collection form was required as part of USDA's identity proofing and registration process. After October 27, 2006, form AD–1197 has been eliminated and the identity process has been streamlined with the addition of a web-based HSPD–12 system. As USDA continues the HSPD–12 program, one estimate of burden has been calculated and one process description has been included.

Estimate of Burden: Public reporting burden for this collection of information is estimated to average 1.5 hours. The burden is estimated based on the three prerequisites for PIV Credential issuance as well as the receipt of the PIV Credential itself.

Respondents: New long term contractors, affiliates, and employees must undergo the information collection process. Existing contractors/employees/affiliates must undergo the process to receive a PIV Credential.

Estimated Number of Respondents: Estimated Annual Number of Respondents: 12,000.

Estimated Number of Responses per Respondent: Each respondent should complete one response.

Estimated Total One-Time Burden on Respondents: 18,000 hours.

Comments are invited on: (1) Whether the proposed collection of information is necessary for the proper performance of the functions of the agency, including whether the information will have practical utility; (2) the accuracy of the agency's estimate of the burden of the proposed collection of information including the validity of the methodology and assumptions used; (3) ways to enhance the quality, utility, and clarity of the information to be collected; and (4) ways to minimize the burden of the collection of information on those who are to respond, including the use of appropriate automated, electronic, mechanical, or other technological collection techniques or other forms of information technology. Comments may be sent to Richard Holman. All comments received will be available for public inspection during regular business hours at the same address.

All responses to this notice will be summarized and included in the request

for OMB approval. All comments will become a matter of public record.

Dr. Gregory L. Parham,

Assistant Secretary for Administration.

[FR Doc. 2016–29185 Filed 12–5–16; 8:45 am]

BILLING CODEP

DEPARTMENT OF AGRICULTURE

Animal and Plant Health Inspection Service

[Docket No. APHIS–2016–0087]

Notice of Request for Reinstatement of an Information Collection; Standards for Privately Owned Quarantine Facilities for Ruminants

AGENCY: Animal and Plant Health Inspection Service, USDA.

ACTION: Reinstatement of an information collection; comment request.

SUMMARY: In accordance with the Paperwork Reduction Act of 1995, this notice announces the Animal and Plant Health Inspection Service's intention to request a reinstatement of an information collection associated with regulations for privately owned quarantine facilities for ruminants.

DATES: We will consider all comments that we receive on or before February 6, 2017.

ADDRESSES: You may submit comments by either of the following methods:

- *Federal eRulemaking Portal:* Go to *http://www.regulations.gov/#!docketDetail;D=APHIS-2016-0087.*
- *Postal Mail/Commercial Delivery:* Send your comment to Docket No. APHIS–2016–0087, Regulatory Analysis and Development, PPD, APHIS, Station 3A–03.8, 4700 River Road Unit 118, Riverdale, MD 20737–1238.

Supporting documents and any comments we receive on this docket may be viewed at *http://www.regulations.gov/#!docketDetail;D=APHIS-2016-0087* or in our reading room, which is located in room 1141 of the USDA South Building, 14th Street and Independence Avenue SW., Washington, DC. Normal reading room hours are 8 a.m. to 4:30 p.m., Monday through Friday, except holidays. To be sure someone is there to help you, please call (202) 799–7039 before coming.

FOR FURTHER INFORMATION CONTACT: For information on the regulations for privately owned quarantine facilities for ruminants, contact Dr. Oriana Beemer, Staff Veterinarian, Live Animal Imports, National Import Export Services, VS, APHIS, 4700 River Road Unit 39, Riverdale, MD 20737; (301) 851–3300. For copies of more detailed information on the information collection, contact Ms. Kimberly Hardy, APHIS' Information Collection Coordinator, at (301) 851–2483.

SUPPLEMENTARY INFORMATION:

Title: Standards for Privately Owned Quarantine Facilities for Ruminants.

OMB Control Number: 0579–0232.

Type of Request: Reinstatement of an information collection.

Abstract: The Animal Health Protection Act (7 U.S.C. 8301 *et seq.*), authorizes the Secretary of Agriculture to, among other things, prohibit or restrict the importation and interstate movement of animals and animal products into the United States to prevent the introduction of animal diseases and pests.

The regulations in 9 CFR part 93 govern the importation into the United States of specified animals and animal products in order to help prevent the introduction of various animal diseases into the United States. The regulations in part 93 require, among other things, that certain animals, as a condition of entry, be quarantined upon arrival in the United States. The Animal and Plant Health Inspection Service operates animal quarantine facilities and also authorizes the use of quarantine facilities that are privately owned and operated for certain animal importations.

The regulations in subpart D of part 93 (9 CFR 93.400 through 93.436) pertain to the importation of ruminants. Ruminants include all animals that chew the cud, such as cattle, buffaloes, sheep, goats, deer, antelopes, camels, llamas, and giraffes. Ruminants imported into the United States must be quarantined upon arrival for at least 30 days, with certain exceptions. Ruminants from Canada and Mexico are not subject to this quarantine.

The regulations for privately owned quarantine facilities for ruminants require the use of certain information collection activities, including an application for facility approval, a compliance agreement explaining the conditions under which the facility must be operated, creation and maintenance of a daily log of persons entering and leaving the facility while quarantine is in process, request for variance, a manual of standard operating procedures, and maintenance of certain records covering quarantine operations.

We are asking the Office of Management and Budget (OMB) to approve our use of these information collection activities for 3 years.

The purpose of this notice is to solicit comments from the public (as well as affected agencies) concerning our information collection. These comments will help us:

(1) Evaluate whether the collection of information is necessary for the proper performance of the functions of the Agency, including whether the information will have practical utility;

(2) Evaluate the accuracy of our estimate of the burden of the collection of information, including the validity of the methodology and assumptions used;

(3) Enhance the quality, utility, and clarity of the information to be collected; and

(4) Minimize the burden of the collection of information on those who are to respond, through use, as appropriate, of automated, electronic, mechanical, and other collection technologies; *e.g.,* permitting electronic submission of responses.

Estimate of burden: The public reporting burden for this collection of information is estimated to average 1.07 hours per response.

Respondents: Owners/operators of privately owned quarantine facilities for ruminants.

Estimated annual number of respondents: 5.

Estimated annual number of responses per respondent: 12.

Estimated annual number of responses: 60.

Estimated total annual burden on respondents: 64 hours. (Due to averaging, the total annual burden hours may not equal the product of the annual number of responses multiplied by the reporting burden per response.)

All responses to this notice will be summarized and included in the request for OMB approval. All comments will also become a matter of public record.

Done in Washington, DC, this 30th day of November 2016.

Kevin Shea,

Administrator, Animal and Plant Health Inspection Service.

[FR Doc. 2016–29168 Filed 12–5–16; 8:45 am]

BILLING CODE 3410–34–P

DEPARTMENT OF AGRICULTURE

Animal and Plant Health Inspection Service

[Docket No. APHIS–2016–0085]

Notice of Request for Extension of Approval of an Information Collection; Export Health Certificate for Animal Products

AGENCY: Animal and Plant Health Inspection Service, USDA.

ACTION: Extension of approval of an information collection; comment request.

SUMMARY: In accordance with the Paperwork Reduction Act of 1995, this notice announces the Animal and Plant Health Inspection Service's intention to request an extension of approval of an information collection associated with the export of animal products from the United States.

DATES: We will consider all comments that we receive on or before February 6, 2017.

ADDRESSES: You may submit comments by either of the following methods:

- *Federal eRulemaking Portal:* Go to *http://www.regulations.gov/#!docketDetail;D=APHIS-2016-0085*.
- *Postal Mail/Commercial Delivery:* Send your comment to Docket No. APHIS–2016–0085, Regulatory Analysis and Development, PPD, APHIS, Station 3A–03.8, 4700 River Road Unit 118, Riverdale, MD 20737–1238.

Supporting documents and any comments we receive on this docket may be viewed at *http://www.regulations.gov/#!docketDetail;D=APHIS-2016-0085* or in our reading room, which is located in room 1141 of the USDA South Building, 14th Street and Independence Avenue SW., Washington, DC. Normal reading room hours are 8 a.m. to 4:30 p.m., Monday through Friday, except holidays. To be sure someone is there to help you, please call (202) 799–7039 before coming.

FOR FURTHER INFORMATION CONTACT: For information on the export of animal products from the United States, contact Dr. Dawn Hunter, Director, Export Products, National Import Export Services, VS, APHIS, 4700 River Road Unit 40, Riverdale, MD 20737; (301) 851–3333. For copies of more detailed information on the information collection, contact Ms. Kimberly Hardy, APHIS' Information Collection Coordinator, at (301) 851–2483.

SUPPLEMENTARY INFORMATION:

Title: Export Health Certificate for Animal Products.

OMB Control Number: 0579–0256.

Type of Request: Extension of approval of an information collection.

Abstract: The export of agricultural commodities, including animals and animal products, is a major business in the United States and contributes to a favorable balance of trade. To facilitate the export of U.S. animals and animal products, U.S. Department of Agriculture's (USDA's) Animal and Plant Health Inspection Service (APHIS) maintains information regarding the import health requirements of other countries for animals and animal products exported from the United States. The regulations for export certification of animals and animal products are contained in 9 CFR parts 91 and 156.

Many countries that import animal products from the United States require a certification from APHIS that the United States is free of certain diseases. These countries may also require that our certification statement contain additional declarations regarding the U.S. animal products being exported. This certification must carry the USDA seal and be endorsed by an APHIS representative (*e.g.,* a Veterinary Medical Officer). The certification process involves the use of information collection activities, including an animal products export certificate and request for a hearing. An exporter can request a hearing to appeal a decision if a request for a certificate is not granted due to an exporter not meeting certain requirements in part 156 or if a certificate is denied or withdrawn by Veterinary Services if it is determined that an issued certificate has been altered or parts imitated.

We are asking the Office of Management and Budget (OMB) to approve our use of these information collection activities for an additional 3 years.

The purpose of this notice is to solicit comments from the public (as well as affected agencies) concerning our information collection. These comments will help us:

(1) Evaluate whether the collection of information is necessary for the proper performance of the functions of the Agency, including whether the information will have practical utility;

(2) Evaluate the accuracy of our estimate of the burden of the collection of information, including the validity of the methodology and assumptions used;

(3) Enhance the quality, utility, and clarity of the information to be collected; and

(4) Minimize the burden of the collection of information on those who are to respond, through use, as appropriate, of automated, electronic, mechanical, and other collection technologies; *e.g.,* permitting electronic submission of responses.

Estimate of Burden: The public reporting burden for this collection of information is estimated to average 0.32 hours per response.

Respondents: Exporters of U.S. animal products.

Estimated Annual Number of Respondents: 43,467.

Estimated Annual Number of Responses per Respondent: 4.25.

Estimated Annual Number of Responses: 184,737.

Estimated Total Annual Burden on Respondents: 59,117 hours. (Due to averaging, the total annual burden hours may not equal the product of the annual number of responses multiplied by the reporting burden per response.)

All responses to this notice will be summarized and included in the request for OMB approval. All comments will also become a matter of public record.

Done in Washington, DC, this 30th day of November 2016.

Kevin Shea,

Administrator, Animal and Plant Health Inspection Service.

[FR Doc. 2016–29172 Filed 12–5–16; 8:45 am]

BILLING CODE 3410–34–P

DEPARTMENT OF AGRICULTURE

Grain Inspection, Packers and Stockyards Administration

Solicitation of Nominations for Members of the USDA Grain Inspection Advisory Committee

AGENCY: Grain Inspection, Packers and Stockyards Administration, USDA.

ACTION: Notice to solicit nominees.

SUMMARY: The Department of Agriculture's (USDA) Grain Inspection, Packers and Stockyards Administration (GIPSA) is seeking nominations for individuals to serve on the USDA Grain Inspection Advisory Committee (Advisory Committee). The Advisory Committee meets twice annually to advise GIPSA on the programs and services it delivers under the U.S. Grain Standards Act (USGSA). Recommendations by the Advisory Committee help GIPSA better meet the needs of its customers who operate in a dynamic and changing marketplace.

DATES: GIPSA will consider nominations received by January 20, 2017.

ADDRESSES: Submit nominations for the Advisory Committee by completing form AD–755 and mail to:

- Terri L. Henry, U.S. Department of Agriculture, 1400 Independence Ave. SW., Rm. 2542–S, Mail Stop 3611, Washington, DC 20250–3611, or
- FAX: 202–690–2173.

Form AD–755 may be obtained via USDA's Web site: *http://www.gipsa.usda.gov/fgis/forms-fgis/ad755.pdf.*

FOR FURTHER INFORMATION CONTACT: Terri L. Henry, telephone (202) 205–8281 or email *Terri.L.Henry@usda.gov.*

SUPPLEMENTARY INFORMATION: As required by section 21 of the USGSA (7 U.S.C. 87j), as amended, the Secretary of Agriculture (Secretary) established the Advisory Committee on September 29, 1981, to provide advice to the GIPSA Administrator on implementation of the USGSA. As specified in the USGSA, each member's term is 3 years and no member may serve successive terms.

The Advisory Committee consists of 15 members, appointed by the Secretary, who represent the interests of grain producers, processors, handlers, merchandisers, consumers, exporters, and scientists with expertise in research related to the policies in section 2 of the USGSA (7 U.S.C. 74). While members of the Advisory Committee serve without compensation, USDA reimburses them for travel expenses, including per diem in lieu of subsistence, for travel away from their homes or regular places of business in performance of Advisory Committee service (see 5 U.S.C. 5703).

A list of current Advisory Committee members and other relevant information are available on the GIPSA at *http://www.gipsa.usda.gov/fgis/adcommit.html.*

GIPSA is seeking nominations for individuals to serve on the Advisory Committee to replace seven members whose terms will expire April 1, 2017.

Nominations are open to all individuals without regard to race, color, religion, gender, national origin, age, mental or physical disability, marital status, or sexual orientation. To ensure that recommendations of the Advisory Committee take into account the needs of the diverse groups served by the USDA, membership shall include, to the extent practicable, individuals with demonstrated ability to represent minorities, women, and persons with disabilities.

The final selection of Advisory Committee members and alternates is made by the Secretary.

Larry Mitchell,

Administrator, Grain Inspection, Packers and Stockyards Administration.

[FR Doc. 2016–29229 Filed 12–5–16; 8:45 am]

BILLING CODE 3410–KD–P

DEPARTMENT OF COMMERCE

International Trade Administration

[A–570–863]

Honey From the People's Republic of China: Preliminary Intent To Rescind New Shipper Review

AGENCY: Enforcement and Compliance, International Trade Administration, Department of Commerce.

SUMMARY: The Department is conducting a new shipper review (''NSR'') covering the period of review (''POR'') of December 1, 2014, through November 30, 2015. Because the sales made by Shanghai Sunbeauty Trading Co., Ltd. (''Sunbeauty'') are not *bona fide,* we have preliminarily determined to rescind this NSR.

DATES: Effective December 6, 2016.

FOR FURTHER INFORMATION CONTACT: Kabir Archuletta or Carrie Bethea, AD/CVD Operations, Office V, Enforcement and Compliance, International Trade Administration, U.S. Department of Commerce, 1401 Constitution Avenue NW., Washington, DC 20230; telephone: (202) 482–2593 or (202) 482–1491, respectively.

SUPPLEMENTARY INFORMATION:

Background

In response to a December 17, 2015 request from Sunbeauty,[1] on February 3, 2016, the Department published the notice of initiation of a new shipper review of honey for the period December 1, 2014 to November 30, 2015.[2] On June 14, 2016, the Department extended the deadline for issuing the preliminary results by 120 days to November 30, 2016.[3]

The Department sent the NSR antidumping duty questionnaire to Sunbeauty on February 3, 2016,[4] to which it responded in a timely manner.[5] Between March 2016 and August 2016, the Department issued supplemental questionnaires to Sunbeauty, to which it responded in a timely manner.[6] Petitioner submitted comments on Sunbeauty's questionnaire response between March and September 2016.[7] Sunbeauty submitted rebuttal comments to Petitioner's comments between March and September 2016.[8]

Scope of the Order

The products covered by this order are natural honey, artificial honey containing more than 50 percent natural honey by weight, preparations of natural honey containing more than 50 percent natural honey by weight and flavored honey. The subject merchandise includes all grades and colors of honey whether in liquid, creamed, comb, cut comb, or chunk form, and whether packaged for retail or in bulk form.

The merchandise subject to this order is currently classifiable under subheadings 0409.00.00, 1702.90.90 and 2106.90.99 of the Harmonized Tariff Schedule of the United States (''HTSUS''). Although the HTSUS subheadings are provided for convenience and customs purposes, the Department's written description of the merchandise under order is dispositive.

Methodology

The Department is conducting this review in accordance with section 751(a)(2)(B) of the Tariff Act of 1930, as amended (''the Act''), and 19 CFR 351.214. For a full description of the methodology underlying our conclusions, *see* the Preliminary Decision Memorandum.

The Preliminary Decision Memorandum is a public document and is on file electronically via Enforcement and Compliance's Antidumping and Countervailing Duty Centralized Electronic Service System (''ACCESS''). ACCESS is available to registered users at *http://access.trade.gov* and in the Department's Central Records Unit, room B8024 of the main Department of Commerce building. In addition, a

[1] *See* Request for NSR.

[2] *See Initiation Notice.*

[3] *See* Memorandum to Christian Marsh, Deputy Assistant Secretary for Antidumping and Countervailing Duty Operations, through James C. Doyle, Director, Office V, Antidumping and Countervailing Duty Operations ''Honey from the People's Republic of China: Extension of Deadline for Preliminary Results of New Shipper Review'' (June 14, 2016).

[4] *See* Letter to Shanghai Sunbeauty Co., Ltd. from Catherine Bertrand, Program Manager, Office V, regarding, ''New Shipper Questionnaire,'' dated February 3, 2016.

[5] *See* Letter to the Secretary from Shanghai Sunbeauty Trading Co., Ltd., regarding, ''Honey from the People's Republic of China: Shanghai Sunbeauty Section A Response,'' dated March 2, 2016; Letter to the Secretary from Shanghai Sunbeauty Trading Co., Ltd., regarding, ''Honey from the People's Republic of China: Response to Importer-Specific Questions,'' dated March 2, 2016.

[6] *See, e.g.,* Letter to Shanghai Sunbeauty Co., Ltd., regarding, ''Antidumping Duty New Shipper Review of Honey from the People's Republic of China—Supplemental Section AC Questionnaire,'' dated July 7, 2016.

[7] Petitioner is the American Honey Producers Association and Sioux Honey Association. *See, e.g.,* Letter to the Secretary from Petitioners, regarding, ''Honey from the People's Republic of China—Petitioners' Submission of New Factual Information to Rebut, Clarify, or Correct, Information Contained in Sunbeauty's Importer-Specific Questionnaire,'' dated August 8, 2016.

[8] *See, e.g.,* Letter to the Secretary from Shanghai Sunbeauty Trading Co., Ltd., regarding, ''Honey from the People's Republic of China: Rebuttal Comments on CBP Entry Documentation,'' dated March 28, 2016.

complete version of the Preliminary Decision Memorandum can be accessed directly on the Internet at *http://enforcement.trade.gov/frn/*. The signed Preliminary Decision Memorandum and the electronic versions of the Preliminary Decision Memorandum are identical in content.

Preliminary Rescission of Sunbeauty New Shipper Review

For the reasons detailed in the Preliminary Decision Memorandum, the Department preliminarily finds that, Sunbeauty's sales under review are not *bona fide* transactions. As such, the Department preliminarily finds that we cannot rely on these sales to calculate a dumping margin and there are no sales on which we can base this review. Consequently, the Department is preliminarily rescinding the new shipper review of Sunbeauty.

Disclosure and Public Comment

The Department will disclose the analysis performed for these preliminary results to the parties within five days of the date of publication of this notice in accordance with 19 CFR 351.224(b). Interested parties may submit written comments by no later than 30 days after the date of publication of these preliminary results of review.[9] Rebuttals, limited to issues raised in the written comments, may be filed by no later than five days after the written comments are filed.[10]

Any interested party may request a hearing within 30 days of publication of this notice.[11] Hearing requests should contain the following information: (1) The party's name, address, and telephone number; (2) the number of participants; and (3) a list of the issues to be discussed. Oral presentations will be limited to issues raised in the briefs. If a request for a hearing is made, parties will be notified of the time and date for the hearing to be held at the U.S. Department of Commerce, 1401 Constitution Avenue NW., Washington, DC 20230.[12]

The Department intends to issue the final results of this new shipper review, which will include the results of its analysis of issues raised in any such comments, within 90 days of publication of these preliminary results, pursuant to section 751(a)(2)(B)(iv) of the Act.

Assessment Rates

Upon completion of the final results, pursuant to 19 CFR 351.212(b), the Department will determine, and the U.S. Customs and Border Protection (''CBP'') shall assess, antidumping duties on all appropriate entries. If we proceed to a final rescission of the new shipper review, Sunbeauty's entries will be assessed at the rate entered.[13] If we do not proceed to a final rescission of the new shipper review, pursuant to 19 CFR 351.212(b)(1), we will calculate importer-specific assessment rates. We will instruct CBP to assess antidumping duties on all appropriate entries covered by this review if any importer-specific assessment rate calculated in the final results of this review is above *de minimis*.[14]

Cash Deposit Requirements

Effective upon publication of the final rescission or the final results of this new shipper review, we will instruct CBP to discontinue the option of posting a bond or security in lieu of a cash deposit for entries of subject merchandise by Sunbeauty. If the Department proceeds to a final rescission of the new shipper review, the cash deposit rate will continue to be the PRC-wide rate. If we issue final results of the new shipper review for Sunbeauty, we will instruct CBP to collect cash deposits, effective upon the publication of the final results, at the rates established therein.

Notification to Importers

This notice also serves as a preliminary reminder to importers of their responsibility under 19 CFR 351.402(f)(2) to file a certificate regarding the reimbursement of antidumping duties prior to liquidation of the relevant entries during this review period. Failure to comply with this requirement could result in the Department's presumption that reimbursement of antidumping duties occurred and the subsequent assessment of double antidumping duties,

The Department is issuing and publishing these results in accordance with sections 751(a)(2)(B) and 777(i)(l) of the Act, and 19 CFR 351.214 and 19 CFR 351.221(b)(4).

Dated: November 29, 2016.

Paul Piquado,

Assistant Secretary for Enforcement and Compliance.

[FR Doc. 2016–29230 Filed 12–5–16; 8:45 a.m.]

BILLING CODE 3510–DS–P

[9] *See* 19 CFR 351.309(c).

[10] *See* 19 CFR 351.309(d).

[11] *See* 19 CFR 351.310(c).

[12] *See* 19 CFR 351.310(d).

[13] *See* 19 CFR 351.212(c).

[14] *See* 19 CFR 351.106(c)(2).

DEPARTMENT OF COMMERCE

International Trade Administration

[A–557–816]

Certain Steel Nails From Malaysia: Preliminary Results of the Changed Circumstances Review

AGENCY: Enforcement and Compliance, International Trade Administration, Department of Commerce.

SUMMARY: On November 17, 2015, the Department of Commerce (the ''Department'') initiated a changed circumstance review (''CCR'') of the antidumping duty (''AD'') order on certain steel nails (''nails'') from Malaysia. Pursuant to section 751(b) of the Tariff Act of 1930, as amended (''the Act''), and 19 CFR 351.216, the Department preliminarily determines that Inmax Sdn. Bhd. (''Inmax Sdn'') and Inmax Industries Sdn. Bhd. (''Inmax Industries'') (collectively, ''Inmax'') should be collapsed and assigned the same AD cash deposit rate for purposes of determining AD liability in this proceeding. Interested parties are invited to comment on these preliminary results.

DATES: Effective December 6, 2016.

FOR FURTHER INFORMATION CONTACT: Moses Song, AD/CVD Operations, Office VI, Enforcement and Compliance, International Trade Administration, U.S. Department of Commerce, 1401 Constitution Avenue NW., Washington, DC 20230; telephone: (202) 482–5041.

SUPPLEMENTARY INFORMATION:

Background

On July 13, 2015, the Department published the AD order on nails from Malaysia in the **Federal Register**.[1] On September 2, 2015, Mid Continent Steel & Wire, Inc. (''Petitioner'') requested that the Department conduct a CCR, pursuant to section 751(b) of the Act and 19 CFR 351.216, to determine that Inmax Sdn and Inmax Industries should be collapsed and assigned the same AD cash deposit rate assigned to Inmax Sdn.[2] On November 17, 2015, the Department initiated this CCR, pursuant to section 751(b)(1) of the Act and 19 CFR 351.216(c) and (d), upon finding that there is sufficient information and ''good cause'' regarding new trading

[1] *See Certain Steel Nails From the Republic of Korea, Malaysia, the Sultanate of Oman, Taiwan, and the Socialist Republic of Vietnam: Antidumping Duty Orders,* 80 FR 39994 (July 13, 2015) (''*Order*'').

[2] *See* Letter from Petitioner to the Department, regarding ''Certain Steel Nails from Malaysia: Request for Changed Circumstances Review,'' dated September 2, 2015 (''CCR Request'').

patterns and possible evasion of the *Order*.[3]

Scope of the Order

The merchandise covered by the *Order* is certain steel nails having a nominal shaft length not exceeding 12 inches.[4] Certain steel nails include, but are not limited to, nails made from round wire and nails that are cut from flat-rolled steel. Merchandise covered by this order is currently classified in the Harmonized Tariff System of the United States (''HTSUS'') under subheadings 7317.00.55.02, 7317.00.55.03, 7317.00.55.05, 7317.00.55.07, 7317.00.55.08, 7317.00.55.11, 7317.00.55.18, 7317.00.55.19, 7317.00.55.20, 7317.00.55.30, 7317.00.55.40, 7317.00.55.50, 7317.00.55.60, 7317.00.55.70, 7317.00.55.80, 7317.00.55.90, 7317.00.65.30, 7317.00.65.60 and 7317.00.75.00. These HTSUS subheadings are provided for convenience and customs purposes; the written description of the scope of this order is dispositive.

A complete description of the scope of the *Order* is contained in the Preliminary Decision Memorandum.[5] The Preliminary Decision Memorandum is a public document and is on file electronically via Enforcement and Compliance's Antidumping and Countervailing Duty Centralized Electronic Service System (''ACCESS''). ACCESS is available to registered users at *http://access.trade.gov,* and is available to all parties in the Central Records Unit, Room B8024 of the main Department of Commerce building. In addition, a complete version of the Preliminary Decision Memorandum can be accessed directly at *http://enforcement.trade.gov/frn/index.html.* The signed Preliminary Decision Memorandum and the electronic version of the Preliminary Decision Memorandum are identical in content.

Methodology

We are conducting this CCR in accordance with section 751(b)(1) of the Act. For a full description of the methodology underlying our conclusions, *see* the Preliminary Decision Memorandum.

Preliminary Results of the Changed Circumstances Review

We preliminarily determine that Inmax Sdn and Inmax Industries are affiliated and should be collapsed as a single entity. Specifically, we find that Inmax Sdn and Inmax Industries are directly controlled by Inmax Holding Co., Ltd. (Inmax Holding) as Inmax Sdn and Inmax Industries are both wholly-owned by Inmax Holding, thereby meeting the affiliation criteria in accordance with section 777(33)(F) of the Act. In addition, we find that Inmax Sdn and Inmax Industries should be collapsed because both producers have production facilities for similar or identical products that would not require substantial retooling in order to restructure manufacturing priorities.

Additionally, there is a significant potential for the manipulation of price or production. Regarding a significant potential for the manipulation of price or production, the following criteria are all satisfied: (1) A high level of common ownership; (2) managerial overlap; and (3) intertwined operations. In particular, U.S. Customs and Border Protection (CBP) import data for entries of merchandise under review from the publication date of the preliminary determination of the investigation (*i.e.,* December 29, 2014) to March 31, 2016 (*i.e.,* subsequent to the initiation of this CCR), clearly indicate new trading patterns since the *Order* was issued in July 2015, which has the potential to undermine the efficacy and integrity of the *Order.* Furthermore, we note that the collapsing issue was not thoroughly addressed in the final determination of the investigation and that, based on record evidence, there is a significant potential for future manipulation of price or production of subject merchandise between Inmax Sdn and Inmax Industries. A list of topics discussed in the Preliminary Decision Memorandum appears in the Appendix to this notice.

If the Department upholds these preliminary results in the final results, entries of subject merchandise produced by Inmax Sdn and Inmax Industries will be subject to the AD cash deposit rate currently assigned to Inmax Sdn (*i.e.,* 39.35 percent).[6]

Public Comment

Interested parties may submit case briefs no later than 30 days after the date of publication of these preliminary results of review in the **Federal Register**.[7] Rebuttal briefs, limited to issues raised in the case briefs, may be filed by no later than five days after the deadline for filing case briefs.[8] Parties that submit case or rebuttal briefs are encouraged to submit with each argument: (1) A statement of the issue; (2) a brief summary of the argument; and (3) a table of authorities.[9] All briefs are to be filed electronically using ACCESS.[10] An electronically filed document must be received successfully in its entirety by ACCESS by 5:00 p.m. Eastern Time on the day on which it is due.[11]

Any interested party may submit a request for a hearing to the Assistant Secretary of Enforcement and Compliance using ACCESS within 30 days of publication of this notice in the **Federal Register**.[12] Hearing requests should contain the following information: (1) The party's name, address, and telephone number; (2) the number of participants; and (3) a list of the issues to be discussed. Oral presentations will be limited to issues raised in the briefs.[13] If a request for a hearing is made, parties will be notified of the time and date of the hearing, which will be held at the U.S. Department of Commerce, 1401 Constitution Avenue NW., Washington, DC 20230.[14]

Final Results of the Review

Unless extended, in accordance with 19 CFR 351.216(e), the Department intends to issue the final results of this CCR not later than 270 days after the date on which the review was initiated.

Notification to Parties

The Department is issuing and publishing these results in accordance with sections 751(b)(1) and 777(i) of the Act and 19 CFR 351.216 and 351.221(c)(3)(i).

[3] *See Certain Steel Nails From Malaysia: Initiation of Antidumping Duty Changed Circumstances Review,* 80 FR 71772 (November 17, 2015) (''*Initiation Notice*'').

[4] The shaft length of certain steel nails with flat heads or parallel shoulders under the head shall be measured from under the head or shoulder to the tip of the point. The shaft length of all other certain steel nails shall be measured overall.

[5] *See* Memorandum to Christian Marsh, Deputy Assistant Secretary for Antidumping and Countervailing Duty Operations, from Moses Song, International Trade Compliance Analyst, Office VI, through Scot Fullerton, Director, Office VI, regarding ''Decision Memorandum for the Preliminary Results of the Antidumping Duty Changed Circumstances Review of Certain Steel Nails from Malaysia,'' dated concurrently with and hereby adopted in this notice.

[6] *See Certain Steel Nails From Malaysia; Final Determination of Sales at Less Than Fair Value,* 80 FR 28969 (May 20, 2015).

[7] *See* 19 CFR 351.309(c)(1)(ii). The Department has exercised its discretion under 19 CFR 351.309(c)(1)(ii) to alter the time limit for submission of case briefs.

[8] *See* 19 CFR 351.309(d)(1).

[9] *See* 19 CFR 351.309(c)(2) and (d)(2).

[10] *See* 19 CFR 351.303(b) and (f).

[11] *See* 19 CFR 351.303(b).

[12] *See* 19 CFR 351.310(c).

[13] *Id.*

[14] *See* 19 CFR 351.310(d).

Dated: November 16, 2016.

Paul Piquado,

Assistant Secretary, for Enforcement and Compliance.

Appendix

List of Topics Discussed in the Preliminary Decision Memorandum

I. Summary
II. Background
III. Scope of the Order
IV. Preliminary Results of the Changed Circumstances Review
A. Affiliation
Legal Standard
Analysis
Recommendation
B. Collapsing
Legal Standard
Analysis
1. Affiliation
2. Substantial Retooling of Manufacturing Facilities
3. Significant Potential for Manipulation of Price or Production
i. Level of Common Ownership
ii. Managerial Overlap
iii. Intertwined Operations
C. Whether the Department Should Collapse Affiliated Parties After the Final Determination of an Investigation and Prior to the First Administrative Review Recommendation

[FR Doc. 2016–29196 Filed 12–5–16; 8:45 am]

BILLING CODE 3510–DS–P

DEPARTMENT OF COMMERCE

National Oceanic and Atmospheric Administration

RIN 0648–XF057

Marine Fisheries Advisory Committee; Correction

AGENCY: National Marine Fisheries Service (NMFS), National Oceanic and Atmospheric Administration (NOAA), Commerce.

ACTION: Notice of open public meetings; correction.

SUMMARY: This notice corrects the **SUMMARY** section to a notice published on November 25, 2016, which contained incorrect information about what will be discussed at the forthcoming meeting of the Marine Fisheries Advisory Committee (MAFAC). This correction sets out the **SUMMARY** in full to make it clear that the members will discuss and finalize recommendations on issues and priorities that should be addressed by the incoming Administration.

DATES: The meeting is scheduled for December 14, 2016, 2–4 p.m., Eastern Standard Time.

ADDRESSES: Public access is available at 1315 East-West Highway, Silver Spring, MD 20910.

FOR FURTHER INFORMATION CONTACT: Any member of the public wishing to participate may contact Heidi Lovett, (301) 427–8034; email: *heidi.lovett@noaa.gov.*

SUPPLEMENTARY INFORMATION:

Need for Correction

In a notice NMFS published on November 25, 2016, on page 85208, in the third column, revise the **SUMMARY** in its entirety to read as follows:

''This notice sets forth the schedule and proposed agenda of a forthcoming meeting of the Marine Fisheries Advisory Committee (MAFAC). The members will discuss and finalize recommendations on issues and priorities that should be addressed by the incoming Administration.''

Background

The MAFAC was established by the Secretary of Commerce (Secretary), and, since 1971, advises the Secretary on all living marine resource matters that are the responsibility of the Department of Commerce. The charter and other information are located online at *http://www.nmfs.noaa.gov/ocs/mafac/.*

Matters To Be Considered

The Committee is convening to discuss and finalize their recommendations on fisheries and living marine resource issues and priorities that should be addressed by the incoming Administration. Other administrative matters may be considered. This date, time, and agenda are subject to change.

Time and Date

The meeting is scheduled for December 14, 2016, 2–4 p.m., Eastern Standard Time by conference call. Conference call information for the public will be posted at *http://www.nmfs.noaa.gov/ocs/mafac/* by December 7, 2016.

Special Accommodations

These meetings are physically accessible to people with disabilities. Requests for sign language interpretation or other auxiliary aids should be directed to Heidi Lovett, 301–427–8034 by December 7, 2016.

Dated: December 1, 2016.

Jennifer Lukens,

Director for the Office of Policy, National Marine Fisheries Service.

[FR Doc. 2016–29248 Filed 12–5–16; 8:45 am]

BILLING CODE 3510–22–P

DEPARTMENT OF COMMERCE

National Oceanic and Atmospheric Administration

Submission for OMB Review; Comment Request

The Department of Commerce will submit to the Office of Management and Budget (OMB) for clearance the following proposal for collection of information under the provisions of the Paperwork Reduction Act (44 U.S.C. Chapter 35).

Agency: National Oceanic and Atmospheric Administration (NOAA).

Title: West Coast Region Pacific Coast Groundfish Fishery: Trawl Rationalization Cost Recovery Program.

OMB Control Number: 0648–0663.

Form Number(s): None.

Type of Request: Regular (extension of a currently approved information collection).

Number of Respondents: 176.

Average Hours per Response: Cost recovery and annual reporting forms, 1 hour; failure to pay reports, 4 hours.

Burden Hours: 1,898.

Needs and Uses: This request is for an extension of a currently approved information collection.

The Magnuson-Stevens Fishery Conservation and Management Act requires that the Secretary of Commerce maintain a cost recovery program to cover part of the management, data collection, and enforcement costs of the limited access privilege programs, such as the Pacific coast groundfish fishery's trawl rationalization program. This cost recovery program requires fish sellers to submit fees to fish buyers who then submit those fees to the National Marine Fisheries Service (NMFS) and include information about the volume and value of groundfish. Information is collected from monthly and annual reports as well as non-payment documents when necessary.

This program is authorized under the Pacific coast groundfish fishery regulations, trawl rationalization cost recovery program at 50 CFR 660.115.

Affected Public: Business or other for-profit organizations.

Frequency: Monthly and annually.

Respondent's Obligation: Mandatory.

This information collection request may be viewed at reginfo.gov. Follow the instructions to view Department of Commerce collections currently under review by OMB.

Written comments and recommendations for the proposed information collection should be sent within 30 days of publication of this notice to *OIRA_Submission@omb.eop.gov* or fax to (202) 395–5806.

Dated: November 30, 2016.

Sarah Brabson,

NOAA PRA Clearance Officer.

[FR Doc. 2016–29233 Filed 12–5–16; 8:45 am]

BILLING CODE 3510–22–P

COMMODITY FUTURES TRADING COMMISSION

Sunshine Act Meetings

TIME AND DATE: 10:00 a.m., Tuesday, December 13, 2016.

PLACE: Three Lafayette Centre, 1155 21st Street NW., Washington, DC, 9th Floor Commission Conference Room.

STATUS: Closed.

MATTERS TO BE CONSIDERED: Surveillance, enforcement, and examinations matters. In the event that the time, date, or location of this meeting changes, an announcement of the change, along with the new time, date, and/or place of the meeting will be posted on the Commission's Web site at *http://www.cftc.gov.*

CONTACT PERSON FOR MORE INFORMATION: Christopher Kirkpatrick, 202–418–5964.

Natise Allen,

Executive Assistant.

[FR Doc. 2016–29372 Filed 12–2–16; 4:15 pm]

BILLING CODE 6351–01–P

DEPARTMENT OF DEFENSE

Office of the Secretary

Uniform Formulary Beneficiary Advisory Panel; Notice of Federal Advisory Committee Meeting

AGENCY: Assistant Secretary of Defense (Health Affairs), DoD.

ACTION: Notice of meeting.

SUMMARY: The Department of Defense is publishing this notice to announce a Federal Advisory Committee meeting of the Uniform Formulary Beneficiary Advisory Panel (hereafter referred to as the Panel).

DATES: Thursday, January 5, 2017, from 9:00 a.m. to 12:00 p.m.

ADDRESSES: Naval Heritage Center Theater, 701 Pennsylvania Avenue NW., Washington, DC 20004.

FOR FURTHER INFORMATION CONTACT: CAPT Edward Norton, DFO, Uniform Formulary Beneficiary Advisory Panel, 7700 Arlington Boulevard, Suite 5101, Falls Church, VA 22042–5101. Telephone: (703) 681–2890. Fax: (703) 681–1940. Email Address: *dha.ncr.health-it.mbx.baprequests@mail.mil.*

SUPPLEMENTARY INFORMATION: This meeting is being held under the provisions of the Federal Advisory Committee Act of 1972 (Title 5, United States Code (U.S.C.), Appendix, as amended) and the Government in the Sunshine Act of 1976 (5 U.S.C. 552b, as amended).

Purpose of Meeting: The Panel will review and comment on recommendations made to the Director of Defense Health Agency, by the Pharmacy and Therapeutics Committee, regarding the Uniform Formulary.

Meeting Agenda

1. Sign-In
2. Welcome and Opening Remarks
3. Public Citizen Comments
4. Scheduled Therapeutic Class Reviews (Comments will follow each agenda item)
   a. Antilipidemics-1: Proprotein Convertase Subtilisin/Kexin type 9 (PCSK9) Inhibitors
   b. Anticoagulants: Oral Anticoagulants
5. Newly Approved Drugs
6. Pertinent Utilization Management Issues
7. Panel Discussions and Vote

Meeting Accessibility: Pursuant to 5 U.S.C. 552b, as amended, and 41 Code of Federal Regulations (CFR) 102–3.140 through 102–3.165, and the availability of space, this meeting is open to the public. Seating is limited and will be provided only to the first 220 people signing-in. All persons must sign-in legibly.

Administrative Work Meeting: Prior to the public meeting, the Panel will conduct an Administrative Work Meeting from 7:30 a.m. to 9:00 a.m. to discuss administrative matters of the Panel. The Administrative Work Meeting will be held at the Naval Heritage Center, 701 Pennsylvania Avenue NW., Washington, DC 20004. Pursuant to 41 CFR 102–3.160, the Administrative Work Meeting will be closed to the public.

Written Statements: Pursuant to 41 CFR 102–3.140, the public or interested organizations may submit written statements to the membership of the Panel at any time or in response to the stated agenda of a planned meeting. Written statements should be submitted to the Panel's Designated Federal Officer (DFO). The DFO's contact information can be obtained from the General Services Administration's Federal Advisory Committee Act Database at *http://facadatabase.gov/.* Written statements that do not pertain to the scheduled meeting of the Panel may be submitted at any time. However, if individual comments pertain to a specific topic being discussed at a planned meeting, then these statements must be submitted no later than 5 business days prior to the meeting in question. The DFO will review all submitted written statements and provide copies to all the committee members.

Public Comments: In addition to written statements, the Panel will set aside 1 hour for individuals or interested groups to address the Panel. To ensure consideration of their comments, individuals and interested groups should submit written statements as outlined in this notice; but if they still want to address the Panel, then they will be afforded the opportunity to register to address the Panel. The Panel's DFO will have a ''Sign-Up Roster'' available at the Panel meeting for registration on a first-come, first-serve basis. Those wishing to address the Panel will be given no more than 5 minutes to present their comments, and at the end of the 1-hour time period, no further public comments will be accepted. Anyone who signs-up to address the Panel, but is unable to do so due to the time limitation, may submit their comments in writing; however, they must understand that their written comments may not be reviewed prior to the Panel's deliberation.

To ensure timeliness of comments for the official record, the Panel encourages that individuals and interested groups consider submitting written statements instead of addressing the Panel.

Dated: December 1, 2016.

Aaron Siegel,

Alternate OSD Federal Register Liaison Officer, Department of Defense.

[FR Doc. 2016–29204 Filed 12–5–16; 8:45 am]

BILLING CODE 5001–06–P

DEPARTMENT OF EDUCATION

[Docket No. ED–2016–ICCD–0133]

Agency Information Collection Activities; Submission to the Office of Management and Budget for Review and Approval; Comment Request; Developing Hispanic-Serving Institutions Program Application

AGENCY: Department of Education (ED), Office of Postsecondary Education (OPE).

ACTION: Notice.

SUMMARY: In accordance with the Paperwork Reduction Act of 1995 (44 U.S.C. chapter 3501 *et seq.*), ED is proposing an extension of an existing information collection.

DATES: Interested persons are invited to submit comments on or before January 5, 2017.

ADDRESSES: To access and review all the documents related to the information collection listed in this notice, please use *http://www.regulations.gov* by searching the Docket ID number ED–2016–ICCD–0133. Comments submitted in response to this notice should be submitted electronically through the Federal eRulemaking Portal at *http://www.regulations.gov* by selecting the Docket ID number or via postal mail, commercial delivery, or hand delivery. *Please note that comments submitted by fax or email and those submitted after the comment period will not be accepted.* Written requests for information or comments submitted by postal mail or delivery should be addressed to the Director of the Information Collection Clearance Division, U.S. Department of Education, 400 Maryland Avenue SW., LBJ, Room 2E–347, Washington, DC 20202–4537.

FOR FURTHER INFORMATION CONTACT: For specific questions related to collection activities, please contact Njeri Clark, 202–453–6224.

SUPPLEMENTARY INFORMATION: The Department of Education (ED), in accordance with the Paperwork Reduction Act of 1995 (PRA) (44 U.S.C. 3506(c)(2)(A)), provides the general public and Federal agencies with an opportunity to comment on proposed, revised, and continuing collections of information. This helps the Department assess the impact of its information collection requirements and minimize the public's reporting burden. It also helps the public understand the Department's information collection requirements and provide the requested data in the desired format. ED is soliciting comments on the proposed information collection request (ICR) that is described below. The Department of Education is especially interested in public comment addressing the following issues: (1) Is this collection necessary to the proper functions of the Department; (2) will this information be processed and used in a timely manner; (3) is the estimate of burden accurate; (4) how might the Department enhance the quality, utility, and clarity of the information to be collected; and (5) how might the Department minimize the burden of this collection on the respondents, including through the use of information technology. Please note that written comments received in response to this notice will be considered public records.

Title of Collection: Developing Hispanic-Serving Institutions Program Application.

OMB Control Number: 1840–0745.

Type of Review: An extension of an existing information collection.

Respondents/Affected Public: Private Sector.

Total Estimated Number of Annual Responses: 250.

Total Estimated Number of Annual Burden Hours: 13,750.

Abstract: Collection of the information is necessary in order for the Secretary of Education to carry out the Developing Hispanic-Serving Institutions Program under Title V, Part A, Section 501 of the Higher Education Act of 1965, as amended, 20 U.S.C. 1101–1101d; 1103–1103g. The information will be used in the evaluation process to determine whether proposed activities are consistent with legislated activities and to determine the dollar share of the Congressional appropriation to be awarded to successful applicants. The Developing Hispanic-Serving Institutions Program provides grants to: (1) Expand educational opportunities for, and improve the academic attainment of, Hispanic students; and (2) expand and enhance academic offerings, program quality, faculty quality, and institutional stability of colleges and universities that are educating the majority of Hispanic college students and help large numbers of Hispanic and low-income students complete postsecondary degrees.

Dated: December 1, 2016.

Kate Mullan,

Acting Director, Information Collection Clearance Division, Office of the Chief Privacy Officer, Office of Management.

[FR Doc. 2016–29164 Filed 12–5–16; 8:45 am]

BILLING CODE 4000–01–P

DEPARTMENT OF EDUCATION

[Docket No. ED–2016–ICCD–0106]

Agency Information Collection Activities; Submission to the Office of Management and Budget for Review and Approval; Comment Request; Targeted Teacher Shortage Areas

AGENCY: Department of Education (ED), Office of Postsecondary Education (OPE).

ACTION: Notice.

SUMMARY: In accordance with the Paperwork Reduction Act of 1995 (44 U.S.C. chapter 3501 *et seq.*), ED is proposing a revision of an existing information collection.

DATES: Interested persons are invited to submit comments on or before January 5, 2017.

ADDRESSES: To access and review all the documents related to the information collection listed in this notice, please use *http://www.regulations.gov* by searching the Docket ID number ED–2016–ICCD–0106. Comments submitted in response to this notice should be submitted electronically through the Federal eRulemaking Portal at *http://www.regulations.gov* by selecting the Docket ID number or via postal mail, commercial delivery, or hand delivery. *Please note that comments submitted by fax or email and those submitted after the comment period will not be accepted.* Written requests for information or comments submitted by postal mail or delivery should be addressed to the Director of the Information Collection Clearance Division, U.S. Department of Education, 400 Maryland Avenue SW., LBJ, Room 2E–347, Washington, DC 20202–4537.

FOR FURTHER INFORMATION CONTACT: For specific questions related to collection activities, please contact Freddie Cross, 202–453–7224.

SUPPLEMENTARY INFORMATION: The Department of Education (ED), in accordance with the Paperwork Reduction Act of 1995 (PRA) (44 U.S.C. 3506(c)(2)(A)), provides the general public and Federal agencies with an opportunity to comment on proposed, revised, and continuing collections of information. This helps the Department assess the impact of its information collection requirements and minimize the public's reporting burden. It also helps the public understand the Department's information collection requirements and provide the requested data in the desired format. ED is soliciting comments on the proposed information collection request (ICR) that is described below. The Department of Education is especially interested in public comment addressing the following issues: (1) Is this collection necessary to the proper functions of the Department; (2) will this information be processed and used in a timely manner; (3) is the estimate of burden accurate; (4) how might the Department enhance the quality, utility, and clarity of the information to be collected; and (5) how might the Department minimize the burden of this collection on the respondents, including through the use of information technology. Please note that written comments received in response to this notice will be considered public records.

Title of Collection: Targeted Teacher Shortage Areas.

OMB Control Number: 1840–0595.

Type of Review: A revision of an existing information collection.

Respondents/Affected Public: State, Local, and Tribal Governments.

Total Estimated Number of Annual Responses: 57.

Total Estimated Number of Annual Burden Hours: 4,275.

Abstract: This request is for approval of reporting requirements that are contained in the Federal Family Education Loan Program regulations which address the targeted teacher deferment provision of the Higher Education Act of 1965, as amended. The information collected is necessary for a state to support it's annual request for designation of teacher shortage areas within the state. In previous years, the data collection was conducted by paper and pencil, mail-in method. Beginning with the 2017 collection, data collection will be conducted completely online thus reducing burden to the respondents.

Dated: December 1, 2016.

Kate Mullan,

Acting Director, Information Collection Clearance Division, Office of the Chief Privacy Officer, Office of Management.

[FR Doc. 2016–29167 Filed 12–5–16; 8:45 am]

BILLING CODE 4000–01–P

DEPARTMENT OF ENERGY

Record of Decision for the Recapitalization of Infrastructure Supporting Naval Spent Nuclear Fuel Handling at the Idaho National Laboratory

AGENCY: Department of Energy.

ACTION: Record of Decision.

SUMMARY: The U.S. Department of Energy (DOE) Naval Nuclear Propulsion Program (NNPP) is issuing this Record of Decision (ROD) for the recapitalization of infrastructure supporting naval spent nuclear fuel handling at the Idaho National Laboratory (INL) at the Naval Reactors Facility (NRF) based on information and analyses contained in the *Final Environmental Impact Statement for the Recapitalization of Infrastructure Supporting Naval Spent Nuclear Fuel Handling at the Idaho National Laboratory* (DOE/EIS–0453–F) issued on September 23, 2016. The NNPP will recapitalize the infrastructure supporting naval spent nuclear fuel handling at the INL by constructing a new facility in the northeast section of the NRF site (*i.e.,* Location 3/4). In making this decision, the NNPP considered potential environmental impacts of the alternatives, impacts upon the NNPP support of naval spent fuel handling until at least 2060, availability of resources, and public comments on the Draft and Final Environmental Impact Statements (EISs), DOE/EIS–0453–D and DOE/EIS–0453–F.

FOR FURTHER INFORMATION CONTACT: For further information about this ROD, contact Mr. Erik Anderson, Department of Navy, Naval Sea Systems Command, 1240 Isaac Hull Avenue SE., Stop 8036, Washington Navy Yard, DC 20376–8036.

For information regarding the DOE NEPA process, contact Ms. Carol M. Borgstrom, Director, Office of NEPA Policy and Compliance (GC–54), U.S. Department of Energy, 1000 Independence Avenue SW., Washington, DC 20585.

The Draft and Final EIS are available at *www.ecfrecapitalization.us* and on the DOE NEPA Web site at *http://energy.gov/nepa.*

SUPPLEMENTARY INFORMATION: The NNPP prepared this ROD in accordance with the National Environmental Policy Act of 1969 (NEPA), as amended (42 U.S.C. 4321 *et seq.*), the Council on Environmental Quality (CEQ) regulations for implementing the procedural provisions of NEPA (40 CFR parts 1500–1508), and the DOE NEPA implementing procedures (10 CFR part 1021). The NNPP is committed to managing naval spent nuclear fuel in a manner that is consistent with the *Department of Energy (DOE) Programmatic Spent Nuclear Fuel Management and Idaho National Engineering Laboratory Environmental Restoration and Waste Management Programs Final Environmental Impact Statement* (DOE/EIS–0203–F), and to complying with the Settlement Agreement, as amended in 2008, among the State of Idaho, the DOE, and the Navy concerning the management of naval spent nuclear fuel. Consistent with the ROD for DOE/EIS–0203–F, naval spent nuclear fuel is shipped by rail from shipyards and prototype facilities to the INL for processing. To allow the NNPP to continue to unload, transfer, prepare, and package naval spent nuclear fuel for disposal, three alternatives were evaluated in the Draft and Final EIS: No Action Alternative, Overhaul Alternative, and New Facility Alternative. The impacts to human health and the environment for all the alternatives would primarily be small; however, there would be impacts to naval spent fuel handling from the No Action and Overhaul Alternatives; therefore, the NNPP selected the preferred alternative (New Facility Alternative) at Location 3/4 since a new facility will improve long-term capacity, increase efficiency and effectiveness, reduce long-term costs and risks, and best support the ability of the NNPP to comply with the Settlement Agreement, as amended in 2008.

Background

The mission of the NNPP, also known as the Naval Reactors Program, is to provide the U.S. with safe, effective, and affordable naval nuclear propulsion plants and to ensure their continued safe and reliable operation through lifetime support, research and development, design, construction, specification, certification, testing, maintenance, and disposal. A crucial component of this mission, naval spent nuclear fuel handling, occurs at the end of a nuclear propulsion system's useful life or when naval nuclear fuel has been depleted. The NNPP is responsible for removal of the naval spent nuclear fuel through a defueling or refueling operation. Both operations remove the naval spent nuclear fuel from the reactor, but a refueling operation also involves installing new fuel, allowing the nuclear-powered ship to be redeployed into the U.S. Navy fleet. Once the naval spent nuclear fuel has been removed from an aircraft carrier, submarine, or prototype, the spent fuel is sent to NRF for examination and further naval spent nuclear fuel handling including transferring, preparing, and packaging for transfer to an interim storage facility or geologic repository.

The NNPP ensures that naval spent nuclear fuel handling is performed in a safe and environmentally responsible manner in accordance with 50 U.S.C. 2406 and 2511 (codifying Executive Order 12344).

Alternatives

Consistent with the ROD for DOE/EIS–0203–F, naval spent nuclear fuel will continue to be shipped by rail from shipyards and prototypes to NRF for processing. To allow the NNPP to continue to unload, transfer, prepare, and package naval spent nuclear fuel for disposal, three alternatives were identified and analyzed in the Draft and Final EIS.

1. No Action Alternative

The No Action Alternative involves maintaining the Expended Core Facility (ECF) without a change to the present course of action or management of the facility. The current naval spent nuclear fuel handling infrastructure would continue to be used while the NNPP performs only preventative and corrective maintenance. The No Action Alternative does not meet the purpose for the proposed action because it would not provide the infrastructure

necessary to support the naval nuclear reactor defueling and refueling schedules required to meet the operational needs of the U.S. Navy. The No Action Alternative does not meet the NNPP's need because significant upgrades are necessary to the ECF infrastructure to continue safe and environmentally responsible naval spent nuclear fuel handling until at least 2060. As currently configured, the ECF infrastructure cannot support use of the new M–290 shipping containers. Significant changes in configuration of the facility and spent fuel handling processing locations in the water pool would be required to support unloading fuel from the new M–290 shipping containers. In addition, over the next 45 years, preventative and corrective maintenance without significant upgrades and refurbishments may not be sufficient to sustain the proper functioning of ECF structures, systems, and components. Upgrades and refurbishments needed to support use of the new M–290 shipping containers and continue safe and environmentally responsible operations would not meet the definition of the No Action Alternative; therefore, these actions are represented by the Overhaul Alternative.

The implementation of the No Action Alternative (*i.e.,* failure to perform upgrades and refurbishments), in combination with the NNPP commitment to only operate in a safe and environmentally responsible manner, may result in ECF eventually being unavailable for handling naval spent nuclear fuel. If the NNPP naval spent nuclear fuel handling infrastructure were to become unavailable, the inability to transfer, prepare, and package naval spent nuclear fuel could immediately and profoundly impact the NNPP's mission and national security needs to refuel and defuel nuclear-powered submarines and aircraft carriers. In addition, the U.S. Navy could not ensure its ability to meet the requirements of the Settlement Agreement and its 2008 Addendum.

Since the No Action Alternative does not meet the purpose and need for the proposed action, it is considered to be an unreasonable alternative; however, the No Action Alternative was included in the Draft and Final EIS as required by CEQ regulations.

2. Overhaul Alternative

The Overhaul Alternative involves continuing to use the aging infrastructure at ECF, while incurring increasing costs to provide the required refurbishments and workaround actions necessary to ensure uninterrupted aircraft carrier and submarine refuelings and defuelings. Under the Overhaul Alternative, the NNPP would operate ECF in a safe and environmentally responsible manner by continuing to maintain ECF while implementing major refurbishment projects for the ECF infrastructure and water pools. This would entail:

- Short-term actions necessary to keep the infrastructure in safe working order, including regular upkeep and actions sufficient to sustain the proper functioning of structures, systems, and components (*e.g.,* the ongoing work currently performed in ECF to inspect and repair deteriorating water pool concrete coatings).
- Facility, process, and equipment reconfigurations needed for specific capabilities required in the future. These actions involve installation of new equipment and processes, and relocation of existing equipment and processes, within the current facility to provide a new capability (*e.g.,* modification of ECF and reconfiguration of the water pool as necessary to handle M–290 shipping containers).
- Major refurbishment actions necessary to sustain the life of the infrastructure (*e.g.,* to the extent practicable, overhaul the water pools to bring them up to current design and construction standards).

Refurbishment activities would take place in parallel with ECF operations for the majority of the Overhaul Alternative time period. The first 33 years of the 45 years (*i.e.,* the refurbishment period) would include refurbishment and operations activities being conducted in parallel. During certain refurbishment phases, operations could be limited due to the nature of the refurbishment activities (*e.g.,* operations would not continue in water pools that are under repair). There would then be a 12-year period where only operational activities would take place in ECF (*i.e.,* the post-refurbishment operational period).

Failure to implement this overhaul in advance of infrastructure deterioration would impact the ability of ECF to operate for several years. Further, overhaul actions would necessitate operational interruptions for extended periods of time.

3. New Facility Alternative

A New Facility Alternative would acquire capital assets to recapitalize naval spent nuclear fuel handling capabilities. While a new facility requires new process and infrastructure assets, the design could leverage use of the newer, existing ECF support facilities and would leverage use of newer equipment designs. The facility would be designed with the flexibility to integrate future identified mission needs.

Under the current budget and funding levels for the New Facility Alternative, it is anticipated that construction activities would occur over approximately a 5-year period.

Construction of the New Facility Alternative would occur in parallel with ECF operations. An approximately 2-year period would follow the construction of the New Facility Alternative when new equipment would be installed and tested, and training would be provided to qualify the operations workforce.

A new facility would include all current naval spent nuclear fuel handling operations conducted at ECF. In addition, it would include the capability to unload naval spent nuclear fuel from M–290 shipping containers in the water pool and handle aircraft carrier naval spent nuclear fuel assemblies without prior disassembly for preparation and packaging for disposal. Such capability does not currently exist within the ECF water pools, mainly due to insufficient available footprint in areas of the water pool with the required depth of water.

The NNPP would continue to operate ECF during new facility construction, during a transition period, and after the new facility is operational for examination work. To keep the ECF infrastructure in a safe working order during these time periods, some limited upgrades and refurbishments may be necessary. Details are not currently available regarding which specific actions will be taken; therefore, they are not explicitly analyzed as part of the New Facility Alternative. The environmental impacts from these upgrades and refurbishments are considered to be bounded by the environmental impacts described in the Refurbishment Period of the Overhaul Alternative.

Environmental Impacts of Alternatives

With the following exceptions, there are no environmental impacts associated with any of the alternatives, or the impacts are negligible or small:

- For the No Action Alternative, there would be large and profound impacts to naval spent nuclear fuel management and national security needs.
  - While ECF operations continue, management of M–290 shipping containers and work stoppages would affect fleet performance and the ability to manage naval spent nuclear fuel in accordance with the Settlement Agreement and its 2008 Addendum.

○ If ECF operations cease, the NNPP would eventually be unable to defuel and refuel submarines, leading to the inability of the nuclear-powered ships or their nuclear-trained naval personnel to be deployed or redeployed into fleet operations. Additionally, the NNPP would be unable to meet the requirements of the Settlement Agreement and its 2008 Addendum.

- For the refurbishment period of the Overhaul Alternative, there would be moderate impacts on naval spent nuclear fuel management from temporary work stoppages; however, the facility would be operated to minimize the impact on the NNPP's ability to meet its mission.
- For the New Facility Alternative, there would be beneficial impacts on naval spent nuclear fuel management once the new facility is fully operational because of increased process efficiencies.
- For the No Action Alternative, the refurbishment period of the Overhaul Alternative, and the construction and transition period of the New Facility Alternative, the impact from seismic hazards to ECF, without additional refurbishment or upgrades, would be moderate from the continued degradation of the facility over time.
- For the New Facility Alternative, electrical energy consumption impacts would be moderate in the transition period and the new facility operational period.

Environmentally Preferable Alternative

The impacts to human health and the environment from all the alternatives would primarily be small. The New Facility Alternative would involve the largest amount of ground surface disturbance but would provide the lowest risk from seismic hazards. Conversely, the No Action Alternative would involve no new ground disturbance but would pose a higher risk from seismic hazards. The Overhaul Alternative would involve some ground disturbance and a risk from seismic hazards that falls between the other two alternatives. Because the impacts to human health and the environment for all the alternatives would primarily be small, all alternatives are considered to be comparable and indistinguishable under CEQ regulations; therefore, the NNPP concludes that there is no environmentally preferred alternative.

Public Involvement

On July 20, 2010 the NNPP published a Notice of Intent (NOI) in the **Federal Register** (75 FR 42082) to prepare an EIS for the recapitalization of infrastructure supporting naval spent nuclear fuel handling and examination on the INL. Due to fiscal constraints on the DOE budget, project schedules changed such that the evaluation of the recapitalization of naval spent nuclear fuel handling capabilities progressed further than evaluations for examination recapitalization. As a result, an amended NOI was published on May 10, 2012 (77 FR 27448) to announce the NNPP's reduction in the scope of the EIS to include only the recapitalization of naval spent nuclear fuel handling capabilities.

On June 19, 2015 the NNPP published in the **Federal Register** (80 FR 35331) a Notice of Availability (NOA) of the Draft EIS; the duration of public comment period through August 10, 2015; the location and timing for three public hearings; and the various methods that could be used for submitting comments on the Draft EIS. In response to a request from the Shoshone-Bannock tribes, on August 14, 2015 the NNPP published a notice that it was reopening the public comment through August 31, 2015 (80 FR 48850).

The NNPP considered all comments received in preparing the Final EIS. On September 30, 2016 the NOA for the Final EIS was published in the **Federal Register** (81 FR 67338).

Decision

The NNPP will recapitalize the infrastructure supporting naval spent nuclear fuel handling at the INL by constructing a new facility in the northeast section of the NRF site (*i.e.,* Location 3/4). This decision will include recapitalization of the naval spent nuclear fuel handling capabilities described in the EIS including: Unloading M–140 and M–290 shipping containers; temporary wet storage of naval spent nuclear fuel; initial examination of naval spent nuclear fuel; resizing and securing nuclear poison in naval spent nuclear fuel modules; transfer of naval spent nuclear fuel for more detailed examination at the examination location; loading naval spent nuclear fuel into naval spent nuclear fuel canisters; transfer of naval spent nuclear fuel into or out of temporary dry storage; and loading waste shipping containers.

As described in the EIS, the recapitalization of ECF infrastructure supporting the preparation and examination of irradiated fuel and material specimens and the destructive examination of naval spent nuclear fuel will be the subject of separate evaluation under NEPA. No decision is being made at this time regarding the recapitalization of ECF infrastructure for examinations. Therefore, in addition to building a new facility, the NNPP will continue to perform limited upgrades as necessary to keep the ECF infrastructure in safe working order.

Basis for the Decision

The impacts to human health and the environment from the Overhaul Alternative and New Facility Alternative would primarily be small. Recapitalizing the infrastructure and processes for naval spent nuclear fuel handling by building a new facility will improve long-term capacity, increase efficiency and effectiveness, and reduce long-term costs and risks. The new facility will improve the ability of the NNPP to meet long-term mission needs and anticipated future production capabilities and enhance the ability of the NNPP to meet the 1995 Settlement Agreement and its 2008 Addendum. Continuing to perform upgrades to the ECF infrastructure will ensure that operations that continue in ECF are conducted in a safe and environmentally responsible manner. Building a new facility at Location 3/4 will allow the NNPP to utilize existing overpack fabrication and storage buildings and the existing facility for loading M–290 shipping containers for shipments to an interim storage facility or a geologic repository in conjunction with the new facility. Therefore, based on these factors, the NNPP has selected the New Facility Alternative at Location 3/4.

Mitigation Measures

NNPP standards for construction and operation of facilities incorporate engineered and administrative controls to minimize impacts to the environment, workers, and the public. Furthermore, activities are performed to comply with applicable laws and regulations, including obtaining appropriate construction and operating permits. Complying with permits, following standard procedures and management practices, and implementing best management practices, when applicable, are considered part of normal practices and are not included as mitigation measures.

The NNPP will prepare a Mitigation Action Plan (MAP) to track mitigation commitments. The MAP will explain the planned mitigation measures and the monitoring needed to ensure compliance. These measures include actions identified during consultation with agencies and actions where credit is taken for reducing impacts. These mitigation measures are listed below.

Mitigations Identified Through Consultation

Mitigation commitments resulting from consultations with the State Historic Preservation Office (SHPO) and Tribal Government (Appendix B of the EIS) are listed below:

1. Idaho State Historical Society Compliance Archeologist concurred with the recommendation of no adverse effect if ''Recommendations for Additional Project Measures'' as identified in Section 8.3 of the 2013 Cultural Resources Investigations Report are adopted. A subset of the recommendations that meet the definition for mitigations are:

- Monitor sensitive archaeological resources located in proximity to the three defined direct areas of potential effect for indirect impacts and implement protective measures if warranted;
- Conduct cultural resource sensitivity training for personnel to discourage unauthorized artifact collection, off-road vehicle use, and other activities that may impact cultural resources;
- Implement a Stop Work Procedure to guide the assessment and protection of any unanticipated discoveries of cultural materials during construction and operations.

2. Provide the Shoshone-Bannock Tribes Heritage Tribal Office the opportunity to monitor key ground-disturbing activities that occur at NRF in support of the recapitalization activities.

Mitigations Where Credit Is Taken for Impact Reduction

Best Management Practices (BMPs) identified in the EIS that are part of adopted DOE, INL, or NRF plans, contractor stipulations, or listed in standard operating procedures for the DOE, INL, or NRF are not considered a mitigation. Additional BMPs, where credit is taken for reducing an impact are listed below:

1. Use of high-performance generators (Tier-4).

Issued in Washington, DC, on 15 November 2016.

James F. Caldwell, Jr.,

Director, Naval Nuclear Propulsion Program.

[FR Doc. 2016–29203 Filed 12–5–16; 8:45 am]

BILLING CODE 6450–01–P

DEPARTMENT OF ENERGY

Record of Decision and Floodplain Statement of Findings for the Magnolia LNG, LLC Application To Export Liquefied Natural Gas to Non-Free Trade Agreement Countries

AGENCY: Office of Fossil Energy, Department of Energy.

ACTION: Record of Decision.

SUMMARY: The U.S. Department of Energy (DOE) announces its decision in Magnolia LNG, LLC (Magnolia LNG), DOE/FE Docket No. 13–132–LNG, to issue DOE/FE Order No. 3909, granting final long-term, multi contract authorization for Magnolia LNG to engage in the export of domestically produced liquefied natural gas (LNG) from the proposed Magnolia LNG facility located near Lake Charles, Calcasieu Parish, Louisiana, in a volume equivalent to 394.2 Bcf/yr (equal to 1.08 Bcf/day) of natural gas for a term of 25 years. Magnolia LNG is seeking to export LNG from the terminal to countries with which the United States has not entered into a free trade agreement (FTA) that requires national treatment for trade in natural gas, and with which trade is not prohibited by U.S. law or policy (non-FTA countries). Order No. 3909 is issued under section 3 of the Natural Gas Act (NGA) and 10 CFR part 590 of DOE's regulations. DOE participated as a cooperating agency with the Federal Energy Regulatory Commission (FERC) in preparing an environmental impact statement (EIS) [1] analyzing the potential environmental impacts resulting from the proposed LNG facility.

ADDRESSES: The EIS and this Record of Decision (ROD) are available on DOE's National Environmental Policy Act (NEPA) Web site at: *http://energy.gov/nepa/downloads/eis-0498-final-environmental-impact-statement.* Order No. 3909 is available on DOE/FE's Web site at: *http://www.fossil.energy.gov/programs/gasregulation/authorizations/2013_applications/Magnolia_LNG%2C_LLC_-_FE_Dkt._No._13-132-L.html.* For additional information about the docket in these proceedings, contact Larine Moore, U.S. Department of Energy, Office of Regulation and International Engagement, Office of Oil and Natural Gas, Office of Fossil Energy, Room 3E–042, 1000 Independence Avenue SW., Washington, DC 20585.

FOR FURTHER INFORMATION CONTACT: To obtain additional information about the EIS or the ROD, contact Mr. Kyle W. Moorman, U.S. Department of Energy, Office of Regulation and International Engagement, Office of Oil and Natural Gas, Office of Fossil Energy, Room 3E–042, 1000 Independence Avenue SW., Washington, DC 20585, (202) 586–5600, or Mr. Edward Le Duc, U.S. Department of Energy, Office of the Assistant General Counsel for Environment, 1000 Independence Avenue SW., Washington, DC 20585.

SUPPLEMENTARY INFORMATION: DOE prepared this ROD and Floodplain Statement of Findings pursuant to the National Environmental Policy Act of 1969 (42 United States Code [U.S.C.] 4321, *et seq.*), and in compliance with the Council on Environmental Quality (CEQ) implementing regulations for NEPA (40 Code of Federal Regulations [CFR] parts 1500 through 1508), DOE's implementing procedures for NEPA (10 CFR part 1021), and DOE's ''Compliance with Floodplain and Wetland Environmental Review Requirements'' (10 CFR part 1022).

Background

Magnolia LNG, a Delaware limited liability company with its principal place of business in Houston, Texas, proposes to construct liquefaction facilities in Lake Charles, Calcasieu Parish Louisiana (Magnolia LNG Project). The Magnolia LNG Project will connect to the U.S. natural gas pipeline and transmission system through a proposed pipeline system modification and upgrade project (Lake Charles Expansion Project) to an interstate natural gas pipeline owned by Kinder Morgan Louisiana Pipeline LLC (KMLP).

On October 15, 2013, Magnolia LNG filed the application (Application) with DOE/FE seeking authorization to export domestically produced LNG. Magnolia LNG proposes to export this LNG to non-FTA countries in a total volume equivalent to 394.2 billion cubic feet per year (Bcf/yr) of natural gas.

Magnolia LNG has also submitted two applications to DOE/FE for authorizations to export LNG to FTA countries, each in the amount of 197.1 Bcf/yr (0.54 Bcf/day) for a 25-year term, for a combined total authorized FTA export volume of 394.2 Bcf/yr (1.08 Bcf/day). DOE/FE subsequently granted these FTA applications.[2] The authorized

[1] Final Environmental Impact Statement for the Magnolia LNG and Lake Charles Expansion Projects, Docket Nos. CP14–347–000 and CP14–511–000, FERC/EIS—0260F (Nov. 2015).

[2] *Magnolia LNG, LLC,* Order Granting Long-Term Multi-Contract Authorization to Export Liquefied Natural Gas by Vessel from the Proposed Magnolia LNG Terminal in Lake Charles, Louisiana to Free Trade Agreement Nations, DOE/FE Order No. 3245, February 26, 2013 (FE Docket No 12–183–LNG); *Magnolia LNG, LLC,* Order Granting Long-Term Multi-Contract Authorization to Export Liquefied

Continued

FTA export volumes are not additive to the export volumes requested in this proceeding. Therefore, DOE's grant of the pending non-FTA export application in this proceeding will not provide Magnolia LNG with the authority to export more than 394.2 Bcf/yr of natural gas from the Magnolia LNG Project.

In addition to its Application to DOE/FE for export authority, on April 30, 2014, Magnolia LNG submitted an applications to FERC under sections 3 of the NGA for the siting, construction, and operation of the Magnolia LNG Project and, on June 30, 2014, KMLP submitted an application under section 7 of the NGA for approval of the Lake Charles Expansion Project. FERC issued an order granting Magnolia LNG its requested Section 3 authorization and KMLP its requested certificate of public convenience and necessity under Section 7 (c) on April 15, 2016 (the ''FERC Order'').[3]

Project Description

The Magnolia LNG Project will include a new liquefaction facility consisting of four liquefaction trains, two LNG storage tanks with a capacity of approximately 160,000 cubic meters each, a LNG vessel loading berth, and a LNG truck loading area. The Lake Charles Expansion Project will require varying lengths/diameters of new pipeline/pipeline facilities in Acadia, Calcasieu and Evangeline Parishes, Louisiana, to supply natural gas to the liquefaction facility from existing gas transmission pipelines. This pipeline project includes the construction of approximately 6,400 feet of 36-inch-diameter and 700 feet of 24-inch-diameter header pipelines in existing KMLP right-of-way along with one new compressor station.

EIS Process

FERC was the lead federal agency and initiated the NEPA process by publishing a Notice of Intent (NOI) to prepare an EIS for the Magnolia LNG Project in FERC Docket No. PF13–9 on June 18, 2013, and for the Lake Charles Expansion Project in CP14–511 on August 11, 2014. FERC conducted a single environmental review process, that addressed both of these projects and DOE was a cooperating agency. FERC issued the draft EIS for the Liquefaction and Expansion Projects on July 17, 2015 and published in the **Federal Register** a notice of availability (NOA) for the draft EIS on July 24, 2015 (80 FR 44093). FERC issued the final EIS on November 13, 2015 and published a NOA for the final EIS on November 19, 2015 (80 FR 72431). The final EIS addresses comments received on the draft EIS. Among other resource areas, the final EIS addresses groundwater, water resources, socioeconomics, air quality and noise, reliability and safety, and cumulative impacts.

The final EIS recommended that FERC subject any approval of the Magnolia LNG and Lake Charles Expansion Projects to 114 conditions to reduce the environmental impacts that would otherwise result from the construction and operation of the project. Accordingly, FERC issued an Order authorizing the Projects on April 15, 2016, subject to 115 environmental conditions contained in Appendix H of that Order.[4]

In accordance with 40 CFR 1506.3, after an independent review of FERC's final EIS, DOE/FE adopted FERC's final EIS (DOE/EIS–0498). The U.S. Environmental Protection Agency published a notice of the adoption on September 30, 2016 (81 FR 67348).

Addendum to Environmental Review Documents Concerning Exports of Natural Gas From the United States (Addendum)

On June 4, 2014, DOE/FE published the Draft Addendum to Environmental Review Documents Concerning Exports of Natural Gas from the United States (Draft Addendum) for public comment (79 FR 32258). The purpose of this review was to provide additional information to the public concerning the potential environmental impacts of unconventional natural gas exploration and production activities, including hydraulic fracturing. Although not required by NEPA, DOE/FE prepared the Addendum in an effort to be responsive to the public and to provide the best information available on a subject that had been raised by commenters in this and other LNG export proceedings.

The 45-day comment period on the Draft Addendum closed on July 21, 2014. DOE/FE received 40,745 comments in 18 separate submissions, and considered those comments in issuing the Final Addendum on August 15, 2014. DOE provided a summary of the comments received and responses to substantive comments in Appendix B of the Addendum. DOE/FE has incorporated the Draft Addendum, comments, and Final Addendum into the record in this proceeding.

Alternatives

The EIS assessed alternatives that could achieve the Magnolia LNG and Lake Charles Expansion Projects' objectives. The range of alternatives analyzed included the No-Action alternative, system alternatives, site alternatives, and process alternatives. Alternatives were evaluated and compared to the Magnolia LNG and Lake Charles Expansion Projects to determine if the alternatives were environmentally preferable.

In analyzing the No-Action Alternative, the EIS reviewed the effects and actions that could result if the proposed Magnolia LNG and Lake Charles Expansion Projects were not constructed. FERC determined that other LNG export projects could be developed in the Gulf Coast region or elsewhere in the U.S., resulting in both adverse and beneficial environmental impacts. LNG terminal developments and pipeline system expansion of similar scope and magnitude to the proposed projects would likely result in environmental impacts of comparable significance, especially those projects in similar regional settings.

The EIS evaluated system alternatives which included an evaluation of the LNG terminal design as well as the pipeline system. For the LNG terminal, the EIS evaluated nine existing LNG terminals with approved, proposed, or planned status and 19 greenfield LNG terminals that are approved, proposed, or planned along the Gulf Coast of the U.S. In order to be a compatible alternative, it would have to meet Magnolia LNG's purpose and objective: To construct and operate a terminal to serve both domestic and export markets for LNG. The alternatives each lacked infrastructure to support LNG truck loading facilities and/or the proposed liquefaction volume capacity, and were therefore not further considered as viable alternatives.

For the alternatives to the pipeline system, the EIS evaluated three major natural gas pipeline systems within three miles of the proposed site. Although the proposed pipeline expansion requires reconfiguration (*e.g.* new metering station and new interconnect pipeline), the three alternatives either do not meet the necessary capacity requirements or require the construction of longer pipeline connections.

Natural Gas by Vessel from the Proposed Magnolia LNG Terminal in Lake Charles, Louisiana to Free Trade Agreement Nations, DOE/FE Order No. 3406, March 5, 2014 (FE Docket No 13–131–LNG).

[3] *Order Granting Authorization Under Section 3 of the Natural Gas Act and Issuing Certificates,* FERC Docket Nos. CP14–347–000 and CP14–511–000, 155 FERC ¶ 61,033 (issued April 15, 2016).

[4] Within its Order, FERC included an additional condition to the 114 conditions listed in the EIE related to commissioning volumes to its environmental mitigation measures. See Appendix H of the FERC Order for more details.

The EIS evaluated four site alternatives. In order to meet the stated objectives of Magnolia LNG Project, the EIS considered following factors when identifying the site that would most likely pose some environmental advantage to the proposed terminal site: Waterfront access; property size; existing land use; site availability; natural gas pipelines and transmission lines; population center/residences; distance to an interstate highway; and wetlands. After evaluating each of the site alternatives, the EIS concluded that the proposed site would have less impact on wetlands, greater separation between population center/residences, and greater optimization of existing land use.

For the process alternatives, the EIS considered several liquefaction technologies in addition to the proposed Optimized Single Mixed Refrigerant (OSMR) ® Process by LNG Technology). Although the OSMR® Process uses anhydrous ammonia, which present several safety hazards, methods of mitigating the safety hazards are well understood and subject to additional federal regulation. The EIS determined that none of the alternatives would have a significant safety or environmental advantage over the OSMR® Process when considering additional mitigation measure outlined in LNG Facility Siting Requirements at section 4.12.5 of the EIS.

Environmentally Preferred Alternative

When compared against the other action alternatives assessed in the EIS, as discussed above, the proposed Magnolia LNG and Lake Charles Expansion Projects are the environmentally preferred alternative. While the No-Action Alternative would avoid the environmental impacts identified in the EIS, adoption of this alternative would not meet the Magnolia LNG and Lake Charles Expansion Projects objectives.

Decision

DOE has decided to issue Order No. 3909 authorizing Magnolia LNG to export domestically produced LNG by vessel from the Magnolia LNG terminal located in Lake Charles, Calcasieu Parish, Louisiana to non-FTA countries, in a volume up to the equivalent to 394.2 Bcf/yr of natural gas for a term of 25 years to commence on the earlier of the date of first export or seven years from the date that the Order is issued.

Concurrently with this Record of Decision, DOE is issuing Order No. 3909 in which it finds that the requested authorization has not been shown to be inconsistent with the public interest, and the Application should be granted subject to compliance with the terms and conditions set forth in the Order, including the environmental conditions recommended in the EIS and adopted in the FERC Order at Appendix H. Additionally, this authorization is conditioned on Magnolia LNG's compliance with any other mitigation measures imposed by other federal or state agencies.

Basis of Decision

DOE's decision is based upon the analysis of potential environmental impacts presented in the EIS, and DOE's determination in Order No. 3909 that the opponents of Magnolia LNG's Application have failed to overcome the statutory presumption that the proposed export authorization is not inconsistent with the public interest. Although not required by NEPA, DOE/FE also considered the Addendum, which summarizes available information on potential upstream impacts associated with unconventional natural gas activities, such as hydraulic fracturing.

Mitigation

As a condition of its decision to issue Order No. 3909 authorizing Magnolia LNG to export LNG to non-FTA countries, DOE is imposing requirements that will avoid or minimize the environmental impacts of the project. These conditions include the environmental conditions recommended in the EIS and adopted in the FERC Order at Appendix H. Mitigation measures beyond those included in Order No. 3909 that are enforceable by other Federal and state agencies are additional conditions of Order No. 3909. With these conditions, DOE/FE has determined that all practicable means to avoid or minimize environmental harm from the Magnolia LNG and Lake Charles Expansion Projects have been adopted.

Floodplain Statement of Findings

DOE prepared this Floodplain Statement of Findings in accordance with DOE's regulations, entitled ''Compliance with Floodplain and Wetland Environmental Review Requirements'' (10 CFR part 1022). The required floodplain assessment was conducted during development and preparation of the EIS (see Section 4.1.3.3 of the EIS). DOE determined that the majority of the LNG terminal site is outside the 500-year floodplain and the pipeline facilities are outside the 100- and 500-year floodplains. However, placement of some project components within floodplains would be unavoidable. Overall, the current design for the Magnolia LNG and Lake Charles Expansion Projects minimizes floodplain impacts to the extent practicable.

Issued in Washington, DC, on November 30, 2016.

Christopher A. Smith,

Assistant Secretary, Office of Fossil Energy.

[FR Doc. 2016–29206 Filed 12–5–16; 8:45 am]

BILLING CODE 6450–01–P

DEPARTMENT OF ENERGY

Federal Energy Regulatory Commission

[Project No. 1971–079]

Idaho Power Company; Notice of Petition for Declaratory Order

Take notice that on November 23, 2016, Idaho Power Company (Idaho Power), licensee of the Hells Canyon Project No. 1971, filed a petition for a declaratory order (petition) pursuant to Rule 207(a)(2) of the Federal Energy Regulatory Commission's Rules of Practice and Procedure, 18 CFR 385.207(a)(2). Idaho Power requests that the Commission declare that, under the Supremacy Clause of the U.S. Constitution, Part I of the Federal Power Act (FPA) [1] preempts the fish passage provisions contained in Oregon Revised Statute 509.585 with respect to the Hells Canyon Project, all as more fully explained in its petition.

Any person desiring to intervene or to protest this filing must file in accordance with Rules 211 and 214 of the Commission's Rules of Practice and Procedure, 18 CFR 385.211, 385.214. Protests will be considered by the Commission in determining the appropriate action to be taken, but will not serve to make protestants parties to the proceeding. Any person wishing to become a party must file a notice of intervention or motion to intervene, as appropriate. Such notices, motions, or protests must be filed on or before the comment date. Anyone filing a motion to intervene or protest must serve a copy of that document on the Petitioner.

The Commission encourages electronic submission of protests and interventions in lieu of paper using the ''eFiling'' link at *http://www.ferc.gov.* Persons unable to file electronically should submit an original and 5 copies of the protest or intervention to the Federal Energy Regulatory Commission, 888 First Street NE., Washington, DC 20426.

This filing is accessible on-line at *http://www.ferc.gov,* using the

[1] 16 U.S.C. 791a–823d (2016).

''eLibrary'' link and is available for review in the Commission's Public Reference Room in Washington, DC. There is an ''eSubscription'' link on the Web site that enables subscribers to receive email notification when a document is added to a subscribed docket(s). For assistance with any FERC Online service, please email *FERCOnlineSupport@ferc.gov,* or call (866) 208–3676 (toll free). For TTY, call (202) 502–8659.

Comment Date: 5:00 p.m. Eastern Time on December 30, 2016.

Dated: November 30, 2016.

Kimberly D. Bose,

Secretary.

[FR Doc. 2016–29228 Filed 12–5–16; 8:45 am]

BILLING CODE 6717–01–P

DEPARTMENT OF ENERGY

Federal Energy Regulatory Commission

[Docket No. EL17–23–000]

Independent Market Monitor for PJM v. PJM Interconnection, L.L.C.; Notice of Complaint

Take notice that on November 23, 2016, pursuant to section 206 of the Federal Energy Regulatory Commission's (Commission) Rules of Practice and Procedure, 18 CFR 385.206, Independent Market Monitor for PJM (Complainant or PJM) filed a formal complaint against PJM Interconnection, L.L.C. (Respondent or PJM) alleging that, certain modifications to PJM's manual 18 rules are unjust, unreasonable, and inconsistent with competitive markets, all as more fully explained in the complaint.

The Complainant states that a copy of the complaint has been served on the Respondent.

Any person desiring to intervene or to protest this filing must file in accordance with Rules 211 and 214 of the Commission's Rules of Practice and Procedure (18 CFR 385.211, 385.214). Protests will be considered by the Commission in determining the appropriate action to be taken, but will not serve to make protestants parties to the proceeding. Any person wishing to become a party must file a notice of intervention or motion to intervene, as appropriate. The Respondent's answer and all interventions, or protests must be filed on or before the comment date. The Respondent's answer, motions to intervene, and protests must be served on the Complainants.

The Commission encourages electronic submission of protests and interventions in lieu of paper using the ''eFiling'' link at *http://www.ferc.gov.* Persons unable to file electronically should submit an original and 5 copies of the protest or intervention to the Federal Energy Regulatory Commission, 888 First Street NE., Washington, DC 20426.

This filing is accessible on-line at *http://www.ferc.gov,* using the ''eLibrary'' link and is available for electronic review in the Commission's Public Reference Room in Washington, DC. There is an ''eSubscription'' link on the Web site that enables subscribers to receive email notification when a document is added to a subscribed docket(s). For assistance with any FERC Online service, please email *FERCOnlineSupport@ferc.gov,* or call (866) 208–3676 (toll free). For TTY, call (202) 502–8659.

Comment Date: 5:00 p.m. Eastern Time on December 13, 2016.

Dated: November 29, 2016.

Kimberly D. Bose,

Secretary.

[FR Doc. 2016–29223 Filed 12–5–16; 8:45 am]

BILLING CODE 6717–01–P

DEPARTMENT OF ENERGY

Federal Energy Regulatory Commission

[Docket Nos. CP16–22–000; CP16–23–000; CP16–24–000; CP16–102–000]

NEXUS Gas Transmission, LLC; Texas Eastern Transmission, LP; DTE Gas Company; Vector Pipeline L.P.; Notice of Availability of the Final Environmental Impact Statement for the Proposed Nexus Gas Transmission Project and Texas Eastern Appalachian Lease Project

The staff of the Federal Energy Regulatory Commission (FERC or Commission) has prepared a final environmental impact statement (EIS) for the NEXUS Gas Transmission (NGT) Project and Texas Eastern Appalachian Lease (TEAL) Project (jointly referred to as ''Projects''), proposed by NEXUS Gas Transmission, LLC (NEXUS) and Texas Eastern Transmission, LP (Texas Eastern) in the above-referenced dockets. NEXUS and Texas Eastern request authorization to construct a new greenfield pipeline and expand an existing pipeline system from the Appalachian Basin to deliver 1.5 million dekatherms per day to consuming markets in northern Ohio, southeastern Michigan, and Ontario, Canada. DTE Gas Company and Vector Pipeline L.P. are requesting approval to lease capacity on their systems to NEXUS.

The final EIS assesses the potential environmental effects of the construction and operation of the Projects in accordance with the requirements of the National Environmental Policy Act. The FERC staff concludes that approval of the Projects would result in some adverse environmental impacts; however, these impacts would be reduced to acceptable levels with the implementation of NEXUS' and Texas Eastern's proposed mitigation measures and the additional measures recommended by staff in the final EIS.

The U.S. Fish and Wildlife Service (FWS), the U.S. Army Corps of Engineers (COE), and the U.S. Environmental Protection Agency (EPA) participated as cooperating agencies in the preparation of the final EIS. Cooperating agencies have jurisdiction by law or special expertise with respect to resources potentially affected by the proposal and participate in the National Environmental Policy Act analysis. Although the FWS, COE, and EPA provided input to the conclusions and recommendations presented in the final EIS, these agencies will each present their own conclusions and recommendations in their respective record of decision or determination for the Projects.

The final EIS addresses the potential environmental effects of the construction and operation of both the NGT and TEAL Projects. The NGT Project consists of about 256.6 miles of pipeline composed of the following facilities:

- 209.8 miles of new 36-inch-diameter natural gas pipeline in Ohio;
- 46.8 miles of new 36-inch-diameter natural gas pipeline in Michigan;
- associated equipment and facilities.

The TEAL Project would include two main components:

- 4.4 miles of new 36-inch-diameter loop pipeline in Ohio;
- 0.3 mile of new 30-inch-diameter interconnecting pipeline Ohio; and
- associated equipment and facilities.

The Projects' proposed aboveground facilities include five new compressor stations in Ohio; additional compression and related modifications to one existing compressor station in Ohio; five new metering and regulating stations in Ohio; one new metering and regulating station in Michigan; and minor modifications at existing aboveground facilities at various locations across Ohio.

The FERC staff mailed copies of the final EIS to federal, state, and local government representatives and

agencies; elected officials; environmental and public interest groups; Native American tribes; potentially affected landowners and other interested individuals and groups; and newspapers and libraries near the Projects. Paper copy versions of this final EIS were mailed to those specifically requesting them; all others received a CD version. In addition, the final EIS is available for public viewing on the FERC's Web site (*www.ferc.gov*) using the eLibrary link. A limited number of copies are available for distribution and public inspection at: Federal Energy Regulatory Commission, Public Reference Room, 888 First Street NE., Room 2A, Washington, DC 20426, (202) 502–8371.

Additional information about the Projects is available from the Commission's Office of External Affairs, at (866) 208–FERC, or on the FERC Web site (*www.ferc.gov*) using the eLibrary link. Click on the eLibrary link, click on ''General Search,'' and enter the docket number excluding the last three digits in the Docket Number field (*i.e.,* CP16–22). Be sure you have selected an appropriate date range. For assistance, please contact FERC Online Support at *FercOnlineSupport@ferc.gov* or toll free at (866) 208–3676; for TTY, contact (202) 502–8659. The eLibrary link also provides access to the texts of formal documents issued by the Commission, such as orders, notices, and rulemakings.

In addition, the Commission offers a free service called eSubscription that allows you to keep track of all formal issuances and submittals in specific dockets. This can reduce the amount of time you spend researching proceedings by automatically providing you with notification of these filings, document summaries, and direct links to the documents. Go to *www.ferc.gov/docs-filing/esubscription.asp* to subscribe.

Dated: November 30, 2016.

Kimberly D. Bose,

Secretary.

[FR Doc. 2016–29219 Filed 12–5–16; 8:45 am]

BILLING CODE 6717–01–P

DEPARTMENT OF ENERGY

Federal Energy Regulatory Commission

[Docket No. CP17–17–000]

Southwest Gas Storage Company; Notice of Request Under Blanket Authorization

Take notice that on November 18, 2016, Southwest Gas Storage Company (Southwest), 1300 Main Street, Houston, Texas 77002, filed a prior notice application pursuant to sections 157.205, and 157.216(b) of the Federal Energy Regulatory Commission's (Commission) regulations under the Natural Gas Act (NGA), and Southwest's blanket certificate issued in Docket No. CP99–230–000. Southwest requests authorization to plug and abandon fifteen wells and abandon certain related natural gas storage lateral pipelines and appurtenances within Southwest's existing Waverly Storage Field located in Morgan County, Illinois, all as more fully set forth in the application, which is open to the public for inspection. The filing may also be viewed on the Web at *http://www.ferc.gov* using the ''eLibrary'' link. Enter the docket number excluding the last three digits in the docket number field to access the document. For assistance, contact FERC at *FERCOnlineSupport@ferc.gov* or call toll-free, (866) 208–3676 or TTY, (202) 502–8659.

Any questions regarding this application should be directed to Stephen Veatch, Sr. Director of Certificates, Southwest Gas Storage Company, 1300 Main St., Houston, Texas 77002 or phone (713) 989–2024, or fax (713) 989–1205 or by email *stephen.veatch@energytransfer.com.*

Any person or the Commission's staff may, within 60 days after issuance of the instant notice by the Commission, file pursuant to Rule 214 of the Commission's Procedural Rules (18 CFR 385.214) a motion to intervene or notice of intervention and pursuant to Section 157.205 of the regulations under the NGA (18 CFR 157.205), a protest to the request. If no protest is filed within the time allowed therefore, the proposed activity shall be deemed to be authorized effective the day after the time allowed for filing a protest. If a protest is filed and not withdrawn within 30 days after the allowed time for filing a protest, the instant request shall be treated as an application for authorization pursuant to section 7 of the NGA.

Pursuant to section 157.9 of the Commission's rules, 18 CFR 157.9, within 90 days of this Notice the Commission staff will either: Complete its environmental assessment (EA) and place it into the Commission's public record (eLibrary) for this proceeding, or issue a Notice of Schedule for Environmental Review. If a Notice of Schedule for Environmental Review is issued, it will indicate, among other milestones, the anticipated date for the Commission staff's issuance of the final environmental impact statement (FEIS) or EA for this proposal. The filing of the EA in the Commission's public record for this proceeding or the issuance of a Notice of Schedule for Environmental Review will serve to notify federal and state agencies of the timing for the completion of all necessary reviews, and the subsequent need to complete all federal authorizations within 90 days of the date of issuance of the Commission staff's FEIS or EA.

Persons who wish to comment only on the environmental review of this project should submit an original and two copies of their comments to the Secretary of the Commission. Environmental commenters will be placed on the Commission's environmental mailing list, will receive copies of the environmental documents, and will be notified of meetings associated with the Commission's environmental review process. Environmental commenters will not be required to serve copies of filed documents on all other parties. However, the non-party commenter will not receive copies of all documents filed by other parties or issued by the Commission (except for the mailing of environmental documents issued by the Commission) and will not have the right to seek court review of the Commission's final order.

The Commission strongly encourages electronic filings of comments, protests and interventions in lieu of paper using the ''eFiling'' link at *http://www.ferc.gov.* Persons unable to file electronically should submit an original and 5 copies of the protest or intervention to the Federal Energy Regulatory Commission, 888 First Street NE., Washington, DC 20426.

Dated: November 29, 2016.

Kimberly D. Bose,

Secretary.

[FR Doc. 2016–29222 Filed 12–5–16; 8:45 am]

BILLING CODE 6717–01–P

DEPARTMENT OF ENERGY

Federal Energy Regulatory Commission

[Docket No. EL17–22–000]

Independent Market Monitor for PJM v. American Electric Power Service Corp.; Notice of Complaint

Take notice that on November 30, 2016, Independent Market Monitor for PJM (Complainant or PJM) filed a complaint against American Electric Power Service Corp. (Respondent or AEP). PJM complains that AEP refused to provide certain information in

response to information requests sent by PJM's Market Monitor Unit and request that the Commission issue an order directing AEP to provide the information, all as more fully explained in the complaint.

Any person desiring to intervene or to protest this filing must file in accordance with Rules 211 and 214 of the Commission's Rules of Practice and Procedure (18 CFR 385.211, 385.214). Protests will be considered by the Commission in determining the appropriate action to be taken, but will not serve to make protestants parties to the proceeding. Any person wishing to become a party must file a notice of intervention or motion to intervene, as appropriate. The Respondent's answer and all interventions, or protests must be filed on or before the comment date. The Respondent's answer, motions to intervene, and protests must be served on the Complainants.

The Commission encourages electronic submission of protests and interventions in lieu of paper using the ''eFiling'' link at *http://www.ferc.gov.* Persons unable to file electronically should submit an original and 5 copies of the protest or intervention to the Federal Energy Regulatory Commission, 888 First Street NE., Washington, DC 20426.

This filing is accessible on-line at *http://www.ferc.gov,* using the ''eLibrary'' link and is available for electronic review in the Commission's Public Reference Room in Washington, DC. There is an ''eSubscription'' link on the Web site that enables subscribers to receive email notification when a document is added to a subscribed docket(s). For assistance with any FERC Online service, please email *FERCOnlineSupport@ferc.gov,* or call (866) 208–3676 (toll free). For TTY, call (202) 502–8659.

Comment Date: 5:00 p.m. Eastern Time on December 20, 2016.

Dated: November 30, 2016.

Kimberly D. Bose,

Secretary.

[FR Doc. 2016–29224 Filed 12–5–16; 8:45 am]

BILLING CODE 6717–01–P

DEPARTMENT OF ENERGY

Federal Energy Regulatory Commission

[Docket No. CP17–14–000]

UGI LNG, Inc.; Notice of Application

Take notice that on November 14, 2016, UGI LNG, INC. (UGI LNG) One Meridian Boulevard, Suite 2C01, Wyomissing, Pennsylvania 19610, filed in Docket No. CP17–14–000, an application pursuant to section 7(c) of the Natural Gas Act and Part 157 of the Commission's regulations, for a certificate of public convenience and necessity to construct and operate its Temple Truck Rack Expansion Project at UGI LNG's Temple liquefied natural gas (LNG) storage facility located in Berks County, Pennsylvania. Specifically, UGI LNG requests to operate two new trailer loading and unloading racks at UGI LNG's Temple LNG storage facility. The project will be installed within the Temple Facility's existing footprint, and will consist of two racks with scales, trailer loading skid, pump skid, transfer piping and associated equipment. In addition, UGI LNG will also construct a new, approximately 1,500-foot driveway connecting the expansion to Willow Creek Road. The project will enable UGI LNG to provide more reliable service to its customers by allowing increased flexibility, coordination, and throughput of intra-tank transfers, all as more fully set forth in the application, which is on file with the Commission and open to public inspection. The filing may also be viewed on the web at *http://www.ferc.gov* using the ''eLibrary'' link. Enter the docket number excluding the last three digits in the docket number field to access the document. For assistance, contact FERC at *FERCOnlineSupport@ferc.gov* or call toll-free, (866) 208–3676 or TTY, (202) 502–8659.

Any questions regarding this application should be directed to Frank H. Markle, 460 N. Gulph Road, King of Prussia, PA 19406, or phone by: (610) 768–3625, or by email: *marklef@ugicorp.com.*

Pursuant to section 157.9 of the Commission's rules, 18 CFR 157.9, within 90 days of this Notice the Commission staff will either: Complete its environmental assessment (EA) and place it into the Commission's public record (eLibrary) for this proceeding; or issue a Notice of Schedule for Environmental Review. If a Notice of Schedule for Environmental Review is issued, it will indicate, among other milestones, the anticipated date for the Commission staff's issuance of the final environmental impact statement (FEIS) or EA for this proposal. The filing of the EA in the Commission's public record for this proceeding or the issuance of a Notice of Schedule for Environmental Review will serve to notify federal and state agencies of the timing for the completion of all necessary reviews, and the subsequent need to complete all federal authorizations within 90 days of the date of issuance of the Commission staff's FEIS or EA.

There are two ways to become involved in the Commission's review of this project. First, any person wishing to obtain legal status by becoming a party to the proceedings for this project should, on or before the comment date stated below, file with the Federal Energy Regulatory Commission, 888 First Street NE., Washington, DC 20426, a motion to intervene in accordance with the requirements of the Commission's Rules of Practice and Procedure (18 CFR 385.214 or 385.211) and the Regulations under the NGA (18 CFR 157.10). A person obtaining party status will be placed on the service list maintained by the Secretary of the Commission and will receive copies of all documents filed by the applicant and by all other parties. A party must submit 7 copies of filings made with the Commission and must mail a copy to the applicant and to every other party in the proceeding. Only parties to the proceeding can ask for court review of Commission orders in the proceeding.

However, a person does not have to intervene in order to have comments considered. The second way to participate is by filing with the Secretary of the Commission, as soon as possible, an original and two copies of comments in support of or in opposition to this project. The Commission will consider these comments in determining the appropriate action to be taken, but the filing of a comment alone will not serve to make the filer a party to the proceeding. The Commission's rules require that persons filing comments in opposition to the project provide copies of their protests only to the party or parties directly involved in the protest.

Persons who wish to comment only on the environmental review of this project should submit an original and two copies of their comments to the Secretary of the Commission. Environmental commentors will be placed on the Commission's environmental mailing list, will receive copies of the environmental documents, and will be notified of meetings associated with the Commission's environmental review process. Environmental commentors will not be required to serve copies of filed documents on all other parties. However, the non-party commentors will not receive copies of all documents filed by other parties or issued by the Commission (except for the mailing of environmental documents issued by the Commission) and will not have the right to seek court review of the Commission's final order.

The Commission strongly encourages electronic filings of comments, protests and interventions in lieu of paper using the ''eFiling'' link at *http://www.ferc.gov.* Persons unable to file electronically should submit an original and 5 copies of the protest or intervention to the Federal Energy Regulatory Commission, 888 First Street NE., Washington, DC 20426.

There is an ''eSubscription'' link on the Web site that enables subscribers to receive email notification when a document is added to a subscribed docket(s). For assistance with any FERC Online service, please email *FERCOnlineSupport@ferc.gov,* or call (866) 208–3676 (toll free). For TTY, call (202) 502–8659.

Comment Date: December 20, 2016.

Dated: November 29, 2016.

Kimberly D. Bose,

Secretary.

[FR Doc. 2016–29220 Filed 12–5–16; 8:45 am]

BILLING CODE 6717–01–P

DEPARTMENT OF ENERGY

Federal Energy Regulatory Commission

[Docket No. CP17–15–000]

Dominion Cove Point LNG, LP; Notice of Application

Take notice that on November 15, 2016, Dominion Cove Point LNG, LP (Cove Point), 707 East Main Street, Richmond, Virginia, filed in Docket No. CP17–15–000, an application pursuant to section 7(c) of the Natural Gas Act and Part 157 of the Commission's regulations requesting authorization of its Eastern Market Access Project (Project) consisting of one new compressor station, additional compression at an existing station, and re-wheeling of a compressor unit at an existing compressor station for an increase of 31,370 horsepower in Charles County, Maryland and Loudon and Fairfax Counties, Virginia. The Project would also construct two new delivery taps in Charles County, Maryland. The Project would cost approximately $147.3 million and would enable 294,000 dekatherms per day of firm natural gas transportation service to Washington Gas Light Company and Mattawoman Energy, LLC, all as more fully set forth in the application which is on file with the Commission and open to public inspection. This filing may be viewed on the web at *http://www.ferc.gov* using the ''eLibrary'' link. Enter the docket number excluding the last three digits in the docket number field to access the document. For assistance, please contact FERC at *FERCOnlineSupport@ferc.gov* or call toll-free, (886) 208–3676 or TYY, (202) 502–8659.

Any questions regarding this Application should be directed to Salud Astruc, Gas Transmission Certificates, Dominion Cove Point LNG, LP, 707 East Main Street, Richmond, Virginia 23219, or by telephone at (866) 319–3382.

Pursuant to section 157.9 of the Commission's rules, 18 CFR 157.9, within 90 days of this Notice the Commission staff will either: Complete its environmental assessment (EA) and place it into the Commission's public record (eLibrary) for this proceeding; or issue a Notice of Schedule for Environmental Review. If a Notice of Schedule for Environmental Review is issued, it will indicate, among other milestones, the anticipated date for the Commission staff's issuance of the final environmental impact statement (FEIS) or EA for this proposal. The filing of the EA in the Commission's public record for this proceeding or the issuance of a Notice of Schedule for Environmental Review will serve to notify federal and state agencies of the timing for the completion of all necessary reviews, and the subsequent need to complete all federal authorizations within 90 days of the date of issuance of the Commission staff's FEIS or EA.

There are two ways to become involved in the Commission's review of this project. First, any person wishing to obtain legal status by becoming a party to the proceedings for this project should, on or before the comment date stated below, file with the Federal Energy Regulatory Commission, 888 First Street NE., Washington, DC 20426, a motion to intervene in accordance with the requirements of the Commission's Rules of Practice and Procedure (18 CFR 385.214 or 385.211) and the Regulations under the NGA (18 CFR 157.10). A person obtaining party status will be placed on the service list maintained by the Secretary of the Commission and will receive copies of all documents filed by the applicant and by all other parties. A party must submit 7 copies of filings made with the Commission and must mail a copy to the applicant and to every other party in the proceeding. Only parties to the proceeding can ask for court review of Commission orders in the proceeding.

However, a person does not have to intervene in order to have comments considered. The second way to participate is by filing with the Secretary of the Commission, as soon as possible, an original and two copies of comments in support of or in opposition to this project. The Commission will consider these comments in determining the appropriate action to be taken, but the filing of a comment alone will not serve to make the filer a party to the proceeding. The Commission's rules require that persons filing comments in opposition to the project provide copies of their protests only to the party or parties directly involved in the protest.

Persons who wish to comment only on the environmental review of this project should submit an original and two copies of their comments to the Secretary of the Commission. Environmental commenter's will be placed on the Commission's environmental mailing list, will receive copies of the environmental documents, and will be notified of meetings associated with the Commission's environmental review process. Environmental commenter's will not be required to serve copies of filed documents on all other parties. However, the non-party commentary, will not receive copies of all documents filed by other parties or issued by the Commission (except for the mailing of environmental documents issued by the Commission) and will not have the right to seek court review of the Commission's final order.

The Commission strongly encourages electronic filings of comments, protests and interventions in lieu of paper using the ''eFiling'' link at *http://www.ferc.gov.* Persons unable to file electronically should submit an original and 5 copies of the protest or intervention to the Federal Energy Regulatory Commission, 888 First Street NE., Washington, DC 20426. See, 18 CFR 385.2001(a) (1) (iii) and the instructions on the Commission's Web site under the ''e-Filing'' link.

Comment Date: 5:00 p.m. Eastern Time on December 21, 2016.

Dated: November 30, 2016.

Kimberly D. Bose,

Secretary.

[FR Doc. 2016–29221 Filed 12–5–16; 8:45 am]

BILLING CODE 6717–01–P

DEPARTMENT OF ENERGY

Federal Energy Regulatory Commission

[Project No. 11834–065]

Brookfield White Pine Hydro, LLC; Notice of Application Accepted for Filing, Soliciting Comments, Motions To Intervene, and Protests

Take notice that the following hydroelectric application has been filed with the Commission and is available for public inspection:

a. *Type of Application:* Application for Temporary Variance of Minimum Flow Requirements.

b. *Project No.:* 11834–065.

c. *Date Filed:* November 23, 2016.

d. *Applicant:* Brookfield White Pine Hydro, LLC (licensee).

e. *Name of Project:* Upper and Middle Dams Storage Hydroelectric Project.

f. *Location:* Rapid River in Oxford and Franklin counties, Maine.

g. *Filed Pursuant to:* Federal Power Act, 16 U.S.C. 791(a)–825(r).

h. *Applicant Contact:* Kelly Maloney, Manager, Licensing and Compliance, Brookfield White Pine Hydro LLC, 150 Main Street, Lewiston, ME 04240, Phone: (207) 755–5605.

i. *FERC Contact:* Robert Ballantine, (202) 502–6289, or *robert.ballantine@ferc.gov*.

j. Deadline for filing comments, motions to intervene, protests, and recommendations is 30 days from the issuance date of this notice (by December 29, 2016). The Commission strongly encourages electronic filing. Please file motions to intervene, protests, comments, or recommendations using the Commission's eFiling system at *http://www.ferc.gov/docs-filing/efiling.asp.* Commenters can submit brief comments up to 6,000 characters, without prior registration, using the eComment system at *http://www.ferc.gov/docs-filing/ecomment.asp.* You must include your name and contact information at the end of your comments. For assistance, please contact FERC Online Support at *FERCOnlineSupport@ferc.gov,* (866) 208–3676 (toll free), or (202) 502–8659 (TTY). In lieu of electronic filing, please send a paper copy to: Secretary, Federal Energy Regulatory Commission, 888 First Street NE., Washington, DC 20426. Please include the project number (P–11834–065) on any comments, motions to intervene, protests, or recommendations filed.

k. *Description of Request:* The licensee requests a temporary variance of the minimum flow requirements in the Rapid River below the Middle Dam development due to drought conditions. License Article 402, in part, requires the licensee to release from September 16 through the start of the spring refill of Richardson Lake, a minimum flow of 472 cubic feet per second (cfs). The licensee explains that due to drought conditions, Richardson Lake is below its long term average. Considering a dry long term precipitation forecast and the impending winter freeze up, the licensee is concerned that the reservoir may not refill by spring as intended, which could cause additional water level and minimum flow issues in the spring of 2017. Therefore in order to conserve as much fall runoff as possible, the licensee is requesting to reduce the minimum flow to 200 cfs until April 23, 2017, at which time a minimum flow of 382 cfs would be released in accordance with the requirements of Article 402.

l. *Locations of the Application:* A copy of the application is available for inspection and reproduction at the Commission's Public Reference Room, located at 888 First Street NE., Room 2A, Washington, DC 20426, or by calling (202) 502–8371. This filing may also be viewed on the Commission's Web site at *http://www.ferc.gov/docs-filing/elibrary.asp.* Enter the docket number excluding the last three digits in the docket number field to access the document. You may also register online at *http://www.ferc.gov/docs-filing/esubscription.asp* to be notified via email of new filings and issuances related to this or other pending projects. For assistance, call 1–866–208–3676 or email *FERCOnlineSupport@ferc.gov,* for TTY, call (202) 502–8659. A copy is also available for inspection and reproduction at the address in item (h) above.

m. Individuals desiring to be included on the Commission's mailing list should so indicate by writing to the Secretary of the Commission.

n. Comments, Protests, or Motions to Intervene: Anyone may submit comments, a protest, or a motion to intervene in accordance with the requirements of Rules of Practice and Procedure, 18 CFR 385.210, .211, .214. In determining the appropriate action to take, the Commission will consider all protests or other comments filed, but only those who file a motion to intervene in accordance with the Commission's Rules may become a party to the proceeding. Any comments, protests, or motions to intervene must be received on or before the specified comment date for the particular application.

o. Filing and Service of Responsive Documents: Any filing must (1) bear in all capital letters the title ''COMMENTS'', ''PROTEST'', or ''MOTION TO INTERVENE'' as applicable; (2) set forth in the heading the name of the applicant and the project number of the application to which the filing responds; (3) furnish the name, address, and telephone number of the person protesting or intervening; and (4) otherwise comply with the requirements of 18 CFR 385.2001 through 385.2005. All comments, motions to intervene, or protests must set forth their evidentiary basis and otherwise comply with the requirements of 18 CFR 4.34(b). All comments, motions to intervene, or protests should relate to project works which are the subject of proposed action. Agencies may obtain copies of the application directly from the applicant. A copy of any protest or motion to intervene must be served upon each representative of the applicant specified in the particular application. If an intervener files comments or documents with the Commission relating to the merits of an issue that may affect the responsibilities of a particular resource agency, they must also serve a copy of the document on that resource agency. A copy of all other filings in reference to this application must be accompanied by proof of service on all persons listed in the service list prepared by the Commission in this proceeding, in accordance with 18 CFR 4.34(b) and 385.2010.

Dated: November 29, 2016.

Kimberly D. Bose,

Secretary.

[FR Doc. 2016–29226 Filed 12–5–16; 8:45 am]

BILLING CODE 6717–01–P

DEPARTMENT OF ENERGY

Federal Energy Regulatory Commission

[Docket No. CP17–9–000]

ANR Pipeline Company; Notice of Intent To Prepare an Environmental Assessment for the Proposed Wisconsin South Expansion Project, and Request for Comments on Environmental Issues

The staff of the Federal Energy Regulatory Commission (FERC or Commission) will prepare an environmental assessment (EA) that will discuss the environmental impacts of the Wisconsin South Expansion Project (Project) involving replacement and expansion of existing aboveground facilities by ANR Pipeline Company (ANR) in the area west and southwest of

Lake Michigan. The Commission will use this EA in its decision-making process to determine whether the project is in the public convenience and necessity.

This notice announces the opening of the scoping process the Commission will use to gather input from the public and interested agencies on the project. You can make a difference by providing us with your specific comments or concerns about the project. Your comments should focus on the potential environmental effects, reasonable alternatives, and measures to avoid or lessen environmental impacts. Your input will help the Commission staff determine what issues they need to evaluate in the EA. To ensure that your comments are timely and properly recorded, please send your comments so that the Commission receives them in Washington, DC, on or before December 29, 2016.

If you sent comments on this project to the Commission before the opening of this docket on November 3, 2016, you will need to file those comments in Docket No. CP17–9–000 to ensure they are considered as part of this proceeding.

This notice is being sent to the Commission's current environmental mailing list for this project. State and local government representatives should notify their constituents of this proposed project and encourage them to comment on their areas of concern.

If you are a landowner receiving this notice, a pipeline company representative may contact you about the acquisition of an easement to construct, operate, and maintain the proposed facilities. The company would seek to negotiate a mutually acceptable agreement. However, if the Commission approves the project, that approval conveys with it the right of eminent domain. Therefore, if easement negotiations fail to produce an agreement, the pipeline company could initiate condemnation proceedings where compensation would be determined in accordance with state law.

ANR provided landowners within 0.5 mile of proposed expansion facilities with a fact sheet prepared by the FERC entitled ''An Interstate Natural Gas Facility On My Land? What Do I Need To Know?'' This fact sheet addresses a number of typically asked questions, including the use of eminent domain and how to participate in the Commission's proceedings. It is also available for viewing on the FERC Web site (*www.ferc.gov*).

Public Participation

For your convenience, there are three methods you can use to submit your comments to the Commission. The Commission encourages electronic filing of comments and has expert staff available to assist you at (202) 502–8258 or *efiling@ferc.gov.* Please carefully follow these instructions so that your comments are properly recorded.

(1) You can file your comments electronically using the *eComment* feature on the Commission's Web site (*www.ferc.gov*) under the link to *Documents and Filings.* This is an easy method for submitting brief, text-only comments on a project;

(2) You can file your comments electronically by using the *eFiling* feature on the Commission's Web site (*www.ferc.gov*) under the link to *Documents and Filings.* With eFiling, you can provide comments in a variety of formats by attaching them as a file with your submission. New eFiling users must first create an account by clicking on ''*eRegister.*'' If you are filing a comment on a particular project, please select ''Comment on a Filing'' as the filing type; or

(3) You can file a paper copy of your comments by mailing them to the following address. Be sure to reference the project docket number (CP17–9–000) with your submission: Kimberly D. Bose, Secretary, Federal Energy Regulatory Commission, 888 First Street NE., Room 1A, Washington, DC 20426.

Summary of the Proposed Project

ANR is proposing to expand ANR's delivery by 230,950 dekatherms per day (Dth/d), into the Northern Illinois and Wisconsin market areas by modifying five existing ANR facilities, to meet growing natural gas demand and enhance ANR's system reliability in Northern Illinois and Wisconsin.

The Project would consist of the following facilities:

1. Install one new 6,130-horsepower (HP) Solar Centaur 50 compressor unit and appurtenant facilities at ANR's existing Sandwich Compressor Station in Kendall County, Illinois;

2. increase capacity of the existing Hampshire Meter Station in Kane County, Illinois from the current 300 million cubic feet per day (MMCFD) to 500 MMCFD;

3. replace the existing 0.54-mile Line 332 Lateral located in Kane County, Illinois, which originates at the Hampshire Meter Station;

4. increase capacity of ANR's existing Tiffany East Meter Station in Rock County, Wisconsin from the current 118 MMCFD to 237 MMCFD; and

5. Re-stage an existing Saturn 10 turbine compressor unit at ANR's Kewaskum Compressor Station in Sheboygan County, Wisconsin.

The general location of the project facilities is shown in appendix 1.[1]

Land Requirements for Construction

Most of the Project impacts would occur within existing facilities in areas that have been previously disturbed or are currently in agricultural use. A total of 56.23 acres would be used as construction workspace, of which 46.30 acres are existing permanent easement and 9.45 acres would be restored to pre-existing conditions after construction is completed. Approximately 0.16 acres would be converted to new permanent easement at the Hampshire Meter Station and 0.32 acres would be converted to new permanent easement for the Line 332 Lateral Replacement.

The EA Process

The National Environmental Policy Act (NEPA) requires the Commission to take into account the environmental impacts that could result from an action whenever it considers the issuance of a Certificate of Public Convenience and Necessity. NEPA also requires us[2] to discover and address concerns the public may have about proposals. This process is referred to as ''scoping.'' The main goal of the scoping process is to focus the analysis in the EA on the important environmental issues. By this notice, the Commission requests public comments on the scope of the issues to address in the EA. We will consider all filed comments during the preparation of the EA.

In the EA we will discuss impacts that could occur as a result of the construction and operation of the proposed project under these general headings:

- Water resources, fisheries, and wetlands;
- cultural resources;
- vegetation and wildlife;
- air quality and noise;
- endangered and threatened species;
- public safety; and
- cumulative impacts

We will also evaluate reasonable alternatives to the proposed project or

[1] The appendices referenced in this notice will not appear in the **Federal Register**. Copies of appendices were sent to all those receiving this notice in the mail and are available at *www.ferc.gov* using the link called ''eLibrary'' or from the Commission's Public Reference Room, 888 First Street NE., Washington, DC 20426, or call (202) 502–8371. For instructions on connecting to eLibrary, refer to the last page of this notice.

[2] ''We,'' ''us,'' and ''our'' refer to the environmental staff of the Commission's Office of Energy Projects.

portions of the project, and make recommendations on how to lessen or avoid impacts on the various resource areas.

The EA will present our independent analysis of the issues. The EA will be available in the public record through eLibrary. Depending on the comments received during the scoping process, we may also publish and distribute the EA to the public for an allotted comment period. We will consider all comments on the EA before making our recommendations to the Commission. To ensure we have the opportunity to consider and address your comments, please carefully follow the instructions in the Public Participation section, beginning on page [2].

With this notice, we are asking agencies with jurisdiction by law and/or special expertise with respect to the environmental issues of this project to formally cooperate with us in the preparation of the EA.[3] Agencies that would like to request cooperating agency status should follow the instructions for filing comments provided under the Public Participation section of this notice.

Consultations Under Section 106 of the National Historic Preservation Act

In accordance with the Advisory Council on Historic Preservation's implementing regulations for section 106 of the National Historic Preservation Act, we are using this notice to initiate consultation with the applicable State Historic Preservation Office. (SHPO), and to solicit their views and those of other government agencies, interested Indian tribes, and the public on the project's potential effects on historic properties.[4] We will define the project-specific Area of Potential Effects (APE) in consultation with the SHPO as the project develops. On natural gas facility projects, the APE at a minimum encompasses all areas subject to ground disturbance (examples include construction right-of-way, contractor/pipe storage yards, compressor stations, and access roads). Our EA for this project will document our findings on the impacts on historic properties and summarize the status of consultations under section 106.

Environmental Mailing List

The environmental mailing list includes federal, state, and local government representatives and agencies; elected officials; environmental and public interest groups; Native American Tribes; other interested parties; and local libraries and newspapers. This list also includes all affected landowners (as defined in the Commission's regulations) who are potential right-of-way grantors, whose property may be used temporarily for project purposes, or who own homes within certain distances of aboveground facilities, and anyone who submits comments on the project. We will update the environmental mailing list as the analysis proceeds to ensure that we send the information related to this environmental review to all individuals, organizations, and government entities interested in and/or potentially affected by the proposed project.

If we publish and distribute the EA, copies of the EA will be sent to the environmental mailing list for public review and comment. If you would prefer to receive a paper copy of the document instead of the CD version or would like to remove your name from the mailing list, please return the attached Information Request (appendix 2).

Becoming an Intervenor

In addition to involvement in the EA scoping process, you may want to become an ''intervenor'' which is an official party to the Commission's proceeding. Intervenors play a more formal role in the process and are able to file briefs, appear at hearings, and be heard by the courts if they choose to appeal the Commission's final ruling. An intervenor formally participates in the proceeding by filing a request to intervene. Instructions for becoming an intervenor are in the ''Document-less Intervention Guide'' under the ''e-filing'' link on the Commission's Web site. Motions to intervene are more fully described at *http://www.ferc.gov/resources/guides/how-to/intervene.asp.*

Additional Information

Additional information about the project is available from the Commission's Office of External Affairs, at (866) 208–FERC, or on the FERC Web site at *www.ferc.gov* using the ''eLibrary'' link. Click on the eLibrary link, click on ''General Search'' and enter the docket number, excluding the last three digits in the Docket Number field (*i.e.,* CP17–9–000). Be sure you have selected an appropriate date range. For assistance, please contact FERC Online Support at *FercOnlineSupport@ferc.gov* or toll free at (866) 208–3676, or for TTY, contact (202) 502–8659. The eLibrary link also provides access to the texts of formal documents issued by the Commission, such as orders, notices, and rulemakings.

In addition, the Commission offers a free service called eSubscription which allows you to keep track of all formal issuances and submittals in specific dockets. This can reduce the amount of time you spend researching proceedings by automatically providing you with notification of these filings, document summaries, and direct links to the documents. Go to *www.ferc.gov/docs-filing/esubscription.asp.*

Finally, public meetings or site visits will be posted on the Commission's calendar located at *www.ferc.gov/EventCalendar/EventsList.aspx* along with other related information.

Dated: November 29, 2016.

Kimberly D. Bose,

Secretary.

[FR Doc. 2016–29218 Filed 12–5–16; 8:45 am]

BILLING CODE 6717–01–P

[3] The Council on Environmental Quality regulations addressing cooperating agency responsibilities are at Title 40, Code of Federal Regulations, Part 1501.6.

[4] The Advisory Council on Historic Preservation's regulations are at Title 36, Code of Federal Regulations, Part 800. Those regulations define historic properties as any prehistoric or historic district, site, building, structure, or object included in or eligible for inclusion in the National Register of Historic Places.

DEPARTMENT OF ENERGY

Federal Energy Regulatory Commission

[Docket No. CP17–18–000]

Columbia Gas Transmission, LLC; Notice of Request Under Blanket Authorization

Take notice that on November 18, 2016, Columbia Gas Transmission, LLC (Columbia), 5151 San Felipe, Suite 2500, Houston, Texas 77056, filed in Docket No. CP17–18–000 a prior notice request pursuant to sections 157.205 and 157.208 of the Commission's regulations under the Natural Gas Act (NGA), and Columbia's blanket certificate issued in Docket No. CP83–76–000, to construct and modify certain facilities on its existing Line V located in Holmes, Wayne, Stark, Carroll, and Columbiana Counties, Ohio (Line V Project). Columbia states that its Line V Project involves the installation of bi-directional launcher/receivers allowing Line V to be pigged for integrity assessment of multiple high consequence areas. The existing Line V extends approximately 70.0 miles from Holmes Compressor Station located in Holmes County, Ohio to Dungannon Measuring Station located in Columbiana County, Ohio. Columbia states that the proposed Line V Project includes 45 modifications and estimates the cost of the project to be $14.3

million, all as more fully set forth in the application which is on file with the Commission and open to public inspection. The filing may also be viewed on the web at *http://www.ferc.gov* using the ''eLibrary'' link. Enter the docket number excluding the last three digits in the docket number field to access the document. For assistance, please contact FERC Online Support at *FERCOnlineSupport@ferc.gov* or toll free at (866) 208–3676, or TTY, contact (202) 502–8659.

Any questions concerning this application may be directed to Robert D. Jackson, Manager, Certificates & Regulatory Administration, Columbia Gas Transmission, LLC, 700 Louisiana Street, Suite 700, Houston, TX 77002–2700, by telephone at (832) 320–5487, or by email at *robert_jackson@transcanada.com.*

Any person or the Commission's staff may, within 60 days after issuance of the instant notice by the Commission, file pursuant to Rule 214 of the Commission's Procedural Rules (18 CFR 385.214) a motion to intervene or notice of intervention and pursuant to section 157.205 of the regulations under the NGA (18 CFR 157.205), a protest to the request. If no protest is filed within the time allowed therefore, the proposed activity shall be deemed to be authorized effective the day after the time allowed for filing a protest. If a protest is filed and not withdrawn within 30 days after the allowed time for filing a protest, the instant request shall be treated as an application for authorization pursuant to section 7 of the NGA.

Pursuant to section 157.9 of the Commission's rules, 18 CFR 157.9, within 90 days of this Notice the Commission staff will either: Complete its environmental assessment (EA) and place it into the Commission's public record (eLibrary) for this proceeding, or issue a Notice of Schedule for Environmental Review. If a Notice of Schedule for Environmental Review is issued, it will indicate, among other milestones, the anticipated date for the Commission staff's issuance of the final environmental impact statement (FEIS) or EA for this proposal. The filing of the EA in the Commission's public record for this proceeding or the issuance of a Notice of Schedule for Environmental Review will serve to notify federal and state agencies of the timing for the completion of all necessary reviews, and the subsequent need to complete all federal authorizations within 90 days of the date of issuance of the Commission staff's FEIS or EA.

Persons who wish to comment only on the environmental review of this project should submit an original and two copies of their comments to the Secretary of the Commission. Environmental commenters will be placed on the Commission's environmental mailing list, will receive copies of the environmental documents, and will be notified of meetings associated with the Commission's environmental review process. Environmental commenters will not be required to serve copies of filed documents on all other parties. However, the non-party commenters, will not receive copies of all documents filed by other parties or issued by the Commission (except for the mailing of environmental documents issued by the Commission) and will not have the right to seek court review of the Commission's final order.

The Commission strongly encourages electronic filings of comments, protests and interventions in lieu of paper using the ''eFiling'' link at *http://www.ferc.gov.* Persons unable to file electronically should submit an original and seven copies of the protest or intervention to the Federal Energy Regulatory Commission, 888 First Street NE., Washington, DC 20426.

Dated: November 28, 2016.

Kimberly D. Bose,

Secretary.

[FR Doc. 2016–29227 Filed 12–5–16; 8:45 am]

BILLING CODE 6717–01–P

DEPARTMENT OF ENERGY

Federal Energy Regulatory Commission

[P–6764–038]

BMB Enterprises, Inc.; Notice of Application Accepted for Filing and Soliciting Comments, Motions To Intervene, and Protests

Take notice that the following hydroelectric application has been filed with the Commission and is available for public inspection:

a. *Type of Application:* Amendment of License.

b. *Project No.:* 6764–038.

c. *Date Filed:* July 18, 2016.

d. *Applicant:* BMB Enterprises, Inc.

e. *Name of Project:* Sixmile Creek Hydroelectric Project.

f. *Location:* The project is located on the Sixmile Creek in Sanpete County, Utah.

g. *Filed Pursuant to:* Federal Power Act, 16 U.S.C. 791 (a)–825(r).

h. *Applicant Contact:* Mr. Brad F. Hutchings, BMB Enterprises, Inc., 282 North 1350 East, Bountiful, Utah 84010, (801) 298–7383.

i. *FERC Contact:* Anumzziatta Purchiaroni, (202) 502–6191, *anumzziatta.purchiaroni@ferc.gov.*

j. Deadline for filing comments, motions to intervene, and protests is 30 days from the issuance of this notice by the Commission. The Commission strongly encourages electronic filing. Please file comments, motions to intervene, and protests using the Commission's eFiling system at *http://www.ferc.gov/docs-filing/efiling.asp.* Commenters can submit brief comments up to 6,000 characters, without prior registration, using the eComment system at *http://www.ferc.gov/docs-filing/ecomment.asp.* You must include your name and contact information at the end of your comments. For assistance, please contact FERC Online Support at *FERCOnlineSupport@ferc.gov,* (866) 208–3676 (toll free), or (202) 502–8659 (TTY). In lieu of electronic filing, please send a paper copy to: Secretary, Federal Energy Regulatory Commission, 888 First Street NE., Washington, DC 20426. The first page of any filing should include docket number P–6764–038.

k. *Description of Request:* The licensee is proposing to delete a portion of the project transmission line that is no longer needed for interconnection of the project and change the point of interconnection with Manti City. The proposed changes are within the project boundary and will have no impact on federal lands.

l. *Locations of the Applications:* A copy of the application is available for inspection and reproduction at the Commission's Public Reference Room, located at 888 First Street NE., Room 2A, Washington, DC 20426, or by calling (202) 502–8371. The filing may also be viewed on the Commission's Web site at *http://www.ferc.gov/docs-filing/elibrary.asp.* Enter the docket number excluding the last three digits in the docket number field to access the document (*i.e.,* P–6764). You may also register online at *http://www.ferc.gov/docs-filing/esubscription.asp* to be notified via email of new filings and issuances related to this or other pending projects. For assistance, call 1–866–208–3676 or email *FERCOnlineSupport@ferc.gov,* for TTY, call (202) 502–8659.

m. Individuals desiring to be included on the Commission's mailing list should so indicate by writing to the Secretary of the Commission.

n. *Comments, Motions to Intervene or Protests:* Anyone may submit comments, a motion to intervene, or a protest in accordance with the requirements of Rules of Practice and Procedure, 18 CFR 385.210, .211, .214. In determining the appropriate action to

take, the Commission will consider all protests or other comments filed, but only those who file a motion to intervene in accordance with the Commission's Rules may become a party to the proceeding. Any comments, motions to intervene, or protests must be received on or before the specified comment date for the particular application.

o. *Filing and Service of Responsive Documents:* Any filing must (1) bear in all capital letters the title ''COMMENTS'', ''MOTION TO INTERVENE'', or ''PROTEST'' as applicable; (2) set forth in the heading the name of the applicant and the project number of the application to which the filing responds; (3) furnish the name, address, and telephone number of the person protesting or intervening; and (4) otherwise comply with the requirements of 18 CFR 385.2001 through 385.2005. All comments, motions to intervene, or protests must set forth their evidentiary basis and otherwise comply with the requirements of 18 CFR 4.34(b). All comments, motions to intervene, or protests should relate to project works which are the subject of the amendment request. Agencies may obtain copies of the application directly from the applicant. A copy of any protest or motion to intervene must be served upon each representative of the applicant specified in the particular application. If an intervener files comments or documents with the Commission relating to the merits of an issue that may affect the responsibilities of a particular resource agency, they must also serve a copy of the document on that resource agency. A copy of all other filings in reference to this application must be accompanied by proof of service on all persons listed in the service list prepared by the Commission in this proceeding, in accordance with 18 CFR 4.34(b) and 385.2010.

Dated: November 29, 2016.

Kimberly D. Bose,

Secretary.

[FR Doc. 2016–29225 Filed 12–5–16; 8:45 am]

BILLING CODE 6717–01–P

DEPARTMENT OF ENERGY

Federal Energy Regulatory Commission

[Docket No. CP16–357–000; Docket No. CP16–361–000]

Columbia Gas Transmission, LLC, Columbia Gulf Transmission, LLC; Notice of Revised Schedule for Environmental Review of the Mountaineer Xpress Project and the Gulf Xpress Project

This notice identifies the Federal Energy Regulatory Commission staff's revised schedule for the completion of the environmental impact statement (EIS) for Columbia Gas Transmission, LLC's Mountaineer XPress Project and Columbia Gulf Transmission, LLC's Gulf XPress Project. The first notice of schedule, issued on September 14, 2016, identified April 28, 2017 as the final EIS issuance date. However, due to recently filed re-routes and additional environmental information that required re-opening a scoping period, it was necessary for us to revise the published EIS schedule. Staff has now received all the information necessary to complete our review. As a result, staff has revised the schedule for issuance of the final EIS, based on a revised issuance of the draft EIS in February 2017.

Schedule for Environmental Review

Issuance of Notice of Availability of the final EIS: July 28, 2017.

90-day Federal Authorization Decision Deadline: October 26, 2017.

If another schedule change becomes necessary, an additional notice will be provided so that the relevant agencies are kept informed of the projects' progress.

Additional Information

In order to receive notification of the issuance of the EIS and to keep track of all formal issuances and submittals in specific dockets, the Commission offers a free service called eSubscription (*http://www.ferc.gov/docs-filing/esubscription.asp*).

Dated: November 29, 2016.

Kimberly D. Bose,

Secretary.

[FR Doc. 2016–29217 Filed 12–5–16; 8:45 am]

BILLING CODE 6717–01–P

DEPARTMENT OF ENERGY

Federal Energy Regulatory Commission

[Docket No. CP16–496–000]

Tennessee Gas Pipeline Company, L.L.C.; Notice of Public Scoping Session for the Proposed Lone Star Project and Request for Comments on Environmental Issues

The staff of the Federal Energy Regulatory Commission (FERC or Commission) will hold a public scoping session as part of their preparation of an environmental assessment (EA) in Edna, Texas to receive comments on the Lone Star Project involving construction and operation of facilities by Tennessee Gas Pipeline Company, L.L.C. (Tennessee) in San Patricio and Jackson Counties, Texas. The date, time, and location of the meeting is detailed in the table below.

FERC PUBLIC SCOPING SESSION, LONE STAR PROJECT

Date and time	Location
Tuesday, December 13, 2016, 5:00 p.m. to 10:00 p.m. [a]	Edna Elementary School, 400 Apollo Drive, Edna, TX 77957.

[a] FERC staff may conclude the session at 8:00 p.m. if all comments have been received. See session format below.

This notice is being sent to the Commission's current environmental mailing list for this project. State and local government representatives should notify their constituents of this proposed project and encourage them to comment on their areas of concern. More information about the Commission's EA and Tennessee's project is available in the *Notice of Intent to Prepare an Environmental Assessment for the Proposed Lone Star Project and Request for Comments on Environmental Issues* (NOI) issued on October 12, 2016. The NOI describes the scoping process that is under way seeking public participation in the environmental review of this project. Based on public concerns, this notice announces the continuation of the scoping process, initiated by the NOI, the Commission will use to gather input from the public and interested agencies on the project. The scoping period has been extended until December 21, 2016. The Commission invites you to attend the public scoping session.

The primary goal of the scoping session is to identify the specific environmental issues and concerns that should be considered and addressed in the EA. Commission staff will accept verbal comments between 5:00 p.m. and

10:00 p.m. You can make a difference by providing us with your specific comments or concerns about the project. Your comments should focus on the potential environmental effects, reasonable alternatives, and measures to avoid or lessen environmental impacts. Your input will help the Commission staff determine what issues they need to evaluate in the EA. To ensure that your comments are timely and properly recorded, please send your comments so that the Commission receives them in Washington, DC on or before December 21, 2016.

In addition to providing verbal comments at the public scoping session, you may submit comments in writing. It is important to note that verbal comments hold the same weight as written or electronically submitted comments.

If you submitted comments in response to the October 12, 2016 NOI, you do not need to re-submit those comments.

Session Format

There *will not* be a formal presentation by Commission staff when the session begins; however, Commission staff will be available to answer your questions about the environmental review process. Your comments will be recorded individually by a stenographer (with FERC staff or representative present) and placed into the Commission's administrative record. A transcript of the scoping session will be entered into the FERC's publicly available eLibrary (see below for instructions on using eLibrary). The session format is as follows:

- Tickets are handed out on a ''first come, first serve'' basis starting at 5:00 p.m. and ending promptly at 8:00 p.m.
- Comments will be taken until 10:00 p.m. However, if no additional numbers have been handed out and all individuals who wish to provide comments have had an opportunity to do so, staff may conclude the session at 8:00 p.m.
- Individuals are called in ticket number order to provide verbal comments to be transcribed by a court reporter for the public record.
- Time limits on verbal comments may be enforced to ensure that all those wishing to comment have the opportunity to do so within the designated session time.
- Written comments may be submitted in addition to, or in lieu of, verbal comments.
- Additional materials about FERC and the environmental review process are available at information stations at the session.

Session Conduct

Proper conduct will help the sessions maintain a respectful atmosphere for attendees to learn about the FERC Environmental Review Process and to be able to provide comments effectively.

- Loudspeakers, lighting, oversized visual aids, or other visual or audible disturbances are not permitted.
- Disruptive video and photographic equipment may not be used.
- Conversations should be kept to a reasonable volume. Attendees should be respectful of those providing verbal comments to the court reporters.
- Recorded interviews are not permitted within the session space.
- FERC reserves the right end the session if disruptions interfere with the opportunity for individuals to provide verbal comments or if there is a safety or security risk.

Additional Information

Additional information about the project is available from the Commission's Office of External Affairs, at (866) 208–FERC, or on the FERC Web site at *www.ferc.gov* using the ''eLibrary'' link. Click on the eLibrary link, click on ''General Search'' and enter the docket number, excluding the last three digits in the Docket Number field (*i.e.,* CP16–496). Be sure you have selected an appropriate date range. For assistance, please contact FERC Online Support at *FercOnlineSupport@ferc.gov* or toll free at (866) 208–3676, or for TTY, contact (202) 502–8659. The eLibrary link also provides access to the texts of formal documents issued by the Commission, such as orders, notices, and rulemakings.

Dated: November 28, 2016.

Kimberly D. Bose,

Secretary.

[FR Doc. 2016–29216 Filed 12–5–16; 8:45 am]

BILLING CODE 6717–01–P

ENVIRONMENTAL PROTECTION AGENCY

[EPA–HQ–OAR–2015–0827; FRL–9956–12–OAR]

Proposed Determination on the Appropriateness of the Model Year 2022–2025 Light-Duty Vehicle Greenhouse Gas Emissions Standards Under the Midterm Evaluation

AGENCY: Environmental Protection Agency (EPA).

ACTION: Notice of availability of a proposed order.

SUMMARY: On or about November 30, 2016, the Environmental Protection Agency (EPA) made available for public comment its proposed adjudicatory determination that the GHG standards currently in place for MY2022–2025 remain appropriate under the Clean Air Act and therefore should not be amended to be either more or less stringent. EPA made this Proposed Determination as part of its Midterm Evaluation of light-duty vehicle greenhouse gas (GHG) emissions standards for model years (MY) 2022–2025, as required under its regulations. The Proposed Determination follows a Draft Technical Assessment Report (TAR) issued jointly by EPA, the National Highway Traffic Safety Administration (NHTSA), and the California Air Resources Board (CARB) in July 2016. In the Draft TAR, the agencies examined a wide range of issues relevant to the appropriateness of the GHG emissions standards for MY2022–2025, and shared with the public its initial technical analyses of those issues. The Draft TAR was required by EPA's regulations as the first step in the Midterm Evaluation process. For the next step, the Proposed Determination, EPA has considered public comments submitted on the Draft TAR as well as other information, and has updated its analyses where appropriate. EPA will again consider public comments received on the Proposed Determination as it proceeds with the final step in the Midterm Evaluation, a Final Determination regarding the appropriateness of the MY2022–2025 standards.

DATES: Comments must be submitted on or before December 30, 2016. See the **ADDRESSES** and **SUPPLEMENTARY INFORMATION** section for more information about how to submit comments and where to find the Proposed Determination and related materials.

ADDRESSES: Submit your comments, identified by Docket ID No. EPA–HQ–OAR–2015–0827 to the Federal eRulemaking Portal: *http://www.regulations.gov.* Follow the online instructions for submitting comments. Once submitted, comments cannot be edited or withdrawn. The EPA may publish any comment received to its public docket. Do not submit electronically any information you consider to be Confidential Business Information (CBI) or other information whose disclosure is restricted by statute. Multimedia submissions (audio, video, etc.) must be accompanied by a written comment. The written comment is considered the official comment and should include discussion of all points you wish to make. The EPA will not

consider comments or comment contents located outside of the submission to the official dockets (*i.e.,* located elsewhere on the web, cloud, or in another file sharing system). For additional submission methods, the full EPA public comment policy, information about CBI or multimedia submissions, and general guidance on making effective comments, please visit *http://www2.epa.gov/dockets/commenting-epa-dockets.*

FOR FURTHER INFORMATION CONTACT: Christopher Lieske, Office of Transportation and Air Quality (OTAQ), Assessment and Standards Division (ASD), Environmental Protection Agency, 2000 Traverwood Drive, Ann Arbor, MI 48105; telephone number: (734) 214–4584; email address: *lieske.christopher@epa.gov,* fax number: 734–214–4816.

SUPPLEMENTARY INFORMATION:

Public Participation

The Proposed Determination and related materials are available in the public docket noted above and at *https://www.epa.gov/regulations-emissions-vehicles-and-engines/midterm-evaluation-light-duty-vehicle-ghg-emissions.* EPA requests comment on the Proposed Determination. This section describes how you can participate in this process.

1. How do I prepare and submit comments?

Direct your comments to Docket ID No. EPA–HQ–OAR–2015–0827. EPA's policy is that all comments received will be included in the public docket without change and may be made available online at *www.regulations.gov,* including any personal information provided, unless the comment includes information claimed to be Confidential Business Information (CBI) or other information whose disclosure is restricted by statute.

Do not submit information that you consider to be CBI or otherwise protected through *www.regulations.gov* or email. The *www.regulations.gov* Web site is an ''anonymous access'' system, which means EPA will not know your identity or contact information unless you provide it in the body of your comment. If you send an email comment directly to EPA without going through *www.regulations.gov,* your email address will be automatically captured and included as part of the comment that is placed in the public docket and made available on the Internet. If you submit an electronic comment, EPA recommends that you include your name and other contact information in the body of your comment and with any disk or CD–ROM you submit. If EPA cannot read your comment due to technical difficulties and cannot contact you for clarification, EPA may not be able to consider your comment. Electronic files should avoid the use of special characters, any form of encryption, and be free of any defects or viruses. For additional information about EPA's public docket visit the EPA Docket Center homepage at *http://www.epa.gov/epahome/dockets.htm.*

2. Tips for Preparing Your Comments

When submitting comments, remember to:

- Identify the action by docket number and other identifying information (subject heading, **Federal Register** date and page number);
- Explain why you agree or disagree, suggest alternatives, and substitute language for your requested changes;
- Describe any assumptions and provide any technical information and/or data that you used;
- If you estimate potential costs or burdens, explain how you arrived at your estimate in sufficient detail to allow for it to be reproduced;
- Provide specific examples to illustrate your concerns, and suggest alternatives;
- Explain your views as clearly as possible, avoiding the use of profanity or personal threats.

Make sure to submit your comments by the comment period deadline identified in the **DATES** section above.

3. How do I submit confidential business information?

Do not submit CBI to EPA through *http://www.regulations.gov* or email. Clearly mark the part or all of the information that you claim to be CBI. For CBI information in a disk or CD ROM that you mail to EPA, mark the outside of the disk or CD ROM as CBI and then identify electronically within the disk or CD ROM the specific information that is claimed as CBI. In addition to one complete version of the comment that includes information claimed as CBI, a copy of the comment that does not contain the information claimed as CBI must be submitted for inclusion in the public docket. Information so marked will not be disclosed except in accordance with procedures set forth in 40 CFR part 2.

In addition, you should submit a copy from which you have deleted the claimed confidential business information to the Docket by one of the methods set forth above.

4. How can I read the comments submitted by other people?

You may read the materials placed in the docket for this document (*e.g.,* the comments submitted in response to this document by other interested persons) at any time by going to *http://www.regulations.gov.* Follow the online instructions for accessing the dockets. You may also read the materials at the EPA Docket Center (details provided at *https://www.epa.gov/dockets/epa-docket-center-reading-room*).

You may read the materials placed in the docket for this document (*e.g.,* the comments submitted in response to this document by other interested persons) at any time by going to *http://www.regulations.gov.* Follow the online instructions for accessing the dockets. You may also read the materials at the EPA Docket Center (details provided at *https://www.epa.gov/dockets/epa-docket-center-reading-room*).

Dated: November 30, 2016.

Gina McCarthy,

Administrator.

[FR Doc. 2016–29255 Filed 12–5–16; 8:45 am]

BILLING CODE 6560–50–P

ENVIRONMENTAL PROTECTION AGENCY

[EPA–HQ–OW–2016–0150; FRL–9956–09–OW]

General Permit for Ocean Disposal of Marine Mammal Carcasses

AGENCY: Environmental Protection Agency (EPA).

ACTION: Notice of availability of final general permit.

SUMMARY: The Environmental Protection Agency (EPA) is issuing a general permit to authorize the transport of marine mammal carcasses from the United States and disposal of marine mammal carcasses in ocean waters. Permit authorization is available for any officer, employee, agent, department, agency, or instrumentality of federal, state, tribal, or local unit of government, as well as any Marine Mammal Health and Stranding Response Program (MMHSRP) Stranding Agreement Holder, and any Alaskan Native, who already may take a marine mammal under the Marine Mammal Protection Act (MMPA) and Endangered Species Act (ESA). The EPA's purpose in issuing a general permit is to expedite required authorizations for the ocean disposal of marine mammal carcasses that otherwise currently require the issuance of an emergency permit.

DATES: This general permit is effective January 5, 2017.

ADDRESSES: This permit is identified as Docket No. EPA–HQ–OW–2016–0150. The record is closed but available for inspection from 9 a.m. to 4 p.m., Monday through Friday, excluding legal holidays, at the Water Docket, 1301 Constitution Avenue NW., Room B–135, Washington, DC 20460. For access to docket materials, call 202–566–2426, to schedule an appointment.

FOR FURTHER INFORMATION CONTACT: Brian Rappoli, Ocean and Coastal Protection Division, Office of Water, 4504T, Environmental Protection Agency, 1200 Pennsylvania Avenue NW., Washington, DC 20460; telephone number: 202–566–1548; fax number: 202–566–1546; email address: *rappoli.brian@epa.gov.*

SUPPLEMENTARY INFORMATION:

I. General Information

A. Does this action apply to me?

The general permit authorization is available for any officer, employee, agent, department, agency, or instrumentality of federal, state, tribal, or local unit of government, as well as any MMHSRP Stranding Agreement Holder, and any Alaskan Native, who already may take a marine mammal under the MMPA and ESA, to transport from the United States and dispose of a marine mammal carcass in ocean waters.

B. Does this action require the disposal of marine mammal carcasses in ocean waters?

The general permit does not require ocean disposal; it merely authorizes ocean disposal when there is a need for such disposals.

II. Federal Law and International Conventions

The EPA establishes general terms of authorization under Title I of the Marine Protection, Research, and Sanctuaries Act (MPRSA), sometimes referred to as the Ocean Dumping Act, for the ocean disposal of the marine mammal carcasses. As defined under the MMPA, which is relevant for the purposes of this permit as explained later, the term ''marine mammal'' means any mammal that is morphologically adapted to the marine environment (including sea otters and members of the orders Sirenia, Pinnipedia, and Cetacea) or primarily inhabits the marine environment (*e.g.,* polar bears). Other than for Alaskan Natives who would engage in subsistence uses, EPA does not anticipate that ocean disposal will be necessary for marine mammal carcasses except in unusual circumstances, such as but not limited to (1) beached and floating whale or large pinniped carcasses and (2) mass strandings of other marine mammals.

Transportation for the purpose of disposal of any material in the ocean requires authorization under the MPRSA. In the past, the EPA has permitted the ocean disposal of cetacean (whales and related species) and pinniped (seals and related species) carcasses on a case-by-case basis, with emergency permits. The terms of this general permit are based on the EPA's past emergency permitting and will enable more timely authorization of such ocean disposals. The general permit applies to the transport of marine mammal carcasses from the United States for the purpose of ocean disposal.

Living marine mammals are protected by federal law, including the MMPA, the ESA, the Whaling Convention Act (WCA), the Fur Seal Act, and international conventions, including the International Convention for the Regulation of Whaling, which established the International Whaling Commission (IWC), and the Convention on International Trade in Endangered Species of Wild Fauna and Flora. Although the general permit applies only to marine mammal carcasses, certain IWC regulations are nevertheless relevant. Specifically, IWC regulations recognize that indigenous or aboriginal subsistence whaling is not the same as the commercial whaling that is subject to the IWC's whaling moratorium. As relevant to subsistence whaling in the United States, the IWC sets catch limits for the Western Arctic stock of bowhead whales based upon the needs of Native hunters in Alaskan villages. The hunt is managed cooperatively by the National Marine Fisheries Service (NMFS) and the Alaska Eskimo Whaling Commission under the WCA and the MMPA.

The Stranding Response Program of the NMFS and MMHSRP Stranding Agreement Holders are provided authority under this general permit because Stranding Agreement Holders are authorized to take marine mammals subject to the provisions of the MMPA (16 U.S.C. 1361 *et seq.*), the Regulations Governing the Taking and Importing of Marine Mammals (50 CFR part 216), the Endangered Species Act of 1973, as amended (16 U.S.C. 1531 *et seq.*), the Regulations Governing the Taking, Importing, and Exporting of Endangered and Threatened Fish and Wildlife (50 CFR parts 222–226), and/or the Fur Seal Act of 1966, as amended (16 U.S.C. 1151 *et seq.*). As such, MMHSRP Stranding Agreement Holders may have a need for ocean disposal should stranded marine mammals die.

III. Strandings and Beachings

Marine mammals that have died or have become sick or injured reach the ocean shoreline by a variety of mechanisms. Possible mechanisms include: Beaching, which involves a marine mammal carcass being driven ashore by currents or winds; stranding (single or multiple) of live marine mammal(s) that subsequently die; and transport on the bow of vessels. In most stranding cases, the causes of marine mammal strandings are unknown, but some causes may include: Disease, parasite infestation, harmful algal blooms, injuries due to ship strikes, fishery entanglements, pollution exposure, unusual weather or oceanographic events, trauma, and starvation. While many cetaceans and pinnipeds die every year, most carcasses never reach the shore; rather, the carcasses are consumed by other organisms or decompose sufficiently to sink to the ocean bottom where, depending upon size, the carcass may form the basis of an ''organic fall'' (*e.g.,* kelp, wood, and whale falls) ecosystem.

Stranding or beaching events may pose a risk to public health due to the potential for transfer to the public of communicable diseases (*e.g.,* brucellosis, poxvirus and mycobacteriosis) from cetacean or pinniped carcasses. Cetacean or pinniped carcasses present a significant disposal concern due not only to the size of some carcasses but also due to the frequency with which carcasses reach the shoreline. For example, between February 2010 and February 2014, over 1000 cetacean carcasses were found along the coast of the northern Gulf of Mexico.

IV. Hazard to Public Safety and Navigation

A floating carcass near shore may pose a risk to public safety before making land fall to the extent it might attract predators (*e.g.,* sharks) to a recreation use area in nearby waters. Floating carcasses near shore (*e.g.,* in a harbor) also may pose a hazard to navigation. Per regulations promulgated by the Army Corps of Engineers, at 33 CFR 245.20, the determination of a navigation hazard is made jointly by the Army Corps of Engineers and the U.S. Coast Guard (USCG). If such a determination is made, the Army Corps of Engineers determines appropriate remedial action as described in section 245.25, which may include removal of the carcass(es). Permit authorization to transport for the purpose of ocean

disposal will be available if the removal operation requires ocean disposal of such carcasses.

V. Disposal and Management Options

For a dead marine mammal found along the shore, generally available options for marine mammal carcass disposal and management include: Allowing the carcass to decompose in place; burial in place; transportation to a landfill; incineration; and towing to sea for ocean disposal. Additional disposal options, such as rendering, composting, and alkaline hydrolysis, will depend on the availability of appropriate facilities. Selection of an option will depend upon factors such as carcass size, number of carcasses, availability of local resources, and/or location. This general permit concerns only the towing to sea for ocean disposal option.

A. In-Place Decomposition

Allowing a carcass to decompose in place may be an acceptable option if the location of the carcass is on a remote portion of the shoreline that is sufficiently distant from population centers so that the carcass does not pose a risk for public health and animal health, or result in unacceptable olfactory or visual aesthetic impacts. This option may be the most practical when the carcass is located in an area that is inaccessible to heavy equipment, thereby making other options, such as burying in place or moving to a landfill, infeasible.

B. In-Place and Landfill Burial

Burial of a carcass may be used as a disposal option, especially when the carcass is located near population centers or near areas used for recreational activities. A carcass may be buried near where the animal strands or beaches, usually above the high water mark, or transported inland for disposal, for example, at a municipal landfill. Disposal by trench burial involves excavating a trough, placing the carcass in the trench, and covering the carcass with the excavated material. The burial disposal option depends on the availability of appropriate excavation equipment but may be limited by potential environmental damage (*e.g.,* destruction of dunes, beach grass, or nesting sites) caused by the transportation and operation of excavation equipment. While burial may be a cost-effective option for carcass disposal, it may not necessarily eliminate disease agents and disease transmission vectors that may be present, consequently posing a potential risk to human health and animal health.

C. Incineration

The incineration option for carcass disposal, which includes both open-air burning and fixed-facility incineration, offers an advantage in terms of pathogen destruction. However, due to the high water content of marine mammal carcasses, incineration costs may limit this option to small carcasses. While open-air burning of carcasses may yield a relatively benign ash, the amount of particulate matter and pyrogenic compounds released to the atmosphere by open-air burning may be significant and may require authorization (or may be prohibited) under state or local air pollution control laws. Additionally, the EPA presumes that open-air burning may require the use of hydrocarbon fuels, which could result in contamination of the underlying soil. Fixed-facility incinerators, which include small and large incineration facilities, crematoria, and power plant incinerators, offer the advantage of being regulated facilities that meet local and/or federal emission standards; however, the use of the fixed-facility option depends upon the transportability of the carcass.

D. Ocean Disposal

Sometimes, the only available carcass disposal option is towing to sea for ocean disposal. Ocean disposal may be appropriate after consideration and exhaustion of land-based alternatives, provided that an acceptable ocean dumping site can be identified, for example, where the release point is sufficiently far offshore that currents and winds are not expected to return the carcass to shore, and the carcass is not expected to pose a hazard to navigation. Positive buoyancy of the carcass may occur, depending on the time elapsed, due to the natural progression of the decomposition process. Consequently, appropriate carcass preparation (*e.g.,* attachment of weights) may be necessary if the carcass must be sunk, rather than released, at the ocean disposal site so that the carcass will not return to shore or pose a hazard to navigation.

VI. Potential Consequences of Marine Mammal Carcass Disposal in the Ocean

Most deep-sea benthic ecosystems are organic-carbon limited and, in many cases, are dependent upon organic matter from surface waters. A sunken carcass provides a large load of organic carbon to the sea floor. These local enrichments of the sea floor result in the establishment of specialized assemblages. Large organic falls occur naturally on the sea floor. Over 20 macro faunal species are known to exclusively inhabit the microenvironment formed by large organic falls and over 30 other macro faunal species are known to inhabit these sites.

The deep-sea benthic ecosystem response to whale falls has been the subject of scientific study and several stages of succession have been observed in the assemblages. The duration of these stages varies greatly with carcass size. The first stage is marked by the formation of bathyal scavenger assemblages that include hagfishes, sleeper sharks, crabs, and amphipods. During the second stage, sediments surrounding the carcass, which have become enriched with organic carbon, become colonized by high densities of worms (*e.g.,* Dorvilleidae, Chrysopetalidae). Once the consumption of soft tissue is complete, decomposition proceeds dominantly via anaerobic microbial digestion of bone lipids. The efflux of sulfides from the bones may, depending upon the size of the skeleton, provide for the formation of chemoautotrophic assemblages, which is the third stage of succession. These chemoautotrophic assemblages consist of organisms such as heterotrophic bacteria, mussels, snails, worms, limpets, and amphipods.

Considering the available scientific information on organic falls, the EPA finds that the potential effects of carcass disposal are minimal for the following reasons: (1) Except for happenstance, cetacean and pinniped carcasses would sink to the ocean floor rather than wash ashore; (2) the formation of an organic fall is a naturally occurring phenomenon with no known adverse environmental impacts; and (3) towing or other transportation of a carcass to sea for ocean disposal, when other disposal options are not viable, presents a minimal perturbation to a naturally occurring phenomenon.

The EPA's findings are consistent with the statutory considerations applicable to permit issuance under the MPRSA because: The general permit requires consideration of land-based alternatives; carcass disposal will not significantly affect human health, fisheries resources, or marine ecosystems; and carcass disposal will not result in permanent adverse effects.

VII. Regulatory Background

MPRSA Section 102(a)(1), 33 U.S.C. 1412(a)(1), requires a permit for any person to transport any material from the United States for the purpose of dumping into ocean waters; Section 102(a)(2) requires that agencies or instrumentalities of the United States

obtain a permit in order to transport any material from any location for the purpose of ocean dumping. MPRSA Section 104(c), 33 U.S.C. 1414(c), and the EPA regulations at 40 CFR 220.3(a) authorize the issuance of a general permit under the MPRSA for the dumping of materials which have a minimal adverse environmental impact and are generally disposed of in small quantities. The towing (or other transportation) of a marine mammal carcass by any person for disposal at sea constitutes transportation of material for the purpose of dumping in ocean waters, and thus is subject to the MPRSA. Because the material to be disposed will consist of the carcass or carcasses, there will be no materials present that are prohibited by 40 CFR 227.5.

VIII. Consideration of Alaskan Natives Engaged in Subsistence Uses

The general permit includes specific considerations that apply to Alaskan Native persons engaged in subsistence uses. For purposes of this general permit, EPA intends the term ''Alaskan Native'' to be based on the statutory term defined at 16 U.S.C. 1371(b) that refers to ''any Indian, Aleut, or Eskimo who resides in Alaska and who dwells on the coast of the North Pacific Ocean or the Arctic Ocean'' who takes a marine mammal for subsistence purposes or for purposes of creating and selling authentic native articles of handicrafts and clothing and provided such taking is not in a wasteful manner.

The general permit authorizes ocean disposal of marine mammal carcasses by an Alaskan Native engaged in subsistence uses for two reasons. First, marine mammals are comparatively abundant and widely distributed throughout coastal Alaska, and Alaskan Natives depend upon these natural resources for many customary and traditional uses. Collectively, these customary and traditional uses (*e.g.,* food, clothing) are referred to as ''subsistence uses.'' Alaskan Native subsistence uses of marine mammals have been ongoing for thousands of years. More recently, the United States has recognized the importance of subsistence uses of marine mammals by Alaskan Natives through enactment of the MMPA, which expressly exempts Alaskan Natives engaged in subsistence uses from the general prohibition on ''taking'' marine mammals under certain circumstances (16 U.S.C. 1371(b)). The MPRSA, by comparison, does not include a similar exemption for the transport and disposal in ocean waters by Alaskan Natives when marine mammal carcasses (or parts thereof) have no further use for subsistence purposes. The general permit accommodates the absence of a similar exemption by facilitating authorization of ocean disposal of marine mammals by Alaskan Natives.

Second, many coastal communities of Alaskan Natives engaged in subsistence uses are in remote locations and thus face a time-critical public safety issue, for example, when a marine mammal carcass washes ashore near a village or town, or a marine mammal is harvested or salvaged and the carcass is hauled ashore near a village or town. Such carcasses may attract bears or other scavenger animals, which may increase the risk of human injury or mortality. For these reasons, it would be prudent to expedite the removal and, if necessary, ocean disposal of such carcasses as soon as practical.

With these considerations in mind, EPA's intent in developing the Alaskan Native-specific permit conditions (see Section B) is, to the maximum extent allowable, to avoid unnecessary interference with long-standing subsistence uses and traditional cultural practices, and to recognize the unique circumstances faced by Alaskan Natives engaged in subsistence uses. In issuing this general permit, the EPA does not intend to change, alter or otherwise affect subsistence uses of marine mammals by Alaskan Natives engaged in subsistence uses. Section B sets forth requirements designed to address these considerations while also complying with the MPRSA and the EPA's accompanying regulations at 40 CFR Subchapter H. The primary differences between Sections A and B relate to federal agency concurrence, distance from land requirements for ocean disposal, and reporting requirements.

To further clarify, the general permit does not in any way *require* ocean disposal of marine mammal carcasses; it merely authorizes ocean disposal of marine mammal carcasses when there is a need for such disposals. Additionally, the general permit is not intended to and does not regulate: Any subsistence activities of Alaskan Natives, including hunting, harvesting, salvaging, hauling, dressing, butchering, distribution and consumption of marine mammals (or any other species used for subsistence purposes); the transportation and dumping of marine mammal carcasses on land, such as in whale boneyards or in inland waters (*i.e.,* waters that are landward of the baseline of the territorial sea, such as rivers, lakes and certain enclosed bays or harbors); or leaving marine mammal carcasses to decompose in place on sea ice (or in a hole or lead in the sea ice), where there is no transportation by vessel or other vehicle for the purpose of ocean disposal. The purpose of this general permit is to expedite required authorizations that EPA otherwise currently manages through the issuance of an emergency permit for the ocean disposal of marine mammal carcasses.

IX. Discussion

Considering the information presented in the previous section, the EPA determines that the potential adverse environmental impacts of marine mammal carcass disposal at sea are minimal and that marine mammal carcasses often must be disposed of in emergency situations to mitigate threats to public safety (*e.g.,* recreational uses in nearby waters) as well as risks of navigation hazards. As such, issuance of a general permit is appropriate under the MPRSA.

Authorization under Section A of the general permit is available to federal, state, and local government officials and employees acting in the course of official duties and to MMHSRP Stranding Agreement Holders. Section A authorizes such persons to transport and dispose of marine mammal carcasses in ocean waters. Section A requires that each such general permittee consult with the MMHSRP of NMFS—and recommends that each such general permittee consults with the applicable USCG District Office—prior to initiating any ocean disposal activities with respect to a marine mammal carcass. General permittees authorized under Section A must consult with and obtain concurrence from the applicable EPA Regional Office on selection of a disposal site, which must be seaward of the three mile territorial sea lines demarcated on nautical charts, and submit a report to the applicable EPA Regional Office on the ocean disposal activities.

Alaskan Natives engaged in subsistence uses are not required to, but may, transport and dispose of marine mammal carcasses in ocean waters. When disposal in ocean waters is the selected disposal approach, Section B of the general permit authorizes any Alaskan Native engaged in subsistence uses to transport and dispose of a marine mammal carcass in ocean waters. Under Section B, the Alaskan Native general permittee selects an ocean disposal site sufficiently far offshore so that currents and winds are not expected to return the carcass to shore and the carcass is not expected to pose a hazard to navigation and afterwards submits an annual report to EPA Region 10 on ocean disposal activities conducted in the prior

calendar year. Section B does not require a statement of need for selecting ocean disposal nor does it specify a distance requirement. The State of Alaska has waived certification under Clean Water Act Section 401 for the Section B authorization.

X. Response to Comments Received

The EPA received seven comments during the public comment period. The EPA agrees with several of the recommendations received via the public comment process. As a consequence, the EPA has made several changes to the general permit.

In response to comments, the EPA added language to the General Information section to clarify that the general permit does not require ocean disposal of marine mammal carcasses. In addition, the EPA revised the requirements of Section A(2) regarding concurrence on the ocean disposal site. Because the presence of a marine mammal carcass near human habitation or recreation areas may pose a time-critical public safety issue, the requirement to obtain concurrences from multiple agencies might unnecessarily delay the disposal. In response to comments and in order to expedite ocean disposals in time-critical public safety situations, the general permittee authorized under Section A need only obtain concurrences from the appropriate EPA Regional Office and such concurrence may initially be provided via telephone. Finally, the EPA revised the reporting requirements of Section B applicable to Alaskan Natives engaged in subsistence uses. Under revisions to Section B, an Alaskan Native permittee may provide reports to EPA Region 10 on an annual basis. The EPA's intention regarding annual reporting for Section B permittees is to mitigate any potential burden on Alaskan Natives engaged in subsistence uses who may dispose of marine mammal carcasses in the ocean.

XI. Statutory and Executive Order Reviews

A. Paperwork Reduction Act

The information collections under this general permit are covered under the MPRSA Information Collection Request (ICR) that has been submitted for approval to the Office of Management and Budget (OMB) under the Paperwork Reduction Act. The ICR document that the EPA prepared for all of MPRSA activities has been assigned EPA ICR number 0824.06.

Section 104(e) of the MPRSA authorizes the EPA to collect information to ensure that ocean dumping is appropriately regulated and will not harm human health or the marine environment, based on applying the Ocean Dumping Criteria. To meet United States' reporting obligation under the London Convention, the EPA also reports some of this information in the annual United States Ocean Dumping Report, which is sent to the International Maritime Organization.

Respondents/affected entities: Any officer, employee, agent, department, agency, or instrumentality of federal, state, tribal, or local unit of government, as well as any MMHSRP Stranding Agreement Holder, and any Alaskan Native engaged in subsistence uses who disposes of a marine mammal carcass in ocean waters will be affected by the general permit. Under this general permit, respondents do not need to request permit authorization because the general permit already authorizes ocean disposal of a marine mammal carcass by an eligible person.

Respondent's obligation to respond: Pursuant to 40 CFR 221.1–221.2, the EPA requires all ocean dumping permittees to supply specified reporting information.

B. Executive Order 13175: Consultation and Coordination With Indian Tribal Governments

This action has tribal implications. However, the general permit will neither impose substantial direct compliance costs on federally recognized tribal governments, nor preempt tribal law. The general permit has tribal implications because it may affect traditional practices of some tribes.

Dated: November 23, 2016.

Marcus Zobrist,

Acting Director, Oceans and Coastal Protection Division, Office of Wetlands, Oceans and Watersheds, Office of Water, Environmental Protection Agency.

General Permit for Ocean Disposal of Marine Mammal Carcasses

A. General Requirements for Governmental Entities and Stranding Agreement Holders

Except as provided in Section B below, any officer, employee, agent, department, agency, or instrumentality of federal, state, tribal, or local unit of government, and any MMHSRP Stranding Agreement Holder, is hereby granted a general permit to transport and dispose of marine mammal carcasses in ocean waters subject to the following conditions:

1. The permittee shall consult with the MMHSRP of NMFS prior to initiating any disposal activities. A fact sheet containing points of contact at MMHSRP is available at *http://www.epa.gov/ocean-dumping/ocean-disposal-marine-mammal-carcasses*.

2. A disposal site must be seaward of the three mile territorial sea demarcated on nautical charts. The permittee shall consult with and obtain written concurrence (via email or letter) from the applicable EPA Regional Office on ocean disposal site selection. Because the presence of a marine mammal carcass near human habitation or recreation areas may pose a time-critical public safety issue, the permittee may obtain concurrence via telephone from the applicable EPA Regional Office provided that the permittee subsequently obtains written concurrence (via email or letter). A fact sheet containing points of contact at EPA is available at *http://www.epa.gov/ocean-dumping/ocean-disposal-marine-mammal-carcasses*.

3. If a determination is made that the carcass must be sunk, rather than released at the disposal site, the transportation and disposal of materials necessary to ensure the sinking of the carcass are also authorized for ocean dumping under this general permit. When materials are to be used to sink the carcass, the permittee must first consult with and obtain written concurrence (via email or letter) from the applicable EPA Regional Office on the selection of materials. Any materials described in 40 CFR 227.5 (prohibited materials) or 40 CFR 227.6 (constituents prohibited as other than trace amounts) shall not be used. The transportation and dumping of any materials other than the materials necessary to ensure the sinking of the carcass are not authorized under this general permit and constitute a violation of the MPRSA. Because the presence of a marine mammal carcass near human habitation or recreation areas may pose a time-critical public safety issue, the permittee may obtain concurrence via telephone from the applicable EPA Regional Office provided that the permittee subsequently obtains written concurrence (via email or letter).

4. The permittee shall submit a report on the ocean disposal activities authorized by this general permit to the applicable EPA Regional Office within 30 days after carcass disposal. This report shall include:

a. A description of the carcass(es) disposed;

b. The date and time of the disposal as well as the latitude and longitude of the disposal site. Latitude and longitude of the disposal site shall be reported at the highest degree of accuracy available on board the vessel or vehicle that

transported the carcass (*e.g.,* onboard geographic position system technology);

c. The name, title, affiliation, and contact information of the person in charge of the disposal operation and the person in charge of the vessel or vehicle that transported the carcass (if different than the person in charge of the disposal);

d. A statement of need and rationale for selecting ocean disposal rather than other disposal options; and

5. The permittee shall immediately notify EPA of any violation of any condition of this general permit.

B. Requirements for any Alaskan Native Engaged in Subsistence Uses

Notwithstanding Section A, any Alaskan Native engaged in subsistence uses is hereby granted a general permit to transport and dispose of marine mammal carcasses in ocean waters subject to the following conditions:

1. The permittee shall submit a report (via email or letter) on all disposal activities authorized by this general permit that the permittee has conducted in the prior calendar year. Reports shall be submitted to EPA Region 10 within 30 days of the end of the calendar year. A fact sheet containing contact information for EPA Region 10 is available at *http://www.epa.gov/ocean-dumping/ocean-disposal-marine-mammal-carcasses.* This report shall include:

a. The number and type of carcasses disposed;

b. A description of the general vicinity in which the carcasses were disposed; and

c. The name and contact information of the permittee.

2. Where ocean disposal is the selected approach, marine mammal carcasses must be towed or otherwise transported to a site offshore where, based on available information, which may include local or traditional knowledge, currents and winds are not expected to return the carcass to shore and the carcass is not expected to pose a hazard to navigation.

[FR Doc. 2016–29250 Filed 12–5–16; 8:45 am]

BILLING CODE 6560–50–P

ENVIRONMENTAL PROTECTION AGENCY

[EPA–HQ–OAR–2015–0072; FRL–9955–78–OAR]

Release of the Final Integrated Review Plan for the National Ambient Air Quality Standards for Particulate Matter

AGENCY: Environmental Protection Agency (EPA).

ACTION: Notice of availability.

SUMMARY: The Environmental Protection Agency (EPA) is announcing the availability of the final document titled *Integrated Review Plan for the National Ambient Air Quality Standards for Particulate Matter* (IRP). The IRP presents the planned approach and anticipated schedule for the review of the air quality criteria for particulate matter (PM) and the primary and secondary national ambient air quality standards (NAAQS) for PM. The primary and secondary NAAQS for PM are set to protect the public health and public welfare, respectively, from exposures to PM in ambient air.

DATES: The IRP will be available on or about December 5, 2016.

ADDRESSES: The IRP will be available primarily via the Internet at *https://www3.epa.gov/ttn/naaqs/standards/pm/s_pm_2014_pd.html.*

FOR FURTHER INFORMATION CONTACT: Dr. Scott Jenkins, Office of Air Quality Planning and Standards (Mail code C504–06), U.S. Environmental Protection Agency, Research Triangle Park, NC 27711; telephone number: 919–541–1167; email: *jenkins.scott@epa.gov.*

SUPPLEMENTARY INFORMATION: Two sections of the Clean Air Act (CAA) govern the establishment and revision of the NAAQS. Section 108 (42 U.S.C. 7408) directs the Administrator to identify and list certain air pollutants and then to issue air quality criteria for those pollutants. The Administrator is to list those air pollutants that in his or her ''judgment, cause or contribute to air pollution which may reasonably be anticipated to endanger public health or welfare;'' ''the presence of which in the ambient air results from numerous or diverse mobile or stationary sources;'' and ''for which . . . [the Administrator] plans to issue air quality criteria . . .'' Air quality criteria are intended to ''accurately reflect the latest scientific knowledge useful in indicating the kind and extent of all identifiable effects on public health or welfare which may be expected from the presence of [a] pollutant in the ambient air . . .'' (42 U.S.C. 7408(b)). Under section 109 (42 U.S.C. 7409), the EPA establishes primary (health-based) and secondary (welfare-based) NAAQS for pollutants for which air quality criteria are issued. Section 109(d) requires periodic review and, if appropriate, revision of existing air quality criteria. Revised air quality criteria reflect advances in scientific knowledge on the effects of the pollutant on public health or welfare. The EPA is also required to periodically review and, if appropriate, revise the NAAQS based on the revised criteria. Section 109(d)(2) requires that an independent scientific review committee ''shall complete a review of the criteria . . . and the national primary and secondary ambient air quality standards . . . and shall recommend to the Administrator any new . . . standards and revisions of the existing criteria and standards as may be appropriate . . . .'' Since the early 1980s, this independent review function has been performed by the Clean Air Scientific Advisory Committee (CASAC).

Presently, the EPA is reviewing the criteria and the primary and secondary NAAQS for PM.[1] The IRP being announced today has been developed as part of the planning phase for the review. This phase began with a science policy workshop to identify issues and questions to frame the review.[2] Drawing from the workshop discussions, a draft IRP was prepared jointly by the EPA's National Center for Environmental Assessment, within the Office of Research and Development, and the EPA's Office of Air Quality Planning and Standards, within the Office of Air and Radiation. The draft IRP presented the anticipated plan and schedule for the entire review, the process for conducting the review, and the key policy-relevant science issues that will guide the review. The draft IRP was reviewed by the CASAC at a teleconference on May 23, 2016. The CASAC's advice on the draft IRP was conveyed in a letter to the Administrator dated August 31, 2016.[3] The final IRP being released at this time reflects consideration of the CASAC's advice and public comments received on the draft IRP.

[1] The EPA's call for information for this review was issued on December 3, 2014 (79 FR 71764).

[2] The EPA held a workshop titled ''Workshop to Discuss Policy-Relevant Science to Inform EPA's Review of the Primary and Secondary NAAQS for PM'' on February 9–11, 2015 (79 FR 71764).

[3] Available at: *https://yosemite.epa.gov/sab/sabproduct.nsf/4620a620d0120f93852572410080d786/9920C7E70022CCF98525802000702022/$File/EPA-CASAC+2016-003+unsigned.pdf.*

Dated: December 1, 2016.

Stephen Page,

Director, Office of Air Quality Planning and Standards.

[FR Doc. 2016–29231 Filed 12–5–16; 8:45 am]

BILLING CODE 6560–50–P

ENVIRONMENTAL PROTECTION AGENCY

[EPA–HQ–OPPT–2013–0677; FRL–9955–43]

Receipt of Information Under the Toxic Substances Control Act

AGENCY: Environmental Protection Agency (EPA).

ACTION: Notice.

SUMMARY: EPA is announcing its receipt of information submitted pursuant to a rule, order, or consent agreement issued under the Toxic Substances Control Act (TSCA). As required by TSCA, this document identifies each chemical substance and/or mixture for which information has been received; the uses or intended uses of such chemical substance and/or mixture; and describes the nature of the information received. Each chemical substance and/or mixture related to this announcement is identified in Unit I. under **SUPPLEMENTARY INFORMATION.**

FOR FURTHER INFORMATION CONTACT: *For technical information contact:* John Schaeffer, Chemical Control Division (7405M), Office of Pollution Prevention and Toxics, Environmental Protection Agency, 1200 Pennsylvania Ave. NW., Washington, DC 20460–0001; telephone number: (202) 564–8173; email address: *schaeffer.john@epa.gov.*

For general information contact: The TSCA-Hotline, ABVI-Goodwill, 422 South Clinton Ave., Rochester, NY 14620; telephone number: (202) 554–1404; email address: *TSCA-Hotline@epa.gov.*

SUPPLEMENTARY INFORMATION:

I. Chemical Substances and/or Mixtures

Information received about the following chemical substance(s) and/or mixture(s) is identified in Unit IV.: *1,3-Propanediol, 2,2-bis[(nitrooxy)methyl]-, dinitrate (ester)* (*CASRN 78–11–5*).

II. Authority

Section 4(d) of TSCA (15 U.S.C. 2603(d)) requires EPA to publish a notice in the **Federal Register** reporting the receipt of information submitted pursuant to a rule, order, or consent agreement promulgated under TSCA section 4 (15 U.S.C. 2603).

III. Docket Information

A docket, identified by the docket identification (ID) number EPA–HQ–OPPT–2013–0677, has been established for this **Federal Register** document, which announces the receipt of the information. Upon EPA's completion of its quality assurance review, the information received will be added to the docket identified in Unit IV., which represents the docket used for the TSCA section 4 rule, order, and/or consent agreement. In addition, once completed, EPA reviews of the information received will be added to the same docket. Use the docket ID number provided in Unit IV. to access the information received and any available EPA review.

EPA's dockets are available electronically at *http://www.regulations.gov* or in person at the Office of Pollution Prevention and Toxics Docket (OPPT Docket), Environmental Protection Agency Docket Center (EPA/DC), West William Jefferson Clinton Bldg., Rm. 3334, 1301 Constitution Ave. NW., Washington, DC. The Public Reading Room is open from 8:30 a.m. to 4:30 p.m., Monday through Friday, excluding legal holidays. The telephone number for the Public Reading Room is (202) 566–1744, and the telephone number for the OPPT Docket is (202) 566–0280. Please review the visitor instructions and additional information about the docket available at *http://www.epa.gov/dockets.*

IV. Information Received

As specified by TSCA section 4(d), this unit identifies the information received by EPA.

1,3-Propanediol, 2,2-bis[(nitrooxy)methyl]-, dinitrate (ester) (CASRN 78–11–5)

1. *Chemical Use(s): 1,3-Propanediol, 2,2-bis[(nitrooxy)methyl]-, dinitrate (ester)* is used in manufacturing demolition explosives and blasting caps.

2. *Applicable Rule, Order, or Consent Agreement:* Chemical testing requirements for second group of high production volume chemicals (HPV2), 40 CFR 799.5087.

3. *Applicable docket ID number:* The information received will be added to docket ID number EPA–HQ–OPPT–2007–0531.

4. *Information Received:* EPA received the following information:

a. Acute Toxicity to Daphnia.

b. Acute Toxicity to Fish.

Authority: 15 U.S.C. 2601 *et seq.*

Dated: November 29, 2016.

Maria J. Doa,

Director, Chemical Control Division, Office of Pollution Prevention and Toxics.

[FR Doc. 2016–29254 Filed 12–5–16; 8:45 am]

BILLING CODE 6560–50–P

ENVIRONMENTAL PROTECTION AGENCY

[EPA 2016–09; FRL 9955–93–Region 9]

Proposed Agreement and Order on Consent for Certain CERCLA Response Activities by Tenant as Bona Fide Prospective Purchaser

AGENCY: Environmental Protection Agency (EPA).

ACTION: Notice; request for public comment.

SUMMARY: In accordance with section 122(i) of the Comprehensive Environmental Response, Compensation and Liability Act of 1980, as amended (CERCLA), 42 U.S.C. 9622(i), notice is hereby given of a proposed settlement, embodied in an Agreement and Order on Consent (Agreement), between the United States on behalf of the Environmental Protection Agency (EPA) and Planetary Ventures, LLC (PV), a Delaware Limited liability company. PV represents that, as a lessee from the National Aeronautics and Space Administration (NASA) of the Moffett Field Leasehold within the former NAS Moffett Field Superfund site in Santa Clara County, California, it is a bona fide prospective purchaser, as described by CERCLA section 101(40), 42 U.S.C. 9601(40) and through the Agreement would maintain that status. Under the Agreement, PV agrees to perform a pilot study for evaluating alternatives for abating contaminants in the coating and paint in the superstructure of Hangar One, and, if selected by NASA, to conduct a non-time critical removal action at Hangar One. The Agreement also requires PV to pay EPA oversight costs for this work, and includes a covenant not to sue PV pursuant to sections 106 or 107(a) of CERCLA, 42 U.S.C. 9606 or 9607(a).

DATES: Written comments must be received on or before January 5, 2017. For thirty (30) days following the date of publication of this notice, EPA will consider all comments received on this agreement and may modify or withdraw its consent to the agreement if comments received disclose facts or considerations that indicate that the settlement is inappropriate, improper, or inadequate.

ADDRESSES: EPA's response to any comments and the proposed agreement

are available for public inspection at the EPA Region IX, Regional Records Center, 75 Hawthorne Street, San Francisco, CA 94105, 415–947–8717. A copy of the proposed agreement may be obtained from Judy Huang, EPA Region IX, 75 Hawthorne Street, SFD–8–3, San Francisco, CA, 94105, telephone number 415–972–3914. Comments should reference Docket ID Number EPA 2016–09 and should be addressed to Ms. Huang at the above address or electronically to *huang.judy@epa.gov.*

FOR FURTHER INFORMATION CONTACT: Bethany Dreyfus, Assistant Regional Counsel (ORC–3), Office of Regional Counsel, U.S. EPA Region IX, 75 Hawthorne Street, San Francisco, CA 94105; Email: *dreyfus.bethany@epa.gov;* Phone (415) 972–3886.

Dated: November 21, 2016.

Enrique Manzanilla,

Director, Superfund Division, EPA Region 9.

[FR Doc. 2016–29240 Filed 12–5–16; 8:45 am]

BILLING CODE 6560–50–P

FEDERAL COMMUNICATIONS COMMISSION

Federal Advisory Committee Act; Communications Security, Reliability, and Interoperability Council

AGENCY: Federal Communications Commission.

ACTION: Notice of public meeting.

SUMMARY: In accordance with the Federal Advisory Committee Act, this notice advises interested persons that the Federal Communications Commission's (FCC or Commission) Communications Security, Reliability, and Interoperability Council (CSRIC) V will hold its seventh meeting.

DATES: December 21, 2016.

ADDRESSES: Federal Communications Commission, Room TW–C305 (Commission Meeting Room), 445 12th Street SW., Washington, DC 20554.

FOR FURTHER INFORMATION CONTACT: Jeffery Goldthorp, Designated Federal Officer, (202) 418–1096 (voice) or *jeffery.goldthorp@fcc.gov* (email); or Suzon Cameron, Deputy Designated Federal Officer, (202) 418–1916 (voice) or *suzon.cameron@fcc.gov* (email).

SUPPLEMENTARY INFORMATION: The meeting will be held on December 21, 2016, from 1:00 p.m. to 5:00 p.m. in the Commission Meeting Room of the Federal Communications Commission, Room TW–C305, 445 12th Street SW., Washington, DC 20554.

The CSRIC is a Federal Advisory Committee that will provide recommendations to the FCC regarding best practices and actions the FCC can take to help ensure the security, reliability, and interoperability of communications systems. On March 19, 2015, the FCC, pursuant to the Federal Advisory Committee Act, renewed the charter for the CSRIC for a period of two years through March 18, 2017. The meeting on December 21, 2016, will be the seventh meeting of the CSRIC under the current charter. The FCC will attempt to accommodate as many attendees as possible; however, admittance will be limited to seating availability. The Commission will provide audio and/or video coverage of the meeting over the Internet from the FCC's Web page at *http://www.fcc.gov/live*. The public may submit written comments before the meeting to Jeffery Goldthorp, CSRIC Designated Federal Officer, by email to *jeffery.goldthorp@fcc.gov* or U.S. Postal Service Mail to Jeffery Goldthorp, Associate Bureau Chief, Public Safety and Homeland Security Bureau, Federal Communications Commission, 445 12th Street, SW., Room 7–A325, Washington, DC 20554.

Open captioning will be provided for this event. Other reasonable accommodations for people with disabilities are available upon request. Requests for such accommodations should be submitted via email to *fcc504@fcc.gov* or by calling the Consumer & Governmental Affairs Bureau at (202) 418–0530 (voice), (202) 418–0432 (tty). Such requests should include a detailed description of the accommodation needed. In addition, please include a way the FCC can contact you if it needs more information. Please allow at least five days' advance notice; last- minute requests will be accepted, but may be impossible to fill.

Federal Communications Commission.

Marlene H. Dortch,

Secretary.

[FR Doc. 2016–29158 Filed 12–5–16; 8:45 am]

BILLING CODE 6712–01–P

FEDERAL RESERVE SYSTEM

Formations of, Acquisitions by, and Mergers of Bank Holding Companies

The companies listed in this notice have applied to the Board for approval, pursuant to the Bank Holding Company Act of 1956 (12 U.S.C. 1841 *et seq.*) (BHC Act), Regulation Y (12 CFR part 225), and all other applicable statutes and regulations to become a bank holding company and/or to acquire the assets or the ownership of, control of, or the power to vote shares of a bank or bank holding company and all of the banks and nonbanking companies owned by the bank holding company, including the companies listed below.

The applications listed below, as well as other related filings required by the Board, are available for immediate inspection at the Federal Reserve Bank indicated. The applications will also be available for inspection at the offices of the Board of Governors. Interested persons may express their views in writing on the standards enumerated in the BHC Act (12 U.S.C. 1842(c)). If the proposal also involves the acquisition of a nonbanking company, the review also includes whether the acquisition of the nonbanking company complies with the standards in section 4 of the BHC Act (12 U.S.C. 1843). Unless otherwise noted, nonbanking activities will be conducted throughout the United States.

Unless otherwise noted, comments regarding each of these applications must be received at the Reserve Bank indicated or the offices of the Board of Governors not later than December 21, 2016.

A. Federal Reserve Bank of Dallas (Robert L. Triplett III, Senior Vice President) 2200 North Pearl Street, Dallas, Texas 75201–2272:

1. *Woodforest Financial Group Employee Stock Ownership Plan and Woodforest Financial Group Employee Stock Ownership Trust,* both in The Woodlands, Texas; to acquire up to 32.26 percent of Woodforest Financial Group, Inc., The Woodlands, Texas, and thereby indirectly acquire Woodforest National Bank, Houston, Texas.

Board of Governors of the Federal Reserve System, December 1, 2016.

Yao-Chin Chao,

Assistant Secretary of the Board.

[FR Doc. 2016–29194 Filed 12–5–16; 8:45 am]

BILLING CODE 6210–01–P

FEDERAL RESERVE SYSTEM

Change in Bank Control Notices; Acquisitions of Shares of a Bank or Bank Holding Company

The notificants listed below have applied under the Change in Bank Control Act (12 U.S.C. 1817(j)) and § 225.41 of the Board's Regulation Y (12 CFR 225.41) to acquire shares of a bank or bank holding company. The factors that are considered in acting on the notices are set forth in paragraph 7 of the Act (12 U.S.C. 1817(j)(7)).

The notices are available for immediate inspection at the Federal Reserve Bank indicated. The notices

also will be available for inspection at the offices of the Board of Governors. Interested persons may express their views in writing to the Reserve Bank indicated for that notice or to the offices of the Board of Governors. Comments must be received not later than December 21, 2016.

A. Federal Reserve Bank of Chicago (Colette A. Fried, Assistant Vice President) 230 South LaSalle Street, Chicago, Illinois 60690–1414:

1. *Patricia Jurgens and Michael Aikman,* both of Arthur, Illinois, and *Gale Winningham,* Hillsborough, California; to retain voting shares of Arthur Bancshares, Inc., and indirectly retain shares of State Bank of Arthur, both in Arthur, Illinois, and thereby join the existing Jurgens Winningham Family Control Group previously approved to control 25 percent or more of the voting shares of Arthur Bancshares, Inc.

Board of Governors of the Federal Reserve System, December 1, 2016.

Yao-Chin Chao,

Assistant Secretary of the Board.

[FR Doc. 2016–29193 Filed 12–5–16; 8:45 am]

BILLING CODE 6210–01–P

FEDERAL TRADE COMMISSION

Agency Information Collection Activities; Proposed Collection; Comment Request

AGENCY: Federal Trade Commission (''FTC'' or ''Commission'').

ACTION: Notice.

SUMMARY: The FTC intends to conduct a survey of consumers to advance its understanding of the prevalence of consumer fraud and to allow the FTC to better serve people who experience fraud. The survey will be a follow-up to three previous surveys, the most recent of which was conducted between November 2011 and February 2012. Before gathering this information, the FTC is seeking public comments on its proposed consumer research. The information collection requirements described below are being submitted to the Office of Management and Budget (''OMB'') for review, as required by the Paperwork Reduction Act (''PRA'').

DATES: Comments on the proposed information requests must be received on or before January 5, 2017.

ADDRESSES: Interested parties may file a comment online or on paper, by following the instructions in the Request for Comment part of the **SUPPLEMENTARY INFORMATION** section below. Write: ''Consumer Fraud Survey 2016: Paperwork Comment, FTC File No. P105502'' on your comment and file the comment online at *https://ftcpublic.commentworks.com/ftc/fraudsurvey2016* by following the instructions on the web-based form. If you prefer to file your comment on paper, mail your comment to the following address: Federal Trade Commission, Office of the Secretary, 600 Pennsylvania Avenue NW., Suite CC–5610 (Annex J), Washington, DC 20580, or deliver your comment to the following address: Federal Trade Commission, Office of the Secretary, Constitution Center, 400 7th Street SW., 5th Floor Suite 5610 (Annex J), Washington, DC 20024.

FOR FURTHER INFORMATION CONTACT: Requests for additional information should be addressed to Keith B. Anderson, Economist, Bureau of Economics, Federal Trade Commission, 600 Pennsylvania Avenue NW., Mail Stop H–238, Washington, DC 20580, Telephone (202) 326–3428.

SUPPLEMENTARY INFORMATION:

Background: On March 31, 2016, the FTC sought comment on the information collection requirements associated with the proposed Fraud Survey (81 FR 18628). Three comments were received.[1] Pursuant to the OMB regulations, 5 CFR part 1320, that implement the PRA, 44 U.S.C. 3501–3521, the Commission is providing this second opportunity for public comment. All comments should be filed as prescribed in the **ADDRESSES** section above, and must be received on or before January 5, 2017.

As part of its consumer protection mission, the FTC has brought hundreds of cases targeting perpetrators of consumer fraud and has committed significant resources to educational initiatives designed to protect consumers against such fraud. In order to ensure that its efforts in fighting fraud are as effective as possible, the Commission would like to make certain that it has current data on the prevalence of various types of consumer fraud.

The Commission has conducted three previous surveys designed to estimate the prevalence of consumer fraud among U.S. adults. The most recent survey was conducted between November 2011 and February 2012. A report describing the findings of that survey—*Consumer Fraud in the United States, 2011: The Third FTC Survey*—was released in April 2013 and can be found at *https://www.ftc.gov/sites/default/files/documents/reports/consumer-fraud-united-states-2011-third-ftc-survey/130419fraudsurvey_0.pdf.*[2]

The 2011 survey asked about consumers' experiences with 15 specific and two more general types of fraud during the previous year. Among frauds covered by the survey were the purchase of a weight-loss product that did not work as promised, paying money or making a required purchase to obtain a promised prize or lottery winnings that had never been received, and being billed for a buyers' club membership that a person had not agreed to purchase. Based on the survey results, during 2011, 25.6 million U.S. adults—10.8 percent of the U.S. adult population—were victims of one or more of the frauds covered by the survey.

Among the 15 specific frauds included in the survey, the most frequently reported was the purchase of a weight-loss product that the seller falsely represented would allow the user to lose a substantial amount of weight easily or lose the weight without diet or exercise. The survey results suggested that during 2011 5.1 million consumers—2.1 percent of the U.S. adult population—had tried such a product and found that they only lost a little of the weight they had expected to lose or failed to lose any weight at all.

Description of the Collection of Information and Proposed Use: The FTC proposes to conduct a telephone survey of 3,700 randomly-selected consumers nationwide age 18 and over—100 in a pretest and 3,600 in the main survey—in order to gather specific information on the incidence of consumer fraud in the general population. As before, in order to obtain a more reliable picture of the experience of demographic groups that the earlier surveys found to be at an elevated risk of becoming victims of consumer fraud—including Hispanics and African Americans—the survey may oversample members of these groups. All information will be collected on a voluntary basis, and information on the identities of participants will not be collected. Subject to OMB approval for the survey,

[1] The comments are available at *https://www.ftc.gov/policy/public-comments/initiative-658.*

[2] Each survey was conducted under OMB Control Number 3084–0125. The first consumer fraud survey was conducted in May and June of 2003. The results of that survey are reported in ''Consumer Fraud in the United States: An FTC Survey'' (*https://www.ftc.gov/sites/default/files/documents/reports/consumer-fraud-united-states-ftc-survey/040805confraudrpt.pdf*). The 2005 survey was conducted in November and December of 2005 and the findings of that survey are reported in ''Consumer Fraud in the United States: The Second FTC Survey,'' (*https://www.ftc.gov/sites/default/files/documents/reports/consumer-fraud-united-states-second-federal-trade-commission-survey-staff-report-federal-trade/fraud.pdf*).

the FTC plans to contract with a consumer research firm to identify consumers and conduct the survey. The results will assist the FTC in determining the incidence of consumer fraud in the general population and whether the type or frequency of consumer fraud is changing. This information will inform the FTC about how best to combat consumer fraud.

The FTC's proposed sample size is similar to that used in the previous surveys. Many of the questions will be similar to the 2005 and 2011 surveys so that the results of the proposed survey can be compared to those from the earlier ones.[3] The FTC may choose to conduct another follow-up survey in approximately five years.

Estimated hours burden: The FTC will pretest the survey on approximately 100 respondents to ensure that all questions are easily understood. This pretest will take approximately 20 minutes per participant on average and 33 hours as a whole (100 respondents × 20 minutes each.). Answering the final survey will require approximately 15 minutes per respondent on average and 900 hours as a whole (3,600 respondents × 15 minutes each). Additionally, 100 interviews will be conducted with non-respondents—those who refused to participate or those with whom we did not have contact. These interviews will take approximately 5 minutes each, for a total burden of 8 hours. Thus, cumulative total burden will be approximately 941 hours.

Estimated Cost Burden: The cost per respondent should be negligible. Participation is voluntary and will not require start-up, capital, or labor expenditures by respondents.

Analysis of Comments Received: As noted above, three comments were received in response to the March 31, 2016 **Federal Register** Notice. A comment from Douglas M. Brooks, dated June 13, 2016, suggested that the survey should be designed to ''reflect the incidence of fraud in vulnerable populations, including non-English speaking persons and undocumented residents.'' As in prior surveys, the proposed survey will be conducted in both English and Spanish. In addition, questions are being added to the survey to determine whether the person being interviewed has recently immigrated to the United States.

A comment from Vin Dwyer, dated March 26, 2016, asked that the survey be structured to gather information about fraud that is the result of telemarketing calls to landline phones. As have prior surveys, the proposed survey will collect information about experiences of fraud that are promoted by a wide variety of communication methods, including landline telephone.

A comment from William Keep, John Breyault, and Peter Vander Nat (''Keep et al.''), dated June 11, 2016, requested greater clarity about changes in the data regarding victims of pyramid schemes. The commenters noted that a change was made in the definition of who was counted as being a victim of a pyramid scheme between the first FTC fraud survey, which was conducted in 2003, and the second survey, conducted in 2005. As they noted, this change and a discussion of the impact on the resulting estimates was discussed in the 2007 report that described the findings of the second survey. However, this change was not noted in the subsequent report on the 2011 survey, and the commenters were concerned that someone who looked only at the first and third reports might miss the change. While it seems somewhat unlikely that someone reading any report from the currently proposed survey would simply compare those figures to the first survey, which was conducted more than a dozen years before the proposed one, the Commission will seek to make clear that changes have been made.

Keep et al. also point out that a significant percentage of consumers only have cell phones and that it may be necessary to include calls to cell phones in conducting a telephone survey. Indeed, the 2011 survey included cell phones in the sample design. Moreover, in the proposed survey, 70 percent of interview calls will be to consumers using cell phones.

Keep et al. also express concern that some researchers who have used the information in the prior surveys have failed to note when differences between survey results are not statistically significant. When the FTC has made such comparisons, it has indicated whether the differences are significant or not and it will endeavor to do so for any future reports.

Finally, Keep et al. express concern about the FTC's discontinuing, after the initial 2003 survey, to collect and report on whether victims of the frauds covered by the surveys have complained about their experiences. In fact, FTC staff have collected data on complaining behavior in each of the later surveys and will do so for the proposed survey. Unfortunately, FTC staff have not had sufficient time to analyze these data since the initial report but hope to do such an analysis in the future.

Request for comment: You can file a comment online or on paper. For the Commission to consider your comment, we must receive it on or before January 5, 2017. Write ''Consumer Fraud Survey 2016: Paperwork Comment, FTC File No. P105502'' on your comment. Your comment—including your name and your state—will be placed on the public record of this proceeding, including, to the extent practicable, on the public Commission Web site, at *http://www.ftc.gov/os/publiccomments.shtm*. As a matter of discretion, the Commission tries to remove individuals' home contact information from comments before placing them on the Commission Web site.

Because your comment will be made public, you are solely responsible for making sure that your comment doesn't include any sensitive personal information, such as anyone's Social Security number, date of birth, driver's license number or other state identification number or foreign country equivalent, passport number, financial account number, or credit or debit card number. You are also solely responsible for making sure that your comment does not include any sensitive health information, such as medical records or other individually identifiable health information. In addition, do not include any ''[t]rade secret or any commercial or financial information which is . . . privileged or confidential,'' as discussed in Section 6(f) of the FTC Act, 15 U.S.C. 46(f), and FTC Rule 4.10(a)(2), 16 CFR 4.10(a)(2). In particular, do not include competitively sensitive information, such as costs, sales statistics, inventories, formulas, patterns, devices, manufacturing processes, or customer names. If you want the Commission to give your comment confidential treatment, you must file it in paper form, with a request for confidential treatment, and you must follow the procedure explained in FTC Rule 4.9(c), 16 CFR 4.9(c). Your comment will be kept confidential only if the FTC General Counsel grants your request in accordance with the law and the public interest.

Postal mail addressed to the Commission is subject to delay due to heightened security screening. As a result, we encourage you to submit your comments online, or to send them to the Commission by courier or overnight service. To make sure that the Commission considers your online comment, you must file it at *https://ftcpublic.commentworks.com/ftc/fraudsurvey2016,* by following the instructions on the web-based form. If this Notice appears at *http://www.regulations.gov/#!home,* you also

[3] The survey instrument for the 2011 Consumer Fraud Survey is included in the 2013 report as Appendix D.

may file a comment through that Web site.

If you file your comment on paper, write ''Consumer Fraud Survey 2016: Paperwork Comment, FTC File No. P105502'' on your comment and on the envelope, and mail it to the following address: Federal Trade Commission, Office of the Secretary, 600 Pennsylvania Avenue NW., Suite CC–5610 (Annex J), Washington, DC 20580, or deliver your comment to the following address: Federal Trade Commission, Office of the Secretary, Constitution Center, 400 7th Street SW., 5th Floor, Suite 5610 (Annex J), Washington, DC 20024. If possible, submit your paper comment to the Commission by courier or overnight service.

Comments on the information collection requirements subject to review under the PRA should additionally be submitted to OMB. If sent by U.S. mail, they should be addressed to Office of Information and Regulatory Affairs, Office of Management and Budget, Attention: Desk Officer for the Federal Trade Commission, New Executive Office Building, Docket Library, Room 10102, 725 17th Street NW., Washington, DC 20503. Comments sent to OMB by U.S. postal mail, however, are subject to delays due to heightened security precautions. Thus, comments instead should be sent by facsimile to (202) 395–5806.

The FTC Act and other laws that the Commission administers permit the collection of public comments to consider and use in this proceeding as appropriate. The Commission will consider all timely and responsive public comments that it receives on or before January 5, 2017. For information on the Commission's privacy policy, including routine uses permitted by the Privacy Act, see *http://www.ftc.gov/ftc/privacy.htm*.

David C. Shonka,

Acting General Counsel.

[FR Doc. 2016–29149 Filed 12–5–16; 8:45 am]

BILLING CODE 6750–01–P

GULF COAST ECOSYSTEM RESTORATION COUNCIL

[Docket No. 112062016–1111–07]

Amendment to Initial Funded Priorities List

AGENCY: Gulf Coast Ecosystem Restoration Council.

ACTION: Notice of amendment to Initial Funded Priorities List.

SUMMARY: On November 16, 2016, the Gulf Coast Ecosystem Restoration Council (Council) amended its Initial Funded Priorities List (FPL) to change the Responsible Council Member of the FPL activity entitled ''GOMA Coordination'' from the State of Alabama to the Department of Commerce.

FOR FURTHER INFORMATION CONTACT: Please send questions by email to *john.ettinger@restorethegulf.gov* or contact John Ettinger at (504) 444–3522.

SUPPLEMENTARY INFORMATION:

I. Background

The *Deepwater Horizon* oil spill led to passage of the Resources and Ecosystems Sustainability, Tourist Opportunities, and Revived Economies of the Gulf Coast States Act of 2012 (RESTORE Act), which dedicates 80% of all Clean Water Act administrative and civil penalties related to the oil spill to the Gulf Coast Restoration Trust Fund (Trust Fund). The RESTORE Act also established the Council as an independent federal entity comprised of the governors of five Gulf Coast states and the department heads of six federal agencies. Among other responsibilities, the Council administers a portion of the Trust Fund known as the Council-Selected Restoration Component in order to ''undertake projects and programs, using the best available science, which would restore and protect the natural resources, ecosystems, fisheries, marine and wildlife habitats, beaches, coastal wetlands, and economy of the Gulf Coast.'' Additional information on the Council can be found here: *https://www.restorethegulf.gov.*

On December 9, 2015, the Council approved an Initial FPL, which includes projects and programs approved for funding under the Council-Selected Restoration Component, along with activities that the Council identified as priorities for potential future funding. The FPL included the project entitled ''GOMA Coordination'' to support further development of a Monitoring Community of Practice using expertise from existing Gulf of Mexico Alliance Priority Issue Teams. As approved in the FPL, the Responsible Council Member of this activity was the State of Alabama.

On November 16, 2016, the Council voted to change the Responsible Council Member of the FPL activity entitled ''GOMA Coordination'' from the State of Alabama to the Department of Commerce. The Department of Commerce is a co-sponsor of a closely related FPL activity entitled ''Council Monitoring & Assessment Program Development.'' This proposed amendment would increase administrative efficiency and facilitate project implementation and tracking. No other aspect of this FPL activity will change.

Additional information on this project is available in an activity-specific appendix to the FPL, which can be found here: *https://www.restorethegulf.gov.*

Will D. Spoon,

Program Analyst, Gulf Coast Ecosystem Restoration Council.

[FR Doc. 2016–29238 Filed 12–5–16; 8:45 am]

BILLING CODE 6560–58–P

DEPARTMENT OF HEALTH AND HUMAN SERVICES

Centers for Disease Control and Prevention

Disease, Disability, and Injury Prevention and Control Special Emphasis Panel (SEP): Initial Review

In accordance with Section 10(a)(2) of the Federal Advisory Committee Act (Pub. L. 92–463), the Centers for Disease Control and Prevention (CDC) announces a meeting for the initial review of applications in response to Funding Opportunity Announcement (FOA) PAR15–352, Occupational Safety and Health Training Projects.

Times and Dates:

1:00 p.m.–6:00 p.m., EST, January 18, 2016 (Closed).

1:00 p.m.–6:00 p.m., EST, January 19, 2016 (Closed).

Place: Teleconference.

Status: The meeting will be closed to the public in accordance with provisions set forth in Section 552b(c)(4) and (6), Title 5 U.S.C., and the Determination of the Director, Management Analysis and Services Office, CDC, pursuant to Public Law 92–463.

Matters for Discussion: The meeting will include the initial review, discussion, and evaluation of applications received in response to ''Occupational Safety and Health Training Projects'', PAR15–352.

Contact Person for More Information: Nina L. Turner, Ph.D., Scientific Review Officer, CDC, 1095 Willowdale Road, Mailstop L1055, Morgantown, WV Telephone:(304) 285–6047, *NTURNER@CDC.GOV*.

The Director, Management Analysis and Services Office, has been delegated the authority to sign **Federal Register** notices pertaining to announcements of

meetings and other committee management activities, for both the Centers for Disease Control and Prevention and the Agency for Toxic Substances and Disease Registry.

Elaine L. Baker,

Director, Management Analysis and Services Office, Centers for Disease Control and Prevention.

[FR Doc. 2016–29176 Filed 12–5–16; 8:45 am]

BILLING CODE 4163–18–P

DEPARTMENT OF HEALTH AND HUMAN SERVICES

Centers for Disease Control and Prevention

Office for State, Tribal, Local and Territorial Support (OSTLTS)

In accordance with Presidential Executive Order No. 13175, November 6, 2000, and the Presidential Memorandum of November 5, 2009, and September 23, 2004, Consultation and Coordination with Indian Tribal Governments, CDC/Agency for Toxic Substances and Disease Registry (ATSDR), announces the following meetings and Tribal Consultation Session:

Name: Tribal Caucus, CDC/ATSDR Tribal Advisory Committee (TAC) Meeting and 16th Biannual Tribal Consultation Session

Times and Dates:

8:00 a.m.–5:00 p.m., EST, February 14, 2017 (Tribal Caucus)

8:00 a.m.–5:00 p.m., EST, February 15, 2017 (TAC Meeting and 16th Biannual Tribal Consultation Session)

Place: The Tribal Caucus, TAC Meeting and Tribal Consultation Session will be held at CDC, Global Communications Center, Building 19, Auditorium B3, 1600 Clifton Road NE., Atlanta, Georgia 30329.

Status: The meetings are being hosted by CDC/ATSDR in-person only and are open to the public. Attendees must pre-register for the event by Friday, January 13, 2017, at the following link: *http://www.cdc.gov/tribal/meetings.html.*

Purpose: The purpose of these recurring meetings is to advance CDC and ATSDR support for and collaboration with American Indian and Alaska Native (AI/AN) tribes, and to improve the health of AI/AN tribes by pursuing goals that include assisting in eliminating the health disparities faced by AI/AN tribes; ensuring that access to critical health and human services and public health services is maximized to advance or enhance the social, physical, and economic status of AI/ANs; and promoting health equity for all Indian people and communities. To advance these goals, CDC and ATSDR conducts government-to-government consultations with elected tribal officials or their authorized representatives. Consultation is an enhanced form of communication that emphasizes trust, respect, and shared responsibility. It is an open and free exchange of information and opinion among parties that leads to mutual understanding and comprehension.

Matters for Discussion: The TAC Meeting and Biannual Tribal Consultation Session will provide opportunities for tribal leaders to speak openly about the public health issues affecting their tribes. These meetings will include, but are not limited to, discussions about advancing CDC's tribal budget consultation process, connecting cultural and traditional practices to evidence-based interventions, and expanding disease prevention efforts throughout Indian country.

Tribes will also have an opportunity to present testimony about tribal health issues. All Tribal leaders are encouraged to submit written testimony by 5:00 p.m., EST, Friday, January 13, 2017, to LCDR Jessica Damon, Public Health Advisor for the Tribal Support Unit, OSTLTS, via mail to 4770 Buford Highway NE., MS E–70, Atlanta, Georgia, 30341–3717 or email to *TribalSupport@cdc.gov.*

Based on the number of tribal leaders giving testimony and the time available, it may be necessary to limit the time for each presenter.

The agenda is subject to change as priorities dictate.

Information about the TAC, CDC/ATSDR's Tribal Consultation Policy, and previous meetings can be found at *http://www.cdc.gov/tribal.*

Contact person for more information: LCDR Jessica Damon, Public Health Advisor, CDC/OSTLTS, 4770 Buford Highway NE., MS E–70, Atlanta, Georgia 30341–3717; email: *TribalSupport@cdc.gov* or telephone (404) 498–0563.

The Director, Management Analysis and Services Office, has been delegated the authority to sign **Federal Register** notices pertaining to announcements of meetings and other committee management activities, for both the Centers for Disease Control and Prevention, and the Agency for Toxic Substances and Disease Registry.

Elaine L. Baker,

Director, Management Analysis and Services Office, Centers for Disease Control and Prevention.

[FR Doc. 2016–29175 Filed 12–5–16; 8:45 am]

BILLING CODE 4163–18–P

DEPARTMENT OF HEALTH AND HUMAN SERVICES

Administration for Children and Families

Submission for OMB Review; Comment Request

Title: ACF Program Instruction—Children's Justice Act.

OMB No.: 0970–0425.

Description: The Program Instruction, prepared in response to the enactment of the Children's Justice Act (CJA), Title II of Public Law 111–320, Child Abuse Prevention and Treatment Act Reauthorization of 2010, provides direction to the States and Territories to accomplish the purposes of assisting States in developing, establishing and operating programs designed to improve: (1) The assessment and investigation of suspected child abuse and neglect cases, including cases of suspected child sexual abuse and exploitation, in a manner that limits additional trauma to the child and the child's family; (2) the assessment and investigation of cases of suspected child abuse-related fatalities and suspected child neglect-related fatalities; (3) the investigation and prosecution of cases of child abuse and neglect, including child sexual abuse and exploitation; and (4) the assessment and investigation of cases involving children with disabilities or serious health-related problems who are suspected victims of child abuse or neglect. This Program Instruction contains information collection requirements that are found in Public Law 111–320 at Sections 107(b) and 107(d), and pursuant to receiving a grant award. The information being collected is required by statute to be submitted pursuant to receiving a grant award. The information submitted will be used by the agency to ensure compliance with the statute; to monitor, evaluate and measure grantee achievements in addressing the investigation and prosecution of child abuse and neglect; and to report to Congress.

Respondents: State governments

ANNUAL BURDEN ESTIMATES

Instrument	Number of respondents	Number of responses per respondent	Average burden hours per response	Total burden hours
Application and Annual Report	52	1	60	3,120

Estimated Total Annual Burden Hours: 3,120.

Additional Information

Copies of the proposed collection may be obtained by writing to the Administration for Children and Families, Office of Planning, Research and Evaluation, 330 C Street SW., Washington, DC 20201. Attention Reports Clearance Officer. All requests should be identified by the title of the information collection. Email address: *infocollection@acf.hhs.gov.*

OMB Comment

OMB is required to make a decision concerning the collection of information between 30 and 60 days after publication of this document in the **Federal Register**. Therefore, a comment is best assured of having its full effect if OMB receives it within 30 days of publication. Written comments and recommendations for the proposed information collection should be sent directly to the following: Office of Management and Budget, Paperwork Reduction Project, Email: *OIRA_SUBMISSION@OMB.EOP.GOV.* Attn: Desk Officer for the Administration for Children and Families.

Robert Sargis,

Reports Clearance Officer.

[FR Doc. 2016–29210 Filed 12–5–16; 8:45 am]

BILLING CODE 4184–01–P

DEPARTMENT OF HEALTH AND HUMAN SERVICES

Administration for Children and Families

Submission for OMB Review; Comment Request

Title: State Abstinence Education Program.

OMB No.: 0970–0381.

Description: Section 510 of the Social Security Act (42 U.S.C. 710), as amended by section 214 of the Medicare Access and Children's Health Insurance Program Reauthorization Act of 2015 (Pub. L. 114–10) extended funding through FY 2017 for the State Abstinence Program.

The Family and Youth Services Bureau (FYSB) of the Administration for Children and Families' (ACF) Administration on Children, Youth and Families (ACYF) is accepting applications from States and Territories for the development and implementation of the State Abstinence Program. The purpose of this program is to support decisions to abstain from sexual activity by providing abstinence programming as defined by Section 510(b) of the Social Security Act (42 U.S.C. 710(b)) with a focus on those groups that are most likely to bear children out-of-wedlock, such as youth in or aging out of foster care and other vulnerable populations.

States are encouraged to develop flexible, medically accurate and effective abstinence-based plans responsive to their specific needs and inclusive of vulnerable populations. These plans must provide abstinence education, and at the option of the State, where appropriate, mentoring, counseling, and adult supervision to promote abstinence from sexual activity, with a focus on those groups which are most likely to bear children out-of-wedlock. An expected outcome for all programs is to promote abstinence from sexual activity.

OMB approval is requested to solicit comments from the public on paperwork reduction as it relates to ACYF's receipt of the following documents from applicants and awardees:

State Plan

Performance Progress Report

Respondents: 50 States and 9 Territories, to include, District of Columbia, Puerto Rico, Virgin Islands, Guam, American Samoa, Northern Mariana Islands, the Federated States of Micronesia, the Marshall Islands and Palau.

ANNUAL BURDEN ESTIMATES

Instrument	Number of respondents	Number of responses per respondent	Average burden hours per response	Total burden hours
State Plan	59	1	40	2,360
Performance Progress Reports	59	2	30	3,540

Estimated Total Annual Burden Hours: 5,900.

Additional Information: Copies of the proposed collection may be obtained by writing to the Administration for Children and Families, Office of Planning, Research and Evaluation, 330 C Street SW., Washington, DC 20201. Attention Reports Clearance Officer. All requests should be identified by the title of the information collection. Email address: *infocollection@acf.hhs.gov.*

OMB Comment: OMB is required to make a decision concerning the collection of information between 30 and 60 days after publication of this document in the **Federal Register**. Therefore, a comment is best assured of having its full effect if OMB receives it within 30 days of publication. Written comments and recommendations for the proposed information collection should be sent directly to the following: Office of Management and Budget, Paperwork Reduction Project, Email: *OIRA_SUBMISSION@OMB.EOP.GOV*, Attn: Desk Officer for the Administration for Children and Families.

Robert Sargis,

Reports Clearance Officer.

[FR Doc. 2016–29182 Filed 12–5–16; 8:45 am]

BILLING CODE 4184–01–P

DEPARTMENT OF HEALTH AND HUMAN SERVICES

Office of the Secretary

Federal Financial Participation in State Assistance Expenditures; Federal Matching Shares for Medicaid, the State Children's Health Insurance Program, and Aid to Needy Aged, Blind, or Disabled Persons for October 1, 2017 Through September 30, 2018; Correction

AGENCY: Office of the Secretary (OS), DHHS.

ACTION: Notice; correction.

SUMMARY: This document corrects a technical error that appeared in the notice published in the November 15, 2016 **Federal Register** entitled ''Federal Financial Participation in State Assistance Expenditures; Federal Matching Shares for Medicaid, the State Children's Health Insurance Program, and Aid to Needy Aged, Blind, or Disabled Persons for October 1, 2017 through September 30, 2018.''

FOR FURTHER INFORMATION CONTACT: Thomas Musco or Rose Chu, Office of Health Policy, Office of the Assistant Secretary for Planning and Evaluation, Room 447D—Hubert H. Humphrey Building, 200 Independence Avenue SW., Washington, DC 20201, (202) 690–6870.

SUPPLEMENTARY INFORMATION:

I. Background

In FR Doc. 2016–27424 of November 15, 2016 (81 FR 80078), there was a technical error in the table that appeared in the notice that is identified and corrected in the Correction of Errors section below.

II. Correction of Errors

In FR Doc. 2016–27424 of November 15, 2016 (81 FR 80078), make the following correction:

On page 80080, in Table 1 entitled, Federal Medical Assistance Percentages and Enhanced Federal Medical Assistance Percentages, Effective October 1, 2017–September 30, 2018—Continued'', change the third column entitled, ''Enhanced federal medical assistance percentages'' for Utah from 78.18 to 79.18.

Dated: November 30, 2016.

Madhura C. Valverde,

Executive Secretary, Department of Health and Human Services.

[FR Doc. 2016–29184 Filed 12–5–16; 8:45 am]

BILLING CODE 4150–05–P

DEPARTMENT OF HEALTH AND HUMAN SERVICES

National Institutes of Health

National Institute on Aging; Notice of Meeting

Pursuant to section 10(d) of the Federal Advisory Committee Act, as amended (5 U.S.C. App.), notice is hereby given of a meeting of the National Advisory Council on Aging.

The meeting will be open to the public as indicated below, with attendance limited to space available. Individuals who plan to attend and need special assistance, such as sign language interpretation or other reasonable accommodations, should notify the Contact Person listed below in advance of the meeting.

The meeting will be closed to the public in accordance with the provisions set forth in sections 552b(c)(4) and 552b(c)(6), Title 5 U.S.C., as amended. The grant applications and the discussions could disclose confidential trade secrets or commercial property such as patentable material, and personal information concerning individuals associated with the grant applications, the disclosure of which would constitute a clearly unwarranted invasion of personal privacy.

Name of Committee: National Advisory Council on Aging.

Date: January 17–18, 2017.

Closed: January 17, 2017, 3:00 p.m. to 5:00 p.m.

Agenda: To review and evaluate grant applications.

Place: National Institutes of Health, Building 31, C Wing 6th Floor Conference Room 10, 9000 Rockville Pike, Bethesda, MD 20892.

Open: January 18, 2017, 8:00 a.m. to 1:15 p.m.

Agenda: Call to order and report from the Director; Discussion of future meeting dates; Consideration of minutes of last meeting; Reports from Task Force on Minority Aging Research, Working Group on Program, and Program Highlights; Council Speaker; and Intramural Program Report.

Place: National Institutes of Health, Building 31, C Wing 6th Floor Conference Room 10, 9000 Rockville Pike, Bethesda, MD 20892.

Closed: January 18, 2017, 1:15 p.m. to 1:45 p.m.

Agenda: To review and evaluate Intramural Research Program.

Place: National Institutes of Health, Building 31, C Wing 6th Floor Conference Room 10, 9000 Rockville Pike, Bethesda, MD 20892.

Contact Person: Robin Barr, Director, National Institute on Aging, Office of Extramural Activities, Gateway Building, 7201 Wisconsin Avenue, Bethesda, MD 20814, (301) 496–9322, *barrr@nia.nih.gov*.

Any interested person may file written comments with the committee by forwarding the statement to the Contact Person listed on this notice. The statement should include the name, address, telephone number and when applicable, the business or professional affiliation of the interested person.

In the interest of security, NIH has instituted stringent procedures for entrance onto the NIH campus. All visitor vehicles, including taxicabs, hotel, and airport shuttles will be inspected before being allowed on campus. Visitors will be asked to show one form of identification (for example, a government-issued photo ID, driver's license, or passport) and to state the purpose of their visit.

Information is also available on the Institute's/Center's home page: *www.nih.gov/nia/naca/,* where an agenda and any additional information for the meeting will be posted when available.

(Catalogue of Federal Domestic Assistance Program Nos. 93.866, Aging Research, National Institutes of Health, HHS)

Dated: November 30, 2016.

Melanie J. Pantoja,

Program Analyst, Office of Federal Advisory Committee Policy.

[FR Doc. 2016–29139 Filed 12–5–16; 8:45 am]

BILLING CODE 4140–01–P

DEPARTMENT OF HEALTH AND HUMAN SERVICES

National Institutes of Health

Eunice Kennedy Shriver National Institute of Child Health & Human Development Notice of Closed Meeting

Pursuant to section 10(d) of the Federal Advisory Committee Act, as amended (5 U.S.C. App.), notice is hereby given of the following meeting.

The meeting will be closed to the public in accordance with the provisions set forth in sections 552b(c)(4) and 552b(c)(6), Title 5 U.S.C., as amended. The grant applications and the discussions could disclose confidential trade secrets or commercial property such as patentable material, and personal information concerning individuals associated with the grant applications, the disclosure of which would constitute a clearly unwarranted invasion of personal privacy.

Name of Committee: National Institute of Child Health and Human Development Special Emphasis Panel; Developmental Biology/Bioinformatics Resource Program Applications.

Date: January 12, 2017.

Time: 1:05 p.m. to 5:30 p.m.

Agenda: To review and evaluate grant applications.

Place: National Institutes of Health, Bethesda, MD 20892 (Telephone Conference Call).

Contact Person: Cathy J. Wedeen, Ph.D., Scientific Review Officer, Division of

Scientific Review, OD, Eunice Kennedy Shriver National Institute of Child Health and Human Development, NIH, DHHS, 6710B Rockledge Drive, Bethesda, MD 20892–7501, 301–435–6878, *wedeenc@mail.nih.gov*.

(Catalogue of Federal Domestic Assistance Program Nos. 93.864, Population Research; 93.865, Research for Mothers and Children; 93.929, Center for Medical Rehabilitation Research; 93.209, Contraception and Infertility Loan Repayment Program, National Institutes of Health, HHS)

Dated: November 29, 2016.

Michelle Trout,

Program Analyst, Office of Federal Advisory Committee Policy.

[FR Doc. 2016–29141 Filed 12–5–16; 8:45 am]

BILLING CODE 4140–01–P

DEPARTMENT OF HEALTH AND HUMAN SERVICES

National Institutes of Health

National Institute of Dental & Craniofacial Research; Notice of Closed Meeting

Pursuant to section 10(d) of the Federal Advisory Committee Act, as amended (5 U.S.C. App.), notice is hereby given of the following meeting.

The meeting will be closed to the public in accordance with the provisions set forth in sections 552b(c)(4) and 552b(c)(6), Title 5 U.S.C., as amended. The grant applications and the discussions could disclose confidential trade secrets or commercial property such as patentable material, and personal information concerning individuals associated with the grant applications, the disclosure of which would constitute a clearly unwarranted invasion of personal privacy.

Name of Committee: National Institute of Dental and Craniofacial Research Special Emphasis Panel.

Date: December 12, 2016.

Time: 1:00 p.m. to 2:00 p.m.

Agenda: To review and evaluate grant applications.

Place: National Institutes of Health, Two Democracy Plaza, 6707 Democracy Boulevard, Bethesda, MD 20892 (Telephone Conference Call).

Contact Person: Guo He Zhang, MPH, Ph.D., Scientific Review Officer, Scientific Review Branch, National Institute of Dental and Craniofacial Research, National Institutes of Health, 6701 Democracy Boulevard, Suite 672, Bethesda, MD 20892, *zhanggu@mail.nih.gov*.

This notice is being published less than 15 days prior to the meeting due to the timing limitations imposed by the review and funding cycle.

(Catalogue of Federal Domestic Assistance Program Nos. 93.121, Oral Diseases and Disorders Research, National Institutes of Health, HHS)

Dated: November 28, 2016.

Natasha M. Copeland,

Program Analyst, Office of Federal Advisory Committee Policy.

[FR Doc. 2016–29142 Filed 12–5–16; 8:45 am]

BILLING CODE 4140–01–P

DEPARTMENT OF HEALTH AND HUMAN SERVICES

National Institutes of Health

Government-Owned Invention; Availability for Licensing

AGENCY: National Institutes of Health, HHS.

ACTION: Notice.

SUMMARY: The invention listed below is owned by an agency of the U.S. Government and is available for licensing in the U.S. to achieve expeditious commercialization of results of federally-funded research and development.

FOR FURTHER INFORMATION CONTACT: Licensing information may be obtained by emailing the indicated licensing contact at the National Heart, Lung, and Blood, Office of Technology Transfer and Development Office of Technology Transfer, 31 Center Drive Room 4A29, MSC 2479, Bethesda, MD 20892–2479; telephone: 301–402–5579. A signed Confidential Disclosure Agreement may be required to receive any unpublished information.

SUPPLEMENTARY INFORMATION: Notice of Licensing of Government-Owned Inventions in accordance with 35 U.S.C. 209 and 37 CFR part 404. Technology description follows.

ApoA-1 Mimetic Peptides Promoting Lipid Efflux From Cells for Treatment of Vascular Disorders

Description of Technology: This invention involves ApoA-1 mimetic peptides with multiple amphipathic alpha-helical domains that promote lipid efflux from cells and are useful in the treatment and prevention of dyslipidemic, inflammatory and vascular disorders. IND-enabling studies for one of the peptides, named Fx–5A, are completed in preparation for an IND filing at the FDA, to be followed by a Phase I clinical trial planned for 2017. Disorders amenable to treatment with the peptides include hyperlipidemia, hyperlipoproteinemia, hypercholesterolemia, HDL deficiency, hypertriglyceridemia, apoA-I deficiency, acute coronary syndrome, angina pectoris, aortic valve stenosis, atherosclerosis, carotid atherosclerosis, congestive heart failure, cerebral stroke, coronary artery disease, inflammation of the cardiovascular system, intermittent claudication, myocardial infarction, peripheral vascular disease, post-ischemic reperfusion, renal artery stenosis, reperfusion myocardial injury, restenosis, and thrombotic stroke.

Potential Commercial Applications:

- Treatment and prevention of many hereditary, chronic and acute dyslipidemic and vascular disorders, where other treatments are not effective or too invasive, such as statins, partial ileal bypass surgery, portacaval shunt, liver transplantation, and removal of atherogenic lipoproteins by one of several apheresis procedures.
- Also applicable to the treatment of inflammation, asthma, colitis, inflammatory bowel disease (IBD), chronic kidney disease (CKD).

Development Stage: Early-stage; In vitro data available; In vivo data available (animal)

Inventors: Alan T. Remaley, Stephen J. Demosky, John A. Stonik, Marcelo J.A. Amar, Edward B. Neufeld, Fairwell Thomas, H. Bryan Brewer (all of NHLBI)

Publications:

1. Jin X, et al. ABCA1 (ATP-Binding Cassette Transporter A1) Mediates ApoA-I (Apolipoprotein A-I) and ApoA-I Mimetic Peptide Mobilization of Extracellular Cholesterol Microdomains Deposited by Macrophages. Arterioscler Thromb Vasc Biol. 2016 Dec;36(12):2283–2291. [PMID 27758769]
2. Nowacki TM, et al. The 5A apolipoprotein A–I (apoA-I) mimetic peptide ameliorates experimental colitis by regulating monocyte infiltration. Br J Pharmacol. 2016 Sep;173(18):2780–92. [PMID 27425846]
3. Yao X, et al. The A's Have It: Developing Apolipoprotein A-I Mimetic Peptides Into a Novel Treatment for Asthma. Chest. 2016 Aug;150(2):283–8. [PMID 27327118]
4. Souza AC, et al. Antagonism of scavenger receptor CD36 by 5A peptide prevents chronic kidney disease progression in mice independent of blood pressure regulation. Kidney Int. 2016 Apr;89(4):809–22. [PMID 26994575]
5. Schwendeman A, et al. The effect of phospholipid composition of reconstituted HDL on its cholesterol efflux and anti-inflammatory properties. J Lipid Res. 2015 Sep;56(9):1727–37. [PMID 26117661]
6. Sviridov DO, et al. Hydrophobic amino acids in the hinge region of the 5A apolipoprotein mimetic peptide are essential for promoting cholesterol efflux by the ABCA1 transporter. J Pharmacol Exp Ther. 2013 Jan;344(1):50–8. [PMID 23042953]
7. Dai C, et al. Apolipoprotein A-I attenuates ovalbumin-induced neutrophilic airway inflammation via a granulocyte colony-

stimulating factor-dependent mechanism. Am J Respir Cell Mol Biol. 2012 Aug;47(2):186–95. [PMID 22427535]
8. Yao X, et al. 5A, an apolipoprotein A-I mimetic peptide, attenuates the induction of house dust mite-induced asthma. J Immunol. 2011 Jan 1;186(1):576–83. [PMID 21115733]
9. Osei-Hwedieh DO, et al. Apolipoprotein mimetic peptides: Mechanisms of action as anti-atherogenic agents. Pharmacol Ther. 2011 Apr;130(1):83–91. [PMID 21172387]
10. D'Souza W, et al. Structure/function relationships of apolipoprotein a-I mimetic peptides: implications for antiatherogenic activities of high-density lipoprotein. Circ Res. 2010 Jul 23;107(2):217–27. [PMID 20508181]
11. Amar MJ, et al. 5A apolipoprotein mimetic peptide promotes cholesterol efflux and reduces atherosclerosis in mice. J Pharmacol Exp Ther. 2010 Aug;334(2):634–41. [PMID 20484557]
12. Tabet F, et al. The 5A apolipoprotein A-I mimetic peptide displays antiinflammatory and antioxidant properties in vivo and in vitro. Arterioscler Thromb Vasc Biol. 2010 Feb;30(2):246–52. [PMID 19965776]
13. Sethi AA, et al. Asymmetry in the lipid affinity of bihelical amphipathic peptides. A structural determinant for the specificity of ABCA1–dependent cholesterol efflux by peptides. J Biol Chem. 2008 Nov 21;283(47):32273–82. [PMID 18805791]

Intellectual Property: NIH Reference No. E–114–2004/0—Issued Patents:

- US 7,572,771 issued 2009–11–08;
- US 8,071,746 issued 2011–12–06;
- US 8,148,323 issued 2012–04–03;
- US 8,835,378 issued 2014–09–16;
- AU 2005295640 issued 2011–11–10;
- CA 2584048 issued 2016–08–09;
- EP 1812474 issued 2010–05–26, validated in CH, DE, ES, FR, GB and IT; and
- JP 5,091,679 issued 2012–09–21.

Licensing Contact: Cristina Thalhammer-Reyero, Ph.D., M.B.A.; 301–435–4507; *thalhamc@mail.nih.gov.*

Collaborative Research Opportunity: The National Heart, Lung, and Blood Institute is seeking statements of capability or interest from parties interested in collaborative research to further develop, evaluate or commercialize ApoA–1 mimetic peptides. For collaboration opportunities, please contact Denise Crooks, Ph.D. at 301–435–0103 or *crooksd@nhlbi.nih.gov.*

Dated: November 30, 2016.

Cristina Thalhammer-Reyero,

Senior Licensing and Patenting Manager, Office of Technology Transfer and Development, National Heart, Lung, and Blood Institute.

[FR Doc. 2016–29151 Filed 12–5–16; 8:45 am]

BILLING CODE 4140–01–P

DEPARTMENT OF HEALTH AND HUMAN SERVICES

National Institutes of Health

Eunice Kennedy Shriver National Institute of Child Health & Human Development; Notice of Closed Meetings

Pursuant to section 10(d) of the Federal Advisory Committee Act, as amended (5 U.S.C. App.), notice is hereby given of the following meetings.

The meetings will be closed to the public in accordance with the provisions set forth in sections 552b(c)(4) and 552b(c)(6), Title 5 U.S.C., as amended. The grant applications and the discussions could disclose confidential trade secrets or commercial property such as patentable material, and personal information concerning individuals associated with the grant applications, the disclosure of which would constitute a clearly unwarranted invasion of personal privacy.

Name of Committee: National Institute of Child Health and Human Development Special Emphasis Panel; NICHD T35 Teleconference Review.

Date: February 6, 2017.

Time: 2:00 p.m. to 3:00 p.m.

Agenda: To review and evaluate grant applications.

Place: National Institutes of Health, Rockledge 6710B, 6701B Rockledge Drive, Bethesda, MD 20817 (Telephone Conference Call).

Contact Person: Sherry L. Dupere, Ph.D., Chief, Scientific Review Branch, Scientific Review Branch, Eunice Kennedy Shriver National Institute of Child Health and Human Development, NIH, 6710B Bethesda Drive, 2221A, Bethesda, MD 20892, 301–451–3415, *duperes@mail.nih.gov.*

Name of Committee: National Institute of Child Health and Human Development Special Emphasis Panel; NICHD Consortium for Research on Pediatric Trauma and Injury Prevention (R24).

Date: April 10, 2017.

Time: 8:00 a.m. to 5:00 p.m.

Agenda: To review and evaluate grant applications.

Place: Embassy Suites at the Chevy Chase Pavilion, 4300 Military Road NW., Washington, DC 20015.

Contact Person: Joanna Kubler-Kielb, Scientific Review Officer, Scientific Review Branch, Eunice Kennedy Shriver National Institute of Child Health and Human Development, 6710B Bethesda Drive, Bethesda, MD 20892, 301–435–6916, *kielbj@mail.nih.gov.*

(Catalogue of Federal Domestic Assistance Program Nos. 93.864, Population Research; 93.865, Research for Mothers and Children; 93.929, Center for Medical Rehabilitation Research; 93.209, Contraception and Infertility Loan Repayment Program, National Institutes of Health, HHS)

Dated: November 29, 2016.

Michelle Trout,

Program Analyst, Office of Federal Advisory Committee Policy.

[FR Doc. 2016–29140 Filed 12–5–16; 8:45 am]

BILLING CODE 4140–01–P

DEPARTMENT OF HOMELAND SECURITY

U.S. Customs and Border Protection

Accreditation and Approval of Camin Cargo Control, Inc., as a Commercial Gauger and Laboratory

AGENCY: U.S. Customs and Border Protection, Department of Homeland Security.

ACTION: Notice of accreditation and approval of Camin Cargo Control, Inc., as a commercial gauger and laboratory.

SUMMARY: Notice is hereby given, pursuant to CBP regulations, that Camin Cargo Control, Inc., has been approved to gauge and accredited to test petroleum and certain petroleum products for customs purposes for the next three years as of June 7, 2016.

DATES: *Effective Dates:* The accreditation and approval of Camin Cargo Control, Inc., as commercial gauger and laboratory became effective on June 7, 2016. The next triennial inspection date will be scheduled for June 2019.

FOR FURTHER INFORMATION CONTACT: Approved Gauger and Accredited Laboratories Manager, Laboratories and Scientific Services Directorate, U.S. Customs and Border Protection, 1300 Pennsylvania Avenue NW., Suite 1500N, Washington, DC 20229, tel. 202–344–1060.

SUPPLEMENTARY INFORMATION: Notice is hereby given pursuant to 19 CFR 151.12 and 19 CFR 151.13, that Camin Cargo Control, Inc., 3001 SW. 3rd Ave., Suite #8, Fort Lauderdale, FL 33315, has been approved to gauge and accredited to test petroleum and certain petroleum products for customs purposes, in accordance with the provisions of 19 CFR 151.12 and 19 CFR 151.13. Camin Cargo Control, Inc., is approved for the following gauging procedures for petroleum and certain petroleum products set forth by the American Petroleum Institute (API):

API chapters	Title
3	Tank gauging.
7	Temperature Determination.
8	Sampling.
9	Density Determination.
12	Calculations.
17	Maritime Measurements.

Camin Cargo Control, Inc., is accredited for the following laboratory analysis procedures and methods for petroleum and certain petroleum products set forth by the U.S. Customs and Border Protection Laboratory Methods (CBPL) and American Society for Testing and Materials (ASTM):

CBPL No.	ASTM	Title
27–01	D287	Standard Test Method for API Gravity of crude Petroleum and Petroleum Products.
27–03	D4006	Standard Test Method for Water in Crude Oil by Distillation.
27–04	D95	Standard Test Method for Water in Petroleum Products and Bituminous Materials by Distillation.
27–05	D4928	Standard Test Method for Water in Crude Oils by Coulometric Karl Fischer Titration.
27–06	D473	Standard Test Method for Sediment in Crude Oils and Fuel Oils by the Extraction Method.
27–07	D4807	Standard Test Method for Sediment in Crude Oil by Membrane Filtration.
27–08	D86	Standard Test Method for Distillation of Petroleum Products.
27–11	D445	Standard Test Method for Kinematic Viscosity of Transparent and Opaque Liquids.
27–48	D4052	Standard Test Method for Density and Relative Density of Liquids by Digital Density Meter.
27–57	D7039	Standard Test Method for Sulfur in Gasoline and Diesel Fuel by Monochromatic Wavelength Dispersive X-Ray Fluorescence Spectrometry.
27–58	D5191	Standard Test Method For Vapor Pressure of Petroleum Products.

Anyone wishing to employ this entity to conduct laboratory analyses and gauger services should request and receive written assurances from the entity that it is accredited or approved by the U.S. Customs and Border Protection to conduct the specific test or gauger service requested. Alternatively, inquiries regarding the specific test or gauger service this entity is accredited or approved to perform may be directed to the U.S. Customs and Border Protection by calling (202) 344–1060. The inquiry may also be sent to *cbp.labhq@dhs.gov*. Please reference the Web site listed below for the current CBP Approved Gaugers and Accredited Laboratories List. *http://www.cbp.gov/about/labs-scientific/commercial-gaugers-and-laboratories*.

Dated: November 29, 2016.

Ira S. Reese,

Executive Director, Laboratories and Scientific Services Directorate.

[FR Doc. 2016–29153 Filed 12–5–16; 8:45 am]

BILLING CODE 9111–14–P

DEPARTMENT OF HOMELAND SECURITY

U.S. Customs and Border Protection

Accreditation and Approval of AMSPEC SERVICES, LLC, as a Commercial Gauger and Laboratory

AGENCY: U.S. Customs and Border Protection, Department of Homeland Security.

ACTION: Notice of accreditation and approval of AmSpec Services, LLC, as a commercial gauger and laboratory.

SUMMARY: Notice is hereby given, pursuant to CBP regulations, that AmSpec Services, LLC, has been approved to gauge petroleum and certain petroleum products and accredited to test petroleum and certain petroleum products for customs purposes for the next three years as of July 6, 2016.

DATES: *Effective Dates:* The accreditation and approval of AmSpec Services, LLC, as commercial gauger and laboratory became effective on July 6, 2016. The next triennial inspection date will be scheduled for July 2019.

FOR FURTHER INFORMATION CONTACT: Approved Gauger and Accredited Laboratories Manager, Laboratories and Scientific Services Directorate, U.S. Customs and Border Protection, 1300 Pennsylvania Avenue NW., Suite 1500N, Washington, DC 20229, tel. 202–344–1060.

SUPPLEMENTARY INFORMATION: Notice is hereby given pursuant to 19 CFR 151.12 and 19 CFR 151.13, that AmSpec Services, LLC, 3800 Highway 225, Pasadena, TX 77503, has been approved to gauge petroleum and certain petroleum products and accredited to test petroleum and certain petroleum products for customs purposes, in accordance with the provisions of 19 CFR 151.12 and 19 CFR 151.13. AmSpec Services, LLC is approved for the following gauging procedures for petroleum and certain petroleum products from the American Petroleum Institute (API):

API chapters	Title
3	Tank Gauging.
5	Metering.
7	Temperature Determination.
8	Sampling.
12	Calculations.
17	Maritime Measurement.

AmSpec Services, LLC is accredited for the following laboratory analysis procedures and methods for petroleum and certain petroleum products set forth by the U.S. Customs and Border Protection Laboratory Methods (CBPL) and American Society for Testing and Materials (ASTM):

CBPL No.	ASTM	Title
27–03	D4006	Standard Test Method for Water in Crude Oil by Distillation.
27–04	D95	Standard Test Method for Water in Petroleum Products and Bituminous Materials by Distillation.
27–06	D473	Standard Test Method for Sediment in Crude Oils and Fuel Oils by the Extraction Method.
27–08	D86	Standard Test Method for Distillation of Petroleum Products.
27–10	D323	Standard Test Method for Vapor Pressure of Petroleum Products (Reid Method).
27–11	D445	Standard Test Method for Kinematic Viscosity of Transparent and Opaque Liquids.
27–13	D4294	Standard Test Method for Sulfur in Petroleum and Petroleum Products by Energy-Dispersive X-ray Fluorescence Spectrometry.
27–14	D2622	Standard Test Method for Sulfur in Petroleum Products.
27–46	D5002	Standard Test Method for Density and Relative Density of Crude Oils by Digital Density Analyzer.
27–48	D4052	Standard Test Method for Density and Relative Density of Liquids by Digital Density Meter.
27–50	D93	Standard Test Methods for Flash-Point by Pensky-Martens Closed Cup Tester.

CBPL No.	ASTM	Title
27–53	D2709	Standard Test Method for Water and Sediment in Middle Distillate Fuels by Centrifuge.
27–54	D1796	Standard Test Method for Water and Sediment in Fuel Oils by the Centrifuge Method.
27–58	D5191	Standard Test Method For Vapor Pressure of Petroleum Products.

Anyone wishing to employ this entity to conduct laboratory analyses and gauger services should request and receive written assurances from the entity that it is accredited or approved by the U.S. Customs and Border Protection to conduct the specific test or gauger service requested. Alternatively, inquiries regarding the specific test or gauger service this entity is accredited or approved to perform may be directed to the U.S. Customs and Border Protection by calling (202) 344–1060. The inquiry may also be sent to *CBPGaugersLabs@cbp.dhs.gov*. Please reference the Web site listed below for a complete listing of CBP approved gaugers and accredited laboratories. *http://www.cbp.gov/about/labs-scientific/commercial-gaugers-and-laboratories*.

Dated: November 29, 2016.

Ira S. Reese,

Executive Director, Laboratories and Scientific Services Directorate.

[FR Doc. 2016–29157 Filed 12–5–16; 8:45 am]

BILLING CODE 9111–14–P

DEPARTMENT OF HOMELAND SECURITY

U.S. Customs and Border Protection

Accreditation and Approval of SGS North America, Inc., as a Commercial Gauger and Laboratory

AGENCY: U.S. Customs and Border Protection, Department of Homeland Security.

ACTION: Notice of accreditation and approval of SGS North America, Inc., as a commercial gauger and laboratory.

SUMMARY: Notice is hereby given, pursuant to CBP regulations, that SGS North America, Inc., has been approved to gauge and accredited to test petroleum and petroleum products for customs purposes for the next three years as of June 9, 2016.

DATES: *Effective Dates:* The accreditation and approval of SGS North America, Inc., as commercial gauger and laboratory became effective on June 9, 2016. The next triennial inspection date will be scheduled for June 2019.

FOR FURTHER INFORMATION CONTACT: Approved Gauger and Accredited Laboratories Manager, Laboratories and Scientific Services Directorate, U.S. Customs and Border Protection, 1300 Pennsylvania Avenue NW., Suite 1500N, Washington, DC 20229, tel. 202–344–1060.

SUPPLEMENTARY INFORMATION: Notice is hereby given pursuant to 19 CFR 151.12 and 19 CFR 151.13, that SGS North America, Inc., 8985 Columbia Rd., Port Canaveral, FL 32920, has been approved to gauge and accredited to test petroleum and petroleum products for customs purposes, in accordance with the provisions of 19 CFR 151.12 and 19 CFR 151.13. SGS North America, Inc., is approved for the following gauging procedures for petroleum and certain petroleum products set forth by the American Petroleum Institute (API):

API chapters	Title
3	Tank gauging.
7	Temperature Determination.
8	Sampling.
9	Density Determination.
12	Calculations.
17	Maritime Measurements.

SGS North America, Inc., is accredited for the following laboratory analysis procedures and methods for petroleum and certain petroleum products set forth by the U.S. Customs and Border Protection Laboratory Methods (CBPL) and American Society for Testing and Materials (ASTM):

CBPL No.	ASTM	Title
27–04	D95	Standard Test Method for Water in Petroleum Products and Bituminous Materials by Distillation.
27–06	D473	Standard Test Method for Sediment in Crude Oils and Fuel Oils by the Extraction Method.
27–08	D86	Standard Test Method for Distillation of Petroleum Products.
27–11	D445	Standard Test Method for Kinematic Viscosity of Transparent and Opaque Liquids.
27–13	D4294	Standard Test Method for Sulfur in Petroleum and Petroleum Products by Energy-Dispersive X-ray Fluorescence Spectrometry.
27–14	D2622	Standard Test Method for Sulfur in Petroleum Products.
27–48	D4052	Standard Test Method for Density and Relative Density of Liquids by Digital Density Meter.
27–54	D1796	Standard Test Method for Water and Sediment in Fuel Oils by the Centrifuge Method.
27–58	D5191	Standard Test Method For Vapor Pressure of Petroleum Products.

Anyone wishing to employ this entity to conduct laboratory analyses and gauger services should request and receive written assurances from the entity that it is accredited or approved by the U.S. Customs and Border Protection to conduct the specific test or gauger service requested. Alternatively, inquiries regarding the specific test or gauger service this entity is accredited or approved to perform may be directed to the U.S. Customs and Border Protection by calling (202) 344–1060. The inquiry may also be sent to *cbp.labhq@dhs.gov*. Please reference the Web site listed below for a complete listing of CBP approved gaugers and accredited laboratories. *http://www.cbp.gov/about/labs-scientific/commercial-gaugers-and-laboratories.*

Dated: November 29, 2016.

Ira S. Reese,

Executive Director, Laboratories and Scientific Services Directorate.

[FR Doc. 2016–29154 Filed 12–5–16; 8:45 am]

BILLING CODE 9111–14–P

DEPARTMENT OF HOMELAND SECURITY

U.S. Customs and Border Protection

Accreditation and Approval of Chem Gas International LLC as a Commercial Gauger and Laboratory

AGENCY: U.S. Customs and Border Protection, Department of Homeland Security.

ACTION: Notice of accreditation and approval of Chem Gas International LLC as a commercial gauger and laboratory.

SUMMARY: Notice is hereby given, pursuant to CBP regulations, that Chem Gas International LLC has been approved to gauge petroleum and certain petroleum products and accredited to test petroleum and certain petroleum products for customs purposes for the next three years as of January 28, 2016.

DATES: *Effective Dates:* The accreditation and approval of Chem Gas International LLC, as commercial gauger and laboratory became effective on January 28, 2016. The next triennial inspection date will be scheduled for January 2019.

FOR FURTHER INFORMATION CONTACT: Approved Gauger and Accredited Laboratories Manager, Laboratories and Scientific Services Directorate, U.S. Customs and Border Protection, 1300 Pennsylvania Avenue NW., Suite 1500N, Washington, DC 20229, tel. 202–344–1060.

SUPPLEMENTARY INFORMATION: Notice is hereby given pursuant to 19 CFR 151.12 and 19 CFR 151.13, that Chem Gas International LLC, 3500 S. Richey St., Houston, TX 77017, has been approved to gauge petroleum and certain petroleum products and accredited to test petroleum and certain petroleum products for customs purposes, in accordance with the provisions of 19 CFR 151.12 and 19 CFR 151.13. Chem Gas International LLC is approved for the following gauging procedures for petroleum and certain petroleum products from the American Petroleum Institute (API):

API chapters	Title
3	Tank gauging.
7	Temperature determination.
8	Sampling.
11	Physical Properties Data.
12	Calculations.
17	Maritime measurement.

Chem Gas International LLC is accredited for the following laboratory analysis procedures and methods for petroleum and certain petroleum products set forth by the U.S. Customs and Border Protection Laboratory Methods (CBPL) and American Society for Testing and Materials (ASTM):

CBPL No.	ASTM	Title
27–48	D4052	Standard Test Method for Density and Relative Density of Liquids by Digital Density Meter.

Anyone wishing to employ this entity to conduct laboratory analyses and gauger services should request and receive written assurances from the entity that it is accredited or approved by the U.S. Customs and Border Protection to conduct the specific test or gauger service requested. Alternatively, inquiries regarding the specific test or gauger service this entity is accredited or approved to perform may be directed to the U.S. Customs and Border Protection by calling (202) 344–1060. The inquiry may also be sent to *CBPGaugersLabs@cbp.dhs.gov*. Please reference the Web site listed below for a complete listing of CBP approved gaugers and accredited laboratories.

http://www.cbp.gov/about/labs-scientific/commercial-gaugers-and-laboratories.

Dated: November 29, 2016.

Ira S. Reese,

Executive Director, Laboratories and Scientific Services Directorate.

[FR Doc. 2016–29155 Filed 12–5–16; 8:45 am]

BILLING CODE 9111–14–P

DEPARTMENT OF HOMELAND SECURITY

U.S. Customs and Border Protection

Accreditation and Approval of Camin Cargo Control, Inc., as a Commercial Gauger and Laboratory

AGENCY: U.S. Customs and Border Protection, Department of Homeland Security.

ACTION: Notice of accreditation and approval of Camin Cargo Control, Inc., as a commercial gauger and laboratory.

SUMMARY: Notice is hereby given, pursuant to CBP regulations, that Camin Cargo Control, Inc., has been approved to gauge and accredited to test petroleum and certain petroleum products for customs purposes for the next three years as of July 13, 2016.

DATES: *Effective Dates:* The accreditation and approval of Camin Cargo Control, Inc., as commercial gauger and laboratory became effective on July 13, 2016. The next triennial inspection date will be scheduled for July 2019.

FOR FURTHER INFORMATION CONTACT: Approved Gauger and Accredited Laboratories Manager, Laboratories and Scientific Services Directorate, U.S. Customs and Border Protection, 1300 Pennsylvania Avenue NW., Suite 1500N, Washington, DC 20229, tel. 202–344–1060.

SUPPLEMENTARY INFORMATION: Notice is hereby given pursuant to 19 CFR 151.12 and 19 CFR 151.13, that Camin Cargo Control, Inc., 1800 Dabney Dr., Pasadena, TX 77502, has been approved to gauge and accredited to test petroleum and certain petroleum products for customs purposes, in accordance with the provisions of 19 CFR 151.12 and 19 CFR 151.13. Camin Cargo Control, Inc., is approved for the following gauging procedures for petroleum and certain petroleum products set forth by the American Petroleum Institute (API):

API chapters	Title
3	Tank gauging.
4	Proving Systems.
5	Metering.
7	Temperature Determination.
8	Sampling.
11	Physical Properties Data.
12	Calculations.
17	Maritime Measurements.

Camin Cargo Control, Inc., is accredited for the following laboratory analysis procedures and methods for petroleum and certain petroleum products set forth by the U.S. Customs and Border Protection Laboratory Methods (CBPL) and American Society for Testing and Materials (ASTM):

CBPL No.	ASTM	Title
27–01	D287	Standard Test Method for API Gravity of crude Petroleum and Petroleum Products.
27–03	D4006	Standard Test Method for Water in Crude Oil by Distillation.
27–04	D95	Standard Test Method for Water in Petroleum Products and Bituminous Materials by Distillation.
27–05	D4928	Standard Test Method for Water in Crude Oils by Coulometric Karl Fischer Titration.
27–08	D86	Standard Test Method for Distillation of Petroleum Products.
27–11	D445	Standard Test Method for Kinematic Viscosity of Transparent and Opaque Liquids.
27–13	D4294	Standard Test Method for Sulfur in Petroleum and Petroleum Products by Energy-Dispersive X-ray Fluorescence Spectrometry.
27–14	D2622	Standard Test Method for Sulfur in Petroleum Products.
27–48	D4052	Standard Test Method for Density and Relative Density of Liquids by Digital Density Meter.
27–50	D93	Standard Test Methods for Flash-Point by Pensky-Martens Closed Cup Tester.
27–57	D7039	Standard Test Method for Sulfur in Gasoline and Diesel Fuel by Monochromatic Wavelength Dispersive X-Ray Fluorescence Spectrometry.
27–58	D5191	Standard Test Method For Vapor Pressure of Petroleum Products.

Anyone wishing to employ this entity to conduct laboratory analyses and gauger services should request and receive written assurances from the entity that it is accredited or approved by the U.S. Customs and Border Protection to conduct the specific test or gauger service requested. Alternatively, inquiries regarding the specific test or gauger service this entity is accredited or approved to perform may be directed to the U.S. Customs and Border Protection by calling (202) 344–1060. The inquiry may also be sent to *cbp.labhq@dhs.gov.* Please reference the Web site listed below for the current CBP Approved Gaugers and Accredited Laboratories List.

http://www.cbp.gov/about/labs-scientific/commercial-gaugers-and-laboratories.

Dated: November 29, 2016.

Ira S. Reese,

Executive Director, Laboratories and Scientific Services Directorate.

[FR Doc. 2016–29156 Filed 12–5–16; 8:45 am]

BILLING CODE 9111–14–P

DEPARTMENT OF HOMELAND SECURITY

Transportation Security Administration

Intent To Request Approval From OMB of One New Public Collection of Information: Travel Request and Expense Report Form for TSA Contractors

AGENCY: Transportation Security Administration, DHS.

ACTION: 60-day notice.

SUMMARY: The Transportation Security Administration (TSA) invites public comment on a new Information Collection Request (ICR) abstracted below that we will submit to the Office of Management and Budget (OMB) for approval in compliance with the Paperwork Reduction Act (PRA). The ICR describes the nature of the information collection and its expected burden. The collection involves the submission of travel request and reimbursement information by TSA contractors to the Contracting Officer Representative (COR) for their approval. A TSA contractor will submit the form prior to and upon return from travel.

DATES: Send your comments by February 6, 2017.

ADDRESSES: Comments may be emailed to *TSAPRA@tsa.dhs.gov* or delivered to the TSA PRA Officer, Office of Information Technology (OIT), TSA–11, Transportation Security Administration, 601 South 12th Street, Arlington, VA 20598–6011.

FOR FURTHER INFORMATION CONTACT: Contact Christina Walsh at the above address, or by telephone (571) 227–2062.

SUPPLEMENTARY INFORMATION:

Comments Invited

In accordance with the Paperwork Reduction Act of 1995 (44 U.S.C. 3501 *et seq.*), an agency may not conduct or sponsor, and a person is not required to respond to, a collection of information unless it displays a valid OMB control number. The ICR documentation is available at *http://www.reginfo.gov.* Therefore, in preparation for OMB review and approval of the following information collection, TSA is soliciting comments to—

(1) Evaluate whether the proposed information requirement is necessary for the proper performance of the functions of the agency, including whether the information will have practical utility;

(2) Evaluate the accuracy of the agency's estimate of the burden;

(3) Enhance the quality, utility, and clarity of the information to be collected; and

(4) Minimize the burden of the collection of information on those who are to respond, including using appropriate automated, electronic, mechanical, or other technological collection techniques or other forms of information technology.

Information Collection Requirement

Purpose of Data Collection

Pursuant to the Federal Travel Regulation (FTR), TSA has authority to implement statutory requirements and policies for travel by Federal civilian employees and others authorized to travel at government expense. *See* FTR, 41 CFR 300. *See also* 5 U.S.C. 5707 (Travel, Transportation, and Subsistence).[1] Consistent with this authority, TSA created the Contractor Travel Request and Expense Report form, TSA Form 308. The form allows a TSA Contracting Officer Representative to preauthorize reimbursable travel for a contractor intending to conduct travel determined to be a reimbursable expense under the contract. Requiring preauthorization for travel ensures the requested travel is within scope of the contract and any costs incurred are in compliance with the FTR. Additionally, the form may be used post-travel to verify that the invoiced-amount is consistent with the preauthorized costs, which ensures government dollars used to fund the travel are not misused and that the government does not overpay for any reimbursable travel.

Description of Data Collection

The data collected on the Contractor Travel Request and Expense Report includes basic identifying information for the individual traveling, such as full name of the traveler, travel date(s) and location(s), departure information,

[1] Visit *www.gsa.gov/federaltravelregulation* for text and other information regarding the FTR. Under the FTR, a Federal traveler is a person who travels on a Government aircraft and who is either: (1) A civilian employee in the Government service; (2) a member of the uniformed or foreign services of the U.S. Government; or (3) a contractor working under a contract with an executive agency. *See* 41 CFR 300–3.1.

justification for travel, all costs associated with the travel, name and contract number for the vendor and signature of the requesting vendor. The travel-related submission policy for the TSA program office using the form will determine whether the person completing and submitting the form is an individual from the vendor's administrative staff or the traveler. The completed form is submitted to the contractor via email or other electronic format and does not require password protection. The data will be collected, as necessary, when travel-related expenses under a contract meet the stipulated requirements for reimbursable-travel. The total annual number of respondents is estimated to be 450 and the annual burden hours is estimated to be 112.5 hours per year.

Use of Results

TSA will use these results as a basis for authorizing travel before departure and as a means to track expenditures for contractor-reimbursable travel. Reviewing the information collected will ensure that travel remains within scope of the contract and that any costs incurred are in compliance with the FTR. By continuing to track the expenditures annually and by contract, TSA can improve budgeting for travel and have a more informed set of requirements for future contracts. Failure to collect this information could lead to unauthorized expenditures by the contractor and/or incorrect budget request submissions.

Dated: November 30, 2016.

Christina Walsh,

TSA Paperwork Reduction Act Officer, Office of Information Technology.

[FR Doc. 2016–29146 Filed 12–5–16; 8:45 am]

BILLING CODE 9110–05–P

DEPARTMENT OF HOUSING AND URBAN DEVELOPMENT

[Docket No. FR 5889–N–03]

Implementation of the Tribal HUD–VA Supportive Housing Program; Technical Correction

AGENCY: Office of the Assistant Secretary for Public and Indian Housing, HUD.

ACTION: Notice, technical correction.

SUMMARY: On October 21, 2015, HUD published in the **Federal Register** a notice that set forth the policies and procedures for the administration of a supportive housing and rental demonstration called the Tribal HUD–VA Supportive Housing program (Tribal HUD–VASH). Today's **Federal Register** notice makes technical corrections to the October 21, 2015, notice to clarify the program's intent and to address various issues that have risen during the implementation of the program.

DATES: *Effective Date:* December 6, 2016.

FOR FURTHER INFORMATION CONTACT: Heidi J. Frechette, Deputy Assistant Secretary, Office of Native American Programs, Office of Public and Indian Housing, Department of Housing and Urban Development, 451 7th Street SW., Room 4126, Washington, DC, 20410, telephone number (202) 402–7914. (This is not a toll-free number.) Hearing- or speech-impaired individuals may access this number via TTY by calling the toll-free Federal Relay Service at 1–800–877–8339.

SUPPLEMENTARY INFORMATION:

I. Background

On October 21, 2015 (80 FR 63822), HUD published in the **Federal Register** a notice that set forth the policies and procedures for the administration of a supportive housing and rental demonstration called the Tribal HUD–VASH. As described in the October 21, 2015, notice, HUD made $4 million in grant funding available to Indian tribes and tribally designated housing entities (TDHEs) to fund this rental assistance and associated administrative fees. Under Tribal HUD–VASH, Indian tribes and TDHEs participating must partner with the Department of Veterans Affairs (VA) to provide healthcare assistance to eligible Native American veterans. On March, 2, 2016 at 81 FR 10880, HUD published a notice in the **Federal Register** that announced the availability of additional funding for Tribal HUD–VASH and the tribes/TDHEs selected for the program. In total, 26 tribes/TDHEs were awarded $5.9 million in funding.

The purpose of this notice is to make technical corrections to the October 21, 2015, **Federal Register** notice detailing the Implementation of the Tribal HUD–VA Supportive Housing Program to clarify the program's intent and to address issues that have risen during the implementation of the program.

II. Technical Corrections

A. Section II. Definitions

A review of this section has caused HUD to add a definition of ''privately-owned housing.'' HUD is adding this definition to clarify the difference between privately-owned housing and tribally-owned housing since it is possible for a housing unit owned by the tribe to be leased by a Tribal HUD–VASH Veteran participant. Accordingly, on page 63823 under section II, captioned ''Definitions,'' HUD corrects the October 21, 2015, notice by adding alphabetically the definition of ''privately-owned housing to read as follows:

Privately-owned housing—Privately-owned housing is any unit not directly owned by the Tribal HUD–VASH grantee. Accordingly, in situations where the TDHE is the Tribal HUD–VASH grantee, but the unit is owned by another tribal organization (such as the tribe), the unit would be considered privately-owned for purposes of this program.

B. Section VI. Subsection B. (Native American Veteran Eligibility)

1. HUD's review of Section VI.B. of the October 21, 2015, notice revealed a lack of clarity in determining income eligibility for program participants. Accordingly, on page 63826 under section VI.B.4., HUD corrects the October 21, 2015, notice by replacing the second sentence of paragraph 4.b. to read as follows:

''To be eligible, a Veteran household's annual income must be no more than 80 percent of the greater of the median income for the Indian area, or the median income for the United States as prescribed by Section 4(15) of NAHASDA.''

2. Additionally, HUD is providing a new section under item 4.c. to provide tribes/TDHE's with information about the exclusion of certain Veteran's benefits from income calculations to read as follows. Accordingly, on page 63826 under section VI.B.4.c, HUD corrects the October 21, 2015, notice by adding new paragraph to read as follows:

''Annual income is used to determine program eligibility under NAHASDA. Per PIH Notice 2011–15, Veteran compensation for service-connected disability or death under title 38 U.S.C. chapter 11 and dependency and indemnity compensation for service-connected deaths under title 38 U.S.C. chapter 13 are excluded from income. Refer to NAHASDA Program Guidance 2013–05 for more information on calculating income.''

C. Section VI. Subsection H. (Rent)

HUD has determined it needs to revise section VI.H. to establish guidelines determining unit bedroom size for the program and clarify how to determine the amount of rental assistance when, the bedroom sizes of the available housing stock exceed the Veteran family's need for bedrooms. Accordingly, on page 63827 under section VI.H., HUD corrects the October 21, 2015, notice by redesignating

paragraph H. to be H.1. and by adding paragraph H.2. to read as follows:

''2. Bedroom size must be determined based on the number of family members living in the household, not on the number of bedrooms in the unit to be rented. Guidelines for determining unit size are one bedroom for each two persons within the household, except:

a. Persons of the opposite sex (other than spouses, and children under age 5) are not required to share a bedroom;

b. Persons of different generations are not required to share a bedroom;

c. Live-in aides must be allocated a separate bedroom. No additional bedrooms will be provided for the live-in aide's family; and

d. Single person families must be allocated zero or one bedroom.

Therefore, in situations where the available housing has more bedrooms than necessary for the family size and composition, the rental assistance payment must be limited to the number of bedrooms based on the guidelines listed above. If a grantee chooses to ''over house'' a Veteran family by placing the family in a larger unit than the family requires under the above guidelines, the maximum amount of Tribal HUD–VASH funds that can be used to house the Veteran family is the rent for a unit sized in accordance with the guidelines, and in accordance with Section VI., subsection H of this notice. Any additional rental costs due to over housing cannot be funded with Tribal HUD–VASH or regular Indian Housing Block Grant (IHBG) funds, but can be funded by other resources. In addition, Tribes/TDHEs may want to consider shared housing arrangements in situations where appropriate-sized housing is limited, but where individual Veterans could have a separate bedroom and share common areas.''

D. Section VI. Subsection L (Affordability Periods and Binding Commitments)

HUD has determined that this subsection is too restrictive when project-based housing is being used to house eligible homeless Native American Veterans. As a result, HUD is removing this requirement and deleting Section VI.L of the October 21, 2015, Notice.

Dated: November 28, 2016.

Lourdes Castro Ramírez,

Principal Deputy Assistant Secretary for Public and Indian Housing.

[FR Doc. 2016–29211 Filed 12–5–16; 8:45 am]

BILLING CODE 4210–67–P

DEPARTMENT OF HOUSING AND URBAN DEVELOPMENT

24 CFR Chapter V

[Docket No. FR–5976–C–04]

Housing Opportunity Through Modernization Act of 2016: Initial Guidance; Correction

AGENCY: Office of General Counsel, HUD.

ACTION: Initial implementation guidance; correction.

SUMMARY: On October 24, 2016, HUD published implementation guidance for the Housing Opportunity Through Modernization Act. In that document, HUD inadvertently published the incorrect implementation information for changes regarding the Self-Help Homeownership Opportunity Program (SHOP). This notice corrects that information.

DATES: *Effective Date:* The effective date for the implementation guidance of October 24, 2016 is unchanged.

FOR FURTHER INFORMATION CONTACT: With respect to this supplementary document, contact Ariel Pereira, Associate General Counsel for Legislation and Regulations, Department of Housing and Urban Development, 451 7th Street SW., Room 10238, Washington, DC 20410; telephone number 202–708–1793 (this is not a toll-free number). Persons with hearing or speech impairments may access this number through TTY by calling the toll-free Federal Relay Service at 800–877–8339.

SUPPLEMENTARY INFORMATION:

I. Introduction

On October 24, 2016, HUD published a document advising the public on HUD's implementation plans for the Housing Opportunity Through Modernization Act (HOTMA) (Pub. L. 114–201). That document inadvertently contained inaccurate implementation information for changes relating to SHOP. This correction replaces that inaccurate information with the corrected information.

II. Correction

In document FR–5897–N–01, published October 24, 2016 (81 FR 73030), make the following correction: On page 73032, in the first column, replace the implementation action for section 502 with the following paragraph:

Implementation action: This provision was effective upon enactment of HOTMA. The Fiscal Year 2016 SHOP Notice of Funding Availability states that due to this provision, all applicants are strongly encouraged, but not required, to use ENERGY STAR-labeled appliances and products. Applicants are also strongly encouraged, but not required, to meet the standard for ENERGY STAR Certified New Homes (single-family homes and low-rise multifamily properties up to three stories), or for ENERGY STAR Multifamily High Rise (four or more stories).

Dated: December 1, 2016.

Ariel Pereira,

Associate General Counsel for Legislation and Regulations.

[FR Doc. 2016–29208 Filed 12–5–16; 8:45 am]

BILLING CODE 4210–67–P

DEPARTMENT OF HOUSING AND URBAN DEVELOPMENT

[Docket No. FR–5985–N–01]

HUD Program Evaluation Policy—Policy Statement

AGENCY: Office of the Assistant Secretary for Policy Development and Research, HUD.

ACTION: Notice.

SUMMARY: This policy statement of HUD's Office of Policy Development and Research articulates the core principles and practices of the office's evaluation and research activities. This policy reconfirms the Department's commitment to conducting rigorous, relevant evaluations and to using evidence from evaluations to inform policy and practice.

DATES: December 6, 2016.

FOR FURTHER INFORMATION CONTACT: Mark D. Shroder, Associate Deputy Assistant Secretary, Office of Research, Evaluation, and Monitoring, Office of Policy Development and Research, U.S. Department of Housing and Urban Development, 451 7th Street SW., Washington, DC 20410, telephone (202) 402–5922. The listed telephone number is not a toll-free number. Persons with hearing- or speech-impairments may access this number through TTY by calling Federal Relay Service at 1–800–877–8339 (this is a toll-free number).

SUPPLEMENTARY INFORMATION:

I. Background

The mission of HUD's Office of Policy Development and Research (PD&R) is to inform HUD policy development and implementation to improve life in American communities through conducting, supporting, and sharing research, surveys, demonstrations,

program evaluations, and best practices. Within HUD, PD&R is responsible for nearly all program evaluations. The office provides reliable and objective data and analysis to help inform policy decisions. Program evaluation has been a core activity of PD&R since its formation in 1974.

In July 2016, the Government Accountability Office (GAO) issued a report entitled ''Department of Housing and Urban Development: Actions Needed to Incorporate Key Practices into Management Functions and Program Oversight,'' (GAO 16–497) in which GAO presented a broad assessment of HUD's management of its operations and programs.[1] In the report, GAO examined HUD efforts to: (1) Meet Federal requirements and implement key practices for management functions, including performance planning and reporting, human capital, financial, acquisition, and information technology (IT) management; and (2) oversee and evaluate programs.

PD&R is the primary office within HUD responsible for data analysis, research, program evaluations, and policy studies that inform the development and implementation of programs and policies across HUD offices. PD&R undertakes program evaluations, often by using a process that includes convening expert panels. However, GAO found that PD&R had not developed agency-wide, written policies for its program evaluations, nor documented the criteria used to select the expert panels and review the quality of program evaluations.

This policy statement responds to the GAO report by setting out the core principles and practices of PD&R's evaluation and research activities. This statement incorporates some language from a policy statement by the Office of Policy, Research, and Evaluation of the Administration for Children and Families of the U.S. Department of Health and Human Services.

II. HUD Program Evaluation Policy

PD&R has identified the following core principles and practices as fundamental to ensuring high-quality and consistent evaluation results: rigor, relevance, transparency, independence, ethics, and technical innovation. This policy applies to all PD&R-sponsored evaluations and economic analyses of regulations; they apply as well to the selection of projects, contractors, and PD&R staff that is involved in evaluations.

[1] See *http://www.gao.gov/assets/680/678551.pdf.*

Rigor

PD&R is committed to using the most rigorous methods that are appropriate to the evaluation questions and feasible within budget and other constraints. Rigor is not restricted to impact evaluations, but is also necessary in implementation or process evaluations, descriptive studies, outcome evaluations, and formative evaluations; and in both qualitative and quantitative approaches. Rigor requires ensuring that inferences about cause and effect are well founded (internal validity); requires clarity about the populations, settings, or circumstances to which results can be generalized (external validity); and requires the use of measures that accurately capture the intended information (measurement reliability and validity).

In assessing the effects of programs or services, PD&R evaluations use methods that isolate to the greatest extent possible the impacts of the programs or services from other influences such as trends over time, geographic variation, or pre-existing differences between participants and non-participants. For such causal questions, experimental approaches are preferred. When experimental approaches are not feasible, PD&R uses the most rigorous approach that is feasible. PD&R ensures that contractors and grantees conducting evaluations have appropriate expertise through emphasizing the capacity for rigor in requests for proposal and funding opportunity announcements.

PD&R also employs a strategic human capital development plan to hire, train, and retain a workforce that ensures the staff has the tools and resources to accomplish the mission.

Relevance

The PD&R evaluation agenda reflects the legislative requirements and policy issues related to HUD's mission. PD&R solicits input from stakeholders, both internal and external, on the selection of programs to be evaluated, initiatives, demonstrations, and research questions. For new initiatives and demonstrations in particular, evaluations will be more feasible and useful when planned in advance, in concert with the development of the initiative or demonstration, rather than as an afterthought.

PD&R disseminates findings in ways that are accessible and useful to policy-makers and practitioners. PD&R partners with other HUD program offices to inform internal and external stakeholders through disseminating evidence from PD&R-sponsored evaluations.

Transparency

PD&R will release methodologically valid evaluations without regard to the findings. Evaluation reports must describe the methods used, including strengths and weaknesses, and discuss the generalizability of the findings. Evaluation reports must present comprehensive results, including favorable, unfavorable, and null findings.

PD&R publishes a 5-year Research Roadmap that outlines the research and evaluation that we believe would be of greatest value to public policy. PD&R lists all ongoing evaluation projects at the *HUDUSER.gov* Web site, and updates it monthly. PD&R will release evaluation results timely, usually within 4 months of receiving the final report.

PD&R will, where possible, archive evaluation data for secondary use by interested researchers. PD&R typically builds requirements into contracts to prepare data sets for secondary use.

Independence

Independence and objectivity are core principles of evaluation. Agency and program leadership, program staff, service providers, and others participate actively in setting evaluation priorities, identifying evaluation questions, and assessing the implications of findings. However, it is important to insulate evaluation functions from undue influence and from both the appearance and the reality of bias. To promote objectivity, PD&R protects independence in the design, conduct, and analysis of evaluations. To this end:

- PD&R conducts evaluations through the competitive award of grants and contracts to external experts who are free from conflicts of interest.
- PD&R also conducts evaluations in-house and supports unsolicited external evaluation proposals with funding, data, or both.
- The Assistant Secretary for PD&R has authority to approve the design of evaluation projects and analysis plans; and has authority to approve, release, and disseminate evaluation reports. The Assistant Secretary does so, in consultation with career staff.

Ethics

PD&R-sponsored evaluations must be conducted in an ethical manner and safeguard the dignity, rights, safety, and privacy of participants. PD&R-sponsored evaluations must comply with both the spirit and the letter of relevant requirements such as regulations governing research involving human subjects. In particular, PD&R protects the privacy of HUD-assisted households

and HUD-insured borrowers through the Rule of Eleven; that is, PD&R allows no disclosure of information about the characteristics of any group of individuals or households numbering less than eleven by PD&R staff, contractors, grantees, or licensees.

Technical Innovation

PD&R supports and employs new methods of data collection and analysis that more reliably and efficiently answer research questions than old methods do.

Application of These Principles to Economic Analysis of Regulations

Economic analysis of regulations, properly conducted, is a critical tool in improving public policy. In any PD&R Regulatory Impact Analysis:

- PD&R analyzes whether the issues addressed by the regulation stem from a market failure, government failure, or other systemic problem, and whether the regulation addresses the root causes of those problems.
- PD&R uses and as necessary produces the best objective estimates of the benefits, costs, and transfers resulting from the regulation, taking into account gaps and uncertainties in the available data.
- Where clear alternatives to the regulatory actions exist, PD&R objectively estimates the benefits, costs, and transfers of those alternatives as well.

Dated: November 30, 2016.

Katherine O'Regan,

Assistant Secretary for Policy Development and Research.

[FR Doc. 2016–29215 Filed 12–5–16; 8:45 am]

BILLING CODE 4210–67–P

DEPARTMENT OF THE INTERIOR

Fish and Wildlife Service

[FWS–R8–ES–2016–N127; FF08EVEN00–FXFR1337088SSO0]

Marine Mammal Protection Act; Stock Assessment Report for the Southern Sea Otter in California

AGENCY: Fish and Wildlife Service, Interior.

ACTION: Notice of availability; request for comments.

SUMMARY: In accordance with the Marine Mammal Protection Act of 1972, as amended, and its implementing regulations, we, the U.S. Fish and Wildlife Service (Service), have developed a draft revised marine mammal stock assessment report (SAR) for the southern sea otter stock in the State of California. We now make the draft SAR available for public review and comment.

DATES: We will consider comments that are received or postmarked on or before March 6, 2017.

ADDRESSES: If you wish to review the draft revised SAR for southern sea otter, you may obtain a copy from our Web site at *http://www.fws.gov/ventura.* Alternatively, you may contact the Ventura Fish and Wildlife Office, 2493 Portola Road, Suite B, Ventura, CA 93003 (telephone: 805–644–1766). If you wish to comment on the SAR, you may submit your comments in writing by any one of the following methods:

- *U.S. mail:* Field Supervisor, at the above address;
- *Hand delivery:* Ventura Fish and Wildlife Office at the above address;
- *Fax:* 805–644–3958; or
- *Email: fw8ssostock@fws.gov.*

FOR FURTHER INFORMATION CONTACT: Lilian Carswell, at the above street address, by telephone (805–612–2793), or by email (*Lilian_Carswell@fws.gov*).

SUPPLEMENTARY INFORMATION: We announce the availability for review and comment of a draft revised marine mammal stock assessment report (SAR) for the southern sea otter (*Enhydra lutris nereis*) stock in the State of California.

Background

Under the Marine Mammal Protection Act of 1972, as amended (MMPA; 16 U.S.C. 1361 *et seq.*), and its implementing regulations in the Code of Federal Regulations (CFR) at 50 CFR part 18, we regulate the taking; import; and, under certain conditions, possession; transportation; purchasing; selling; and offering for sale, purchase, or export, of marine mammals. One of the MMPA's goals is to ensure that stocks of marine mammals occurring in waters under U.S. jurisdiction do not experience a level of human-caused mortality and serious injury that is likely to cause the stock to be reduced below its *optimum sustainable population level* (OSP). OSP is defined under the MMPA as ''the number of animals which will result in the maximum productivity of the population or the species, keeping in mind the carrying capacity of the habitat and the health of the ecosystem of which they form a constituent element'' (16 U.S.C. 1362(9)).

To help accomplish the goal of maintaining marine mammal stocks at their OSPs, section 117 of the MMPA requires the Service and the National Marine Fisheries Service (NMFS) to prepare a SAR for each marine mammal stock that occurs in waters under U.S. jurisdiction. A SAR must be based on the best scientific information available; therefore, we prepare it in consultation with established regional scientific review groups. Each SAR must include:

1. A description of the stock and its geographic range;

2. A minimum population estimate, current and maximum net productivity rate, and current population trend;

3. An estimate of the annual human-caused mortality and serious injury by source and, for a strategic stock, other factors that may be causing a decline or impeding recovery;

4. A description of commercial fishery interactions;

5. A categorization of the status of the stock; and

6. An estimate of the *potential biological removal* (PBR) level.

The MMPA defines the PBR as ''the maximum number of animals, not including natural mortalities, that may be removed from a marine mammal stock while allowing that stock to reach or maintain its OSP'' (16 U.S.C. 1362(20)). The PBR is the product of the minimum population estimate of the stock (N_{min}); one-half the maximum theoretical or estimated net productivity rate of the stock at a small population size (R_{max}); and a recovery factor (F_r) of between 0.1 and 1.0, which is intended to compensate for uncertainty and unknown estimation errors. This can be written as:

$$PBR = (N_{min})(\tfrac{1}{2} \text{ of the } R_{max})(F_r)$$

Section 117 of the MMPA also requires the Service and NMFS to review the SARs (a) at least annually for stocks that are specified as strategic stocks, (b) at least annually for stocks for which significant new information is available, and (c) at least once every 3 years for all other stocks. If our review of the status of a stock indicates that it has changed or may be more accurately determined, then the SAR must be revised accordingly.

A *strategic stock* is defined in the MMPA as a marine mammal stock ''(a) for which the level of direct human-caused mortality exceeds the PBR level; (b) which, based on the best available scientific information, is declining and is likely to be listed as a threatened species under the Endangered Species Act of 1973, as amended (16 U.S.C. 1531 *et seq.*) [the ''ESA''], within the foreseeable future; or (c) which is listed as a threatened or endangered species under the ESA, or is designated as depleted under [the MMPA].'' 16 U.S.C. 1362(19).

Stock Assessment Report History for the Southern Sea Otter in California

The southern sea otter SAR was last revised in January 2014. Because the southern sea otter qualifies as a strategic stock due to its listing as a threatened species under the ESA, the Service has reviewed the stock assessment annually since then. In January 2015, Service review concluded that revision was not warranted because the status of the stock had not changed, nor could it be more accurately determined. However, upon review in 2016, the Service determined that revision was warranted because of changes in population dynamics in the central portion of the mainland range and new information on fishery-related sea otter mortality.

Summary of Draft Revised Stock Assessment Report for the Southern Sea Otter in California

The following table summarizes some of the information contained in the draft revised southern sea otter SAR, which includes the stock's N_{min}, R_{max}, F_r, PBR, annual estimated human-caused mortality and serious injury, and status. After consideration of any public comments we receive, the Service will revise and finalize the SAR, as appropriate. We will publish a notice of availability and summary of the final SAR, including responses to submitted comments.

SUMMARY—DRAFT REVISED STOCK ASSESSMENT REPORT, SOUTHERN SEA OTTER IN CALIFORNIA

Southern sea otter stock	N_{MIN}	R_{MAX}	F_R	PBR	Annual estimated human-caused mortality and serious injury	Stock status
Mainland	2,990	0.06	0.1	8.97	Figures by specific source, where known, are provided in the SAR.	Strategic.
San Nicolas Island	64	0.13	0.1	0.42		
Summary	3,054			9		

Public Availability of Comments

Before including your address, phone number, email address, or other personal identifying information in your comment, you should be aware that your entire comment—including your personal identifying information—may be made publicly available at any time. While you can ask us in your comment to withhold your personal identifying information from public review, we cannot guarantee that we will be able to do so.

References

In accordance with the MMPA, we include in this notice a list of the information sources and public reports upon which we based the SAR:

Babcock, E.A., E.K. Pikitch, and C.G. Hudon. 2003. How much observer coverage is enough to adequately estimate bycatch? Pew Institute for Ocean Science and Oceana, 36 pp.

Bacon, C.E. 1994. An ecotoxicological comparison of organic contaminants in sea otters among populations in California and Alaska. M.S. thesis, University of California, Santa Cruz.

Bacon, C.E., W.M. Jarman, J.A. Estes, M. Simon, and R.J. Norstrom. 1999. Comparison of organochlorine contaminants among sea otter (*Enhydra lutris*) populations in California and Alaska. Environ. Toxicology and Chemistry 18:452–458.

Barlow, J. 1989. Estimating sample size required to monitor marine mammal mortality in California gillnet fisheries. Southwest Fisheries Science Center Administrative Report LJ–89–08, 8 pp.

Bentall, G.B. 2005. Morphological and behavioral correlates of population status in the southern sea otter: a comparative study between central California and San Nicolas Island. Master's Thesis, University of California, Santa Cruz, CA, unpublished.

Burge, C.A., C.M. Eakin, C.S. Friedman, B. Froelich, P.K. Hershberger, E.E. Hofmann, L.E. Petes, K.C. Prager, E. Weil, B.L. Willis, S.E. Ford, and C.D. Harvell. 2014. Climate change influences on marine infectious diseases: implications for management and society. Annual Review of Marine Science 6:249–277.

Bryant, H.C. 1915. Sea otters near Point Sur. California Department of Fish and Game Bulletin. 1:134–135.

Cameron, G.A. and K.A. Forney. 2000. Preliminary estimates of cetacean mortality in California/Oregon gillnet fisheries for 1999. Paper SC/S2/O24 presented to the International Whaling Commission, 2000 (unpublished), 12 pp. Available from NMFS, Southwest Fisheries Science Center, P.O. Box 271, La Jolla, California, 92038.

Carretta, J.V. 2001. Preliminary estimates of cetacean mortality in California gillnet fisheries for 2000. Paper SC/53/SM9 presented to the International Whaling Commission, 2001 (unpublished), 21 pp. Available from NMFS, Southwest Fisheries Science Center, P.O. Box 271, La Jolla, California, 92038.

Conrad P.A., M.A. Miller, C. Kreuder, E.R. James, J. Mazet, H. Dabritz, D.A. Jessup, F. Gulland, M.E. Grigg. 2005. Transmission of toxoplasma: Clues from the study of sea otters as sentinels of *Toxoplasma gondii* flow into the marine environment. International Journal for Parasitology 35:1155–1168.

Cronin, M.A., J. Bodkin, B. Bellachey, J.A. Estes, and J.C. Patton. 1996. Mitochondrial-DNA variation among subspecies and populations of sea otters (*Enhydra lutris*). Journal of Mammalogy 77:546–557.

Dubey, J.P., N.L. Miller, and D.K. Frenkel. 1970. *Toxoplasma gondii* life cycle in cats. Journal of the American Veterinary Medical Association 157:1767–1770.

Estes, J.A. 1990. Growth and equilibrium in sea otter populations. J. Anim. Ecol. 59:385–401.

Estes, J.A. and R.J. Jameson. 1988. A double-survey estimate for sighting probability of sea otters in California. Journal of Wildlife Management 52:70–76.

Estes, J.A., B.B. Hatfield, K. Ralls, and J. Ames. 2003. Causes of mortality in California sea otters during periods of population growth and decline. Marine Mammal Science 19:198–216.

Forney, K.A., S.R. Benson, and G.A. Cameron. 2001. Central California gill net effort and bycatch of sensitive species, 1990–1998. Pages 141–160 *in* Seabird Bycatch: Trends, Roadblocks, and Solutions, E.F. Melvin and J.K. Parrish, eds. Proceedings of an International Symposium of the Pacific Seabird Group, University of Alaska Sea Grant, Fairbanks, Alaska, 212 pp.

Gazeau F., L.M. Parker, S. Comeau, J.-P. Gattuso, W.A. O'Connor, S. Martin, H.-O. Pörtner, and P.M. Ross. 2013. Impacts of ocean acidification on marine shelled molluscs. Marine Biology 160:2207–2245.

Gerber, L.R., M.T. Tinker, D.F. Doak, J.A. Estes, and D.A. Jessup. 2004. Mortality sensitivity in life-stage simulation analysis: A case study of southern sea otters. Ecological Applications 14:1554–1565.

Hatfield, B.B. and J.A. Estes. 2000. Preliminary results of an evaluation of the potential threat to sea otters posed by the nearshore finfish trap fishery. Unpublished, 6 pp. + appendices.

Hatfield, B.B., J.A. Ames, J.A. Estes, M.T. Tinker, A.B. Johnson, M.M. Staedler, and M.D. Harris. 2011. Sea otter mortality in fish and shellfish traps: Estimating potential impacts and exploring possible solutions. Endangered Species Research 13:219–229.

Herrick, S.F. Jr. and D. Hanan. 1988. A review of California entangling net fisheries, 1981–1986. National Oceanic and Atmospheric Administration Technical Memorandum. National Marine Fisheries Service. NOAA–TM–

NMFS–SWFC–108, 39 pp.
Jameson, R.J. 1989. Movements, home range, and territories of male sea otters off central California. Marine Mammal Science 5:159–172.
Jameson, R.J. and S. Jeffries. 1999. Results of the 1999 survey of the Washington sea otter population. Unpublished report, 5 pp.
Jameson, R.J. and S. Jeffries. 2005. Results of the 2005 survey of the reintroduced Washington sea otter population. Unpublished report, 6 pp.
Jessup D.A., M.A. Miller, M. Harris, B.B. Hatfield, and J.A. Estes. 2004. The 2003 southern sea otter (*Enhydra lutris nereis*) unusual mortality event: A preliminary report to NOAA and USFWS. Unpublished report, 38 pp.
Johnson, C.K., M.T. Tinker, J.A. Estes, P.A. Conrad, M. Staedler, M.A. Miller, D.A. Jessup and J.A.K. Mazet. 2009. Prey choice and habitat use drive sea otter pathogen exposure in a resource-limited coastal system. PNAS 106:2242–2247.
Kannan, K., E. Perrotta, and N.J. Thomas. 2006. Association between perfluorinated compounds and pathological conditions in southern sea otters. Environmental Science & Technology 40:4943–4948.
Kannan, K., E. Perrotta, N.J. Thomas, and K.M. Aldous. 2007. A comparative analysis of polybrominated diphenyl ethers and polychlorinated biphenyls in southern sea otters that died of infectious diseases and noninfectious causes. Archives of Environmental Contamination and Toxicology 53:293–302.
Kannan K., K.S. Guruge, N.J. Thomas, S. Tanabe, J.P. Giesy. 1998. Butyltin residues in southern sea otters (*Enhydra lutris nereis*) found dead along California coastal waters. Environmental Science and Technology 32:1169–1175.
Kooyman, G.L. and D.P. Costa. 1979. Effects of oiling on temperature regulation in sea otters. Yearly progress report, Outer Continental Shelf Energy Assessment Program.
Kreuder, C., M.A. Miller, D.A. Jessup, L.J. Lowenstein, M.D. Harris, J.A. Ames, T.E. Carpenter, P.A. Conrad, and J.A.K. Mazet. 2003. Patterns of mortality in southern sea otters (*Enhydra lutris nereis*) from 1998–2001. Journal of Wildlife Diseases 39:495–509.
Kreuder, C., M.A. Miller, L.J. Lowenstine, P.A. Conrad, T.E. Carpenter, D.A. Jessup, and J.A.K. Mazet. 2005. Evaluation of cardiac lesions and risk factors associated with myocarditis and dilated cardiomyopathy in southern sea otters (*Enhydra lutris nereis*). American Journal of Veterinary Research 66:289–299.
Kroeker, K. J., R.L. Kordas, R. N. Crim, and G.G. Singh. 2010. Meta-analysis reveals negative yet variable effects of ocean acidification on marine organisms. Ecology Letters 13:1419–1434.
Kudela, R.M., J.Q. Lane, W.P. Cochlan. 2008. The potential role of anthropogenically derived nitrogen in the growth of harmful algae in California, USA. Harmful Algae 8:103–110.
Kurihara, H., and Y. Shirayama. 2004. Effects of increased atmospheric CO2 on sea urchin early development. Marine Ecology Progress Series 274:161–169.
Kurihara, H., T. Asai, S. Kato, and A. Ishimatsu. 2008. Effects of elevated pCO_2 on early development in the mussel *Mytilus galloprovincialis.* Aquatic Biology 4:225–233.
Laidre, K.L., R.J. Jameson, and D.P. DeMaster. 2001. An estimation of carrying capacity for sea otters along the California coast. Marine Mammal Science 17:294–309.
Larson, S., R. Jameson, J. Bodkin, M. Staedler, and P. Bentzen. 2002. Microsatellite DNA and mitochondrial DNA variation in remnant and translocated sea otter (*Enhydra lutris*) populations. Journal of Mammalogy 83:893–906.
Mayer, K.A., M.D. Dailey, and M.A. Miller. 2003. Helminth parasites of the southern sea otter *Enhydra lutris nereis* in central California: abundance, distribution, and pathology. Diseases of Aquatic Organisms 53:77–88.
Miller, M.A., M.E. Grigg, C. Kreuder, E.R. James, A.C. Melli, P.R. Crosbie, D.A. Jessup, J.C. Boothroyd, D. Brownstein, and P.A. Conrad. 2004. An unusual genotype of *Toxoplasma gondii* is common in California sea otters (*Enhydra lutris nereis*) and is a cause of mortality. International Journal for Parasitology 34:275–284.
Miller, M.A., I.A. Gardner, C. Kreuder, D.M. Paradies, K.R. Worcester, D.A. Jessup, E. Dodd, M.D. Harris, J.A. Ames, A.E. Packham, and P.A. Conrad. 2002. Coastal freshwater runoff is a risk factor for *Toxoplasma gondii* infection of southern sea otters (*Enhydra lutris nereis*). International Journal for Parasitology 32:997–1006.
Miller, M.A., W.A. Miller, P.A. Conrad, E.R. James, A.C. Melli, C.M. Leutenegger, H.A. Dabritz, A.E. Packham, D. Paradies, M. Harris, J. Ames, D.A. Jessup, K. Worcester, M.E. Grigg. 2008. Type X *Toxoplasma gondii* in a wild mussel and terrestrial carnivores from coastal California: new linkages between terrestrial mammals, runoff and toxoplasmosis of sea otters. International Journal for Parasitology 38:1319–1328.
Miller, M.A., R.M. Kudela, A. Mekebri, D. Crane, S.C. Oates, M.T. Tinker, M. Staedler, W.A. Miller, S. Toy-Choutka, C. Domink, D. Hardin, G. Langlois, M. Murray, K. Ward and D.A. Jessup. 2010. Evidence for a novel marine harmful algal bloom: cyanotoxin (Microcystin) transfer from land to sea otters. PLoS ONE 5:e12576.
Monson, D.H., J.A. Estes, J.L. Bodkin, and D.B. Siniff. 2000. Life history plasticity and population regulation in sea otters. Oikos 90:457–468.
Mos, L. 2001. Domoic acid: a fascinating marine toxin. Environmental Toxicology and Pharmacology 9:79–85.
Nakata, H., K. Kannan, L. Jing, N. Thomas, S. Tanabe, and J.P. Giesy. 1998. Accumulation pattern of organochlorine pesticides and polychlorinated biphenyls in southern sea otters (*Enhydra lutris nereis*) found stranded along coastal California, USA. Environmental Pollution 103:45–53.
Ralls, K., T.C. Eagle, and D.B. Siniff. 1996. Movement and spatial use patterns of California sea otters. Canadian Journal of Zoology 74:1841–1849.
Sanchez, M.S. 1992. Differentiation and variability of mitochondrial DNA in three sea otter, *Enhydra lutris,* populations. M.S. Thesis, University of California Santa Cruz.
Siniff, D.B., T.D. Williams, A.M. Johnson, and D.L. Garshelis. 1982. Experiments on the response of sea otters, *Enhydra lutris,* to oil contamination. Biological Conservation 2: 261–272.
Stumpp, M., J. Wren, Frank Melzner, M.C. Thorndyke, and S.T. Dupont. 2011. CO_2 induced seawater acidification impacts sea urchin larval development I: Elevated metabolic rates decrease scope for growth and induce developmental delay. Comparative Biochemistry and Physiology, Part A: Molecular & Integrative Physiology 160:331–340.
Taylor, B.L., M. Scott, J. Heyning, and J. Barlow. 2003. Suggested guidelines for recovery factors for endangered marine mammals. NOAA Technical Memorandum NOAA–TM–NMFS–SWFSC–354.
Tinker, M.T. and B.B. Hatfield. 2015. Southwest U.S. Southern sea otter annual range-wide census results: U.S. Geological Survey Data Release, *http://dx.doi.org/10.5066/F7F47M5C.*
Tinker, M.T., G. Bentall, and J.A. Estes. 2008a. Food limitation leads to behavioral diversification and dietary specialization in sea otters. PNAS 105:560–565.
Tinker, M.T., D.F. Doak, and J.A. Estes. 2008b. Using demography and movement behavior to predict range expansion of the southern sea otter. Ecological Applications 18:1781–1794.
Tinker, M.T., B.B. Hatfield, M.D. Harris, and J.A. Ames. 2015. Dramatic increase in sea otter mortality from white sharks in California. Marine Mammal Science. doi:10.1111/mms.12261.
Tinker, M.T., J.A. Estes, K. Ralls, T.M. Williams, D. Jessup, and D.P. Costa. 2006a. Population Dynamics and Biology of the California Sea Otter (*Enhydra lutris nereis*) at the Southern End of its Range. MMS OCS Study 2006–07. Coastal Research Center, Marine Science Institute, University of California, Santa Barbara, California. MMS Cooperative Agreement Number 14–35–0001–31063.
Tinker, M.T., D.F. Doak, J.A. Estes, B.B. Hatfield, M.M. Staedler, and J. Bodkin. 2006b. Incorporating diverse data and realistic complexity into demographic estimation procedures for sea otters. Ecological Applications 16:2293–2312.
Tinker, M.T., D. Jessup, M. Staedler, M. Murray, M. Miller, T. Burgess, E. Bowen, K. Miles, J. Tomoleoni, N. Thometz, L. Tarjan, E. Golson, F. Batac, E. Dodd, E. Berberich, J. Kunz, G. Bentall, T. Nicholson, S. Newsome, H. MacCormick, A. Melli, A. Johnson, L. Henkel, C. Kreuder-Johnson, and P. Conrad. 2013.

Sea otter population biology at Big Sur and Monterey California: investigating the consequences of resource abundance and anthropogenic stressors for sea otter recovery. Draft Final Report to California Coastal Conservancy and U.S. Fish and Wildlife Service. University of California, Santa Cruz, 243 pp.

U.S. Fish and Wildlife Service. 2003. Final Revised Recovery Plan for the Southern Sea Otter (*Enhydra lutris nereis*). Portland, Oregon, xi + 165 pp.

U.S. Fish and Wildlife Service. 2015. Southern Sea Otter (*Enhydra lutris nereis*) 5-Year Review: Summary and Evaluation. Ventura, California. 42 pp.

Valentine, K., D.A. Duffield, L.E. Patrick, D.R. Hatch, V.L. Butler, R.L. Hall, and N. Lehman. 2008. Ancient DNA reveals genotypic relationships among Oregon populations of the sea otter (*Enhydra lutris*). Conservation Genetics 9:933–938.

Vezie, C., J. Rapala, J. Vaitomaa, J. Seitsonen, and K. Sivonen. 2002. Effect of nitrogen and phosphorus on growth of toxic and nontoxic *Microcystis* strains and on intracellular microcystin concentrations. Microbial Ecology 43:443–454.

Walther, G.-R, E. Post, P. Convey, A. Menzel, C. Parmesank, T.J.C. Beebee, J.-M. Fromentin, O. Hoegh-Guldberg, and F. Bairlein. 2002. Ecological responses to recent climate change. Nature 416:389–395.

Wendell, F.E., R.A. Hardy, and J.A. Ames. 1986. An assessment of the accidental take of sea otters, *Enhydra lutris,* in gill and trammel nets. California Department of Fish and Game, Mar. Res. Tech. Rep. No. 54, 31 pp.

Wilson, D.E., M.A. Bogan, R.L. Brownell, Jr., A.M. Burdin, and M.K. Maminov. 1991. Geographic variation in sea otters, *Enhydra lutris.* Journal of Mammalogy 72:22–36.

Authority: The authority for this action is the Marine Mammal Protection Act of 1972, as amended (16 U.S.C. 1361 et al.).

Dated: November 23, 2016.

James W. Kurth,

Director, U.S. Fish and Wildlife Service.

[FR Doc. 2016–29190 Filed 12–5–16; 8:45 am]

BILLING CODE 4333–15–P

DEPARTMENT OF THE INTERIOR

Bureau of Land Management

[15XL LLIDB03000 LF3100000 DD0000 LFHFFR650000 241A 4500078680]

Notice of Intent To Prepare an Environmental Impact Statement for the Proposed Tri-State Fuel Breaks Project, Owyhee County, ID, and Malheur County, OR

AGENCY: Bureau of Land Management, Interior.

ACTION: Notice.

SUMMARY: In compliance with the National Environmental Policy Act of 1969, as amended (NEPA), the Federal Land Policy and Management Act of 1976, as amended, and the National Historic Preservation Act of 1966, as amended (NHPA), the Bureau of Land Management (BLM) Boise District Office, Boise, Idaho, and the Vale District Office, Vale, Oregon, will prepare an Environmental Impact Statement (EIS) for a landscape level fuel break project located in Owyhee County, Idaho, and Malheur County, Oregon.

DATES: This notice initiates the public scoping process for the EIS. Comments on issues may be submitted in writing until January 5, 2017. Any scoping meetings will be announced at least 15 days in advance through local media, and online at *www.blm.gov/id* and at *www.blm.gov/or.* To be most helpful in the preparation of the Draft EIS, comments must be postmarked, faxed, or submitted electronically by the close of the 30-day scoping period or 15 days after the last public meeting, whichever is later. The BLM will provide additional opportunities for public involvement upon publication of the Draft EIS.

ADDRESSES: Submit comments related to the Tri-state Fuel Breaks Project by any of the following methods:

- *Email: blm_id_tristate@blm.gov*
- *Fax:* 208–384–3489
- *Mail:* 3948 South Development Ave., Boise, ID 83705

Documents pertinent to this proposal may be examined at the BLM Boise District Office located at the above address and the BLM Vale District Office, 100 Oregon Street, Vale, OR 97918.

FOR FURTHER INFORMATION CONTACT: Lance Okeson, Project Lead, Fuels Assistant Fire Management Officer; telephone: 208–384–3300; address: 3948 South Development Ave., Boise, ID 83705; email: *blm_id_tristate@blm.gov.* Contact Mr. Okeson to add your name to our mailing list. Persons using a telecommunications device for the deaf (TDD) may call the Federal Relay Service (FRS) at (800) 877–8339. The FIRS is available 24 hours a day, 7 days a week, to leave a message or question for Mr. Okeson. You will receive a reply during normal business hours.

SUPPLEMENTARY INFORMATION: Southwest Idaho, southeast Oregon, and northern Nevada (the Tri-state area) comprise one of the largest intact areas of Greater Sage-grouse (GRSG) habitat in the Northern Great Basin. The shrub-steppe ecosystem within this area is also one of the most imperiled ecosystems in the United States. The U.S. Fish and Wildlife Service identified the Northern Great Basin as a Priority Area for Conservation (PAC) in its 2013 Conservation Objectives Team Report due to the threat of wildfire, invasive annual grasses, and conifer expansion. Management of wildfire has been identified as one of the key issues for maintaining sage-grouse populations in sagebrush-dominated landscapes. Secretarial Order 3336 calls for ''. . . an increased focus to suppressing wildfire in highly valuable portions of sagebrush steppe ecosystem to reduce the loss of critically important greater sage-grouse habitat . . . .'' The 2010 Rapid Eco-regional Assessment of the Northern Basin and Range and Snake River Plain identified the Tri-state area as being at high risk for large-scale wildfires.

Wildfires in this remote area can grow quickly and affect hundreds of thousands of acres of sage-grouse habitat within a matter of days. The 2012 Long Draw Fire (558,198 acres), the 2014 Buzzard Complex Fire (395,747 acres), and the 2015 Soda Fire (285,360 acres), all in or near the project area, each had multiple hundred thousand-acre runs in a single burning period, at rates of spread between 10 and 15 miles per hour.

Tri-State Strategy

The Tri-state Strategy is being developed as an integrated approach to protecting valuable, intact sage-grouse habitat from the threat of wildfire in the Tri-state area. There are several components to the strategy: Coordinating wildfire suppression per the Idaho-Oregon-Nevada Tri-state Local Operating Plan; applying existing and future travel management planning decisions for road access and maintenance, which are essential for fire suppression operations; applying national and local wildfire suppression policies and directives that prioritize protection of important habitats; assessing strategic pre-positioning locations of suppression resources, necessary infrastructure additions and funding sources needed to shorten response times; and implementing the Tri-state Fuel Breaks Project, which is the subject of this notice.

Purpose and Need

The Tri-state area provides important sage-grouse habitat. There is a high potential for large wildfires in the Tri-state area due to its remoteness, continuous fuels (*i.e.,* intact sagebrush and understory), and limited sites for firefighters to establish safe anchor points (*i.e.,* secure locations for firefighters to engage a fire without the chance of being outflanked by the fire).

Therefore, strategic measures must be taken to protect habitat in this area.

Lightning-caused wildfires in the Tri-state area generally involve multiple, simultaneous ignitions, which exhaust fire suppression resources quickly. Constructing fuel breaks—gaps in combustible material (*i.e.,* vegetation) that slow or stop progress of a wildfire—by manipulating vegetation strategically along roads is a proactive measure to protect this important area for species' habitat. Strategically placed fuel breaks across district and State boundaries enhance fire suppression efforts by providing tactical and logistical opportunities, compartmentalizing areas between fuel breaks to constrain wildfires into more manageable units, and minimizing fire spread. Fuel breaks provide fire suppression resources with opportunities to safely engage wildfires and to be more effective across a larger area with fewer resources.

Goals of the Tri-State Fuel Breaks Project

- Develop, maintain, and utilize fuel breaks to conserve and protect sage-grouse and sagebrush-obligate species' habitat across southwest Idaho and southeast Oregon, and to integrate with similar, existing fuel breaks in northern Nevada;
- Compartmentalize areas between fuel breaks to help contain large wildfires across the Tri-state landscape and district boundaries;
- Provide optimal anchor points for firefighters to safely engage wildfires;
- Reduce the risk of sagebrush community conversion to annual grasslands from repeated wildfire;
- Reduce spread of invasive plant species along fuel break/transportation corridors; and
- Coordinate with current and ongoing travel management planning and implementation to ensure fire personnel have access to fuel breaks.

Proposed Action

The BLM Boise and Vale Districts propose to create a strategic system of fuel breaks spanning State and BLM District boundaries by manipulating vegetation adjacent to existing roads. Proposed fuel break design considerations for this draft EIS will include:

- Reduction of highly combustible vegetation such as invasive annual grasses through chemical and/or mechanical treatments;
- Seeding areas with native and/or non-native plant species that retain a higher moisture content into the dry periods of the year or are naturally less combustible;
- Mechanical treatments that reduce the height of existing vegetation to slow fire growth and reduce flame length; or
- A combination of all the above.

Fuel breaks would be developed in a 3.6 million-acre project area within the BLM Vale and Boise Districts and would tie in with an existing fuel break network in the BLM Elko and Winnemucca Districts in Nevada. The BLM identified approximately 1,600 miles of primary roads during preliminary reconnaissance that may be suitable for fuel break development.

Fuel breaks would be established adjacent to existing roads only, focusing on main/primary travel routes. These routes would be maintained to the full extent consistent with and under the authority of current approved road maintenance prescriptions and, when completed, travel management decisions would ensure suppression resources have access to fuel breaks in a timely manner. The proposed fuel break system would reduce fuel loads adjacent to these roads through mechanical and/or chemical treatments. Fuel breaks would be maintained over the long term on a set schedule (depending on the types of treatments employed and fuel break condition monitoring) to ensure their continued effectiveness and to minimize the potential for invasive species proliferation.

The BLM has completed a conformance review of the proposed project, and all actions considered in the alternatives in the draft EIS will be in conformance with the RMPs for the Owyhee Field Office and public lands in the project area in southeastern Oregon, as amended by the 2015 Greater Sage-Grouse Approved RMP Amendments for Idaho and Oregon.

Coordination with other Federal, tribal, and non-Federal land owners would occur to facilitate opportunities to meet project objectives across all ownerships within the landscape.

Preliminary Issues and Scoping

The purpose of the public scoping process is to determine relevant issues that would influence the scope of the environmental analysis, including alternatives, and guide the process for developing the draft EIS. At present, the BLM has identified the following preliminary issues:

- What is the potential to reduce further loss of sage-grouse and other sagebrush-obligate species' habitat and increase species' persistence through implementation of the proposed fuel break system?
- What is the potential for the proposed action to effectively reduce the size of wildfires and reduce the rate of spread of fires once ignited?
- What construction of new locations or modifications to existing locations for pre-positioning suppression resources would be required to shorten distances and/or response times to ignitions?
- What is the potential for the spread of noxious weeds and invasive plants (*i.e.,* cheatgrass)?
- What is the potential to affect wildlife habitat connectivity and how would the proposed action affect animal migration routes and prey-predator interactions?
- How would the proposed action affect habitat for the GRSG, migratory birds, and pygmy rabbits?
- What would the effects of the proposed action be to wilderness, wilderness study areas, and lands with wilderness characteristics?
- How would the proposed action affect exposure of and accessibility to cultural sites and areas of cultural importance?
- What is the potential for the proposed action to affect watersheds (*e.g.,* hydrologic function)?

Mitigation measures and project design features would be used to minimize impacts to sage-grouse habitat, migratory birds, pygmy rabbits, wilderness characteristics, cultural sites, and watersheds and to limit introduction and spread of invasive and noxious vegetation. Mitigation measures and design features would primarily include avoidance buffers and timing restrictions during implementation and avoidance buffers for fuel break placement; these will be described and analyzed in detail in the draft EIS.

The BLM will consult with tribes on a government-to-government basis in accordance with Executive Order 13175 and other policies. Tribal concerns, including impacts on Indian trust assets and potential impacts to cultural resources and areas of cultural importance, will be given due consideration.

The BLM invites and encourages public participation through the NEPA process to satisfy requirements under Section 106 of the NHPA (16 U.S.C. 470(f)) pursuant to 36 CFR 800.2(d)(3). Historic and cultural resources information related to the area potentially affected by the proposed project will assist the BLM in identifying and evaluating impacts to these resources in the context of both NEPA and Section 106 of the NHPA.

Federal, State, and local agencies, along with other stakeholders interested in or affected by the proposed project that the BLM is evaluating are invited to participate in the scoping process.

Eligible agencies may request or be requested by the BLM to participate in the development of the environmental analysis as a cooperating agency.

Before including your address, phone number, email address, or other personal identifying information in your comment, you should be aware that your entire comment—including your personal identifying information—may be made publicly available at any time. While you can ask us in your comment to withhold your personal identifying information from public review, we cannot guarantee that we will be able to do so.

Authority: 40 CFR 1501.7.

Lara Douglas,

BLM Boise District Manager.

Donald N. Gonzalez,

BLM Vale District Manager.

[FR Doc. 2016–29202 Filed 12–5–16; 8:45 am]

BILLING CODE 4310–GG–P

DEPARTMENT OF THE INTERIOR

Office of Surface Mining Reclamation and Enforcement

[S1D1S SS08011000 SX066A0067F 178S180110; S2D2D SS08011000 SX066A00 33F 17XS501520]

Notice of Proposed Information Collection; Request for Comments for 1029–0113

AGENCY: Office of Surface Mining Reclamation and Enforcement, Interior.

ACTION: Notice and request for comments.

SUMMARY: In compliance with the Paperwork Reduction Act of 1995, the Office of Surface Mining Reclamation and Enforcement (OSMRE) is announcing that the information collection request for General Reclamation Requirements, has been forwarded to the Office of Management and Budget (OMB) for review and approval. The information collection request describes the nature of the information collection and its expected burden and cost.

DATES: OMB has up to 60 days to approve or disapprove the information collection but may respond after 30 days. Therefore, public comments should be submitted to OMB by January 5, 2017, in order to be assured of consideration.

ADDRESSES: Submit comments to the Office of Information and Regulatory Affairs, Office of Management and Budget, Attention: Department of the Interior Desk Officer, by telefax at (202) 395–5806 or via email to *OIRA_submission@omb.eop.gov.* Also, please send a copy of your comments to John Trelease, Office of Surface Mining Reclamation and Enforcement, 1951 Constitution Ave. NW., Room 203–SIB, Washington, DC 20240, or electronically to *jtrelease@osmre.gov.* Please refer to OMB control number 1029–0113 in your correspondence.

FOR FURTHER INFORMATION CONTACT: To receive a copy of the information collection request contact John Trelease at (202) 208–2783 or via email at *jtrelease@osmre.gov.* You may also review the information collection request online at *http://www.reginfo.gov.* Follow the instructions to review Department of the Interior collections under review by OMB.

SUPPLEMENTARY INFORMATION: OMB regulations at 5 CFR 1320, which implement provisions of the Paperwork Reduction Act of 1995 (Pub. L. 104–13), require that interested members of the public and affected agencies have an opportunity to comment on information collection and recordkeeping activities [see 5 CFR 1320.8(d)]. OSMRE has submitted a request to OMB to renew its approval for the collection of information found at 30 CFR part 874. OSMRE is requesting a 3-year term of approval for these information collection activities.

An agency may not conduct or sponsor, and a person is not required to respond to, a collection of information unless it displays a currently valid OMB control number. The OMB control number for this collection of information is 1029–0113, and may be found in OSMRE's regulations at 874.10. Responses are required to obtain a benefit.

As required under 5 CFR 1320.8(d), a **Federal Register** notice soliciting comments on the collection of information for Part 874 was published on August 31, 2016 (81 FR 60021). No comments were received from that notice. This notice provides the public with an additional 30 days in which to comment on the following information collection activity:

Title: 30 CFR part 874—General Reclamation Requirements.

OMB Control Number: 1029–0113.

Summary: Part 874 establishes land and water eligibility requirements, reclamation objectives and priorities and reclamation contractor responsibility. The regulations at 30 CFR 874.17 require consultation between the Abandoned Mine Land (AML) agency and the appropriate Title V regulatory authority on the likelihood of removing the coal under a Title V permit and concurrences between the AML agency and the appropriate Title V regulatory authority on the AML project boundary and the amount of coal that would be extracted under the AML reclamation project.

Bureau Form Number: None.

Frequency of Collection: Once.

Description of Respondents: 8 State regulatory authorities and Indian Tribes.

Total Annual Responses: 8.

Total Annual Burden Hours: 664.

Send comments on the need for the collection of information for the performance of the functions of the agency; the accuracy of the agency's burden estimates; ways to enhance the quality, utility and clarity of the information collection; and ways to minimize the information collection burdens on respondents, such as use of automated means of collections of the information, to the addresses listed under **ADDRESSES**. Please refer to OMB control number 1029–0113 in all correspondence.

Before including your address, phone number, email address, or other personal identifying information in your comment, you should be aware that your entire comment—including your personal identifying information—may be made publicly available at any time. While you can ask us in your comment to withhold your personal identifying information from public review, we cannot guarantee that we will be able to do so.

Dated: December 1, 2016.

John A. Trelease,

Acting Chief, Division of Regulatory Support.

[FR Doc. 2016–29178 Filed 12–5–16; 8:45 am]

BILLING CODE 4310–05–P

DEPARTMENT OF JUSTICE

[OMB Number 1121–0312]

Agency Information Collection Activities; Proposed eCollection eComments Requested; Revision of a Currently Approved Collection: 2014–2016 Survey of State Criminal History Information Systems

AGENCY: Bureau of Justice Statistics, Department of Justice.

ACTION: 30-day notice.

SUMMARY: The Department of Justice (DOJ), Office of Justice Programs, Bureau of Justice Statistics, will be submitting the following information collection request to the Office of Management and Budget (OMB) for review and approval in accordance with the Paperwork Reduction Act of 1995.

This proposed information collection was previously published in the **Federal Register** at Volume 80 FR 9282, February 20, 2015, allowing for a 30 day comment period. This notice is being published to seek public comments on changes to the survey instrument proposed for the 2016 collection.

DATES: Comments are encouraged and will be accepted for 30 days until January 5, 2017.

FOR FURTHER INFORMATION CONTACT: If you have additional comments especially on the estimated public burden or associated response time, suggestions, or need a copy of the proposed information collection instrument with instructions or additional information, please contact Devon Adams, Bureau of Justice Statistics, 810 Seventh St. NW., Washington, DC 20531 (email: *Devon.Adams@usdoj.gov;* telephone: 202–514–9157). Written comments and/or suggestions can also be directed to the Office of Management and Budget, Office of Information and Regulatory Affairs, Attention Department of Justice Desk Officer, Washington, DC 20530 or sent to *OIRA_submissions@omb.eop.gov*.

SUPPLEMENTARY INFORMATION: Written comments and suggestions from the public and affected agencies concerning the proposed collection of information are encouraged. Your comments should address one or more of the following four points:

—Evaluate whether the proposed collection of information is necessary for the proper performance of the functions of the Bureau of Justice Statistics, including whether the information will have practical utility;
—Evaluate the accuracy of the agency's estimate of the burden of the proposed collection of information, including the validity of the methodology and assumptions used;
—Evaluate whether and if so how the quality, utility, and clarity of the information to be collected can be enhanced; and
—Minimize the burden of the collection of information on those who are to respond, including through the use of appropriate automated, electronic, mechanical, or other technological collection techniques or other forms of information technology, *e.g.,* permitting electronic submission of responses.

Overview of this information collection:

(1) *Type of Information Collection:* Revision of a currently approved collection.

(2) *Title of the Form/Collection: Survey of State Criminal History Information Systems, 2016.*

(3) *Agency form number, if any, and the applicable component of the Department of Justice sponsoring the collection:* There is no form number. The applicable component within the Department of Justice is the Bureau of Justice Statistics, in the Office of Justice Programs.

(4) *Affected public who will be asked or required to respond, as well as a brief abstract:* Primary: State Government. This information collection is a survey of State record repositories to estimate the percentage of total state records that are immediately available through the FBI's Interstate Identification Index and the percentage of records that are complete and fingerprint-supported.

(5) *An estimate of the total number of respondents and the amount of time estimated for an average respondent to respond:* It is estimated that 56 respondents will expend approximately 6.2 hours to complete the survey once every two years.

(6) *An estimate of the total public burden (in hours) associated with the collection:* There are an estimated 347 total annual burden hours associated with this collection.

If additional information is required contact: Jerri Murray, Department Clearance Officer, United States Department of Justice, Justice Management Division, Policy and Planning Staff, Two Constitution Square, 145 N Street NE., 3E.405B, Washington, DC 20530.

Dated: November 30, 2016.

Jerri Murray,

Department Clearance Officer for PRA, U.S. Department of Justice.

[FR Doc. 2016–29148 Filed 12–5–16; 8:45 am]

BILLING CODE 4410–18–P

DEPARTMENT OF JUSTICE

[OMB Number 1121–0292]

Agency Information Collection Activities; Proposed Collection Comments Requested; Extension of a Currently Approved Collection: 2016–2018 Survey of Sexual Victimization (SSV)

AGENCY: Bureau of Justice Statistics, Department of Justice.

ACTION: 60-Day notice.

SUMMARY: The Department of Justice (DOJ), Office of Justice Programs, Bureau of Justice Statistics, will be submitting the following information collection request to the Office of Management and Budget (OMB) for review and approval in accordance with the Paperwork Reduction Act of 1995.

DATES: Comments are encouraged and will be accepted for 60 days until February 6, 2017.

FOR FURTHER INFORMATION CONTACT: If you have additional comments especially on the estimated public burden or associated response time, suggestions, or need a copy of the proposed information collection instrument with instructions or additional information, please contact Ramona Rantala, Statistician, Bureau of Justice Statistics, 810 Seventh Street NW., Washington, DC 20531 (email: *Ramona.Rantala@usdoj.gov;* telephone: 202–307–6170).

SUPPLEMENTARY INFORMATION: Written comments and suggestions from the public and affected agencies concerning the proposed collection of information are encouraged. Your comments should address one or more of the following four points:

—Evaluate whether the proposed collection of information is necessary for the proper performance of the functions of the Bureau of Justice Statistics, including whether the information will have practical utility;
—Evaluate the accuracy of the agency's estimate of the burden of the proposed collection of information, including the validity of the methodology and assumptions used;
—Evaluate whether and if so how the quality, utility, and clarity of the information to be collected can be enhanced; and
—Minimize the burden of the collection of information on those who are to respond, including through the use of appropriate automated, electronic, mechanical, or other technological collection techniques or other forms of information technology, *e.g.,* permitting electronic submission of responses.

Overview of this information collection:

(1) *Type of Information Collection:* Extension of currently approved collection.

(2) *The Title of the Form/Collection:* Survey of Sexual Victimization (formerly the Survey of Sexual Violence).

(3) *The agency form number, if any, and the applicable component of the Department sponsoring the collection:* The form numbers for the questionnaires are SSV–1, SSV–2, SSV–3, SSV–4, SSV–5, SSV–6, SSV–IA, and SSV–IJ. The applicable component within the Department of Justice is the

Bureau of Justice Statistics, in the Office of Justice Programs.

(4) *Affected public who will be asked or required to respond, as well as a brief abstract:* Primary: *State, Local, or Tribal Government.* Other: *Federal Government and business (privately operated correctional institutions, both for-profit and not-for-profit).* The data will be used to develop estimates for the incidence and prevalence of sexual assault within correctional facilities, as well as characteristics of substantiated incidents, as required under the Prison Rape Elimination Act of 2003 (Pub. L. 108–79).

(5) *An estimate of the total number of respondents and the amount of time estimated for an average respondent to respond:* An estimate of the total number of respondents is 1,538 adult and juvenile systems and facilities. (This estimate assumes a response rate of 100%.) Federal and state systems for adults and juveniles (102 respondents) will take an estimated 60 minutes to complete the summary form; local and privately operated facilities (1,426 respondents) will take an estimated 30 minutes to complete the summary form; and each incident form (we estimate about 2,000 incident forms will be completed, one for each incident that was substantiated) will take about 30 minutes. The annual burden estimates are based on data from the prior administration of the SSV.

(6) *An estimate of the total public burden (in hours) associated with the collection:* The annual total burden hours associated with this collection is estimated to be 1,815.

If additional information is required contact: Jerri Murray, Department Clearance Officer, United States Department of Justice, Justice Management Division, Policy and Planning Staff, Two Constitution Square, 145 N Street NE., 3E.405B, Washington, DC 20530.

Dated: December 1, 2016.

Jerri Murray,

Department Clearance Officer for PRA, U.S. Department of Justice.

[FR Doc. 2016–29166 Filed 12–5–16; 8:45 am]

BILLING CODE 4410–18–P

NUCLEAR REGULATORY COMMISSION

[NRC–2016–0240]

Applications and Amendments to Facility Operating Licenses and Combined Licenses Involving Proposed No Significant Hazards Considerations and Containing Sensitive Unclassified Non-Safeguards Information and Order Imposing Procedures for Access to Sensitive Unclassified Non-Safeguards Information

AGENCY: Nuclear Regulatory Commission.

ACTION: License amendment request; notice of opportunity to comment, request a hearing, and petition for leave to intervene; order imposing procedures.

SUMMARY: The U.S. Nuclear Regulatory Commission (NRC) received and is considering approval of two amendment requests. The amendment requests are for Point Beach Nuclear Plant, Unit 1; and Virgil C. Summer Nuclear Station, Units 2 and 3. For each amendment request, the NRC proposes to determine that they involve no significant hazards consideration. Because each amendment request contains sensitive unclassified non-safeguards information (SUNSI) an order imposes procedures to obtain access to SUNSI for contention preparation.

DATES: Comments must be filed by January 5, 2017. A request for a hearing must be filed by February 6, 2017. Any potential party as defined in § 2.4 of title 10 of the *Code of Federal Regulations* (10 CFR), who believes access to SUNSI is necessary to respond to this notice must request document access by December 16, 2016.

ADDRESSES: You may submit comments by any of the following methods.

- *Federal Rulemaking Web site:* Go to *http://www.regulations.gov* and search for Docket ID NRC–2016–0240. Address questions about NRC dockets to Carol Gallagher; telephone: 301–415–3463; email: *Carol.Gallagher@nrc.gov.* For technical questions, contact the individual listed in the **FOR FURTHER INFORMATION CONTACT** section of this document.
- *Mail comments to:* Cindy Bladey, Office of Administration, Mail Stop: OWFN–12–H08, U.S. Nuclear Regulatory Commission, Washington, DC 20555–0001.

For additional direction on obtaining information and submitting comments, see ''Obtaining Information and Submitting Comments'' in the **SUPPLEMENTARY INFORMATION** section of this document.

FOR FURTHER INFORMATION CONTACT: Janet Burkhardt, Office of Nuclear Reactor Regulation, U.S. Nuclear Regulatory Commission, Washington, DC 20555–0001; telephone: 301–415–1384; email: *Janet.Burkhardt@nrc.gov.*

SUPPLEMENTARY INFORMATION:

I. Obtaining Information and Submitting Comments

A. Obtaining Information

Please refer to Docket ID facility name, unit number(s), plant docket number, application date, and subject when contacting the NRC about the availability of information for this action. You may obtain publicly-available information related to this action by any of the following methods:

- *Federal rulemaking Web site:* Go to *http://www.regulations.gov* and search for Docket ID NRC–2016–0240.
- *NRC's Agencywide Documents Access and Management System (ADAMS):* You may obtain publicly-available documents online in the ADAMS Public Documents collection at *http://www.nrc.gov/reading-rm/adams.html.* To begin the search, select ''*ADAMS Public Documents*'' and then select ''*Begin Web-based ADAMS Search.*'' For problems with ADAMS, please contact the NRC's Public Document Room (PDR) reference staff at 1–800–397–4209, 301–415–4737, or by email to *pdr.resource@nrc.gov.* The ADAMS accession number for each document referenced (if it is available in ADAMS) is provided the first time that it is mentioned in this document.
- *NRC's PDR:* You may examine and purchase copies of public documents at the NRC's PDR, Room O1–F21, One White Flint North, 11555 Rockville Pike, Rockville, Maryland 20852.

B. Submitting Comments

Please include Docket ID NRC–2016–0240, facility name, unit number(s), plant docket number, application date, and subject in your comment submission.

The NRC cautions you not to include identifying or contact information that you do not want to be publicly disclosed in your comment submission. The NRC will post all comment submissions at *http://www.regulations.gov* as well as enter the comment submissions into ADAMS. The NRC does not routinely edit comment submissions to remove identifying or contact information.

If you are requesting or aggregating comments from other persons for submission to the NRC, then you should

inform those persons not to include identifying or contact information that they do not want to be publicly disclosed in their comment submission. Your request should state that the NRC does not routinely edit comment submissions to remove such information before making the comment submissions available to the public or entering the comment into ADAMS.

II. Background

Pursuant to Section 189a.(2) of the Atomic Energy Act of 1954, as amended (the Act), the NRC is publishing this notice. The Act requires the Commission to publish notice of any amendments issued, or proposed to be issued and grants the Commission the authority to issue and make immediately effective any amendment to an operating license or combined license, as applicable, upon a determination by the Commission that such amendment involves no significant hazards consideration, notwithstanding the pendency before the Commission of a request for a hearing from any person.

This notice includes notices of amendments containing SUNSI.

III. Notice of Consideration of Issuance of Amendments to Facility Operating Licenses and Combined Licenses, Proposed No Significant Hazards Consideration Determination, and Opportunity for a Hearing

The Commission has made a proposed determination that the following amendment requests involve no significant hazards consideration. Under the Commission's regulations in 10 CFR 50.92, this means that operation of the facility in accordance with the proposed amendment would not (1) involve a significant increase in the probability or consequences of an accident previously evaluated, (2) create the possibility of a new or different kind of accident from any accident previously evaluated, or (3) involve a significant reduction in a margin of safety. The basis for this proposed determination for each amendment request is shown below.

The Commission is seeking public comments on this proposed determination. Any comments received within 30 days after the date of publication of this notice will be considered in making any final determination.

Normally, the Commission will not issue the amendment until the expiration of 60 days after the date of publication of this notice. The Commission may issue the license amendment before expiration of the 60-day period provided that its final determination is that the amendment involves no significant hazards consideration. In addition, the Commission may issue the amendment prior to the expiration of the 30-day comment period if circumstances change during the 30-day comment period such that failure to act in a timely way would result, for example, in derating or shutdown of the facility. If the Commission takes action prior to the expiration of either the comment period or the notice period, it will publish a notice of issuance in the **Federal Register**. If the Commission makes a final no significant hazards consideration determination, any hearing will take place after issuance. The Commission expects that the need to take this action will occur very infrequently.

A. Opportunity To Request a Hearing and Petition for Leave To Intervene

Within 60 days after the date of publication of this notice, any persons (petitioner) whose interest may be affected by this action may file a request for a hearing and a petition to intervene (petition) with respect to the action. Petitions shall be filed in accordance with the Commission's ''Agency Rules of Practice and Procedure'' in 10 CFR part 2. Interested persons should consult a current copy of 10 CFR 2.309, which is available at the NRC's PDR, located at One White Flint North, Room O1–F21, 11555 Rockville Pike (first floor), Rockville, Maryland 20852. The NRC's regulations are accessible electronically from the NRC Library on the NRC's Web site at *http://www.nrc.gov/reading-rm/doc-collections/cfr/*. If a petition is filed within 60 days, the Commission or a presiding officer designated by the Commission or by the Chief Administrative Judge of the Atomic Safety and Licensing Board Panel, will rule on the petition; and the Secretary or the Chief Administrative Judge of the Atomic Safety and Licensing Board Panel will issue a notice of a hearing or an appropriate order.

As required by 10 CFR 2.309, a petition shall set forth with particularity the interest of the petitioner in the proceeding, and how that interest may be affected by the results of the proceeding. The petition should specifically explain the reasons why intervention should be permitted with particular reference to the following general requirements: (1) The name, address, and telephone number of the petitioner; (2) the nature of the petitioner's right under the Act to be made a party to the proceeding; (3) the nature and extent of the petitioner's property, financial, or other interest in the proceeding; and (4) the possible effect of any decision or order which may be entered in the proceeding on the petitioner's interest. The petition must also set forth the specific contentions which the petitioner seeks to have litigated at the proceeding.

Each contention must consist of a specific statement of the issue of law or fact to be raised or controverted. In addition, the petitioner shall provide a brief explanation of the bases for the contention and a concise statement of the alleged facts or expert opinion which support the contention and on which the petitioner intends to rely in proving the contention at the hearing. The petitioner must also provide references to those specific sources and documents of which the petitioner is aware and on which the petitioner intends to rely to establish those facts or expert opinion to support its position on the issue. The petition must include sufficient information to show that a genuine dispute exists with the applicant on a material issue of law or fact. Contentions shall be limited to matters within the scope of the proceeding. The contention must be one which, if proven, would entitle the petitioner to relief. A petitioner who fails to satisfy these requirements with respect to at least one contention will not be permitted to participate as a party.

Those permitted to intervene become parties to the proceeding, subject to any limitations in the order granting leave to intervene, and have the opportunity to participate fully in the conduct of the hearing with respect to resolution of that person's admitted contentions consistent with the NRC's regulations, policies, and procedures.

Petitions for leave to intervene must be filed no later than 60 days from the date of publication of this notice. Requests for hearing, petitions for leave to intervene, and motions for leave to file new or amended contentions that are filed after the 60-day deadline will not be entertained absent a determination by the presiding officer that the filing demonstrates good cause by satisfying the three factors in 10 CFR 2.309(c)(1)(i) through (iii).

A State, local governmental body, Federally-recognized Indian Tribe, or agency thereof, may submit a petition to the Commission to participate as a party under 10 CFR 2.309(h)(1).

The petition should state the nature and extent of the petitioner's interest in the proceeding. The petition should be submitted to the Commission by February 6, 2017. The petition must be filed in accordance with the filing

instructions in the ''Electronic Submissions (E-Filing)'' section of this document, and should meet the requirements for petitions set forth in this section, except that under 10 CFR 2.309(h)(2) a State, local governmental body, or Federally-recognized Indian Tribe, or agency thereof does not need to address the standing requirements in 10 CFR 2.309(d) if the facility is located within its boundaries. A State, local governmental body, Federally-recognized Indian Tribe, or agency thereof may also have the opportunity to participate under 10 CFR 2.315(c).

If a hearing is granted, any person who does not wish, or is not qualified, to become a party to the proceeding may, in the discretion of the presiding officer, be permitted to make a limited appearance pursuant to the provisions of 10 CFR 2.315(a). A person making a limited appearance may make an oral or written statement of position on the issues, but may not otherwise participate in the proceeding. A limited appearance may be made at any session of the hearing or at any prehearing conference, subject to the limits and conditions as may be imposed by the presiding officer. Details regarding the opportunity to make a limited appearance will be provided by the presiding officer if such sessions are scheduled.

B. Electronic Submissions (E-Filing)

All documents filed in NRC adjudicatory proceedings, including a request for hearing, a petition for leave to intervene, any motion or other document filed in the proceeding prior to the submission of a request for hearing or petition to intervene (hereinafter ''petition''), and documents filed by interested governmental entities participating under 10 CFR 2.315(c), must be filed in accordance with the NRC's E-Filing rule (72 FR 49139; August 28, 2007, as amended at 77 FR 46562; August 3, 2012). The E-Filing process requires participants to submit and serve all adjudicatory documents over the internet, or in some cases to mail copies on electronic storage media. Participants may not submit paper copies of their filings unless they seek an exemption in accordance with the procedures described below.

To comply with the procedural requirements of E-Filing, at least 10 days prior to the filing deadline, the participant should contact the Office of the Secretary by email at *hearing.docket@nrc.gov,* or by telephone at 301–415–1677, to request (1) a digital identification (ID) certificate, which allows the participant (or its counsel or representative) to digitally sign documents and access the E-Submittal server for any proceeding in which it is participating; and (2) advise the Secretary that the participant will be submitting a petition (even in instances in which the participant, or its counsel or representative, already holds an NRC-issued digital ID certificate). Based upon this information, the Secretary will establish an electronic docket for the hearing in this proceeding if the Secretary has not already established an electronic docket.

Information about applying for a digital ID certificate is available on the NRC's public Web site at *http://www.nrc.gov/site-help/e-submittals/getting-started.html.* System requirements for accessing the E-Submittal server are available on the NRC's public Web site at *http://www.nrc.gov/site-help/e-submittals/adjudicatory-sub.html.* Participants may attempt to use other software not listed on the Web site, but should note that the NRC's E-Filing system does not support unlisted software, and the NRC Electronic Filing Help Desk will not be able to offer assistance in using unlisted software.

Once a participant has obtained a digital ID certificate and a docket has been created, the participant can then submit a petition. Submissions should be in Portable Document Format (PDF). Additional guidance on PDF submissions is available on the NRC's public Web site at *http://www.nrc.gov/site-help/electronic-sub-ref-mat.html.* A filing is considered complete at the time the documents are submitted through the NRC's E-Filing system. To be timely, an electronic filing must be submitted to the E-Filing system no later than 11:59 p.m. Eastern Time on the due date. Upon receipt of a transmission, the E-Filing system time-stamps the document and sends the submitter an email notice confirming receipt of the document. The E-Filing system also distributes an email notice that provides access to the document to the NRC's Office of the General Counsel and any others who have advised the Office of the Secretary that they wish to participate in the proceeding, so that the filer need not serve the documents on those participants separately. Therefore, applicants and other participants (or their counsel or representative) must apply for and receive a digital ID certificate before a hearing petition to intervene is filed so that they can obtain access to the document via the E-Filing system.

A person filing electronically using the NRC's adjudicatory E-Filing system may seek assistance by contacting the NRC Electronic Filing Help Desk through the ''Contact Us'' link located on the NRC's public Web site at *http://www.nrc.gov/site-help/e-submittals.html,* by email to *MSHD.Resource@nrc.gov,* or by a toll-free call at 1–866–672–7640. The NRC Electronic Filing Help Desk is available between 9 a.m. and 7 p.m., Eastern Time, Monday through Friday, excluding government holidays.

Participants who believe that they have a good cause for not submitting documents electronically must file an exemption request, in accordance with 10 CFR 2.302(g), with their initial paper filing stating why there is good cause for not filing electronically and requesting authorization to continue to submit documents in paper format. Such filings must be submitted by: (1) First class mail addressed to the Office of the Secretary of the Commission, U.S. Nuclear Regulatory Commission, Washington, DC 20555–0001, Attention: Rulemaking and Adjudications Staff; or (2) courier, express mail, or expedited delivery service to the Office of the Secretary, 11555 Rockville Pike, Rockville, Maryland, 20852, Attention: Rulemaking and Adjudications Staff. Participants filing a document in this manner are responsible for serving the document on all other participants. Filing is considered complete by first-class mail as of the time of deposit in the mail, or by courier, express mail, or expedited delivery service upon depositing the document with the provider of the service. A presiding officer, having granted an exemption request from using E-Filing, may require a participant or party to use E-Filing if the presiding officer subsequently determines that the reason for granting the exemption from use of E-Filing no longer exists.

Documents submitted in adjudicatory proceedings will appear in the NRC's electronic hearing docket which is available to the public at *http://ehd1.nrc.gov/ehd/,* unless excluded pursuant to an order of the Commission, or the presiding officer. Participants are requested not to include personal privacy information, such as social security numbers, home addresses, or home phone numbers in their filings, unless an NRC regulation or other law requires submission of such information. However, in some instances, a petition will require including information on local residence in order to demonstrate a proximity assertion of interest in the proceeding. With respect to copyrighted works, except for limited excerpts that serve the purpose of the adjudicatory filings and would constitute a Fair Use application, participants are requested

not to include copyrighted materials in their submission.

The Commission will issue a notice or order granting or denying a hearing request or intervention petition, designating the issues for any hearing that will be held and designating the Presiding Officer. A notice granting a hearing will be published in the **Federal Register** and served on the parties to the hearing.

For further details with respect to these license amendment applications, see the application for amendment which is available for public inspection in ADAMS and at the NRC's PDR. For additional direction on accessing information related to this document, see the ''Obtaining Information and Submitting Comments'' section of this document.

NextEra Energy, Point Beach, LLC, Docket No. 50–266, Point Beach Nuclear Plant, Unit 1, Town of Two Creeks, Manitowoc County, Wisconsin

Date of amendment request: July 29, 2016. A publicly-available version is in ADAMS under Accession No. ML16237A066.

Description of amendment request: This amendment request contains sensitive unclassified non-safeguard information (SUNSI). The amendment would revise technical specification (TS) 3.4.13, RCS [Reactor Coolant System] Operational Leakage; TS 5.5.8, Steam Generator (SG) Program; and TS 5.6.8, Steam Generator Tube Inspection Report, to exclude a portion of the tubes below the top of the SG tube sheet from periodic inspections and plugging.

Basis for proposed no significant hazards consideration determination: As required by 10 CFR 50.91(a), the licensee has provided its analysis of the issue of no significant hazards consideration which is presented below:

1. The proposed changes do not involve a significant increase in the probability or consequences of an accident previously evaluated.

The proposed changes to TS 3.4.13, TS 5.5.8, and TS 5.6.8 have no effect on accident probabilities or consequences. The previously analyzed accidents are initiated by the failure of plant structures, systems, or components. The proposed change that alters the steam generator (SG) inspection and reporting criteria does not have a detrimental impact on the integrity of any plant structure, system, or component that initiates an analyzed event. The proposed change will not alter the operation of, or otherwise increase the failure probability of any plant equipment that initiates an analyzed accident.

Of the applicable accidents previously evaluated, the limiting transients with consideration to the proposed change to the SG tube inspection and repair criteria are: The steam generator tube rupture (SGTR) event, the steam line break (SLB), locked rotor and control rod ejection postulated accidents. Loss of Coolant Accident conditions cause a compressive load to act on a tube. This accident attempts to displace the tube into the tubesheet rather than pull it out, and, therefore, is not a factor in this amendment request. Another faulted load consideration is a safe shutdown earthquake; however, seismic analysis has shown that axial loading of the tubes is negligible during this event (Section 5.0 of Reference 10).

Addressing the SGTR event, the required structural integrity margins of the SG tubes and the tube-to-tubesheet joint over the H* distance will be maintained. Tube rupture in tubes with cracks within the tubesheet is precluded by the constraint provided by the presence of the tubesheet and the tube-to-tubesheet joint. Tube burst cannot occur within the thickness of the tubesheet. The tube-to-tubesheet joint constraint results from the hydraulic expansion process, thermal expansion mismatch between the tube and tubesheet, from the differential pressure between the primary and secondary side, and tubesheet rotation. Based on this design, the structural margins against burst/tube pullout, as discussed in Regulatory Guide (RG) 1.121, ''Bases for Plugging Degraded PWR [pressurized-water reactor] Steam Generator Tubes,'' and TS 5.5.8 are maintained for both normal and postulated accident conditions. The final H* distance to preclude tube pullout from the tubesheet at 0.95 probability at 95% confidence is 20.60 inches.

The proposed change has no impact on the structural or leakage integrity of the portion of the tube outside of the tubesheet. The proposed change maintains structural and leakage integrity of the SG tubes consistent with the performance criteria in TS 5.5.8. Therefore, the proposed change results in no significant increase in the probability of the occurrence of a SGTR accident.

At normal operating pressures, leakage from tube degradation below the proposed limited inspection depth is limited by the tube-to-tubesheet crevice. Consequently, negligible normal operating leakage is expected from degradation below the inspected depth within the tubesheet region. The consequences of an SGTR event are not affected by the primary-to-secondary leakage flow during the event as primary-to-secondary leakage flow through a postulated tube that has been pulled out of the tubesheet is essentially equivalent to a severed tube. Therefore, the proposed change does not result in a significant increase in the consequences of a SGTR.

Concerning a postulated SLB event, NextEra will apply a leakage factor of 5.22 to the normal operating leakage associated with the tubesheet expansion region in the condition monitoring (CM) and operational assessment (OA). The leakage factor of 5.22 is a bounding value for all SGs, both hot and cold legs. The accident-induced leak rate limit for Point Beach Unit 1 is 500 gpd [gallons per day] at accident conditions. As a result, the TS operational leak rate limit is reduced from 150 gpd to 72 gpd through any one steam generator to help to ensure that accident induced leakage in excess of SLB accident analysis assumptions will not occur.

For the CM assessment, the component of leakage from the prior cycle from below the H* distance will be multiplied by a factor of 5.22 and added to the total leakage from any other source and compared to the allowable accident induced leakage limit. For the OA, the difference in the leakage between the allowable leakage and the accident induced leakage from sources other than the tubesheet expansion region will be divided by 5.22 and compared to the observed operational leakage.

No leakage factor will be applied to the locked rotor or control rod ejection transients due to their short duration.

Based on the above, the proposed changes do not involve a significant increase in the probability or consequences of an accident previously evaluated.

2. The proposed changes do not create the possibility of a new or different kind of accident from any previously evaluated.

The proposed changes to TS 3.4.13, TS 5.5.8, and TS 5.6.8 that alter the SG inspection and reporting criteria do not introduce any new equipment, create new failure modes for existing equipment, or create any new limiting single failures. Plant operation will not be altered, and all safety functions will continue to perform as previously assumed in accident analyses. Tube bundle integrity is maintained for all plant conditions upon implementation of the permanent alternate repair criteria.

Therefore, based on the above, the proposed change does not create the possibility of a new or different kind of accident from any previously evaluated.

3. The proposed changes do not involve a significant reduction in the margin of safety.

The proposed changes to TS 3.4.13, TS 5.5.8, and TS 5.6.8 define the safety significant portion of the tube that must be inspected and repaired. WCAP–18089–P identifies the specific inspection depth from the top of the tubesheet below which any type of tube degradation is shown to have no impact on the performance criteria in NEI 97–06 Rev. *3,* ''Steam Generator Program Guidelines.''

The proposed change that alters the SG inspection and reporting criteria maintains the required structural margins of the SG tubes for both normal and accident conditions. Nuclear Energy Institute 97–06, ''Steam Generator Program Guidelines,'' and NRC Regulatory Guide (RG) 1.121, ''Bases for Plugging Degraded PWR Steam Generator Tubes'' are used as the bases in the development of the limited tubesheet inspection depth methodology for determining that SG tube integrity considerations are maintained within acceptable limits. RG 1.121 describes a method acceptable to the NRC for meeting General Design Criteria (GDC) 14, ''Reactor Coolant Pressure Boundary,'' GDC 15, ''Reactor Coolant System Design,'' GDC 31, ''Fracture Prevention of Reactor Coolant Pressure Boundary,'' and GDC 32, ''Inspection of Reactor Coolant Pressure Boundary,'' by reducing the probability and consequences of a SGTR. RG 1.121 concludes that by determining the limiting safe conditions for tube wall degradation, the probability and consequences of a SGTR are

reduced. This RG uses safety factors on loads for tube burst that are consistent with the requirements of Section III of the American Society of Mechanical Engineers (ASME) Code.

For axially oriented cracking located within the tubesheet, tube burst is precluded due to the presence of the tubesheet. For circumferentially oriented cracking, Westinghouse WCAP–18089–P defines a length of degradation-free expanded tubing that provides the necessary resistance to tube pullout due to the pressure induced forces, with applicable safety factors applied. Application of the limited hot and cold leg tubesheet inspection criteria will preclude unacceptable primary-to-secondary leakage during all plant conditions. Using the methodology for determining leakage as described in WCAP–18089–P, it is shown that significant adequate margin exists between conservatively estimated accident induced leakage and the allowable accident leakage (500 gpd at operating conditions) if either SG is assumed to be leaking at the TS leakage limit of 72 gpd at the beginning of the design basis accident.

Therefore, the proposed changes do not involve a significant reduction in any margin of safety.

The NRC staff has reviewed the licensee's analysis and, based on this review, it appears that the three standards of 10 CFR 50.92(c) are satisfied. Therefore, the NRC staff proposes to determine that the amendment request involves no significant hazards consideration.

Attorney for licensee: William Blair, Managing Attorney—Nuclear, Florida Power & Light Company, P. O. Box 14000, 700 Universe Boulevard, Juno Beach, Florida 33408–0420.

NRC Branch Chief: David J. Wrona.

South Carolina Electric and Gas Company Docket Nos. 52–027 and 52–028, Virgil C. Summer Nuclear Station (VCSNS) Units 2 and 3, Fairfield County, South Carolina

Date of amendment request: September 20, 2016. A publicly-available version is in ADAMS under Accession No. ML16267A163.

Description of amendment request: This amendment request contains sensitive unclassified non-safeguards information (SUNSI). The amendment request proposes changes to the Updated Final Safety Analysis Report (UFSAR) in the form of departures from the incorporated plant-specific Design Control Document Tier 2* information. Specifically, the proposed change clarifies in the UFSAR how the quality and strength of a specific set of couplers welded to stainless steel embedment plates already installed and embedded in concrete are demonstrated through visual examination and static tension testing, in lieu of the nondestructive examination requirements of American Institute of Steel Construction (AISC) N690, ''Specification for Safety-Related Steel Structures for Nuclear Facilities.''

Basis for proposed no significant hazards consideration determination: As required by 10 CFR 50.91(a), the licensee has provided its analysis of the issue of no significant hazards consideration, which is presented below:

1. Does the proposed amendment involve a significant increase in the probability or consequences of an accident previously evaluated?

Response: No.

The proposed change describes how evaluation of coupler strength, and by extension, weld strength and quality are used to demonstrate the capacity of partial joint penetration (PJP) welds joining weldable couplers to stainless steel embedment plates as being able to perform their design function in lieu of satisfying the AISC N690–1994, Section Q1.26.2.2, Section Q1.26.2.3, and Section Q1.26.3 requirements for non-destructive examination (NDE) on 10 percent weld populations, reexamination, and repair, respectively. The proposed change does not affect the operation of any systems or equipment that initiate an analyzed accident or alter any structures, systems, and components (SSCs) accident initiator or initiating sequence of events.

The change has no adverse effect on the design function of the mechanical couplers or the SSCs to which the mechanical couplers are welded. The probabilities of the accidents evaluated in the Updated Final Safety Analysis Report (UFSAR) are not affected.

The change does not impact the support, design, or operation of mechanical and fluid systems. The change does not impact the support, design, or operation of any safety-related structures. There is no change to plant systems or the response of systems to postulated accident conditions. There is no change to the predicted radioactive releases due to normal operation or postulated accident conditions. The plant response to previously evaluated accidents or external events is not adversely affected, nor does the proposed change create any new accident precursors.

Therefore, the proposed amendment does not involve a significant increase in the probability or consequences of an accident previously evaluated.

2. Does the proposed amendment create the possibility of a new or different kind of accident from any accident previously evaluated?

Response: No.

The proposed change describes how evaluation of coupler strength, and by extension, weld strength and quality are used to demonstrate the capacity of PJP welds joining weldable couplers to stainless steel embedment plates as being able to perform their design function in lieu of satisfying the AISC N690–1994, Section Q1.26.2.2, Section Q1.26.2.3, and Section Q1.26.3 requirements for non-destructive examination on 10 percent weld populations, reexamination, and repair, respectively.

The proposed change does not affect the operation of any systems or equipment that may initiate a new or different kind of accident, or alter any SSC such that a new accident initiator or initiating sequence of events is created.

The proposed change does not adversely affect the design function of the mechanical couplers, the structures in which the couplers are used, or any other SSC design functions or methods of operation in a manner that results in a new failure mode, malfunction, or sequence of events that affect safety-related or nonsafety-related equipment. This activity does not allow for a new fission product release path, result in a new fission product barrier failure mode, or create a new sequence of events that result in significant fuel cladding failures.

Therefore, the proposed amendment does not create the possibility of a new or different kind of accident from any accident previously evaluated.

3. Does the proposed amendment involve a significant reduction in a margin of safety?

Response: No.

The proposed change describes how evaluation of coupler strength, and by extension, weld strength and quality are used to demonstrate the capacity of the PJP welds joining weldable couplers to stainless steel embedment plates as being able to perform their design function in lieu of satisfying the AISC N690–1994, Section Q1.26.2.2, Section Q1.26.2.3, and Section Q1.26.3 requirements for non-destructive examination on 10 percent weld populations, reexamination, and repair, respectively. The proposed change satisfies the same design functions as stated in the UFSAR. This change does not adversely affect compliance with any design function, design analysis, safety analysis input or result, or design/safety margin. No safety analysis or design basis acceptance limit/criterion is challenged or exceeded by the proposed change.

Because no safety analysis or design basis acceptance limit/criterion is challenged or exceeded by this change, no significant margin of safety is reduced.

Therefore, the proposed change does not involve a significant reduction in a margin of safety.

The NRC staff has reviewed the licensee's analysis and, based on this review, it appears that the three standards of 10 CFR 50.92(c) are satisfied. Therefore, the NRC staff proposes to determine that the amendment request involves no significant hazards consideration.

Attorney for licensee: Kathryn M. Sutton, Morgan, Lewis & Bockius LLC, 1111 Pennsylvania Avenue NW, Washington, DC 20004–2514.

NRC Branch Chief: Michael T. Markley.

Order Imposing Procedures for Access to Sensitive Unclassified Non-Safeguards Information for Contention Preparation

NextEra Energy, Point Beach, LLC, Docket No. 50–266, Point Beach Nuclear Plant, Unit 1, Town of Two Creeks, Manitowoc County, Wisconsin

South Carolina Electric and Gas Company Docket Nos. 52–027 and 52–028, Virgil C. Summer Nuclear Station (VCSNS) Units 2 and 3, Fairfield County, South Carolina

A. This Order contains instructions regarding how potential parties to this proceeding may request access to documents containing SUNSI.

B. Within 10 days after publication of this notice of hearing and opportunity to petition for leave to intervene, any potential party who believes access to SUNSI is necessary to respond to this notice may request such access. A ''potential party'' is any person who intends to participate as a party by demonstrating standing and filing an admissible contention under 10 CFR 2.309. Requests for access to SUNSI submitted later than 10 days after publication of this notice will not be considered absent a showing of good cause for the late filing, addressing why the request could not have been filed earlier.

C. The requester shall submit a letter requesting permission to access SUNSI to the Office of the Secretary, U.S. Nuclear Regulatory Commission, Washington, DC 20555–0001, Attention: Rulemakings and Adjudications Staff, and provide a copy to the Associate General Counsel for Hearings, Enforcement and Administration, Office of the General Counsel, Washington, DC 20555–0001. The expedited delivery or courier mail address for both offices is: U.S. Nuclear Regulatory Commission, 11555 Rockville Pike, Rockville, Maryland 20852. The email address for the Office of the Secretary and the Office of the General Counsel are *Hearing.Docket@nrc.gov* and *OGCmailcenter@nrc.gov,* respectively.[1] The request must include the following information:

(1) A description of the licensing action with a citation to this **Federal Register** notice;

(2) The name and address of the potential party and a description of the potential party's particularized interest that could be harmed by the action identified in C.(1); and

(3) The identity of the individual or entity requesting access to SUNSI and the requester's basis for the need for the information in order to meaningfully participate in this adjudicatory proceeding. In particular, the request must explain why publicly-available versions of the information requested would not be sufficient to provide the basis and specificity for a proffered contention.

D. Based on an evaluation of the information submitted under paragraph C.(3) the NRC staff will determine within 10 days of receipt of the request whether:

(1) There is a reasonable basis to believe the petitioner is likely to establish standing to participate in this NRC proceeding; and

(2) The requestor has established a legitimate need for access to SUNSI.

E. If the NRC staff determines that the requestor satisfies both D.(1) and D.(2) above, the NRC staff will notify the requestor in writing that access to SUNSI has been granted. The written notification will contain instructions on how the requestor may obtain copies of the requested documents, and any other conditions that may apply to access to those documents. These conditions may include, but are not limited to, the signing of a Non-Disclosure Agreement or Affidavit, or Protective Order[2] setting forth terms and conditions to prevent the unauthorized or inadvertent disclosure of SUNSI by each individual who will be granted access to SUNSI.

F. Review of Denials of Access.

(1) If the request for access to SUNSI is denied by the NRC staff after a determination on standing and need for access, the NRC staff shall immediately notify the requestor in writing, briefly stating the reason or reasons for the denial.

(2) The requester may challenge the NRC staff's adverse determination by filing a challenge within 5 days of receipt of that determination with: (a) the presiding officer designated in this proceeding; (b) if no presiding officer has been appointed, the Chief Administrative Judge, or if he or she is unavailable, another administrative judge, or an administrative law judge with jurisdiction pursuant to 10 CFR 2.318(a); or (c) an officer if that officer has been designated to rule on information access issues.

G. Review of Grants of Access. A party other than the requester may challenge an NRC staff determination granting access to SUNSI whose release would harm that party's interest independent of the proceeding. Such a challenge must be filed with the Chief Administrative Judge within 5 days of the notification by the NRC staff of its grant of access.

If challenges to the NRC staff determinations are filed, these procedures give way to the normal process for litigating disputes concerning access to information. The availability of interlocutory review by the Commission of orders ruling on such NRC staff determinations (whether granting or denying access) is governed by 10 CFR 2.311.[3]

H. The Commission expects that the NRC staff and presiding officers (and any other reviewing officers) will consider and resolve requests for access to SUNSI, and motions for protective orders, in a timely fashion in order to minimize any unnecessary delays in identifying those petitioners who have standing and who have proposed contentions meeting the specificity and basis requirements in 10 CFR part 2. Attachment 1 to this Order summarizes the general target schedule for processing and resolving requests under these procedures.

It is so ordered.

Dated at Rockville, Maryland, this 22nd day of November, 2016.

For the Nuclear Regulatory Commission.

Annette L. Vietti-Cook,

Secretary of the Commission.

[1] While a request for hearing or petition to intervene in this proceeding must comply with the filing requirements of the NRC's ''E-Filing Rule,'' the initial request to access SUNSI under these procedures should be submitted as described in this paragraph.

[2] Any motion for Protective Order or draft Non-Disclosure Affidavit or Agreement for SUNSI must be filed with the presiding officer or the Chief Administrative Judge if the presiding officer has not yet been designated, within 30 days of the deadline for the receipt of the written access request.

[3] Requesters should note that the filing requirements of the NRC's E-Filing Rule (72 FR 49139; August 28, 2007, as amended at 77 FR 46562; August 3, 2012) apply to appeals of NRC staff determinations (because they must be served on a presiding officer or the Commission, as applicable), but not to the initial SUNSI request submitted to the NRC staff under these procedures.

ATTACHMENT 1—GENERAL TARGET SCHEDULE FOR PROCESSING AND RESOLVING REQUESTS FOR ACCESS TO SENSITIVE UNCLASSIFIED NON-SAFEGUARDS INFORMATION IN THIS PROCEEDING

Day	Event/Activity
0	Publication of FEDERAL REGISTER notice of hearing and opportunity to petition for leave to intervene, including order with instructions for access requests.
10	Deadline for submitting requests for access to Sensitive Unclassified Non-Safeguards Information (SUNSI) with information: supporting the standing of a potential party identified by name and address; describing the need for the information in order for the potential party to participate meaningfully in an adjudicatory proceeding.
60	Deadline for submitting petition for intervention containing: (i) demonstration of standing; and (ii) all contentions whose formulation does not require access to SUNSI (+25 Answers to petition for intervention; +7 petitioner/requestor reply).
20	U.S. Nuclear Regulatory Commission (NRC) staff informs the requester of the staff's determination whether the request for access provides a reasonable basis to believe standing can be established and shows need for SUNSI. (NRC staff also informs any party to the proceeding whose interest independent of the proceeding would be harmed by the release of the information.) If NRC staff makes the finding of need for SUNSI and likelihood of standing, NRC staff begins document processing (preparation of redactions or review of redacted documents).
25	If NRC staff finds no ''need'' or no likelihood of standing, the deadline for petitioner/requester to file a motion seeking a ruling to reverse the NRC staff's denial of access; NRC staff files copy of access determination with the presiding officer (or Chief Administrative Judge or other designated officer, as appropriate). If NRC staff finds ''need'' for SUNSI, the deadline for any party to the proceeding whose interest independent of the proceeding would be harmed by the release of the information to file a motion seeking a ruling to reverse the NRC staff's grant of access.
30	Deadline for NRC staff reply to motions to reverse NRC staff determination(s).
40	(Receipt +30) If NRC staff finds standing and need for SUNSI, deadline for NRC staff to complete information processing and file motion for Protective Order and draft Non-Disclosure Affidavit. Deadline for applicant/licensee to file Non-Disclosure Agreement for SUNSI.
A	If access granted: issuance of presiding officer or other designated officer decision on motion for protective order for access to sensitive information (including schedule for providing access and submission of contentions) or decision reversing a final adverse determination by the NRC staff.
A + 3	Deadline for filing executed Non-Disclosure Affidavits. Access provided to SUNSI consistent with decision issuing the protective order.
A + 28	Deadline for submission of contentions whose development depends upon access to SUNSI. However, if more than 25 days remain between the petitioner's receipt of (or access to) the information and the deadline for filing all other contentions (as established in the notice of hearing or opportunity for hearing), the petitioner may file its SUNSI contentions by that later deadline.
A + 53	(Contention receipt +25) Answers to contentions whose development depends upon access to SUNSI.
A + 60	(Answer receipt +7) Petitioner/Intervenor reply to answers.
>A + 60	Decision on contention admission.

[FR Doc. 2016–28521 Filed 12–5–16; 8:45 am]

BILLING CODE 7590–01–P

NUCLEAR REGULATORY COMMISSION

[NRC–2016–0245]

Biweekly Notice; Applications and Amendments to Facility Operating Licenses and Combined Licenses Involving No Significant Hazards Considerations

AGENCY: Nuclear Regulatory Commission.

ACTION: Biweekly notice.

SUMMARY: Pursuant to Section 189a.(2) of the Atomic Energy Act of 1954, as amended (the Act), the U.S. Nuclear Regulatory Commission (NRC) is publishing this regular biweekly notice. The Act requires the Commission to publish notice of any amendments issued, or proposed to be issued, and grants the Commission the authority to issue and make immediately effective any amendment to an operating license or combined license, as applicable, upon a determination by the Commission that such amendment involves no significant hazards consideration, notwithstanding the pendency before the Commission of a request for a hearing from any person.

This biweekly notice includes all notices of amendments issued, or proposed to be issued, from November 8 to November 21, 2016. The last biweekly notice was published on November 22, 2016.

DATES: Comments must be filed by January 5, 2017. A request for a hearing must be filed by February 6, 2017.

ADDRESSES: You may submit comments by any of the following methods (unless this document describes a different method for submitting comments on a specific subject):

- Federal Rulemaking Web site: Go to *http://www.regulations.gov* and search for Docket ID NRC–2016–0245. Address questions about NRC dockets to Carol Gallagher; telephone: 301–415–3463; email: *Carol.Gallagher@nrc.gov.* For technical questions, contact the individual listed in the **FOR FURTHER INFORMATION CONTACT** section of this document.
- Mail comments to: Cindy Bladey, Office of Administration, Mail Stop: OWFN–12–H08, U.S. Nuclear Regulatory Commission, Washington, DC 20555–0001.

For additional direction on obtaining information and submitting comments, see ''Obtaining Information and Submitting Comments'' in the **SUPPLEMENTARY INFORMATION** section of this document.

FOR FURTHER INFORMATION CONTACT: Janet Burkhardt, Office of Nuclear Reactor Regulation, U.S. Nuclear Regulatory Commission, Washington, DC 20555–0001; telephone: 301–415–1384, email: *Janet.Burkhardt@nrc.gov.*

I. Obtaining Information and Submitting Comments

A. Obtaining Information

Please refer to Docket ID NRC–2016–0245, facility name, unit number(s), plant docket number, application date, and subject when contacting the NRC about the availability of information for this action. You may obtain publicly-available information related to this action by any of the following methods:

- *Federal Rulemaking Web site:* Go to *http://www.regulations.gov* and search for Docket ID NRC–2016–0245.
- *NRC's Agencywide Documents Access and Management System (ADAMS):* You may obtain publicly-available documents online in the ADAMS Public Documents collection at *http://www.nrc.gov/reading-rm/*

adams.html. To begin the search, select ''*ADAMS Public Documents*'' and then select ''*Begin Web-based ADAMS Search.*'' For problems with ADAMS, please contact the NRC's Public Document Room (PDR) reference staff at 1–800–397–4209, 301–415–4737, or by email to *pdr.resource@nrc.gov.* The ADAMS accession number for each document referenced (if it is available in ADAMS) is provided the first time that it is mentioned in this document.

- *NRC's PDR:* You may examine and purchase copies of public documents at the NRC's PDR, Room O1–F21, One White Flint North, 11555 Rockville Pike, Rockville, Maryland 20852.

B. Submitting Comments

Please include Docket ID NRC–2016–0245, facility name, unit number(s), plant docket number, application date, and subject in your comment submission.

The NRC cautions you not to include identifying or contact information that you do not want to be publicly disclosed in your comment submission. The NRC posts all comment submissions at *http://www.regulations.gov* as well as entering the comment submissions into ADAMS. The NRC does not routinely edit comment submissions to remove identifying or contact information.

If you are requesting or aggregating comments from other persons for submission to the NRC, then you should inform those persons not to include identifying or contact information that they do not want to be publicly disclosed in their comment submission. Your request should state that the NRC does not routinely edit comment submissions to remove such information before making the comment submissions available to the public or entering the comment submissions into ADAMS.

II. Notice of Consideration of Issuance of Amendments to Facility Operating Licenses and Combined Licenses and Proposed No Significant Hazards Consideration Determination

The Commission has made a proposed determination that the following amendment requests involve no significant hazards consideration. Under the Commission's regulations in § 50.92 of title 10 of the *Code of Federal Regulations* (10 CFR), this means that operation of the facility in accordance with the proposed amendment would not (1) involve a significant increase in the probability or consequences of an accident previously evaluated, or (2) create the possibility of a new or different kind of accident from any accident previously evaluated; or (3) involve a significant reduction in a margin of safety. The basis for this proposed determination for each amendment request is shown below.

The Commission is seeking public comments on this proposed determination. Any comments received within 30 days after the date of publication of this notice will be considered in making any final determination.

Normally, the Commission will not issue the amendment until the expiration of 60 days after the date of publication of this notice. The Commission may issue the license amendment before expiration of the 60-day period provided that its final determination is that the amendment involves no significant hazards consideration. In addition, the Commission may issue the amendment prior to the expiration of the 30-day comment period if circumstances change during the 30-day comment period such that failure to act in a timely way would result, for example in derating or shutdown of the facility. If the Commission takes action prior to the expiration of either the comment period or the notice period, it will publish in the **Federal Register** a notice of issuance. If the Commission makes a final no significant hazards consideration determination, any hearing will take place after issuance. The Commission expects that the need to take this action will occur very infrequently.

A. Opportunity To Request a Hearing and Petition for Leave To Intervene

Within 60 days after the date of publication of this notice, any persons (petitioner) whose interest may be affected by this action may file a request for a hearing and a petition to intervene (petition) with respect to the action. Petitions shall be filed in accordance with the Commission's ''Agency Rules of Practice and Procedure'' in 10 CFR part 2. Interested persons should consult a current copy of 10 CFR 2.309, which is available at the NRC's PDR, located at One White Flint North, Room O1–F21, 11555 Rockville Pike (first floor), Rockville, Maryland 20852. The NRC's regulations are accessible electronically from the NRC Library on the NRC's Web site at *http://www.nrc.gov/reading-rm/doc-collections/cfr/.* If a petition is filed within 60 days, the Commission or a presiding officer designated by the Commission or by the Chief Administrative Judge of the Atomic Safety and Licensing Board Panel, will rule on the petition; and the Secretary or the Chief Administrative Judge of the Atomic Safety and Licensing Board Panel will issue a notice of a hearing or an appropriate order.

As required by 10 CFR 2.309, a petition shall set forth with particularity the interest of the petitioner in the proceeding, and how that interest may be affected by the results of the proceeding. The petition should specifically explain the reasons why intervention should be permitted with particular reference to the following general requirements: (1) The name, address, and telephone number of the petitioner; (2) the nature of the petitioner's right under the Act to be made a party to the proceeding; (3) the nature and extent of the petitioner's property, financial, or other interest in the proceeding; and (4) the possible effect of any decision or order which may be entered in the proceeding on the petitioner's interest. The petition must also set forth the specific contentions which the petitioner seeks to have litigated at the proceeding.

Each contention must consist of a specific statement of the issue of law or fact to be raised or controverted. In addition, the petitioner shall provide a brief explanation of the bases for the contention and a concise statement of the alleged facts or expert opinion which support the contention and on which the petitioner intends to rely in proving the contention at the hearing. The petitioner must also provide references to those specific sources and documents of which the petitioner is aware and on which the petitioner intends to rely to establish those facts or expert opinion to support its position on the issue. The petition must include sufficient information to show that a genuine dispute exists with the applicant on a material issue of law or fact. Contentions shall be limited to matters within the scope of the proceeding. The contention must be one which, if proven, would entitle the petitioner to relief. A petitioner who fails to satisfy these requirements with respect to at least one contention will not be permitted to participate as a party.

Those permitted to intervene become parties to the proceeding, subject to any limitations in the order granting leave to intervene, and have the opportunity to participate fully in the conduct of the hearing with respect to resolution of that person's admitted contentions consistent with the NRC's regulations, policies, and procedures.

Petitions for leave to intervene must be filed no later than 60 days from the date of publication of this notice. Requests for hearing, petitions for leave

to intervene, and motions for leave to file new or amended contentions that are filed after the 60-day deadline will not be entertained absent a determination by the presiding officer that the filing demonstrates good cause by satisfying the three factors in 10 CFR 2.309(c)(1)(i) through (iii).

If a hearing is requested, and the Commission has not made a final determination on the issue of no significant hazards consideration, the Commission will make a final determination on the issue of no significant hazards consideration. The final determination will serve to decide when the hearing is held. If the final determination is that the amendment request involves no significant hazards consideration, the Commission may issue the amendment and make it immediately effective, notwithstanding the request for a hearing. Any hearing held would take place after issuance of the amendment. If the final determination is that the amendment request involves a significant hazards consideration, then any hearing held would take place before the issuance of any amendment unless the Commission finds an imminent danger to the health or safety of the public, in which case it will issue an appropriate order or rule under 10 CFR part 2.

A State, local governmental body, Federally-recognized Indian Tribe, or agency thereof, may submit a petition to the Commission to participate as a party under 10 CFR 2.309(h)(1).

The petition should state the nature and extent of the petitioner's interest in the proceeding. The petition should be submitted to the Commission by February 6, 2017. The petition must be filed in accordance with the filing instructions in the ''Electronic Submissions (E-Filing)'' section of this document, and should meet the requirements for petitions set forth in this section, except that under 10 CFR 2.309(h)(2) a State, local governmental body, or Federally-recognized Indian Tribe, or agency thereof does not need to address the standing requirements in 10 CFR 2.309(d) if the facility is located within its boundaries. A State, local governmental body, Federally-recognized Indian Tribe, or agency thereof may also have the opportunity to participate under 10 CFR 2.315(c).

If a hearing is granted, any person who does not wish, or is not qualified, to become a party to the proceeding may, in the discretion of the presiding officer, be permitted to make a limited appearance pursuant to the provisions of 10 CFR 2.315(a). A person making a limited appearance may make an oral or written statement of position on the issues, but may not otherwise participate in the proceeding. A limited appearance may be made at any session of the hearing or at any prehearing conference, subject to the limits and conditions as may be imposed by the presiding officer. Details regarding the opportunity to make a limited appearance will be provided by the presiding officer if such sessions are scheduled.

B. Electronic Submissions (E-Filing)

All documents filed in NRC adjudicatory proceedings, including a request for hearing, a petition for leave to intervene, any motion or other document filed in the proceeding prior to the submission of a request for hearing or petition to intervene (hereinafter ''petition''), and documents filed by interested governmental entities participating under 10 CFR 2.315(c), must be filed in accordance with the NRC's E-Filing rule (72 FR 49139; August 28, 2007, as amended at 77 FR 46562, August 3, 2012). The E-Filing process requires participants to submit and serve all adjudicatory documents over the internet, or in some cases to mail copies on electronic storage media. Participants may not submit paper copies of their filings unless they seek an exemption in accordance with the procedures described below.

To comply with the procedural requirements of E-Filing, at least 10 days prior to the filing deadline, the participant should contact the Office of the Secretary by email at *hearing.docket@nrc.gov,* or by telephone at 301–415–1677, to request (1) a digital identification (ID) certificate, which allows the participant (or its counsel or representative) to digitally sign documents and access the E-Submittal server for any proceeding in which it is participating; and (2) advise the Secretary that the participant will be submitting a petition (even in instances in which the participant, or its counsel or representative, already holds an NRC-issued digital ID certificate). Based upon this information, the Secretary will establish an electronic docket for the hearing in this proceeding if the Secretary has not already established an electronic docket.

Information about applying for a digital ID certificate is available on the NRC's public Web site at *http://www.nrc.gov/site-help/e-submittals/getting-started.html.* System requirements for accessing the E-Submittal server are available on the NRC's public Web site at *http://www.nrc.gov/site-help/e-submittals/adjudicatory-sub.html.* Participants may attempt to use other software not listed on the Web site, but should note that the NRC's E-Filing system does not support unlisted software, and the NRC Electronic Filing Help Desk will not be able to offer assistance in using unlisted software.

Once a participant has obtained a digital ID certificate and a docket has been created, the participant can then submit a petition. Submissions should be in Portable Document Format (PDF). Additional guidance on PDF submissions is available on the NRC's public Web site at *http://www.nrc.gov/site-help/electronic-sub-ref-mat.html.* A filing is considered complete at the time the documents are submitted through the NRC's E-Filing system. To be timely, an electronic filing must be submitted to the E-Filing system no later than 11:59 p.m. Eastern Time on the due date. Upon receipt of a transmission, the E-Filing system time-stamps the document and sends the submitter an email notice confirming receipt of the document. The E-Filing system also distributes an email notice that provides access to the document to the NRC's Office of the General Counsel and any others who have advised the Office of the Secretary that they wish to participate in the proceeding, so that the filer need not serve the documents on those participants separately. Therefore, applicants and other participants (or their counsel or representative) must apply for and receive a digital ID certificate before a hearing petition to intervene is filed so that they can obtain access to the document via the E-Filing system.

A person filing electronically using the NRC's adjudicatory E-Filing system may seek assistance by contacting the NRC Electronic Filing Help Desk through the ''Contact Us'' link located on the NRC's public Web site at *http://www.nrc.gov/site-help/e-submittals.html,* by email to *MSHD.Resource@nrc.gov,* or by a toll-free call at 1–866–672–7640. The NRC Electronic Filing Help Desk is available between 9 a.m. and 7 p.m., Eastern Time, Monday through Friday, excluding government holidays.

Participants who believe that they have a good cause for not submitting documents electronically must file an exemption request, in accordance with 10 CFR 2.302(g), with their initial paper filing stating why there is good cause for not filing electronically and requesting authorization to continue to submit documents in paper format. Such filings must be submitted by: (1) First class mail addressed to the Office of the Secretary of the Commission, U.S. Nuclear Regulatory Commission, Washington, DC 20555–0001, Attention:

Rulemaking and Adjudications Staff; or (2) courier, express mail, or expedited delivery service to the Office of the Secretary, 11555 Rockville Pike, Rockville, Maryland, 20852, Attention: Rulemaking and Adjudications Staff. Participants filing a document in this manner are responsible for serving the document on all other participants. Filing is considered complete by first-class mail as of the time of deposit in the mail, or by courier, express mail, or expedited delivery service upon depositing the document with the provider of the service. A presiding officer, having granted an exemption request from using E-Filing, may require a participant or party to use E-Filing if the presiding officer subsequently determines that the reason for granting the exemption from use of E-Filing no longer exists.

Documents submitted in adjudicatory proceedings will appear in the NRC's electronic hearing docket which is available to the public at *http://ehd1.nrc.gov/ehd/,* unless excluded pursuant to an order of the Commission, or the presiding officer. Participants are requested not to include personal privacy information, such as Social Security numbers, home addresses, or home phone numbers in their filings, unless an NRC regulation or other law requires submission of such information. However, in some instances, a petition will require including information on local residence in order to demonstrate a proximity assertion of interest in the proceeding. With respect to copyrighted works, except for limited excerpts that serve the purpose of the adjudicatory filings and would constitute a Fair Use application, participants are requested not to include copyrighted materials in their submission.

The Commission will issue a notice or order granting or denying a hearing request or intervention petition, designating the issues for any hearing that will be held and designating the Presiding Officer. A notice granting a hearing will be published in the **Federal Register** and served on the parties to the hearing.

For further details with respect to these license amendment applications, see the application for amendment which is available for public inspection in ADAMS and at the NRC's PDR. For additional direction on accessing information related to this document, see the ''Obtaining Information and Submitting Comments'' section of this document.

Duke Energy Progress, Inc., Docket Nos. 50–325 and 50–324, Brunswick Steam Electric Plant, Units 1 and 2, Brunswick County, North Carolina

Date of amendment request: August 29, 2016. A publicly-available version is in ADAMS under Accession No. ML16252A220.

Description of amendment request: The amendments would revise the Technical Specifications (TSs) to eliminate Section 5.5, ''lnservice Testing Program.'' A new defined term, ''lnservice Testing Program,'' is added to the TS Definitions section. This request is consistent with Technical Specification Task Force Traveler TSTF–545, Revision 3, ''TS lnservice Testing Program Removal & Clarify SR [Surveillance Requirement] Usage Rule Application to Section 5.5 Testing'' (ADAMS Accession No. ML15314A305).

Basis for proposed no significant hazards consideration determination: As required by 10 CFR 50.91(a), the licensee has provided its analysis of the issue of no significant hazards consideration, which is presented below:

1. Does the proposed amendment involve a significant increase in the probability or consequences of an accident previously evaluated?

Response: No.

The proposed change revises TS Chapter 5, ''Administrative Controls,'' Section 5.5, ''Programs and Manuals,'' by eliminating the ''Inservice Testing Program'' specification. Most requirements in the Inservice Testing Program are removed, as they are duplicative of requirements in the ASME [American Society of Mechanical Engineers] OM [Operations and Maintenance] Code, as clarified by Code Case OMN–20, ''Inservice Test Frequency.'' The remaining requirements in the Section 5.5 IST [Inservice Testing] Program are eliminated because the NRC has determined their inclusion in the TS is contrary to regulations. A new defined term, ''Inservice Testing Program,'' is added to the TS, which references the requirements of 10 CFR 50.55a(f).

Performance of inservice testing is not an initiator to any accident previously evaluated. As a result, the probability of occurrence of an accident is not significantly affected by the proposed change. Inservice test frequencies under Code Case OMN–20 are equivalent to the current testing period allowed by the TS with the exception that testing frequencies greater than 2 years may be extended by up to 6 months to facilitate test scheduling and consideration of plant operating conditions that may not be suitable for performance of the required testing. The testing frequency extension will not affect the ability of the components to mitigate any accident previously evaluated as the components are required to be operable during the testing period extension. Performance of inservice tests utilizing the allowances in OMN–20 will not significantly affect the reliability of the tested components. As a result, the availability of the affected components, as well as their ability to mitigate the consequences of accidents previously evaluated, is not affected.

Therefore, the proposed change does not involve a significant increase in the probability or consequences of an accident previously evaluated.

2. Does the proposed amendment create the possibility of a new or different kind of accident from any accident previously evaluated?

Response: No.

The proposed change does not alter the design or configuration of the plant. The proposed change does not involve a physical alteration of the plant; no new or different kind of equipment will be installed. The proposed change does not alter the types of inservice testing performed. In most cases, the frequency of inservice testing is unchanged. However, the frequency of testing would not result in a new or different kind of accident from any previously evaluated since the testing methods are not altered.

Therefore, the proposed change does not create the possibility of a new or different kind of accident from any previously evaluated.

3. Does the proposed amendment involve a significant reduction in a margin of safety?

Response: No.

The proposed change eliminates some requirements from the TS in lieu of requirements in the ASME Code, as modified by use of Code Case OMN–20. Compliance with the ASME Code is required by 10 CFR 50.55a. The proposed change also allows inservice tests with frequencies greater than 2 years to be extended by 6 months to facilitate test scheduling and consideration of plant operating conditions that may not be suitable for performance of the required testing. The testing frequency extension will not affect the ability of the components to respond to an accident as the components are required to be operable during the testing period extension. The proposed change will eliminate the existing TS SR 3.0.3 allowance to defer performance of missed inservice tests up to the duration of the specified testing frequency, and instead will require an assessment of the missed test on equipment operability. This assessment will consider the effect on margin of safety (equipment operability). Should the component be inoperable, the Technical Specifications provide actions to ensure that the margin of safety is protected. The proposed change also eliminates a statement that nothing in the ASME Code should be construed to supersede the requirements of any TS. The NRC has determined that statement to be incorrect. However, elimination of the statement will have no effect on plant operation or safety.

Therefore, the proposed change does not involve a significant reduction in a margin of safety.

The NRC staff has reviewed the licensee's analysis and, based on this review, it appears that the three

standards of 10 CFR 50.92(c) are satisfied. Therefore, the NRC staff proposes to determine that the amendment request involves no significant hazards consideration.

Attorney for licensee: Kathryn B. Nolan, Deputy General Counsel, 550 South Tryon Street, M/C DEC45A, Charlotte, NC 28202.

Acting NRC Branch Chief: Jeanne A. Dion.

Duke Energy Progress, Inc., Docket Nos. 50–325 and 50–324, Brunswick Steam Electric Plant, Units 1 and 2, Brunswick County, North Carolina

Date of amendment request: September 28, 2016. A publicly-available version is in ADAMS under Accession No. ML16287A415.

Description of amendment request: The amendments would revise the Technical Specifications (TSs) to be consistent with Technical Specification Task Force Traveler TSTF–423, Revision 1, to allow, for some systems, entry into hot shutdown rather than cold shutdown to repair equipment, if risk is assessed and managed consistent with the program in place for complying with the requirements of 10 CFR 50.65(a)(4). Changes proposed in TSTF–423 will be made to the Units' TSs for selected Required Action end states.

Basis for proposed no significant hazards consideration determination: As required by 10 CFR 50.91(a), the licensee has provided its analysis of the issue of no significant hazards consideration, which is presented below:

1. Does the proposed amendment involve a significant increase in the probability or consequences of an accident previously evaluated?

Response: No.

The proposed change allows a change to certain required end states when the TS Completion Times for remaining in power operation will be exceeded. Most of the requested TS changes are to permit an end state of hot shutdown (Mode 3) rather than an end state of cold shutdown (Mode 4) contained in the current TS. The request was limited to: (1) those end states where entry into the shutdown mode is for a short interval, (2) entry is initiated by inoperability of a single train of equipment or a restriction on a plant operational parameter, unless otherwise stated in the applicable TS, and (3) the primary purpose is to correct the initiating condition and return to power operation as soon as is practical. Risk insights from both the qualitative and quantitative risk assessments were used in specific TS assessments. Such assessments are documented in Section 6 of topical report NEDC–32988–A, Revision 2, ''Technical Justification to Support Risk-Informed Modification to Selected Required Action End States for BWR [Boiling-Water Reactor] Plants.'' They provide an integrated discussion of deterministic and probabilistic issues, focusing on specific TSs, which are used to support the proposed TS end state and associated restrictions. The NRC staff finds that the risk insights support the conclusions of the specific TS assessments. Therefore, the probability of an accident previously evaluated is not significantly increased, if at all. The consequences of an accident after adopting TSTF–423 are no different than the consequences of an accident prior to adopting TSTF–423. Therefore, the consequences of an accident previously evaluated are not significantly affected by this change. The addition of a requirement to assess and manage the risk introduced by this change will further minimize possible concerns.

Therefore, the proposed change does not involve a significant increase in the probability or consequences of an accident previously evaluated.

2. Does the proposed amendment create the possibility of a new or different kind of accident from any accident previously evaluated?

Response: No.

The proposed change does not involve a physical alteration of the plant (*i.e.,* no new or different type of equipment will be installed). If risk is assessed and managed, allowing a change to certain required end states when the TS Completion Times for remaining in power operation are exceeded (*i.e.,* entry into hot shutdown rather than cold shutdown to repair equipment) will not introduce new failure modes or effects and will not, in the absence of other unrelated failures, lead to an accident whose consequences exceed the consequences of accidents previously evaluated. The addition of a requirement to assess and manage the risk introduced by this change and the commitment by the licensee to adhere to the guidance in TSTF–IG–05–02, ''Implementation Guidance for TSTF–423, Revision 1, 'Technical Specifications End States, NEDC–32988–A,''' will further minimize possible concerns.

Thus, based on the above, this change does not create the possibility of a new or different kind of accident from an accident previously evaluated.

3. Does the proposed amendment involve a significant reduction in a margin of safety?

Response: No.

The proposed change allows, for some systems, entry into hot shutdown rather than cold shutdown to repair equipment, if risk is assessed and managed. The BWROG's [BWR Owner Group's] risk assessment approach is comprehensive and follows NRC staff guidance as documented in Regulatory Guides (RG) 1.174 and 1.177. In addition, the analyses show that the criteria of the three-tiered approach for allowing TS changes are met. The risk impact of the proposed TS changes was assessed following the three-tiered approach recommended in RG 1.177. A risk assessment was performed to justify the proposed TS changes. The net change to the margin of safety is insignificant.

Therefore, the proposed change does not involve a significant reduction in a margin of safety.

The NRC staff has reviewed the licensee's analysis and, based on this review, it appears that the three standards of 10 CFR 50.92(c) are satisfied. Therefore, the NRC staff proposes to determine that the amendment request involves no significant hazards consideration.

Attorney for licensee: Kathryn B. Nolan, Deputy General Counsel, 550 South Tryon Street, M/C DEC45A, Charlotte, NC 28202.

Acting NRC Branch Chief: Jeanne A. Dion.

Energy Northwest, Docket No. 50–397, Columbia Generating Station, Benton County, Washington

Date of amendment request: August 30, 2016. A publicly-available version is in ADAMS under Accession No. ML16245A273.

Description of amendment request: The amendment would reclassify reactor water cleanup (RWCU) piping, valves, pumps and mechanical modules located outside of primary and secondary containment in the radwaste building from Quality Group C to Quality Group D.

Basis for proposed no significant hazards consideration determination: As required by 10 CFR 50.91(a), the licensee has provided its analysis of the issue of no significant hazards consideration, which is presented below:

1. Does the proposed amendment involve a significant increase in the probability or consequences of an accident previously evaluated?

Response: No.

The proposed amendment does not result in a significant increase in the probability of an accident because Quality Group D standards are considered appropriate for water containing components which are not part of the reactor coolant pressure boundary but may contain radioactive materials. The probability of a line break is not increased since the materials, design, and fabrication of Quality Group C components is comparable to Quality Group D components. Differences between the two quality groups are limited primarily to quality assurance requirements. The use of Quality Group D components for portions of RWCU located in the radwaste building provides an adequate level of quality, commensurate with the importance of the functions to be performed by that portion of the system, and ensures that the facility can be operated without undue risk to the health and safety of the public.

All safety related equipment required to mitigate accidents is either significantly remote from, or separated by protective barriers from the reclassified portions of the system. The consequences of breaks considered in the portion of the RWCU system affected by this activity are calculated to not exceed regulatory limits for dose to control room personnel or the public.

Calculated results are not significantly different than those reported for the existing instrument line break analysis in [the Final Safety Analysis Report (FSAR)] Chapter 15.

[Therefore, the proposed change does not involve a significant increase in the probability or consequences of an accident previously evaluated.]

2. Does the proposed amendment create the possibility of a new or different kind of accident from any accident previously evaluated?

Response: No.

A postulated failure in the RWCU system piping would result in a high-energy line break (HELB) accident. High energy line breaks are already postulated and analyzed at various locations for portions of the RWCU system located in the reactor building. The existing instrument line break analysis was determined to bound a postulated worst case RWCU HELB. Since the offsite and onsite consequences of a postulated break in the reclassified portion of the RWCU is bounded by the existing instrument line break analyses, a new or different accident has not been created.

[Therefore, the proposed change does not create the possibility of a new or different kind of accident from any accident previously evaluated.]

3. Does the proposed amendment involve a significant reduction in a margin of safety?

Response: No.

The proposed amendment does not involve a significant reduction in a margin of safety. As noted in the technical and regulatory evaluation above, the reclassified portions of the system perform no active safety functions and will not result in radiological safety impact beyond that already assumed within the existing plant safety analyses.

[Therefore, the proposed change does not involve a significant reduction in a margin of safety.]

The NRC staff has reviewed the licensee's analysis and, based on this review, it appears that the three standards of 10 CFR 50.92(c) are satisfied. Therefore, the NRC staff proposes to determine that the amendment request involves no significant hazards consideration.

Attorney for licensee: William A. Horin, Esq., Winston & Strawn, 1700 K Street NW., Washington, DC 20006–3817.

NRC Branch Chief: Robert J. Pascarelli.

Exelon Generation Company, LLC, Docket Nos. STN 50–454 and STN 50–455, Byron Station, Unit Nos. 1 and 2, Ogle County, Illinois

Date of amendment request: October 7, 2016. A publicly-available version is in ADAMS under Accession No. ML16281A174.

Description of amendment request: The amendments would revise the Byron Station licensing basis for protection from tornado-generated missiles. Specifically, the Updated Final Safety Analysis Report (UFSAR) would be revised to identify the TORMIS Computer Code as the methodology used for assessing tornado-generated missile protection of unprotected plant structures, systems, and components (SSCs) and to describe the results of the Byron Station site-specific tornado hazard analysis.

Basis for proposed no significant hazards consideration determination: As required by 10 CFR 50.91(a), the licensee has provided its analysis of the issue of no significant hazards consideration, which is presented below:

1. Does the proposed change involve a significant increase in the probability or consequences of an accident previously evaluated?

Response: No.

The NRC TORMIS Safety Evaluation Report states the following:

''The current Licensing criteria governing tornado missile protection are contained in [NUREG–0800] Standard Review Plan (SRP) Section 3.5.1.4, [Missiles Generated by Natural Phenomena] and 3.5.2 [Structures, Systems and Components to be Protected from Externally Generated Missiles]. These criteria generally specify that safety-related systems be provided positive tornado missile protection (barriers) from the maximum credible tornado threat. However, SRP Section 3.5.1.4 includes acceptance criteria permitting relaxation of the above deterministic guidance, if it can be demonstrated that the probability of damage to unprotected essential safety-related features is sufficiently small.''

As permitted by these SRP sections, the combined probability will be maintained below an allowable level, *i.e.,* an acceptance criterion threshold, which reflects an extremely low probability of occurrence. SRP Section 2.2.3, ''Evaluation of Potential Accidents,'' established this threshold as approximately 1.0E–06 per year if, when combined with reasonable qualitative arguments, the realistic probability can be shown to be lower. The Byron Station analysis approach assumes that if the sum of the individual probabilities calculated for tornado missiles striking and damaging portions of safety-significant SSCs is greater than or equal to 1.0E–06 per year per unit, then installation of tornado missile protection barriers would be required for certain components to lower the total cumulative damage probability below the acceptance criterion of 1.0E–06 per year per unit. Conversely, if the total cumulative damage probability remains below the acceptance criterion of 1.0E–06 per year per unit, no additional tornado missile protection barriers would be required for any of the unprotected safety-significant components.

With respect to the probability of occurrence or the consequences of an accident previously evaluated in the UFSAR, the possibility of a tornado impacting the Byron Station site and causing damage to plant SSCs is a licensing basis event currently addressed in the UFSAR. The change being proposed (*i.e.,* the use of the TORMIS methodology for assessing tornado-generated missile protection of unprotected plant SSCs), does not affect the probability of a tornado strike on the site; however, from a licensing basis perspective, the proposed change does affect the probability that missiles generated by a tornado will strike and damage certain safety-significant plant SSCs. There are a defined number of safety-significant components that could theoretically be struck and damaged by tornado-generated missiles. The probability of tornado-generated missile hits on these ''important'' systems and components is calculated using the TORMIS probabilistic methodology. The combined probability of damage for unprotected safety-significant equipment will be maintained below the acceptance criterion of 1.0E–06 per year per unit to ensure adequate equipment remains available to safely shutdown the reactors, and maintain overall plant safety, should a tornado strike occur. Consequently, the proposed change does not constitute a significant increase in the probability of occurrence or the consequences of an accident based on the extremely low probability of damage caused by tornado-generated missiles and the commensurate extremely low probability of a radiological release.

Finally, the use of the TORMIS methodology will have no impact on accident initiators or precursors; does not alter the accident analysis assumptions or the manner in which the plant is operated or maintained; and does not affect the probability of operator error.

Based on the above discussion, the proposed change does not involve a significant increase in the probability or consequences of an accident previously evaluated.

2. Does the proposed change create the possibility of a new or different kind of accident from any accident previously evaluated?

Response: No.

The impact of a tornado strike on the Byron Station site is a licensing basis event that is explicitly addressed in the UFSAR. The proposed change simply involves recognition of the acceptability of using an analysis tool (*i.e.,* the TORMIS methodology) to perform probabilistic tornado missile damage calculations in accordance with approved regulatory guidance. The proposed change does not result in the creation of any new accident precursors; does not result in changes to any existing accident scenarios; and does not introduce any operational changes or mechanisms that would create the possibility of a new or different kind of accident.

Therefore, the proposed change will not create the possibility of a new or different kind of accident than those previously evaluated.

3. Does the proposed change involve a significant reduction in a margin of safety?

Response: No.

The existing Byron Station licensing basis regarding tornado missile protection of safety-significant SSCs assumes that missile protection barriers are provided for safety-

significant SSCs; or the unprotected component is assumed to be unavailable post-tornado. The results of the Byron Station TORMIS analysis have demonstrated that there is an extremely low probability, below an established regulatory acceptance limit, that these ''important'' SSCs could be struck and subsequently damaged by tornado-generated missiles. The change in licensing basis from protecting safety-significant SSCs from tornado missiles, to demonstrating that there is an extremely low probability that safety-significant SSCs will be struck and damaged by tornado-generated missiles, does not constitute a significant decrease in the margin of safety.

Therefore, the proposed change to use the TORMIS methodology does not involve a significant reduction in the margin of safety.

The NRC staff has reviewed the licensee's analysis and, based on this review, it appears that the three standards of 10 CFR 50.92(c) are satisfied. Therefore, the NRC staff proposes to determine that the requested amendments involve no significant hazards consideration.

Attorney for licensee: Tamra Domeyer, Associate General Counsel, Exelon Nuclear, 4300 Winfield Road, Warrenville, IL 60555.

Acting NRC Branch Chief: G. Edward Miller.

Exelon Generation Company, LLC, Docket No. 50–461, Clinton Power Station (CPS), Unit 1, DeWitt County, Illinois

Date of amendment request: August 11, 2016. A publicly-available version is in ADAMS under Accession No. ML16229A278.

Description of amendment request: The proposed change would eliminate the on-shift positions not needed for storage of the spent fuel in the spent fuel pool during the initial decommissioning period and the emergency response organization (ERO) positions not needed to respond to credible events. Additionally the licensee is proposing to revise the emergency action levels (EALs) to reflect those conditions applicable when the unit is in a permanently defueled condition.

Basis for proposed no significant hazards consideration determination: As required by 10 CFR 50.91(a), the licensee has provided its analysis of the issue of no significant hazards consideration, which is presented below:

1. Does the proposed amendment involve a significant increase in the probability or consequences of an accident previously evaluated?

Response: No.

The proposed changes to the CPS Emergency Plan do not impact the function of plant Structures, Systems, or Components (SSCs). The proposed changes do not involve the modification of any plant equipment or affect plant operation. The proposed changes do not affect accident initiators or precursors, nor do the proposed changes alter design assumptions. The proposed changes do not prevent the ability of the on-shift staff and ERO to perform their intended functions to mitigate the consequences of any accident or event that will be credible in the permanently defueled condition. The proposed changes only remove positions and remove certain EALs that will no longer be needed or credited in the Emergency Plan in the permanently defueled condition.

Therefore, the proposed changes do not involve a significant increase in the probability or consequences of an accident previously evaluated.

2. Does the proposed amendment create the possibility of a new or different kind of accident from any accident previously evaluated?

Response: No.

The proposed changes reduce the number of on-shift and ERO positions commensurate with the hazards associated with a permanently shutdown and defueled facility. The proposed changes also remove EALs which are no longer applicable to CPS in a permanently defueled condition. The proposed changes do not involve installation of new equipment or modification of existing equipment, so that no new equipment failure modes are introduced. Also, the proposed changes do not result in a change to the way that the equipment or facility is operated so that no new accident initiators are created.

Therefore, the proposed changes do not create the possibility of a new or different kind of accident from any previously evaluated.

3. Does the proposed amendment involve a significant reduction in a margin of safety?

Response: No.

Margin of safety is associated with confidence in the ability of the fission product barriers (*i.e.,* fuel cladding, reactor coolant system pressure boundary, and containment structure) to limit the level of radiation dose to the public. The proposed changes do not adversely affect existing plant safety margins or the reliability of the equipment assumed to operate in the safety analyses. There are no changes being made to safety analysis assumptions, safety limits, or limiting safety system settings that would adversely affect plant safety as a result of the proposed changes. The proposed changes are associated with the Emergency Plan and staffing and EAL schemes and do not impact operation of the plant or its response to transients or accidents.

The proposed changes do not affect the Technical Specifications. The proposed changes do not involve a change in the method of plant operation, and no accident analyses will be affected by the proposed changes. Safety analysis acceptance criteria are not affected by the proposed changes and margins of safety are maintained. The revised Emergency Plan will continue to provide the necessary response staff with the proposed changes.

Therefore, the proposed changes do not involve a significant reduction in a margin of safety.

The NRC staff has reviewed the licensee's analysis and, based on this review, it appears that the three standards of 10 CFR 50.92(c) are satisfied. Therefore, the NRC staff proposes to determine that the amendment request involves no significant hazards consideration.

Attorney for licensee: Tamra Domeyer, Associate General Counsel, Exelon Nuclear, 4300 Winfield Road, Warrenville, IL 60555.

Acting NRC Branch Chief: G. Edward Miller.

Exelon Generation Company, LLC, Docket Nos. 50–254 and 50–265, Quad Cities Nuclear Power Station (QCNPS), Units 1 and 2, Rock Island County, Illinois

Date of amendment request: October 20, 2016. A publicly-available version is in ADAMS under Accession No. ML16294A203.

Description of amendment request: The proposed amendment request supports the deletion, modification, and addition to the organization, staffing, and training requirements contained in Sections 1.0 and 5.0 of the Technical Specifications (TSs) after the license no longer authorizes operation of the reactor or placement or retention of fuel in the reactor pressure vessel. This proposed amendment also supports implementation of the Certified Fuel Handler training program.

Basis for proposed no significant hazards consideration determination: As required by 10 CFR 50.91(a), the licensee has provided its analysis of the issue of no significant hazards consideration, which is presented below:

1. Does the proposed amendment involve a significant increase in the probability or consequences of an accident previously evaluated?

Response: No.

The proposed changes would not take effect until QCNPS has permanently ceased operation and entered a permanently defueled condition. The proposed changes would revise the QCNPS TS by deleting or modifying certain portions of the TS administrative controls described in Section 5.0 of the TS that are no longer applicable to a permanently shutdown and defueled facility.

The proposed changes do not involve any physical changes to plant structures, systems, and components (SSCs) or the manner in which SSCs are operated, maintained, modified, tested, or inspected. The proposed changes do not involve a change to any safety limits, limiting safety system settings, limiting control settings, limiting conditions for operation, surveillance requirements, or design features.

The deletion and modification of provisions of the facility administrative

controls do not affect the design of SSCs necessary for safe storage of spent irradiated fuel or the methods used for handling and storage of such fuel in the Spent Fuel Pool (SFP). The proposed changes are administrative in nature and do not affect any accidents applicable to the safe management of spent irradiated fuel or the permanently shutdown and defueled condition of the reactor.

In a permanently defueled condition, the only credible accidents are the Design Basis Fuel Handling Accidents Inside Containment (the specific concern is dropping a fuel bundle over the Spent Fuel Pool; not the Reactor Vessel) and Spent Fuel Storage Buildings and Postulated Liquid Releases Due to Liquid Tank Failures. Other accidents such as Loss of Coolant Accident, Loss of Feedwater, and Reactivity and Power Distribution Anomalies will no longer be applicable to a permanently defueled reactor plant.

The probability of occurrence of previously evaluated accidents is not increased, since extended operation in a permanently defueled condition will be the only operation allowed, and therefore, bounded by the existing analyses. Additionally, the occurrence of postulated accidents associated with reactor operation is no longer credible in a permanently defueled reactor. This significantly reduces the scope of applicable accidents.

The proposed changes in the administrative controls do not affect the ability to successfully respond to previously evaluated accidents and do not affect radiological assumptions used in the evaluations. The proposed changes narrow the focus of nuclear safety concerns to those associated with safely maintaining spent nuclear fuel. These changes remove the implication that QCNPS can return to operation once the final certification required by 10 CFR 50.82(a)(1)(ii) is submitted to the NRC. Any event involving safe storage of spent irradiated fuel or the methods used for handling and storage of such fuel in the SFP would evolve slowly enough that no immediate response would be required to protect the health and safety of the public or station personnel. Adequate communications capability is provided to allow facility personnel to safely manage storage and handling of irradiated fuel. As a result, no changes to radiological release parameters are involved. There is no effect on the type or amount of radiation released, and there is no effect on predicted offsite doses in the event of an accident.

Therefore, the proposed changes do not involve a significant increase in the probability or consequence of an accident previously evaluated.

2. Does the proposed amendment create the possibility of a new or different kind of accident from any accident previously evaluated?

Response: No.

The proposed changes to delete and/or modify certain TS administrative controls have no impact on facility SSCs affecting the safe storage of spent irradiated fuel, or on the methods of operation of such SSCs, or on the handling and storage of spent irradiated fuel itself. The proposed changes do not result in different or more adverse failure modes or accidents than previously evaluated because the reactor will be permanently shut down and defueled and QCNPS will no longer be authorized to operate the reactor. The proposed changes will continue to require proper control and monitoring of safety significant parameters and activities.

The proposed changes do not result in any new mechanisms that could initiate damage to the remaining relevant safety barriers in support of maintaining the plant in a permanently shutdown and defueled condition (*e.g.,* fuel cladding and SFP cooling). Since extended operation in a defueled condition will be the only operation allowed, and therefore bounded by the existing analyses, such a condition does not create the possibility of a new or different kind of accident.

The proposed changes do not alter the protection system design or create new failure modes. The proposed changes do not involve a physical alteration of the plant, and no new or different kind of equipment will be installed. Consequently, there are no new initiators that could result in a new or different kind of accident.

Therefore, the proposed changes do not create the possibility of a new or different kind of accident from any accident previously evaluated.

3. Does the proposed amendment involve a significant reduction in a margin of safety?

Response: No.

The proposed changes involve deleting and/or modifying certain TS administrative controls once the QCNPS facility has been permanently shutdown and defueled. As specified in 10 CFR 50.82(a)(2), the 10 CFR 50 license for QCNPS will no longer authorize operation of the reactor or emplacement or retention of fuel into the reactor vessel following submittal of the certifications required by 10 CFR 50.82(a)(1). As a result, the occurrence of certain design basis postulated accidents are no longer considered credible when the reactor is permanently defueled.

The only remaining credible accidents are the Design Basis Fuel Handling Accidents Inside Containment and Spent Fuel Storage Buildings (the specific concern is dropping a fuel bundle over the Spent Fuel Pool; not the Reactor Vessel) and the Postulated Liquid Releases Due to Liquid Tank Failures. The proposed changes do not adversely affect the inputs or assumptions of any of the design basis analyses that impact the Design Basis Fuel Handling Accidents.

The proposed changes are limited to those portions of the TS administrative controls that are not related to the safe storage and maintenance of spent irradiated fuel.

These proposed changes do not directly involve any physical equipment limits or parameters. The requirements that are proposed to be revised and/or deleted from the QCNPS TS are not credited in the existing accident analysis for the remaining applicable postulated accidents; therefore, they do not contribute to the margin of safety associated with the accident analysis. Certain postulated DBAs [design-basis accidents] involving the reactor are no longer possible because the reactor will be permanently shut down and defueled and QCNPS will no longer be authorized to operate the reactor.

Therefore, the proposed changes do not involve a significant reduction in the margin of safety.

The NRC staff has reviewed the licensee's analysis and, based on this review, it appears that the three standards of 10 CFR 50.92(c) are satisfied. Therefore, the NRC staff proposes to determine that the requested amendments involve no significant hazards consideration.

Attorney for licensee: Tamra Domeyer, Associate General Counsel, Exelon Nuclear, 4300 Winfield Road, Warrenville, IL 60555.

Acting NRC Branch Chief: G. Edward Miller.

Florida Power & Light Company, Docket Nos. 50–250 and 50–251, Turkey Point Nuclear Generating Unit Nos. 3 and 4, Miami-Dade County, Florida

Date of amendment request: April 4, 2016, as supplemented by letters dated September 1, 2016, and November 10, 2016. Publicly-available versions are in ADAMS under Accession Nos. ML16110A266, ML16260A399, and ML16323A313, respectively.

Description of amendment request: The amendments would revise the Technical Specification (TS) requirements for snubbers and add a new TS to the Administrative Controls section of the TSs describing the licensee's Snubber Testing Program. The amendments would revise the snubber TS surveillance requirements (SRs) by deleting specific requirements from the TS SRs and replacing them with a requirement to demonstrate snubber operability in accordance with the licensee-controlled Snubber Testing Program. The proposed changes include additions to, deletions from, and conforming administrative changes to the TSs.

The license amendment request was originally noticed in the **Federal Register** (FR) on July 5, 2016 (81 FR 43652). The notice is being reissued in its entirety because the licensee's supplement dated November 10, 2016, expanded the scope of the application by proposing to delete a portion of the snubber SR that requires inspections per another TS that is no longer applicable to snubbers.

Basis for proposed no significant hazards consideration determination: As required by 10 CFR 50.91(a), the licensee has provided its analysis of the issue of no significant hazards consideration, which is presented below:

1. Does the proposed change involve a significant increase in the probability or consequences of an accident previously evaluated?

Response: No.

The proposed changes would revise TS SR 4.7.6 to conform the TS to the revised surveillance program for snubbers. Snubber examination, testing and service life monitoring will continue to meet the requirements of 10 CFR 50.55a(g).

Snubber examination, testing and service life monitoring is not an initiator of any accident previously evaluated. Therefore, the probability of an accident previously evaluated is not significantly increased.

Snubbers will continue to be demonstrated OPERABLE by performance of a program for examination, testing and service life monitoring in compliance with 10 CFR 50.55a or authorized alternatives. The proposed change to the TS 3.7.6 Action for inoperable snubbers is administrative in nature and is required for consistency with the proposed change to TS SR 4.7.6. The proposed change does not adversely affect plant operations, design functions or analyses that verify the capability of systems, structures, and components to perform their design functions[;] therefore, the consequences of accidents previously evaluated are not significantly increased.

Therefore, it is concluded that this change does not involve a significant increase in the probability or consequences of an accident previously evaluated.

2. Does the proposed change create the possibility of a new or different kind of accident from any accident previously evaluated?

Response: No.

The proposed changes do not involve any physical alteration of plant equipment. The proposed changes do not alter the method by which any safety-related system performs its function. As such, no new or different types of equipment will be installed, and the basic operation of installed equipment is unchanged. The methods governing plant operation and testing remain consistent with current safety analysis assumptions.

Therefore, it is concluded that this change does not create the possibility of a new or different kind of accident from any accident previously evaluated.

3. Does the proposed change involve a significant reduction in a margin of safety?

Response: No.

The proposed changes ensure snubber examination, testing and service life monitoring will continue to meet the requirements of 10 CFR 50.55a(g). Snubbers will continue to be demonstrated OPERABLE by performance of a program for examination, testing and service life monitoring in compliance with 10 CFR 50.55a or authorized alternatives.

The proposed change to the TS 3.7.6 Action for inoperable snubbers is administrative in nature and is required for consistency with the proposed change to TS SR 4.7.6.

Therefore, it is concluded that the proposed change does not involve a significant reduction in a margin of safety.

The NRC staff has reviewed the licensee's analysis and, based on this review, it appears that the three standards of 10 CFR 50.92(c) are satisfied. Therefore, the NRC staff proposes to determine that the amendment request involves no significant hazards consideration.

Attorney for licensee: William S. Blair, Managing Attorney—Nuclear, Florida Power & Light Company, 700 Universe Blvd., MS LAW/JB, Juno Beach, FL 33408–0420.

Acting NRC Branch Chief: Jeanne A. Dion.

Florida Power & Light Company, et al., Docket Nos. 50–335 and 50–389, St. Lucie Plant, Unit Nos. 1 and 2, St. Lucie County, Florida

Date of amendment request: September 16, 2016. A publicly-available version is in ADAMS under Accession No. ML16271A181.

Description of amendment request: The amendments would revise the Unit 1 and Unit 2 Technical Specifications (TSs) by removing certain process radiation monitors and placing their requirements in a licensee-controlled manual. The amendments would also change the Unit 2 containment particulate radiation monitor range.

Basis for proposed no significant hazards consideration determination: As required by 10 CFR 50.91(a), the licensee has provided its analysis of the issue of no significant hazards consideration, which is presented below:

1. Does the proposed amendment involve a significant increase in the probability or consequences of an accident previously evaluated?

Response: No.

The effluent radiation monitors are not event initiators, nor are they credited in the mitigation of any event or credited in the PRA [Probabilistic Risk Assessment]. Relocating the monitors to the ODCM [Offsite Dose Calculation Manual] does not adversely impact the monitor function, and does not affect the accident analyses in any manner.

The Unit 2 containment atmosphere particulate radiation monitor is credited in the Leak-Before-Break analyses, where it states that ''the leakage detection systems are capable of detecting the specified leak rate'' and that the leakage detection systems ''are consistent with Regulatory Guide 1.45.'' Correcting the TS instrument range for the monitor does not adversely impact the monitor function, *i.e.,* its capability to detect leakage. This change does not affect the accident analyses in any manner.

Therefore, the proposed amendment does not involve a significant increase in the probability or consequences of an accident previously evaluated.

2. Does the proposed amendment create the possibility of a new or different kind of accident from any previously evaluated?

Response: No.

The proposed changes correct a legacy error in the Unit 2 TS, and the TS removal of effluent monitors and their subsequent relocation to the ODCM do not change the function or capabilities of any equipment, and do not involve the addition or modification of any plant equipment. Also, the proposed change does not alter the design, configuration, or method of operation of the plant. The subject monitors remain capable of performing their design functions.

Therefore, the proposed change does not create the possibility of a new or different kind of accident from any accident previously evaluated.

3. Does the proposed amendment involve a significant reduction in a margin of safety?

Response: No.

The proposed changes remove select effluent monitors from the TSs and relocate their requirements to the ODCM and correct a legacy error in the Unit 2 TSs, and do not involve the addition or modification of any plant equipment. The changes do not modify the plant or plant equipment, and do not change the manner in which structures, systems or components are design[ed] or evaluated.

Therefore, the proposed change does not involve a significant reduction in a margin of safety.

The NRC staff has reviewed the licensee's analysis and, based on this review, it appears that the three standards of 50.92(c) are satisfied. Therefore, the NRC staff proposes to determine that the amendment request involves no significant hazards consideration.

Attorney for licensee: William S. Blair, Managing Attorney—Nuclear, Florida Power & Light Company, 700 Universe Boulevard, MS LAW/JB, Juno Beach, FL 33408–0420.

Acting NRC Branch Chief: Jeanne A. Dion.

Indiana Michigan Power Company (I&M), Docket Nos. 50–315 and 50–316, Donald C. Cook Nuclear Plant, Units 1 and 2, Berrien County, Michigan

Date of amendment request: October 18, 2016. A publicly-available version is in ADAMS under Accession No. ML16294A257.

Description of amendment request: The proposed changes would revise Technical Specification 5.5.14, ''Containment Leakage Rate Testing Program,'' to clarify the containment leak rate testing pressure criteria.

Basis for proposed no significant hazards consideration determination: As required by 10 CFR 50.91(a), the licensee has provided its analysis of the issue of no significant hazards consideration, which is presented below:

1. Does the proposed change involve a significant increase in the probability of

occurrence or consequences of an accident previously evaluated?

Response: No.

The proposed changes do not involve changes to the installed structures, systems or components of the facility. The proposed change is consistent with Westinghouse Owners Group Standard Technical Specification language for the Containment Leak Rate Program.

Therefore, the proposed change does not involve a significant increase in the probability or consequences of an accident previously evaluated.

2. Does the proposed change create the possibility of a new or different kind of accident from any accident previously evaluated?

Response: No.

The proposed change does not introduce a new mode of plant operation and does not involve physical modification to the plant. The change does not introduce new accident initiators or impact assumptions made in the safety analysis. Testing requirements continue to demonstrate that the Limiting Conditions for Operation are met and the system components are functional.

Therefore, the proposed change does not create the possibility of a new or different kind of accident from any previously evaluated.

3. Does the proposed change involve a significant reduction in a margin of safety?

Response: No.

The proposed change does not exceed or alter a design basis or safety limit, so there is no significant reduction in the margin of safety.

Therefore, the proposed change does not involve a significant reduction in a margin of safety.

The NRC staff has reviewed the licensee's analysis and, based on this review, it appears that the three standards of 10 CFR 50.92(c) are satisfied. Therefore, the NRC staff proposes to determine that the amendment request involves no significant hazards consideration.

Attorney for licensee: Robert B. Haemer, Senior Nuclear Counsel, One Cook Place, Bridgman, MI 49106.

NRC Branch Chief: David J. Wrona.

Pacific Gas and Electric Company, Docket Nos. 50–275 and 50–323, Diablo Canyon Nuclear Power Plant, Units 1 and 2 (DCPP), San Luis Obispo County, California

Date of amendment request: October 25, 2016. A publicly-available version is in ADAMS under Accession No. ML16315A184.

Description of amendment request: The proposed amendments would revise the Emergency Plan (E-Plan) for DCPP to adopt the Nuclear Energy Institute's (NEI's) revised Emergency Action Level (EAL) scheme described in NEI 99–01, Revision 6, ''Development of Emergency Action Levels for Non-Passive Reactors,'' November 2012 (ADAMS Accession No. ML12326A805). NEI–99–01, Revision 6, has been endorsed by the NRC by letter dated March 28, 2013 (ADAMS Accession No. ML12346A463). Currently approved E-Plan EAL schemes for DCPP are based on the guidance established in NEI 99–01, Revision 4, ''Methodology for Development of Emergency Action Levels,'' January 2003 (ADAMS Accession No. ML030230250), except for security-related EALs, which are based on the guidance established in NEI 99–01, Revision 5, ''Methodology for Development of Emergency Action Levels,'' February 2008 (ADAMS Accession No. ML080450149).

Basis for proposed no significant hazards consideration determination: As required by 10 CFR 50.91(a), the licensee has provided its analysis of the issue of no significant hazards consideration, which is presented below:

1. Does the proposed change involve a significant increase in the probability or consequences of an accident previously evaluated?

Response: No.

The proposed changes to the Diablo Canyon Power Plant (DCPP) emergency action levels (EALs) do not impact the physical function of plant structures, systems, or components (SSCs) or the manner in which SSCs perform their design function. The proposed changes neither adversely affect accident initiators or precursors, nor alter design assumptions. The proposed changes do not alter or prevent the ability of SSCs to perform their intended function to mitigate the consequences of an initiating event within assumed acceptance limits. No operating procedures or administrative controls that function to prevent or mitigate accidents are affected by the proposed changes.

Therefore, the proposed change does not involve a significant increase in the probability or consequences of an accident previously evaluated.

2. Does the proposed change create the possibility of a new or different accident from any accident previously evaluated?

Response: No.

The proposed changes do not involve a physical alteration of the plant (*i.e.,* no new or different type of equipment will be installed or removed) or a change in the method of plant operation. The proposed changes will not introduce failure modes that could result in a new accident, and the change does not alter assumptions made in the safety analysis. The proposed changes to the DCPP EALs are not initiators of any accidents.

Therefore, the proposed change does not create the possibility of a new or different accident from any accident previously evaluated.

3. Does the proposed change involve a significant reduction in a margin of safety?

Response: No.

Margin of safety is associated with the ability of the fission product barriers (*i.e.,* fuel cladding, reactor coolant system pressure boundary, and containment structure) to limit the level of radiation dose to the public.

The proposed changes do not impact operation of the plant or its response to transients or accidents. The proposed changes do not affect the Technical Specifications or the Operating License. The proposed changes do not involve a change in the method of plant operation, and no accident analyses will be affected by the proposed changes. Additionally, the proposed changes will not relax any criteria used to establish safety limits and will not relax any safety system settings. The safety analysis acceptance criteria are not affected by these changes. The proposed changes will not result in plant operation in a configuration outside the design basis. The proposed changes do not adversely affect systems that respond to safely shut down the plant and to maintain the plant in a safe shutdown condition. The E-Plan will continue to activate an emergency response commensurate with the extent of degradation of plant safety.

Therefore, the proposed change does not involve a significant reduction in a margin of safety.

The NRC staff has reviewed the licensee's analysis and, based on this review, it appears that the three standards of 10 CFR 50.92(c) are satisfied. Therefore, the NRC staff proposes to determine that the amendment requests involve no significant hazards consideration.

Attorney for licensee: Jennifer Post, Esq., Pacific Gas and Electric Company, P.O. Box 7442, San Francisco, California 94120.

NRC Branch Chief: Robert J. Pascarelli.

Southern Nuclear Operating Company, Inc., Docket Nos. 50–348 and 50–364, Joseph M. Farley Nuclear Plant (Farley), Units 1 and 2, Houston County, Alabama

Date of amendment request: October 11, 2016. A publicly-available version is in ADAMS under Accession No. ML16285A351.

Description of amendment request: The amendment would add Technical Specification (TS) requirements for unavailable barriers by adding Limiting Condition for Operation (LCO) 3.0.9, consistent with NRC-approved Technical Specification Task Force (TSTF) Improved Standard Technical Specifications Change Traveler TSTF–427, Revision 2, ''Allowance for Non-Technical Specification Barrier Degradation on Supported System OPERABILITY.'' The availability of this TS improvement was published in the **Federal Register** on October 3, 2006 (71 FR 58444), as part of the consolidated line item improvement process (CLIIP).

Basis for proposed no significant hazards consideration determination: As required by 10 CFR 50.91(a), the licensee has provided its analysis of the issue of no significant hazards consideration by confirming the applicability of the Farley, Units 1 and 2, to the model proposed no significant hazards consideration published on October 3, 2006, as part of the CLIIP, as referenced below:

Criterion 1—The Proposed Change Does Not Involve a Significant Increase in the Probability or Consequences of an Accident Previously Evaluated

The proposed change allows a delay time for entering a supported system technical specification (TS) when the inoperability is due solely to an unavailable barrier if risk is assessed and managed. The postulated initiating events which may require a functional barrier are limited to those with low frequencies of occurrence, and the overall TS system safety function would still be available for the majority of anticipated challenges. Therefore, the probability of an accident previously evaluated is not significantly increased, if at all. The consequences of an accident while relying on the allowance provided by proposed LCO 3.0.9 are no different than the consequences of an accident while relying on the TS required actions in effect without the allowance provided by proposed LCO 3.0.9. Therefore, the consequences of an accident previously evaluated are not significantly affected by this change. The addition of a requirement to assess and manage the risk introduced by this change will further minimize possible concerns. Therefore, this change does not involve a significant increase in the probability or consequences of an accident previously evaluated.

Criterion 2—The Proposed Change Does Not Create the Possibility of a New or Different Kind of Accident From any Previously Evaluated

The proposed change does not involve a physical alteration of the plant (no new or different type of equipment will be installed). Allowing delay times for entering supported system TS when inoperability is due solely to an unavailable barrier, if risk is assessed and managed, will not introduce new failure modes or effects and will not, in the absence of other unrelated failures, lead to an accident whose consequences exceed the consequences of accidents previously evaluated. The addition of a requirement to assess and manage the risk introduced by this change will further minimize possible concerns. Thus, this change does not create the possibility of a new or different kind of accident from an accident previously evaluated.

Criterion 3—The Proposed Change Does Not Involve a Significant Reduction in the Margin of Safety

The proposed change allows a delay time for entering a supported system TS when the inoperability is due solely to an unavailable barrier, if risk is assessed and managed. The postulated initiating events which may require a functional barrier are limited to those with low frequencies of occurrence, and the overall TS system safety function would still be available for the majority of anticipated challenges. The risk impact of the proposed TS changes was assessed following the three-tiered approach recommended in RG [Regulatory Guide] 1.177. A bounding risk assessment was performed to justify the proposed TS changes. This application of LCO 3.0.9 is predicated upon the licensee's performance of a risk assessment and the management of plant risk. The net change to the margin of safety is insignificant as indicated by the anticipated low levels of associated risk (ICCDP [incremental conditional core damage probability] and ICLERP [incremental conditional large early release probability]) as shown in Table 1 of Section 3.1.1 in the Safety Evaluation. Therefore, this change does not involve a significant reduction in a margin of safety.

The NRC staff has reviewed the licensee's analysis and, based on this review, it appears that the three standards of 10 CFR 50.92(c) are satisfied. Therefore, the NRC staff proposes to determine that the amendment request involves no significant hazards consideration.

Attorney for licensee: Jennifer M. Buettner, Associate General Counsel, Southern Nuclear Operating Company, 40 Inverness Center Parkway, Birmingham, AL 35201.

NRC Branch Chief: Michael T. Markley.

Wolf Creek Nuclear Operating Corporation (WCNOC), Docket No. 50–482, Wolf Creek Generating Station (WCGS), Coffey County, Kansas

Date of amendment request: September 30, 2016. A publicly-available version is in ADAMS under Accession No. ML16279A377.

Description of amendment request: The amendment would revise the emergency action level (EAL) scheme used at WCGS. The currently approved EAL scheme is based on Nuclear Management and Resources Council/National Environmental Studies Project (NUMARC/NESP)–007, Revision 2, ''Methodology for Development of Emergency Action Levels,'' January 1992 (ADAMS Accession No. ML041120174). The proposed change would allow WCNOC to adopt an EAL scheme which is based on the guidance established in Nuclear Energy Institute (NEI) 99–01, Revision 6, ''Development of Emergency Action levels for Non-Passive Reactors,'' November 2012 (ADAMS Accession No. ML12326A805). NEI 99–01, Revision 6 has been endorsed by the NRC by letter dated March 28, 2013 (ADAMS Accession No. ML12346A463).

Basis for proposed no significant hazards consideration determination: As required by 10 CFR 50.91(a), the licensee has provided its analysis of the issue of no significant hazards consideration, which is presented below:

1. Does the proposed change involve a significant increase in the probability or consequences of an accident previously evaluated?

Response: No.

The proposed changes to the WCGS EALs do not impact the physical function of plant structures, systems or components [(SSCs)] or the manner in which SSCs perform their design function. The proposed changes neither adversely affect accident initiators or precursors, nor alter design assumptions. The proposed changes do not alter or prevent the ability of SSCs to perform their intended function to mitigate the consequences of an initiating event within assumed acceptance limits. No operating procedures or administrative controls that function to prevent or mitigate accidents are affected by the proposed changes.

Therefore, the proposed changes do not involve a significant increase in the probability or consequences of an accident previously evaluated.

2. Does the proposed change create the possibility of a new or different kind of accident from any accident previously evaluated?

Response: No.

The proposed changes do not involve a physical alteration of the plant (*i.e.,* no new or different types of equipment will be installed) or a change in the method of plant operation. The proposed changes will not introduce failure modes that could result in a new accident, and the changes do not alter assumptions made in the safety analysis. The proposed changes to the WCGS EALs are not initiators of any accidents.

Therefore, the proposed changes do not create the possibility of a new or different kind of accident from any previously evaluated.

3. Does the proposed change involve a significant reduction in a margin of safety?

Response: No.

Margin of safety is associated with the ability of the fission product barriers (*i.e.,* fuel cladding, reactor coolant system pressure boundary, and containment structure) to limit the level of radiation dose to the public. The proposed changes do not impact operation of the plant or its response to transients or accidents. The changes do not affect the Technical Specifications or the operating license. The proposed changes do not involve a change in the method of plant operation, and no accident analyses will be affected by the proposed changes. Additionally, the proposed changes will not relax any criteria used to establish safety limits and will not relax any safety system settings. The safety analysis acceptance criteria are not affected by these changes. The proposed changes will not result in plant operation in a configuration outside the design basis. The proposed changes do not adversely affect systems that respond to safely shut down the plant and to maintain

the plant in a safe shutdown condition. The emergency plan will continue to activate an emergency response commensurate with the extent of degradation of plant safety.

[Therefore, the proposed changes do not involve a significant reduction in a margin of safety.]

The NRC staff has reviewed the licensee's analysis and, based on this review, it appears that the three standards of 10 CFR 50.92(c) are satisfied. Therefore, the NRC staff proposes to determine that the amendment request involves no significant hazards consideration.

Attorney for licensee: Jay Silberg, Esq., Pillsbury Winthrop Shaw Pittman LLP, 2300 N Street NW., Washington, DC 20037.

NRC Branch Chief: Robert J. Pascarelli.

III. Notice of Issuance of Amendments to Facility Operating Licenses and Combined Licenses

During the period since publication of the last biweekly notice, the Commission has issued the following amendments. The Commission has determined for each of these amendments that the application complies with the standards and requirements of the Atomic Energy Act of 1954, as amended (the Act), and the Commission's rules and regulations. The Commission has made appropriate findings as required by the Act and the Commission's rules and regulations in 10 CFR Chapter I, which are set forth in the license amendment.

A notice of consideration of issuance of amendment to facility operating license or combined license, as applicable, proposed no significant hazards consideration determination, and opportunity for a hearing in connection with these actions, was published in the **Federal Register** as indicated.

Unless otherwise indicated, the Commission has determined that these amendments satisfy the criteria for categorical exclusion in accordance with 10 CFR 51.22. Therefore, pursuant to 10 CFR 51.22(b), no environmental impact statement or environmental assessment need be prepared for these amendments. If the Commission has prepared an environmental assessment under the special circumstances provision in 10 CFR 51.22(b) and has made a determination based on that assessment, it is so indicated.

For further details with respect to the action see (1) the applications for amendment, (2) the amendment, and (3) the Commission's related letter, Safety Evaluation and/or Environmental Assessment as indicated. All of these items can be accessed as described in the ''Obtaining Information and Submitting Comments'' section of this document.

Entergy Nuclear Operations, Inc., Docket Nos. 50–247 and 50–286, Indian Point Nuclear Generating Unit Nos. 2 and 3, Westchester County, New York

Date of amendment request: December 10, 2015, as supplemented by letters dated March 2, July 7, and October 6, 2016.

Brief description of amendments: The amendments revised Technical Specification (TS) 3.1.3, ''Moderator Temperature Coefficient (MTC),'' and TS 5.6.5, ''Core Operating Limits Report (COLR),'' to allow exemption from the normally required near end-of-life MTC measurement by placing a set of conditions on reactor core operation. If these conditions are met, the MTC measurement could be replaced by a calculated value.

Date of issuance: November 15, 2016.

Effective date: As of the date of issuance, and shall be implemented within 30 days.

Amendment Nos.: Unit 2–285; Unit 3–261. A publicly-available version is in ADAMS under Accession No. ML16215A243; documents related to these amendments are listed in the Safety Evaluation enclosed with the amendments.

Facility Operating License Nos. DPR–26 and DPR–64: The amendments revised the Facility Operating Licenses and the TSs.

Date of initial notice in Federal Register: April 5, 2016 (81 FR 19647). The supplemental letters dated March 2, July 7, and October 6, 2016, provided additional information that clarified the application, did not expand the scope of the application as originally noticed, and did not change the NRC staff's original proposed no significant hazards consideration determination as published in the **Federal Register**.

The Commission's related evaluation of the amendment is contained in a Safety Evaluation dated November 15, 2016.

No significant hazards consideration comments received: No.

Exelon Generation Company, LLC and PSEG Nuclear LLC, Docket Nos. 50–277 and 50–278, Peach Bottom Atomic Power Station, Units 2 and 3, York and Lancaster Counties, Pennsylvania

Date of amendment request: December 3, 2015, as supplemented by letters dated June 9, 2016, August 2, 2016, and November 8, 2016.

Brief description of amendments: The amendments revised the technical specification (TS) surveillance requirements associated with the emergency diesel generator (EDG) fuel oil transfer system. Specifically, the amendments allow for the crediting of manual actions, in lieu of automatic actions, without having to declare the EDGs inoperable.

Date of issuance: November 16, 2016.

Effective date: As of the date of issuance and shall be implemented within 120 days of issuance.

Amendments Nos.: Unit 2–311; Unit 3–315. A publicly-available version is in ADAMS under Accession No. ML16292A188; documents related to these amendments are listed in the Safety Evaluation enclosed with the amendments.

Renewed Facility Operating License Nos. DPR–44 and DPR–56: The amendments revised the Renewed Facility Operating Licenses and TSs.

Date of initial notice in Federal Register: February 2, 2016 (81 FR 5498). The supplemental letters dated June 9, 2016, August 2, 2016, and November 8, 2016, provided additional information that clarified the application, did not expand the scope of the application as originally noticed, and did not change the staff's original proposed no significant hazards consideration determination as published in the **Federal Register**.

The Commission's related evaluation of the amendments is contained in a Safety Evaluation dated November 16, 2016.

No significant hazards consideration comments received: No.

Southern Nuclear Operating Company, Docket Nos. 50–348 and 50–364, Joseph M. Farley Nuclear Plant, Units 1 and 2, Houston County, Alabama

Date of amendment request: November 20, 2015, as supplemented by letters dated January 12, April 11, and June 30, 2016.

Brief description of amendments: The amendments revised the setpoint requirements in Technical Specification (TS) 3.3.5, ''Loss of Power (LOP) Diesel Generator (DG) Start Instrumentation.'' The change was requested to fulfill a license condition to eliminate the manual actions in lieu of automatic degraded voltage protection to assure adequate voltage to safety-related equipment during design-basis events.

Date of issuance: November 17, 2016.

Effective date: As of the date of issuance and shall be implemented within 90 days of issuance.

Amendment Nos.: Unit 1–206; Unit 2–202. A publicly-available version is in ADAMS under Accession No. ML16196A161; documents related to

these amendments are listed in the Safety Evaluation enclosed with the amendments.

Renewed Facility Operating License Nos. NPF–2 and NPF–8: The amendments revised the Renewed Facility Operating Licenses and TSs.

*Date of initial notice in **Federal Register**:* February 16, 2016 (81 FR 7842). The supplemental letters dated April 11, 2016, and June 30, 2016, provided additional information that clarified the application, did not expand the scope of the application as originally noticed, and did not change the staff's original proposed no significant hazards consideration determination as published in the **Federal Register**.

The Commission's related evaluation of the amendments is contained in a Safety Evaluation dated November 17, 2016.

No significant hazards consideration comments received: No.

IV. Notice of Issuance of Amendments to Facility Operating Licenses and Combined Licenses and Final Determination of No Significant Hazards Consideration and Opportunity for a Hearing (Exigent Public Announcement or Emergency Circumstances)

During the period since publication of the last biweekly notice, the Commission has issued the following amendments. The Commission has determined for each of these amendments that the application for the amendment complies with the standards and requirements of the Atomic Energy Act of 1954, as amended (the Act), and the Commission's rules and regulations. The Commission has made appropriate findings as required by the Act and the Commission's rules and regulations in 10 CFR Chapter I, which are set forth in the license amendment.

Because of exigent or emergency circumstances associated with the date the amendment was needed, there was not time for the Commission to publish, for public comment before issuance, its usual notice of consideration of issuance of amendment, proposed no significant hazards consideration determination, and opportunity for a hearing.

For exigent circumstances, the Commission has either issued a **Federal Register** notice providing opportunity for public comment or has used local media to provide notice to the public in the area surrounding a licensee's facility of the licensee's application and of the Commission's proposed determination of no significant hazards consideration. The Commission has provided a reasonable opportunity for the public to comment, using its best efforts to make available to the public means of communication for the public to respond quickly, and in the case of telephone comments, the comments have been recorded or transcribed as appropriate and the licensee has been informed of the public comments.

In circumstances where failure to act in a timely way would have resulted, for example, in derating or shutdown of a nuclear power plant or in prevention of either resumption of operation or of increase in power output up to the plant's licensed power level, the Commission may not have had an opportunity to provide for public comment on its no significant hazards consideration determination. In such case, the license amendment has been issued without opportunity for comment. If there has been some time for public comment but less than 30 days, the Commission may provide an opportunity for public comment. If comments have been requested, it is so stated. In either event, the State has been consulted by telephone whenever possible.

Under its regulations, the Commission may issue and make an amendment immediately effective, notwithstanding the pendency before it of a request for a hearing from any person, in advance of the holding and completion of any required hearing, where it has determined that no significant hazards consideration is involved.

The Commission has applied the standards of 10 CFR 50.92 and has made a final determination that the amendment involves no significant hazards consideration. The basis for this determination is contained in the documents related to this action. Accordingly, the amendments have been issued and made effective as indicated.

Unless otherwise indicated, the Commission has determined that these amendments satisfy the criteria for categorical exclusion in accordance with 10 CFR 51.22. Therefore, pursuant to 10 CFR 51.22(b), no environmental impact statement or environmental assessment need be prepared for these amendments. If the Commission has prepared an environmental assessment under the special circumstances provision in 10 CFR 51.12(b) and has made a determination based on that assessment, it is so indicated.

For further details with respect to the action see (1) the application for amendment, (2) the amendment to Facility Operating License or Combined License, as applicable, and (3) the Commission's related letter, Safety Evaluation and/or Environmental Assessment, as indicated. All of these items can be accessed as described in the ''Obtaining Information and Submitting Comments'' section of this document.

A. Opportunity To Request a Hearing and Petition for Leave To Intervene

The Commission is also offering an opportunity for a hearing with respect to the issuance of the amendment.

Within 60 days after the date of publication of this notice, any persons (petitioner) whose interest may be affected by this action may file a request for a hearing and a petition to intervene (petition) with respect to the action. Petitions shall be filed in accordance with the Commission's ''Agency Rules of Practice and Procedure'' in 10 CFR part 2. Interested persons should consult a current copy of 10 CFR 2.309, which is available at the NRC's PDR, located at One White Flint North, Room O1–F21, 11555 Rockville Pike (first floor), Rockville, Maryland 20852. The NRC's regulations are accessible electronically from the NRC Library on the NRC's Web site at *http://www.nrc.gov/reading-rm/doc-collections/cfr/*. If a petition is filed within 60 days, the Commission or a presiding officer designated by the Commission or by the Chief Administrative Judge of the Atomic Safety and Licensing Board Panel, will rule on the petition; and the Secretary or the Chief Administrative Judge of the Atomic Safety and Licensing Board Panel will issue a notice of a hearing or an appropriate order.

As required by 10 CFR 2.309, a petition shall set forth with particularity the interest of the petitioner in the proceeding, and how that interest may be affected by the results of the proceeding. The petition should specifically explain the reasons why intervention should be permitted with particular reference to the following general requirements: (1) The name, address, and telephone number of the petitioner; (2) the nature of the petitioner's right under the Act to be made a party to the proceeding; (3) the nature and extent of the petitioner's property, financial, or other interest in the proceeding; and (4) the possible effect of any decision or order which may be entered in the proceeding on the petitioner's interest. The petition must also set forth the specific contentions which the petitioner seeks to have litigated at the proceeding.

Each contention must consist of a specific statement of the issue of law or fact to be raised or controverted. In addition, the petitioner shall provide a

brief explanation of the bases for the contention and a concise statement of the alleged facts or expert opinion which support the contention and on which the petitioner intends to rely in proving the contention at the hearing. The petitioner must also provide references to those specific sources and documents of which the petitioner is aware and on which the petitioner intends to rely to establish those facts or expert opinion to support its position on the issue. The petition must include sufficient information to show that a genuine dispute exists with the applicant on a material issue of law or fact. Contentions shall be limited to matters within the scope of the proceeding. The contention must be one which, if proven, would entitle the petitioner to relief. A petitioner who fails to satisfy these requirements with respect to at least one contention will not be permitted to participate as a party.

Those permitted to intervene become parties to the proceeding, subject to any limitations in the order granting leave to intervene, and have the opportunity to participate fully in the conduct of the hearing with respect to resolution of that person's admitted contentions consistent with the NRC's regulations, policies, and procedures.

Petitions for leave to intervene must be filed no later than 60 days from the date of publication of this notice. Requests for hearing, petitions for leave to intervene, and motions for leave to file new or amended contentions that are filed after the 60-day deadline will not be entertained absent a determination by the presiding officer that the filing demonstrates good cause by satisfying the three factors in 10 CFR 2.309(c)(1)(i) through (iii).

If a hearing is requested, and the Commission has not made a final determination on the issue of no significant hazards consideration, the Commission will make a final determination on the issue of no significant hazards consideration. The final determination will serve to decide when the hearing is held. If the final determination is that the amendment request involves no significant hazards consideration, the Commission may issue the amendment and make it immediately effective, notwithstanding the request for a hearing. Any hearing held would take place after issuance of the amendment. If the final determination is that the amendment request involves a significant hazards consideration, then any hearing held would take place before the issuance of any amendment unless the Commission finds an imminent danger to the health or safety of the public, in which case it will issue an appropriate order or rule under 10 CFR part 2.

A State, local governmental body, Federally-recognized Indian Tribe, or agency thereof, may submit a petition to the Commission to participate as a party under 10 CFR 2.309(h)(1).

The petition should state the nature and extent of the petitioner's interest in the proceeding. The petition should be submitted to the Commission by February 6, 2017. The petition must be filed in accordance with the filing instructions in the ''Electronic Submissions (E-Filing)'' section of this document, and should meet the requirements for petitions set forth in this section, except that under 10 CFR 2.309(h)(2) a State, local governmental body, or Federally-recognized Indian Tribe, or agency thereof does not need to address the standing requirements in 10 CFR 2.309(d) if the facility is located within its boundaries. A State, local governmental body, Federally-recognized Indian Tribe, or agency thereof may also have the opportunity to participate under 10 CFR 2.315(c).

If a hearing is granted, any person who does not wish, or is not qualified, to become a party to the proceeding may, in the discretion of the presiding officer, be permitted to make a limited appearance pursuant to the provisions of 10 CFR 2.315(a). A person making a limited appearance may make an oral or written statement of position on the issues, but may not otherwise participate in the proceeding. A limited appearance may be made at any session of the hearing or at any prehearing conference, subject to the limits and conditions as may be imposed by the presiding officer. Details regarding the opportunity to make a limited appearance will be provided by the presiding officer if such sessions are scheduled.

B. Electronic Submissions (E-Filing)

All documents filed in NRC adjudicatory proceedings, including a request for hearing, a petition for leave to intervene, any motion or other document filed in the proceeding prior to the submission of a request for hearing or petition to intervene (hereinafter ''petition''), and documents filed by interested governmental entities participating under 10 CFR 2.315(c), must be filed in accordance with the NRC's E-Filing rule (72 FR 49139; August 28, 2007, as amended at 77 FR 46562, August 3, 2012). The E-Filing process requires participants to submit and serve all adjudicatory documents over the internet, or in some cases to mail copies on electronic storage media. Participants may not submit paper copies of their filings unless they seek an exemption in accordance with the procedures described below.

To comply with the procedural requirements of E-Filing, at least 10 days prior to the filing deadline, the participant should contact the Office of the Secretary by email at *hearing.docket@nrc.gov,* or by telephone at 301–415–1677, to request (1) a digital identification (ID) certificate, which allows the participant (or its counsel or representative) to digitally sign documents and access the E-Submittal server for any proceeding in which it is participating; and (2) advise the Secretary that the participant will be submitting a petition (even in instances in which the participant, or its counsel or representative, already holds an NRC-issued digital ID certificate). Based upon this information, the Secretary will establish an electronic docket for the hearing in this proceeding if the Secretary has not already established an electronic docket.

Information about applying for a digital ID certificate is available on the NRC's public Web site at *http://www.nrc.gov/site-help/e-submittals/getting-started.html.* System requirements for accessing the E-Submittal server are available on the NRC's public Web site at *http://www.nrc.gov/site-help/e-submittals/adjudicatory-sub.html.* Participants may attempt to use other software not listed on the Web site, but should note that the NRC's E-Filing system does not support unlisted software, and the NRC Electronic Filing Help Desk will not be able to offer assistance in using unlisted software.

Once a participant has obtained a digital ID certificate and a docket has been created, the participant can then submit a petition. Submissions should be in Portable Document Format (PDF). Additional guidance on PDF submissions is available on the NRC's public Web site at *http://www.nrc.gov/site-help/electronic-sub-ref-mat.html.* A filing is considered complete at the time the documents are submitted through the NRC's E-Filing system. To be timely, an electronic filing must be submitted to the E-Filing system no later than 11:59 p.m. Eastern Time on the due date. Upon receipt of a transmission, the E-Filing system time-stamps the document and sends the submitter an email notice confirming receipt of the document. The E-Filing system also distributes an email notice that provides access to the document to the NRC's Office of the General Counsel and any others who have advised the Office of the Secretary that they wish to participate in the

proceeding, so that the filer need not serve the documents on those participants separately. Therefore, applicants and other participants (or their counsel or representative) must apply for and receive a digital ID certificate before a hearing petition to intervene is filed so that they can obtain access to the document via the E-Filing system.

A person filing electronically using the NRC's adjudicatory E-Filing system may seek assistance by contacting the NRC Electronic Filing Help Desk through the ''Contact Us'' link located on the NRC's public Web site at *http://www.nrc.gov/site-help/e-submittals.html,* by email to *MSHD.Resource@nrc.gov,* or by a toll-free call at 1–866–672–7640. The NRC Electronic Filing Help Desk is available between 9 a.m. and 7 p.m., Eastern Time, Monday through Friday, excluding government holidays.

Participants who believe that they have a good cause for not submitting documents electronically must file an exemption request, in accordance with 10 CFR 2.302(g), with their initial paper filing stating why there is good cause for not filing electronically and requesting authorization to continue to submit documents in paper format. Such filings must be submitted by: (1) First class mail addressed to the Office of the Secretary of the Commission, U.S. Nuclear Regulatory Commission, Washington, DC 20555–0001, Attention: Rulemaking and Adjudications Staff; or (2) courier, express mail, or expedited delivery service to the Office of the Secretary, 11555 Rockville Pike, Rockville, Maryland 20852, Attention: Rulemaking and Adjudications Staff. Participants filing a document in this manner are responsible for serving the document on all other participants. Filing is considered complete by first-class mail as of the time of deposit in the mail, or by courier, express mail, or expedited delivery service upon depositing the document with the provider of the service. A presiding officer, having granted an exemption request from using E-Filing, may require a participant or party to use E-Filing if the presiding officer subsequently determines that the reason for granting the exemption from use of E-Filing no longer exists.

Documents submitted in adjudicatory proceedings will appear in the NRC's electronic hearing docket which is available to the public at *http://ehd1.nrc.gov/ehd/,* unless excluded pursuant to an order of the Commission, or the presiding officer. Participants are requested not to include personal privacy information, such as social security numbers, home addresses, or home phone numbers in their filings, unless an NRC regulation or other law requires submission of such information. However, in some instances, a petition will require including information on local residence in order to demonstrate a proximity assertion of interest in the proceeding. With respect to copyrighted works, except for limited excerpts that serve the purpose of the adjudicatory filings and would constitute a Fair Use application, participants are requested not to include copyrighted materials in their submission.

The Commission will issue a notice or order granting or denying a hearing request or intervention petition, designating the issues for any hearing that will be held and designating the Presiding Officer. A notice granting a hearing will be published in the **Federal Register** and served on the parties to the hearing.

Exelon Generation Company, LLC, Docket Nos. 50–373 and 50–374, LaSalle County Station (LSCS), Units 1 and 2, LaSalle County, Illinois

Date of amendment request: September 30, 2016, as supplemented by letter dated November 8, 2016.

Description of amendment request: The amendments revised the LSCS licensing basis related to Alternate Source Term Analysis in the Updated Final Safety Analysis Report to allow operation with and movement of irradiated Atrium-10 fuel bundles containing part length rods that have been in operation above 62,000 megawatt days per metric ton of uranium (MWD/MTU), which is the current rod average burnup limit specified in Footnote 11 of NRC Regulatory Guide (RG) 1.183, ''Alternative Radiological Source Terms for Evaluating Design Basis Accidents at Nuclear Power Reactors,'' to which LSCS is committed. In addition, the change allows use of the release fractions listed in Table 1 of RG 1.183 for these Atrium-10 partial length rods that are currently in the LSCA, Unit 2, Cycle 16, reactor core for the remainder of the current operating cycle.

Date of issuance: November 18, 2016.

Effective date: As of the date of issuance and shall be implemented within 10 days from the date of issuance.

Amendment Nos.: Unit 1—221; Unit 2—207. A publicly-available version is in ADAMS under Accession No. ML16320A182; documents related to these amendments are listed in the Safety Evaluation enclosed with the amendments.

Facility Operating License Nos. NPF–11 and NPF–18: The amendments revised the licensing basis related to Alternate Source Term in the Updated Final Safety Analysis Report.

Public comments requested as to proposed no significant hazards consideration (NSHC): Yes. Public notice of the proposed amendment was published in *The Ottawa Times* on November 15 and November 16, 2016. The notice provided an opportunity to submit comments on the Commission's proposed NSHC determination. No comments have been received.

The Commission's related evaluation of the amendment, finding of exigent circumstances, state consultation, and final NSHC determination are contained in a safety evaluation dated November 18, 2016.

Attorney for licensee: Bradley J. Fewell, Associate General Counsel, Exelon Nuclear, 4300 Winfield Road, Warrenville, IL 60555.

NRC Acting Branch Chief: Edward G. Miller.

Dated at Rockville, Maryland, this 23rd day of November 2016.

For the Nuclear Regulatory Commission.

Anne T. Boland,

Director, Division of Operating Reactor Licensing, Office of Nuclear Reactor Regulation.

[FR Doc. 2016–28990 Filed 12–5–16; 8:45 am]

BILLING CODE 7590–01–P

NUCLEAR REGULATORY COMMISSION

[NRC–2016–0122]

Program-Specific Guidance About Medical Use Licenses

AGENCY: Nuclear Regulatory Commission.

ACTION: Draft NUREG; request for comments.

SUMMARY: The U.S. Nuclear Regulatory Commission (NRC) is revising its licensing guidance for licenses authorizing medical use of byproduct material. The NRC is requesting public comment on draft NUREG–1556, Volume 9, Revision 3, ''Consolidated Guidance About Materials Licenses: Program-Specific Guidance About Medical Use Licenses.'' The document has been updated from the previous revision to include information on safety culture, security of radioactive materials, protection of sensitive information, and changes in regulatory policies and practices. This document is intended for use by applicants, licensees, and the NRC staff.

DATES: Submit comments by February 6, 2017. Comments received after this date will be considered if it is practical to do so, but the NRC is only able to assure consideration of comments received on or before this date.

ADDRESSES: You may submit comment by any of the following methods (unless this document describes a different method for submitting comments on a specific subject):

• *Federal Rulemaking Web site:* Go to *http://www.regulations.gov* and search for Docket ID NRC–2016–0122. Address questions about NRC dockets to Carol Gallagher; telephone: 301–415–3463; email: *Carol.Gallagher@nrc.gov.* For technical questions, contact the individual listed in the **FOR FURTHER INFORMATION CONTACT** section of this document.

• *Mail comments to:* Cindy Bladey, Office of Administration, Mail Stop: OWFN–12–H8, U.S. Nuclear Regulatory Commission, Washington, DC 20555–0001.

For additional direction on accessing information and submitting comments, see ''Obtaining Information and Submitting Comments'' in the **SUPPLEMENTARY INFORMATION** section of this document.

FOR FURTHER INFORMATION CONTACT: Katie Tapp, Office of Nuclear Material Safety and Safeguards; U.S. Nuclear Regulatory Commission, Washington, DC 20555–0001; telephone: 301–415–0236; email: *Katherine.Tapp@nrc.gov.*

SUPPLEMENTARY INFORMATION:

I. Obtaining Information and Submitting Comments

A. Obtaining Information

Please refer to Docket ID NRC–2016–0122 when contacting the NRC about the availability of information regarding this document. You may obtain publicly-available information related to this action by the following methods:

• *Federal Rulemaking Web site:* Go to *http://www.regulations.gov* and search for Docket ID NRC–2016–0122.

• *NRC's Agencywide Documents Access and Management System (ADAMS):* You may obtain publicly-available documents online in the ADAMS Public Documents collection at *http://www.nrc.gov/reading-rm/adams.html.* To begin the search, select ''ADAMS Public Documents'' and then select ''*Begin Web-based ADAMS Search.*'' For problems with ADAMS, please contact the NRC's Public Document Room (PDR) reference staff at 1–800–397–4209, 301–415–4737, or by email to *pdr.resource@nrc.gov.* The draft NUREG–1556, Volume 9, Revision 3, is available in ADAMS under Accession No. ML16328A214.

• *NRC's PDR:* You may examine and purchase copies of public documents at the NRC's PDR, Room O1–F21, One White Flint North, 11555 Rockville Pike, Rockville, Maryland 20852.

The draft NUREG–1556, Volume 9, Revision 3, is also available on the NRC's public Web site on the: (1) ''Consolidated Guidance About Materials Licenses (NUREG–1556)'' page at *http://www.nrc.gov/reading-rm/doc-collections/nuregs/staff/sr1556/;* and the (2) ''Draft NUREG-Series Publications for Comment'' page at *http://www.nrc.gov/public-involve/doc-comment.html#nuregs.*

B. Submitting Comments

Please include Docket ID NRC–2016–0122 in the subject line of your comment submission, in order to ensure that the NRC is able to make your comment submission available to the public in this docket.

The NRC cautions you not to include identifying or contact information that you do not want publicly disclosed in your comment submission. The NRC will post all comment submissions at *http://www.regulations.gov* as well as enter the comment submissions into ADAMS, and the NRC does not routinely edit comment submissions to remove identifying or contact information.

If you are requesting or aggregating comments from other persons for submission to the NRC, then you should inform those persons not to include identifying or contact information that they do not want to be publicly disclosed in their comment submission. Your request should state that the NRC does not routinely edit comment submissions to remove such information before making the comment submissions available to the public or entering the comment submissions into ADAMS.

II. Further Information

The NUREG provides guidance to existing medical use of byproduct material licensees and to an applicant that are preparing a medical use of byproduct material license application. The NUREG also provides the NRC with criteria for evaluating a license application. The purpose of this notice is to provide the public with an opportunity to review and provide comments on draft NUREG–1556, Volume 9, Revision 3, ''Consolidated Guidance About Materials Licenses: Program-Specific Guidance About Medical Use Licenses.'' These comments will be considered in the final version or subsequent revisions.

This draft of NUREG–1556, Volume 9, Revision 3 does not include any revisions associated with the proposed rule ''Medical Use of Byproduct Material-Medical Event Definitions, Training and Experience, and Clarifying Amendments.'' This proposed rule amends requirements in parts 30, 32, and 35 of title 10 of the *Code of Federal Regulations* for the following:

• Reporting and notification of medical event for permanent implant brachytherapy; training and experience for authorized users, medical physicists, Radiation Safety Officers and nuclear pharmacists;

• measuring molybdenum contamination and reporting of failed technetium and rubidium generators;

• allowing Associate Radiation Safety Officers to be named on a medical use license; and,

• clarifying other revisions to the regulations.

This draft of NUREG–1556, Volume 9, Revision 3 does not include any guidance for the proposed rule revisions as that rule is not final at this time.

The proposed rule and proposed changes to NUREG–1556, Volume 9, associated with the proposed rule were published for public comment in the **Federal Register** (79 FR 42409, 79 FR 42224) on July 21, 2014. Comments received on those changes are being considered by the NRC staff separately. If the proposed rule becomes final, the proposed revisions to NUREG–1556, Volume 9 addressing the implementation of the proposed rule will be incorporated into this NUREG–1556, Volume 9, Revision 3 before its final publication.

Dated at Rockville, Maryland, this 30th day of November, 2016.

For the U.S. Nuclear Regulatory Commission.

Daniel S. Collins,

Director, Division of Material Safety, State, Tribal, and Rulemaking Programs, Office of Nuclear Material Safety and Safeguards.

[FR Doc. 2016–29214 Filed 12–5–16; 8:45 am]

BILLING CODE 7590–01–P

NUCLEAR REGULATORY COMMISSION

[NRC–2016–0001]

Sunshine Act Meeting Notice

DATES: December 5, 12, 19, 26, 2016, January 2, 9, 2017.

PLACE: Commissioners' Conference Room, 11555 Rockville Pike, Rockville, Maryland.

STATUS: Public and Closed.

Week of December 5, 2016

There are no meetings scheduled for the week of December 5, 2016.

Week of December 12, 2016—Tentative

Thursday, December 15, 2016

9:30 a.m. Briefing on Equal Employment Opportunity, Affirmative Employment, and Small Business (Public Meeting); (Contact: Larniece McKoy Moore: 301–415–1942)

This meeting will be webcast live at the Web address—*http://www.nrc.gov/.*

Week of December 19, 2016—Tentative

There are no meetings scheduled for the week of December 19, 2016.

Week of December 26, 2016—Tentative

There are no meetings scheduled for the week of December 26, 2016.

Week of January 2, 2017—Tentative

There are no meetings scheduled for the week of January 2, 2017.

Week of January 9, 2017—Tentative

Friday, January 13, 2017

9:00 a.m. Briefing on Operator Licensing Program (Public Meeting); (Contact: Nancy Salgado: 301–415–1324)

This meeting will be webcast live at the Web address—*http://www.nrc.gov/.*

* * * * *

The schedule for Commission meetings is subject to change on short notice. For more information or to verify the status of meetings, contact Denise McGovern at 301–415–0981 or via email at *Denise.McGovern@nrc.gov.*

* * * * *

The NRC Commission Meeting Schedule can be found on the Internet at: *http://www.nrc.gov/public-involve/public-meetings/schedule.html.*

* * * * *

The NRC provides reasonable accommodation to individuals with disabilities where appropriate. If you need a reasonable accommodation to participate in these public meetings, or need this meeting notice or the transcript or other information from the public meetings in another format (*e.g.*, braille, large print), please notify Kimberly Meyer, NRC Disability Program Manager, at 301–287–0739, by videophone at 240–428–3217, or by email at *Kimberly.Meyer-Chambers@nrc.gov.* Determinations on requests for reasonable accommodation will be made on a case-by-case basis.

* * * * *

Members of the public may request to receive this information electronically. If you would like to be added to the distribution, please contact the Nuclear Regulatory Commission, Office of the Secretary, Washington, DC 20555 (301–415–1969), or email *Brenda.Akstulewicz@nrc.gov* or *Patricia.Jimenez@nrc.gov.*

Dated: December 1, 2016.

Denise L. McGovern,

Policy Coordinator, Office of the Secretary.

[FR Doc. 2016–29281 Filed 12–2–16; 11:15 am]

BILLING CODE 7590–01–P

POSTAL REGULATORY COMMISSION

[Docket Nos. CP2017–47; CP2017–48; CP2017–49; and CP2017–50]

New Postal Products

AGENCY: Postal Regulatory Commission.

ACTION: Notice.

SUMMARY: The Commission is noticing recent Postal Service filings for the Commission's consideration concerning negotiated service agreements. This notice informs the public of the filing, invites public comment, and takes other administrative steps.

DATES: *Comments are due:* December 8, 2016 (Comment due date applies to all Docket Nos. listed above)

ADDRESSES: Submit comments electronically via the Commission's Filing Online system at *http://www.prc.gov.* Those who cannot submit comments electronically should contact the person identified in the **FOR FURTHER INFORMATION CONTACT** section by telephone for advice on filing alternatives.

FOR FURTHER INFORMATION CONTACT: David A. Trissell, General Counsel, at 202–789–6820.

SUPPLEMENTARY INFORMATION:

Table of Contents

I. Introduction
II. Docketed Proceeding(s)

I. Introduction

The Commission gives notice that the Postal Service filed request(s) for the Commission to consider matters related to negotiated service agreement(s). The request(s) may propose the addition or removal of a negotiated service agreement from the market dominant or the competitive product list, or the modification of an existing product currently appearing on the market dominant or the competitive product list.

Section II identifies the docket number(s) associated with each Postal Service request, the title of each Postal Service request, the request's acceptance date, and the authority cited by the Postal Service for each request. For each request, the Commission appoints an officer of the Commission to represent the interests of the general public in the proceeding, pursuant to 39 U.S.C. 505 (Public Representative). Section II also establishes comment deadline(s) pertaining to each request.

The public portions of the Postal Service's request(s) can be accessed via the Commission's Web site (*http://www.prc.gov*). Non-public portions of the Postal Service's request(s), if any, can be accessed through compliance with the requirements of 39 CFR 3007.40.

The Commission invites comments on whether the Postal Service's request(s) in the captioned docket(s) are consistent with the policies of title 39. For request(s) that the Postal Service states concern market dominant product(s), applicable statutory and regulatory requirements include 39 U.S.C. 3622, 39 U.S.C. 3642, 39 CFR part 3010, and 39 CFR part 3020, subpart B. For request(s) that the Postal Service states concern competitive product(s), applicable statutory and regulatory requirements include 39 U.S.C. 3632, 39 U.S.C. 3633, 39 U.S.C. 3642, 39 CFR part 3015, and 39 CFR part 3020, subpart B. Comment deadline(s) for each request appear in section II.

II. Docketed Proceeding(s)

1. *Docket No(s).:* CP2017–47; *Filing Title:* Notice of United States Postal Service of Filing a Functionally Equivalent Global Expedited Package Services 3 Negotiated Service Agreement and Application for Non-Public Treatment of Materials Filed Under Seal; *Filing Acceptance Date:* November 30, 2016; *Filing Authority:* 39 CFR 3015.5; *Public Representative:* Kenneth R. Moeller; *Comments Due:* December 8, 2016.

2. *Docket No(s).:* CP2017–48; *Filing Title:* Notice of United States Postal Service of Filing a Functionally Equivalent Global Expedited Package Services 3 Negotiated Service Agreement and Application for Non-Public Treatment of Materials Filed Under Seal; *Filing Acceptance Date:* November 30, 2016; *Filing Authority:* 39 CFR 3015.5; *Public Representative:* Kenneth R. Moeller; *Comments Due:* December 8, 2016.

3. *Docket No(s).:* CP2017–49; *Filing Title:* Notice of United States Postal Service of Filing a Functionally Equivalent Global Expedited Package Services 3 Negotiated Service Agreement and Application for Non-

Public Treatment of Materials Filed Under Seal; *Filing Acceptance Date:* November 30, 2016; *Filing Authority:* 39 CFR 3015.5; *Public Representative:* Katalin K. Clendenin; *Comments Due:* December 8, 2016.

4. *Docket No(s).:* CP2017–50; *Filing Title:* Notice of United States Postal Service of Filing a Functionally Equivalent Global Expedited Package Services 5 Negotiated Service Agreement and Application for Non-Public Treatment of Materials Filed Under Seal; *Filing Acceptance Date:* November 30, 2016; *Filing Authority:* 39 CFR 3015.5; *Public Representative:* Katalin K. Clendenin; *Comments Due:* December 8, 2016.

This notice will be published in the **Federal Register**.

Stacy L. Ruble,

Secretary.

[FR Doc. 2016–29235 Filed 12–5–16; 8:45 am]

BILLING CODE 7710–FW–P

OFFICE OF SCIENCE AND TECHNOLOGY POLICY

National Science and Technology Council

Framework for a Federal Strategic Plan for Soil Science

ACTION: Notice of Request for Information.

SUMMARY: The Soil Science Interagency Working Group (SSIWG) was established under the National Science and Technology Council to develop a Framework for a Federal Strategic Plan for Soil Science. This Framework aims to establish Federal soil research priorities, ensure availability of tools and information for improved soil management and stewardship, deliver key information to land managers to help them implement soil conserving systems, and inform related policy development and coordination. The Framework identifies current gaps, needs, and opportunities in soil science, and proposes Federal research priorities for the future. The Framework will inform a more comprehensive Federal Strategic Plan that will provide recommendations for improving the coordination of soil science research, as well as the development, implementation, and evaluation of soil conservation and management practices among Federal agencies and between Federal agencies and non-Federal organizations, both domestic and international. This notice solicits public comments on the Framework. The Framework can be accessed at the following link: *https://www.whitehouse.gov/sites/default/files/microsites/ostp/SSIWG_Framework_December_2016.pdf.*

DATES: Comments must be received by January 10, 2017 to be considered.

ADDRESSES: You may submit comments by any of the following methods:

- *Email (preferred): science@ostp.eop.gov.* Include [*Framework—Soils*] in the subject line of the message.
- *Fax:* (202) 456–6027, Attn: Parker Liautaud.
- *Mail:* Attn: Parker Liautaud, Office of Science and Technology Policy, Eisenhower Executive Office Building, 1650 Pennsylvania Ave. NW., Washington, DC 20504.

Instructions: Response to this Request for Information (RFI) is voluntary. Responses exceeding 10 pages will not be considered. If responding to a question listed in the **SUPPLEMENTARY INFORMATION** section, please identify the question number(s) in your comment. Responses to this RFI may be posted without change online. The Office of Science and Technology Policy (OSTP) therefore requests that no business proprietary information, copyrighted information, or personally identifiable information be submitted in response to this RFI. Please note that the U.S. Government will not pay for response preparation, or for the use of any information contained in the response.

FOR FURTHER INFORMATION CONTACT: Parker Liautaud, (202) 881–7564, *pliautaud@ostp.eop.gov,* OSTP.

SUPPLEMENTARY INFORMATION: In preparing comments on the contents of the Framework, you may wish to consider the following questions:

(1) What research gaps currently exist in soil science and in soil-related questions within the earth and life sciences? Do Federal research programs adequately address these questions and support the necessary research to answer them? If no, where might there be needs for further Federal support?

(2) In general, does the Framework appropriately characterize the threats to U.S. soil resources? Are there significant challenges to soils that have not been mentioned or addressed in the Framework? Are there aspects to the issues explored that have not been considered, which should be?

(3) Land Use and Land Cover Change (LULCC): Have the appropriate LULCC issues been discussed and listed? Are there other forms of LULCC that are important (as related to impacts on soils) and have not been considered?

(4) Land Management Practices: Does the Framework accurately characterize the types of practices that impact agricultural soils? Does the Framework neglect any relevant issues related to the effects of different land management practices on soil?

(5) Climate and Environmental Change: Does the Framework identify the most important research needs? Does it neglect to mention significant opportunities or needs?

(6) Under each ''Challenge and Opportunity'' subsection, the Framework defines needs and opportunities to address threats to U.S. soils within four broad categories: Research, Technology, Land Management, and Social Sciences. Do these four categories adequately characterize the appropriate needs and opportunities in the Challenge areas? Are there threats to soils that cannot be addressed through programs that fall into one of these four categories?

(7) Priorities for the Future

a. Do these priorities adequately reflect the science and technology needs for ensuring the long-term sustainable use of soils in the United States?

b. Do you believe the list of priorities is comprehensive, or does it neglect one or more important issues?

c. Are the recommendations achievable?

d. The process of developing the Framework into a comprehensive plan may involve adding specificity to the recommendations, as well as suggesting Federal mechanisms for fulfilling them. In what way should these recommendations be made more detailed to better protect soils in the future? What metrics, targets, and benchmarks should be used, and in which soil properties?

Stacy Murphy,

Operations Manager.

[FR Doc. 2016–29187 Filed 12–5–16; 8:45 am]

BILLING CODE 3270–F7–P

SECURITIES AND EXCHANGE COMMISSION

[Release No. 34–79431; File No. SR–Nasdaq–2016–120]

Self-Regulatory Organizations; The Nasdaq Stock Market LLC; Order Instituting Proceedings To Determine Whether To Approve or Disapprove a Proposed Rule Change To Amend Rules 7034 and 7051 To Establish the Third Party Connectivity Service

November 30, 2016.

I. Introduction

On August 16, 2016, the Nasdaq Stock Market LLC (''Nasdaq'' or ''Exchange'') filed with the Securities and Exchange

Commission (''Commission''), pursuant to Section 19(b)(1) [1] of the Securities Exchange Act of 1934 (''Act'') [2] and Rule 19b–4 thereunder,[3] a proposed rule change to establish the Third Party Connectivity Service under Rules 7034 and 7051. The proposed rule change was published for comment in the **Federal Register** on September 2, 2016.[4] The Commission received one comment letter regarding the proposal.[5] Nasdaq responded to the comment letter.[6] Subsequently, the Commission received three additional comment letters regarding the proposal: One from Bats responding to Nasdaq's Letter, another from Virtu Financial, and a third from SIFMA.[7] This order institutes proceedings under Section 19(b)(2)(B) of the Act [8] to determine whether to approve or disapprove the proposed rule change.

II. Description of the Proposed Rule Change

Proposed New Connectivity

As described in the Notice, the Exchange is proposing to amend Rules 7034 and 7051 to establish the Third Party Connectivity Service. Under the proposal, the Exchange would segregate connectivity to the Exchange and its proprietary data feeds from connectivity to third party services and data feeds, including SIP data feeds. The Third Party Connectivity Service will provide customers third party market data feeds, including SIP data, and other non-exchange services.[9] The Exchange is proposing to offer the Third Party Connectivity Service to co-location and non-co-location customers and will offer the service to customers in 10 Gb Ultra and 1 Gb Ultra hand-offs.[10] To receive the SIP feeds, customers must subscribe to the 10 Gb Ultra connectivity option under either Rule 7034(b) or 7051(b). The proposed 1 Gb Ultra Third Party Connectivity Service option under Rules 7034(b) and 7051(b) will only support data feeds from other exchanges and markets.[11] Customers seeking connectivity to the Exchange and its proprietary data feeds may continue to do so through existing connectivity options under Rules 7034(b) and Rule 7051(a).[12]

Proposed New Fees [13]

The Exchange is proposing to assess fees for the Third Party Connectivity Service under Rules 7034(b) and 7051(b), including a fee of $1,500 for installation of either a 10 Gb Ultra or 1 Gb Ultra Third Party Services co-location or direct connectivity subscription and an ongoing monthly fee of $5,000 for 10 Gb Ultra connection and $2,000 for a 1 Gb Ultra connection.

III. Comment Letters and Nasdaq's Response

The Commission received a total of four comments on the proposed rule change.[14] All of the commenters object to the proposal. The Commission also received a response to the Bats Letter from Nasdaq.[15]

In its comment letter, Bats stated that the proposed rule change constitutes a UTP access services fee for direct access to UTP data, and, as such, the fee should have been approved by the UTP Operating Committee.[16] SIFMA noted its agreement with BATS's position on this issue.[17] More specifically, Bats stated its belief that because Nasdaq is the sole provider of direct access to UTP Data, the proposal targets UTP Data recipients and extends the scope of the UTP system to include customer connectivity, because firms desiring direct access to UTP Data would be required to subscribe to and pay for the proposed Third Party Connectivity Service.[18] Bats also stated its views that the proposal is anti-competitive, in that it benefits Nasdaq's proprietary data products over UTP data, and is technically unnecessary.[19] Virtu Financial and SIFMA also questioned whether the proposal is technically necessary.[20]

Nasdaq responded to the Bats Letter, stating that Nasdaq has controlled the network and network connectivity without input from the UTP Operating Committee for over 25 years,[21] and that neither the UTP Plan nor the processor agreement grants the UTP Operating Committee authority over the network or network connectivity associated with SIP Data.[22]

Nasdaq also stated that SIP Data can be obtained from multiple extranet providers that compete with Nasdaq's data distribution services.[23] Nasdaq further stated that extranet providers are not at a competitive disadvantage because extranet providers and Nasdaq receive SIP Data via the same switches, and therefore clients that receive SIP Data via direct connections do not have an advantage with respect to location or speed.[24] Nasdaq also stated that the proposal does not target UTP data recipients because UTP SIP Data is combined with and carried on the same network as data from other sources.[25] Nasdaq argued that it ''is proposing to charge firms less for access to SIP Data than it will charge for access to Nasdaq Data'' because the ''proposed monthly fees for direct connections to the Third Party Data are $2000 for 1G connections and $5000 for 10G connections, where the current fees for direct connections to Nasdaq Data are $2500 and $7500 for the same services.'' [26]

With respect to technical necessity, Nasdaq stated that it has ''done substantial analysis to support the recommendation, and it believes the recommendation is consistent with its limited experience with the new Processor.'' [27] Nasdaq further stated that the UTP Operating Committee has ''input into the bandwidth

[1] 15 U.S.C.78s(b)(1).

[2] 15 U.S.C. 78a.

[3] 17 CFR 240.19b–4.

[4] *See* Securities Exchange Act Release No. 78713 (August 29, 2016), 81 FR 60768 (''Notice'').

[5] *See* letter from Eric Swanson, Esq., General Counsel, Bats Global Markets, Inc., dated September 12, 2016 (''Bats Letter'') to Brent J. Fields, Secretary, Securities and Exchange Commission.

[6] *See* letter from Jeffrey S. Davis, Vice President and General Counsel, NASDAQ Stock Market LLC, to Brent J. Fields, Secretary, Commission, dated October 4, 2016 (''Nasdaq Letter'').

[7] *See* letters from Eric Swanson, dated October 12, 2016 (''Bats Response''), Douglas A. Cifu, Chief Executive Officer, Virtu Financial, dated October 6, 2016 (''Virtu Letter''), and Melissa McGregor, Managing Director and Associate General Counsel, Securities Industry and Financial Markets Association, dated November 23, 2016 (''SIFMA Letter''), to Brent J. Fields, Secretary, Commission.

[8] 15 U.S.C. 78s(b)(2)(B).

[9] *See* Notice, 81 FR at 60769 n.10.

[10] *See* Notice, 81 FR at 60769 n.12.

[11] *See* Notice, 81 FR at 60769 n.10.

[12] *See* Notice, 81 FR at 60769 n.13.

[13] In the notice, the Exchange also states that it will offer services currently available to Direct Connectivity subscribers under Rule 7051 to subscribers to the Third Party Connectivity Service.

[14] *See supra* notes 5 and 7.

[15] *See supra* note 6.

[16] *See* Bats Letter at 1–2. The Joint Self-Regulatory Organization Plan Governing the Collection, Consolidation and Dissemination of Quotation and Transaction Information for Nasdaq-Listed Securities Traded on Exchanges on an Unlisted Trading Privileges Basis (''The UTP Plan'') is administered by its participants through an operating committee (''UTP Operating Committee'') which is composed of one representative designated by each participant of the plan. *See, e.g.,* Sections IV.A., B.3, and IV.C.2 of the UTP Plan, and Securities Exchange Act Release No.55647 (April 19, 2007), 72 FR 20891 (April 26, 2007).

[17] *See* SIFMA Letter at 2.

[18] *See* Bats Letter at 1–2.

[19] *See* Bats Letter at 1, 3–5.

[20] *See* Virtu Letter at 1–2 and SIFMA Letter at 2–3.

[21] *See* Nasdaq Letter at 2–4.

[22] *Id.*

[23] *See* Nasdaq Letter at 4.

[24] *See* Nasdaq Letter at 4–5.

[25] *See* Nasdaq Letter at 3.

[26] *See* Nasdaq Letter at 5.

[27] *See* Nasdaq Letter at 5. In its letter, Nasdaq also states that ''[d]uring a one month period (23 trading days) this summer, Nasdaq observed the new UTP Trade Data binary feed exceeding a 1G capacity for a 1 microsecond timeframe in 18 of the trading days. If you add the new UTP Quote Data binary feed to that same connection, the combined feeds exceed 1G capacity for 1 microsecond timeframe in 23 trading days.'' *See id.*

recommendation'' and can act to lower it further.[28]

In its response to Nasdaq, Bats stated its views that the Nasdaq Letter fails to: (i) Address Bats' assertions that the proposal is anti-competitive; (ii) explain why the proposed rule change is technically necessary; and (iii) show that the proposed rule change does not constitute an access services fee for UTP Data. Specifically, Bats stated that under the proposal, Nasdaq members who maintain direct connections to Nasdaq for trading and quoting purposes would continue to receive Nasdaq proprietary products at no additional cost, while those wishing to also obtain UTP Data would be required to purchase an additional connection via the proposed Third Party Connectivity Service, and pay a separate fee for that connection, thereby making access to UTP data materially more expensive.[29] Bats also stated that it is the access to UTP Data that is at issue, and not the coupling of UTP Data with other third party services, or the percentage of clients that also take another data product via a direct connection to Nasdaq.[30]

Bats also stated its view that Nasdaq SIP bandwidth recommendations are excessive, inconsistent with current peak UTP message traffic, and much higher than recommendations for Nasdaq's own proprietary data products.[31] SIFMA states that Nasdaq has not provided any ''reasonable justification for requiring member firms to use a 10Gb connection to receive SIP data.'' [32] Bats stated its belief that using a one microsecond burst to determine a bandwidth recommendation is misplaced, as the observed peak is not sustained over a full second.[33] Bats further stated its belief that the UTP Operating Committee has historically acquiesced in the current framework only because by ''leveraging a single physical connection to access to both Nasdaq and UTP services, firms can save on the total cost of access, which is a worthwhile benefit to direct UTP data recipients,'' [34] and that this ability to leverage existing connectivity was a factor in the selection of Nasdaq as SIP processor.[35]

In its letter, SIFMA agreed with issues raised by other commenters and asserted that the proposed rule change is not consistent with the statutory standards that govern fees.[36]

IV. Proceedings To Determine Whether To Approve or Disapprove SR–NASDAQ–2016–120 and Grounds for Disapproval Under Consideration

The Commission is instituting proceedings pursuant to Section 19(b)(2)(B) of the Act [37] to determine whether the proposed rule change should be approved or disapproved. Institution of proceedings is appropriate at this time in view of the legal and policy issues raised by the proposed rule change, as discussed. Institution of proceedings does not indicate that the Commission has reached any conclusions with respect to any of the issues involved. Rather, as described in greater detail below, the Commission seeks and encourages interested persons to provide additional comment on the proposed rule change.

Pursuant to Section 19(b)(2)(B) of the Act,[38] the Commission is providing notice of the grounds for disapproval under consideration. Specifically, the Commission is instituting proceedings to allow for additional analysis of, and input from commenters with respect to, the proposed rule change's consistency with Section 6(b)(4) of the Act, which requires that the rules of a national securities exchange ''provide for the equitable allocation of reasonable dues, fees, and other charges among its members and issuers and other persons using its facilities,'' [39] Section 6(b)(5) of the Act, which requires, among other things, that the rules of a national securities exchange be ''designed to perfect the operation of a free and open market and a national market system'' and ''protect investors and the public interest,'' and not be ''designed to permit unfair discrimination between customers, issuers, brokers, or dealers,'' [40] and Section 6(b)(8) of the Act, which requires that the rules of a national securities exchange ''not impose any burden on competition not necessary or appropriate in furtherance of the purposes of [the Act].'' [41]

V. Procedure: Request for Written Comments

The Commission requests that interested persons provide written submissions of their data, views, and arguments with respect to the concerns identified above, as well as any other concerns they may have with the proposed rule change. In particular, the Commission invites the written views of interested persons concerning whether the proposal is consistent with Sections 6(b)(4),[42] 6(b)(5),[43] 6(b)(8),[44] or any other provision of the Act, or the rules and regulations thereunder. Although there does not appear to be any issue relevant to approval or disapproval which would be facilitated by an oral presentation of data, views, and arguments, the Commission will consider, pursuant to Rule 19b–4 under the Act,[45] any request for an opportunity to make an oral presentation.[46] Interested persons are invited to submit written data, views, and arguments regarding whether the proposal should be approved or disapproved by December 27, 2016. Any person who wishes to file a rebuttal to any other person's submission must file that rebuttal by January 10, 2017.

In light of the issues raised by the proposed rule change, as discussed above, the Commission invites additional comment on the proposal, as the Commission continues its analysis of the proposed rule change's consistency with the Act, or the rules and regulations thereunder. More specifically, the Commission asks that any commenters address the sufficiency and merit of the Exchange's statements in support of the proposed rule change. In addition, the Commission seeks comment on the relative merits and advantages or disadvantages of obtaining UTP Data from sources other than directly from Nasdaq via the proposed Third Party Connectivity Service.

Comments may be submitted by any of the following methods:

[28] *See id.*

[29] *See* Bats Response at 1–2.

[30] *See* Bats Response at 4.

[31] *See* Bats Response at 2–3.

[32] *See* SIFMA Letter at 2.

[33] *See* Bats Response at 2–3.

[34] *See* Bats Response at 3–4.

[35] *Id.*

[36] *See* SIFMA Letter.

[37] 15 U.S.C. 78s(b)(2)(B). Section 19(b)(2)(B) of the Act also provides that proceedings to determine whether to disapprove a proposed rule change must be concluded within 180 days of the date of publication of notice of the filing of the proposed rule change. The time for conclusion of the proceedings may be extended for up to 60 days if the Commission finds good cause for such extension and publishes its reasons for so finding.

[38] 15 U.S.C. 78s(b)(2)(B).

[39] 15 U.S.C. 78f(b)(4).

[40] 15 U.S.C. 78f(b)(5).

[41] 15 U.S.C. 78f(b)(8).

[42] 15 U.S.C. 78f(b)(4).

[43] 15 U.S.C. 78f(b)(5).

[44] 15 U.S.C. 78f(b)(8).

[45] 17 CFR 240.19b–4.

[46] Section 19(b)(2) of the Act, as amended by the Securities Act Amendments of 1975, Public Law 94–29 (June 4, 1975), grants to the Commission flexibility to determine what type of proceeding—either oral or notice and opportunity for written comments—is appropriate for consideration of a particular proposal by a self-regulatory organization. *See* Securities Act Amendments of 1975, Senate Comm. on Banking, Housing & Urban Affairs, S. Rep. No. 75, 94th Cong., 1st Sess. 30 (1975).

Electronic Comments

- Use the Commission's Internet comment form (*http://www.sec.gov/rules/sro.shtml*); or
- Send an email to *rule-comments@sec.gov.* Please include File No. SR–Nasdaq–2016–120 on the subject line.

Paper Comments

- Send paper comments in triplicate to Secretary, Securities and Exchange Commission, 100 F Street NE., Washington, DC 20549–1090.

All submissions should refer to File No. SR–Nasdaq–2016–120. The file number should be included on the subject line if email is used. To help the Commission process and review your comments more efficiently, please use only one method. The Commission will post all comments on the Commission's Internet Web site (*http://www.sec.gov/rules/sro.shtml*). Copies of the submission, all subsequent amendments, all written statements with respect to the proposed rule change that are filed with the Commission, and all written communications relating to the proposed rule change between the Commission and any person, other than those that may be withheld from the public in accordance with the provisions of 5 U.S.C. 552, will be available for Web site viewing and printing in the Commission's Public Reference Room on official business days between the hours of 10:00 a.m. and 3:00 p.m. Copies of the filing also will be available for inspection and copying at the principal office of Nasdaq. All comments received will be posted without change; the Commission does not edit personal identifying information from submissions. You should submit only information that you wish to make available publicly.

All submissions should refer to File No. SR–Nasdaq–2016–120, and should be submitted by December 27, 2016. Rebuttal comments should be submitted by January 10, 2017.

For the Commission, by the Division of Trading and Markets, pursuant to delegated authority.[47]

Eduardo A. Aleman,

Assistant Secretary.

[FR Doc. 2016–29160 Filed 12–5–16; 8:45 am]

BILLING CODE 8011–01–P

[47] 17 CFR 200.30–3(a)(57).

SECURITIES AND EXCHANGE COMMISSION

[Release No. 34–79435; File No. SR–OCC–2016–014]

Self-Regulatory Organizations; The Options Clearing Corporation; Notice of Filing of Amendment No. 1 and Order Granting Accelerated Approval of a Proposed Rule Change, as Modified by Amendment No. 1, Related to Compliance With Section 871(m) of the Internal Revenue Code

November 30, 2016.

On October 18, 2016, The Options Clearing Corporation (''OCC'') filed with the Securities and Exchange Commission (''Commission'') the proposed rule change SR–OCC–2016–014 pursuant to Section 19(b)(1) of the Securities Exchange Act of 1934 (''Act'') [1] and Rule 19b–4 thereunder.[2] On November 1, 2016, the proposed rule change was published for comment in the **Federal Register**.[3] On November 28, 2016, OCC filed Amendment No. 1 to the proposal.[4] The Commission did not receive any comments on the proposed rule change. The Commission is publishing this notice to solicit comment on Amendment No. 1 from interested persons and is approving the proposed rule change, as modified by Amendment No. 1, on an accelerated basis.

I. Description of the Proposed Rule Change

The following is a description of the proposed rule change as provided by OCC.[5] All capitalized terms not defined herein have the same meaning as set forth in OCC's By-Laws and Rules.[6]

A. Background

OCC is proposing to modify its By-Laws and Rules to address the application of I.R.C. Section 871(m) (''Section 871(m)'') [7] to listed options transactions commencing on January 1, 2017. The proposed modifications are designed to ensure that OCC will not be liable for U.S. withholding tax with respect to certain options transactions entered into by OCC's Clearing Members that are treated as non-U.S. persons for federal income tax purposes.

Section 871(m), which was enacted in 2010, imposes a 30% withholding tax on ''dividend equivalent'' payments that are made or deemed to be made to non-U.S. persons with respect to certain derivatives (such as total return swaps) that reference equity of a U.S. issuer. In enacting Section 871(m), Congress was attempting to address the ability of foreign persons to obtain the economics of owning dividend-paying stock through a derivative while avoiding the withholding tax that would apply to dividends paid on the stock if the foreign person owned the stock directly.[8]

In September 2015, the Treasury Department adopted final regulations (the ''Final Section 871(m) Regulations'') [9] based on a proposal issued in December 2013 expanding the types of derivatives to which Section 871(m) applies to include certain listed options transactions with an effective date of January 1, 2017. While actual dividends paid to foreign owners of U.S. equities have been subject to withholding tax for over 80 years, transactions by foreign persons in listed options referencing U.S. equities have not previously given rise to withholding tax. The application of Section 871(m) to listed options, as provided in the Final Section 871(m) Regulations, thus introduces new tax obligations and associated risks for OCC and its Clearing Members.

Under the Final Section 871(m) Regulations, any equity option entered into by a non-U.S. person with an initial delta of .8 or above is considered a ''Section 871(m) Transaction'' and can potentially give rise to a dividend equivalent subject to withholding tax.[10]

[1] 15 U.S.C. 78s(b)(1).

[2] 17 CFR 240.19b–4.

[3] Securities Exchange Act Release No. 79172 (Oct. 27, 2016), 81 FR 75867 (Nov. 1, 2016) (SR–OCC–2016–014) (''Notice'').

[4] In Amendment No. 1, OCC amended the proposal by adjusting and clarifying the date by which an affected Clearing Member would need to demonstrate compliance with the proposed rule change, to allow additional time for the Internal Revenue Service (''IRS'') to finalize the form necessary to demonstrate such compliance. Whereas the original filing defined the ''Section 871(m) Implementation Date'' to mean ''December 1, 2016, or, if later, the date that is 30 days before the Section 871(m) Effective Date'', Amendment No. 1 defines ''Section 871(m) Implementation Date'' to mean ''such date on or after December 1, 2016 as [OCC] may designate in an Information Memo issued to its Clearing Members.''

[5] The proposed amendments and OCC's By-Laws and Rules can be found on OCC's public Web site: *http://optionsclearing.com/about/publications/bylaws.jsp.*

[6] *Id.*

[7] 26 U.S.C. 871(m).

[8] *See* 26 U.S.C. 871(a)(1)(A) (30% tax on dividends paid to non-resident aliens).

[9] *See* T.D. 9734, 80 FR 56866 (Sept. 18, 2015).

[10] Under the regulations, ''delta'' refers to the ratio of the change in the fair market value of an option to a small change in the fair market value of the number of shares of the underlying security referenced by the option. *See* 26 CFR 1.871–15(g)(1). Individual options entered into ''in connection with each other'' must generally be combined and tested against the .8 delta threshold on a combined basis (the ''Combination Rule''). *See* 26 CFR 1.871–15(n). For example, if a non-U.S. person buys a call option and writes a put option on the same stock, and the options are entered into

A dividend equivalent is deemed to arise if a dividend is paid on the underlying stock while such an option is outstanding even though no corresponding payment is made on the option. A complex set of rules and exceptions in the Final Section 871(m) Regulations must be followed in order for the withholding agent (as defined in 26 CFR 1.1441–7) to determine if the withholding tax in fact applies, and, if so, the amount of the dividend equivalent subject to withholding tax.

Two separate but overlapping U.S. withholding tax regimes will apply to dividend equivalents on listed options that are Section 871(m) Transactions. The first regime, sometimes referred to as ''Chapter 3 Withholding,'' is the basic U.S. income tax withholding regime under Chapter 3 subtitle A of the Internal Revenue Code (''Chapter 3''), which has existed for many years.[11] The second regime, known as ''FATCA,''[12] was enacted in 2010 and, subject to transition rules, first applied to withholdable payments (such as dividends and interest) made after June 30, 2014. The Treasury Department has issued extensive regulations under FATCA (the ''FATCA Regulations'').[13]

The two withholding tax regimes serve very different purposes. Chapter 3 Withholding requires a withholding agent to withhold 30% of a withholdable payment and remit it to the Internal Revenue Service (''IRS'').[14] The withholding tax is the mechanism by which the non-U.S. person receiving the payment satisfies its tax liability to the United States.

FATCA, on the other hand, was enacted with the purpose of curbing tax evasion by U.S. citizens and residents through the use of offshore bank accounts. FATCA imposes a 30% withholding tax (''FATCA Withholding'') on U.S.-source dividends and other withholdable payments (including dividend equivalents)[15] made by a U.S. withholding agent to a foreign financial institution (''FFI''), such as a bank or brokerage firm, unless the financial institution agrees to provide information to the IRS about its U.S. account holders. The purpose of FATCA Withholding is thus to force FFIs to provide the required information about U.S. account holders to the IRS. FFIs that enter into the required agreement with the IRS are referred to as ''Participating FFIs,'' and those that do not are referred to as ''Nonparticipating FFIs.'' The 30% FATCA Withholding applies to withholdable payments made to a Nonparticipating FFI whether the Nonparticipating FFI is the beneficial owner of the payment or acting as a broker, custodian or other intermediary with respect to the payment. To the extent that withholdable payments are made to a Nonparticipating FFI in any capacity, a U.S. withholding agent, such as OCC or its U.S. Clearing Members, transmitting these payments to the Nonparticipating FFI will be liable to the IRS for any amounts of FATCA Withholding that the U.S. withholding agent should, but does not, withhold and remit to the IRS.

The Treasury Department has provided alternative means of complying with FATCA for FFIs that are resident in foreign jurisdictions that enter into an intergovernmental agreement (''IGA'') with the United States (each such foreign jurisdiction being referred to as a ''FATCA Partner''). An FFI resident in a FATCA Partner jurisdiction must either transmit the information required by FATCA to its local tax authority, which in turn would transmit the information to the IRS pursuant to a tax treaty or information exchange agreement (referred to as a ''Model 1 IGA''), or the FFI must be authorized or required by FATCA Partner law to enter into an FFI agreement and to transmit FATCA reporting directly to the IRS (referred to as a ''Model 2 IGA''). Under both IGA models, payments to such FFIs would not be subject to FATCA Withholding so long as the FFI complies with the FATCA Partner's laws as mandated in the IGA. OCC currently has eight non-U.S. Clearing Members, all of which are Canadian firms. Canada entered into a Model 1 IGA with the United States on February 5, 2014, as a result of which OCC's Canadian Clearing Members that comply with the Canadian laws mandated in such Model 1 IGA are ''Reporting Model 1 FFIs'' and are exempt from FATCA Withholding.

Because OCC does not make payments of U.S.-source interest and dividends to its Clearing Members, OCC's transactions with its Clearing Members have not to date given rise to payments subject to Chapter 3 Withholding or to FATCA Withholding. Both Chapter 3 Withholding and FATCA Withholding will become applicable to OCC and its Clearing Members, however, once Section 871(m) applies to listed options commencing January 1, 2017.

1. Impact on OCC and its Clearing Members

The application of Section 871(m) to listed options transactions that are Section 871(m) Transactions in combination with Chapter 3 Withholding and FATCA Withholding will have significant implications for OCC and its Clearing Members. These implications differ depending upon whether the Clearing Member involved in the transaction is a U.S. firm or a non-U.S. firm. When a U.S. Clearing Member is involved, Section 871(m) is relevant if the Clearing Member is acting (directly or indirectly) on behalf of a non-U.S. customer.[16] When a U.S. Clearing Member is acting for a foreign customer, the U.S. Clearing Member will need to determine whether the transaction is a Section 871(m) Transaction, and, if so, the amount of any dividend equivalents subject to withholding. Under Chapter 3 and Chapter 4, withholding tax will need to be collected by the U.S. Clearing Member on any such dividend equivalent and remitted to the IRS.[17] Reporting by the U.S. Clearing Member with respect to such amounts on IRS Forms 1042 and 1042–S would also be required.[18]

OCC will not be obligated to withhold on any dividend equivalents associated with listed options that are Section 871(m) Transactions when the Clearing Member involved is a U.S. firm. Under the applicable Treasury Regulations, because OCC is treated as making such payments to a U.S. financial institution, OCC is not required to withhold. Rather, the withholding obligation falls on the U.S. Clearing Member if the member is

in connection with each other, the delta of the call and the delta of the put are added together. If the sum is .8 or higher, the two transactions are treated as Section 871(m) Transactions.

[11] *See* 26 U.S.C. 1441–1446.

[12] *See* 26 U.S.C. 1471–1474. FATCA stands for the Foreign Account Tax Compliance Act, which is found in Chapter 4 of subtitle A of Title 26. References in this filing to ''Chapter 4'' are references to FATCA, and vice versa.

[13] *See* 26 CFR 1.1471–0 through 1.1474–1.1474–7.

[14] Withholdable payments include U.S. source dividends, as defined in 26 U.S.C. 1441(b), and dividend equivalents are treated as U.S. source dividends for this purpose. 26 U.S.C. 871(m)(1).

[15] The types of payments subject to FATCA Withholding are generally the same as those subject to Chapter 3 Withholding, although FATCA Withholding also applies to gross proceeds from the sale or other disposition of any instrument that gives rise to such payments. *See* 26 U.S.C. 1473(1). Gross proceeds withholding under FATCA is scheduled to become effective in 2019.

[16] Section 871(m) is not relevant if the U.S. Clearing Member is acting on behalf of a U.S. customer or for its own account.

[17] The obligation to withhold arises under both Chapter 3 and Chapter 4 (*i.e.,* FATCA), but duplicate withholding is not required. Under Section 1474(d) and 26 CFR 1.1474–6T(b)(1), amounts withheld under FATCA are credited against amounts required to be withheld under chapter 3.

[18] *See* 26 CFR 1.1461–1(c)(2)(i)(L).

acting directly for a non-U.S. person, or potentially on another broker or custodian with a closer connection to the non-U.S. person. Similarly, OCC will not have any tax reporting obligations. Those obligations will typically fall on the broker that has the obligation to withhold. In general terms, OCC is relieved of the obligation to withhold and to report dividend equivalents in this situation because the U.S. Clearing Member, and not OCC, is the last U.S. person with custody or control over the relevant payment or funds before they leave the United States. Without regard to the proposed rule change described herein, therefore, Section 871(m) will require OCC's U.S. Clearing Members with foreign customers to develop and maintain systems (i) to identify options transactions that are Section 871(m) Transactions (including under the Combination Rule),[19] (ii) to determine the amount of any dividend equivalents, and (iii) to effectuate withholding. Developing these systems will be challenging and costly.

The situation is very different when the Clearing Member involved is a non-U.S. firm. (As noted above, OCC currently has eight non-U.S. clearing members, all of which are Canadian firms.) Under the Final Section 871(m) Regulations, OCC itself is a withholding agent when a non-U.S. Clearing Member enters into a transaction on behalf of a customer or for its own account.[20] In this situation, OCC is the last U.S. person treated as having custody or control over the payment or funds before they leave the United States. Unless the non-U.S. Clearing Members enter into certain agreements with the IRS (described below), under which they assume primary responsibility for Chapter 3 Withholding tax and are FATCA Compliant, OCC would be required to withhold on dividend equivalents with respect to transactions that are Section 871(m) Transactions.[21] In order to carry out these responsibilities, OCC would need to develop and maintain systems (i) to identify transactions that are Section 871(m) Transactions, (ii) to determine the amount of any dividend equivalents, (iii) to effectuate withholding, and (iv) to remit the withheld tax to the IRS. The non-U.S. Clearing Members in this situation generally would not be required to withhold or to report because they already would have been subject to withholding by OCC. Without the proposed rule change, therefore, Section 871(m) by default would impose on the U.S. Clearing Members and OCC—but not on the non-U.S. Clearing Members—the responsibility for withholding and reporting on dividend equivalents. The proposed rule change would transfer OCC's obligations with respect to the non-U.S. Clearing Members to those members, so that they would be treated in a manner analogous to the U.S. Clearing Members, who themselves will be required to withhold and report on dividend equivalents when Section 871(m) becomes effective with respect to listed options.

To address OCC's potential Chapter 3 Withholding and reporting obligations, the agreements that non-U.S. Clearing Members can enter into with the IRS to relieve OCC of these obligations are as follows:

(1) With respect to transactions that the Clearing Member enters into on behalf of customers (that is, as an intermediary), the Clearing Member can enter into a ''qualified intermediary agreement'' with the IRS under which the Clearing Member assumes primary withholding responsibility. If a Clearing Member has such an agreement in place (such member being a ''Qualified Intermediary Assuming Primary Withholding Responsibility''), OCC is relieved of its obligation to withhold under Chapter 3 with respect to the Clearing Member's customer transactions.

(2) With respect to transactions the Clearing Member enters into for its own account (that is, as a principal), the Clearing Member will be able to enter into a qualified intermediary agreement with the IRS (as described above) in which it further agrees, *inter alia,* to assume primary withholding responsibility with respect to all dividends and dividend equivalents it receives and makes.[22] Entities entering into such agreements are referred to as ''Qualified Derivatives Dealers.''

The Treasury Regulations regarding Qualified Derivatives Dealers are currently in temporary form and are subject to change. Treasury and the IRS recently issued Notice 2016–42, which has proposed changes to the ''qualified intermediary agreement'' necessary to expand the Qualified Derivatives Dealer exception to include all transactions in which a Qualified Derivatives Dealer acts as a principal for its own account, regardless of whether it does so in its dealer capacity.[23] If these changes are incorporated into the final qualified intermediary agreement, and if the Clearing Members timely enter into such agreements, OCC does not believe, based on IRS Notice 2016–42, that OCC will be obligated to withhold under Chapter 3 on any transactions entered into by the Clearing Member for its own account.

With respect to FATCA Withholding, OCC would not be required to withhold if the non-U.S. Clearing Member has entered into an agreement with the IRS to provide information about its U.S. account holders or if the Clearing Member is a resident of a country that has entered into an IGA and the member complies with its reporting responsibilities under the local legislation implementing the IGA.

Even if OCC's non-U.S. Clearing Members enter into the agreements with the IRS described above (or with respect to FATCA are resident in a country with an IGA), OCC would still be required to report to the IRS the amounts of dividend equivalents it is treated as paying to those Clearing Members.[24]

2. Preparing for Implementation of Section 871(m) as Applied to Listed Options

Beginning on January 1, 2017, the Final Section 871(m) Regulations would treat OCC as paying dividend equivalents subject to both Chapter 3 Withholding and FATCA Withholding—even though no actual payments are made—when a non-U.S. Clearing Member enters into a listed equity option with an initial delta of .8 or higher. OCC has evaluated its existing systems and services to determine whether and how it may comply with such withholding obligations. As a result of this evaluation, OCC has determined that its existing systems are not capable of effectuating withholding with regard to the transactions processed by OCC. OCC does not have access to the necessary transaction-specific information to determine whether a particular transaction triggers withholding, nor the systems to obtain such information. For example, OCC cannot associate options transactions in a Clearing Member's customer account with any particular customer. Similarly, when an option contract in a Clearing Member's customer account is closed

[19] *See supra* note 9.

[20] *See* 26 CFR 1.1441–7(a)(3)(Example 7).

[21] As proposed, the term ''FACTA [sic] Compliant'' would mean that a FFI Clearing Member has qualified under such procedures promulgated by the IRS as are in effect from time to time to establish an exemption from withholding under FATCA such that OCC will not be required to withhold any amount with respect to any payment or deemed payment to such FFI Clearing Member under FATCA.

[22] *See* 26 CFR 1.1441–1T(e)(6); Notice 2016–42, 2016–29 I.R.B. (July 1, 2016).

[23] The concept of dealer in the tax context is different than in the securities regulatory context, where dealer activity would include both principal trading to facilitate customer activity as well as principal trading solely on behalf of the firm.

[24] *See* 26 CFR 1.1461–1(c)(2)(i)(L).

out, OCC cannot determine the specific contract that is closed out when there are multiple identical contracts in the Clearing Member's customer account.[25]

Even if OCC had access to all necessary information, the daily net settlement process in which OCC engages would not permit OCC to effectuate withholding without introducing significant settlement and liquidity risk, particularly since dividend equivalents on listed options do not involve an actual cash payment to the Clearing Member from which amounts could be withheld. OCC nets credits and debits per Clearing Member for daily settlement. Given OCC's netting, effectuating withholding could require OCC in certain circumstances to apply its own funds in order to remit withholding taxes to the IRS whenever the net credit owed to a non-U.S. Clearing Member is less than the withholding tax. In addition, if a non-U.S. Clearing Member has dividend equivalent payments aggregating $50 million, but the member is in a net debit settlement position for that day because of OCC's daily net crediting and debiting, there would be no payment to this Clearing Member from which OCC could withhold. In this example, OCC would likely need to fund the $15 million withholding tax (30% of $50 million) until such time as the Clearing Member could reimburse OCC. Furthermore, the cost of implementing a withholding system for the small number of Clearing Members that are non-U.S. firms (currently eight out of 115 Clearing Members) would be substantial and disproportionate to the related benefit. Since the cost of developing and maintaining a complex withholding system would be passed on to OCC's Clearing Members at large, it would burden both U.S. Clearing Members and non-U.S. Clearing Members that have entered into the requisite agreements with the IRS and are FATCA Compliant.

Section 871(m) requires OCC's U.S. Clearing Members with foreign customers to build and maintain systems in order to carry out their withholding responsibilities under Chapter 3 and Chapter 4 for dividend equivalents in connection with transactions with their foreign customers. Absent the proposed rule change, OCC's non-U.S. Clearing Members could decide not to develop similarly appropriate systems. Such a decision would force OCC to be in a position to comply with withholding obligations on Section 871(m) Transactions under Chapter 3 and Chapter 4 with regard to its non-U.S. Clearing Members, which, as noted above, OCC cannot do based on the way its settlement process and systems work. If such a situation were to theoretically occur, the resulting compliance costs would be shifted from the non-U.S. Clearing Members to OCC, and would cause such costs to be borne indirectly by OCC's U.S. Clearing Members, which already would be bearing their own compliance costs with regard to Section 871(m) Transactions. Moreover, as noted, the non-U.S. Clearing Members are in a better position than OCC to comply with Chapter 3 and Chapter 4 reporting and withholding requirements for Section 871(m) Transactions because they have customer information that OCC lacks. Under the proposed rule change, the costs associated with developing and maintaining the required systems would be moved back to the non-U.S. Clearing Members, who would essentially be placed in the same position as U.S. Clearing Members in terms of having to incur their own U.S. tax compliance costs.

For the reasons explained above, OCC is proposing amendments to its Rules, as described below, to implement prudent, preventive measures that would require all of OCC's non-U.S. Clearing Members to enter into agreements with the IRS under which they assume primary withholding responsibility, to become Qualified Derivatives Dealers, and to be FATCA Compliant, so as to permit OCC to make payments (and deemed payments of dividend equivalents) to such Clearing Members free from U.S. withholding tax. In preparation for the proposed rule change and the implementation of Section 871(m) as applied to listed options, OCC has asked its non-U.S. Clearing Members to provide OCC with tax documentation certifying their tax status for purposes of both FATCA and Chapter 3 Withholding. All of these Clearing Members are Canadian firms and, in response to OCC's request, each of them has provided documentation certifying that it is a Reporting Model 1 FFI under the IGA with Canada, and therefore FATCA Compliant. Each has also certified that for Chapter 3 Withholding purposes, it is a Qualified Intermediary Assuming Primary Withholding Responsibility. None of these Clearing Members are currently Qualified Derivatives Dealers because the IRS has not yet finalized the relevant regulations and the associated agreement that must be entered into with the IRS. The IRS is expected to finalize the regulations and provide the agreement language before January 1, 2017. If the IRS does not take any further action before January 1, 2017, then the regulations will go into effect, as they are currently written, on January 1, 2017. In that case, FFI Clearing Members would become subject to withholding by OCC with respect to Section 871(m) Transactions in which the FFI Clearing Members are acting as a principal (*i.e.,* transactions for the member's own account). Because of the practical difficulty OCC would encounter in attempting to distinguish dealer transactions in which the FFI Clearing Member is acting as an intermediary versus those in which it is acting as a principal, OCC will not allow the FFI Clearing Members to clear any dealer trades in the absence of final guidance or the ability of OCC's FFI Clearing Members to distinguish intermediary versus principal transactions in a manner that would allow OCC to process intermediary transactions free of any withholding obligations under Section 871(m). As discussed above, however, OCC expects the IRS to finalize the regulations and to provide the relevant agreement language before January 1, 2017.

B. Proposed Amendments to OCC's By-Laws and Rules

For the reasons discussed above, OCC is proposing a number of amendments to its By-Laws and Rules designed to require that, as a general requirement for membership, all existing and future Clearing Members that are treated as non-U.S. entities for U.S. federal income tax purposes must enter into appropriate agreements with the IRS and be FATCA Compliant, such that OCC will not be responsible for withholding on dividend equivalents under Section 871(m). Specifically, OCC proposes to amend Article I of its By-Laws to include the following defined terms. The term ''FFI Clearing Member'' would mean any Clearing Member that is treated as a non-U.S. entity for U.S. federal income tax purposes. The term ''Dividend Equivalent'' would be defined as having the meaning provided in Section 871(m) of the I.R.C. and related Treasury Regulations and other official interpretations thereof. The term ''FATCA'' would be defined as meaning: (i) The provisions of Sections 1471 through 1474 of the Internal Revenue Code of 1986, as amended, which were enacted as part of The Foreign Account

[25] Contracts with identical terms but entered into on different days or at different times will have different initial deltas. As a result, some (those with initial deltas above .8) may be Section 871(m) Transactions, while others may not be. It is thus critical to know which specific contract is closed out for purposes of determining if dividend equivalents arise with respect to a particular contract that is a Section 871(m) Transaction.

Tax Compliance Act (or any amendment thereto or successor sections thereof), and related Treasury Regulations and other official interpretations thereof, as in effect from time to time, and (ii) the provisions of any intergovernmental agreement to implement The Foreign Account Tax Compliance Act as in effect from time to time between the United States and the jurisdiction of the FFI Clearing Member's residency. The term ''FATCA Compliant'' would mean, with respect to an FFI Clearing Member, that such FFI Clearing Member has qualified under such procedures promulgated by the IRS as are in effect from time to time to establish exemption from withholding under FATCA such that OCC will not be required to withhold any amount with respect to any payment or deemed payment to such FFI Clearing Member under FATCA. The term ''Qualified Intermediary Assuming Primary Withholding Responsibility'' would mean an FFI Clearing Member that has entered into an agreement with the IRS to be a qualified intermediary and to assume primary responsibility for reporting and for collecting and remitting withholding tax under Chapter 3 and Chapter 4 of subtitle A, and Chapter 61 and Section 3406, of the I.R.C. with respect to any income (including Dividend Equivalents) arising from transactions entered into by the Clearing Member with OCC as an intermediary, including transactions entered into on behalf of such Clearing Member's customers. The term ''Qualified Derivatives Dealer'' would be defined as an FFI Clearing Member that has entered into an agreement with IRS that permits OCC to make Dividend Equivalent payments to such clearing member free from U.S. withholding tax under Chapter 3 and Chapter 4 of subtitle A, and Chapter 61 and Section 3406, of the I.R.C. with respect to transactions entered into by such clearing member with OCC as a principal for such Clearing Member's own account. ''Section 871(m) Effective Date'' would be defined as meaning January 1, 2017, or, if later, the date on which Section 871(m) and related Treasury Regulations and other official interpretations thereof, first apply to listed options transactions. Finally, ''Section 871(m) Implementation Date'' would mean December 1, 2016, or, if later, the date that is 30 days before the Section 871(m) Effective Date.[26]

The proposed rule change also would add Section 1(e) to Article V of OCC's By-Laws, which would require any applicant, that if admitted to membership would be an FFI Clearing Member, to be a Qualified Intermediary Assuming Primary Withholding Responsibility and to be FATCA Compliant beginning on the Section 871(m) Implementation Date. In addition, if the applicant intends to trade for its own account, the applicant would be required to be a Qualified Derivatives Dealer.

Furthermore, the proposed rule change would impose additional requirements on FFI Clearing Members. Specifically, proposed Rule 310(d)(1) would prohibit FFI Clearing Members from conducting any transaction or activity through OCC unless the Clearing Member is a Qualified Intermediary Assuming Primary Withholding Responsibility and FATCA Compliant, beginning on the Section 871(m) Effective Date. In addition, FFI Clearing Members would not be permitted to enter into a transaction for their own accounts unless such Clearing Member is a Qualified Derivatives Dealer and such transaction is within the scope of the exemption from withholding tax for Dividend Equivalents paid to Qualified Derivatives Dealers.

Proposed Rule 310(d)(2) would require each FFI Clearing Member to certify annually to OCC, beginning on the Section 871(m) Implementation Date, that it satisfies the above requirements and also to update its certification to OCC (*viz.,* a completed Form W–8IMY electing primary withholding responsibility and Qualified Derivatives Dealer status) if required by applicable law or administrative guidance or if its certification is no longer accurate. Proposed Rule 310(d)(3) also would require each FFI Clearing Member to provide OCC with the information it needs relating to Dividend Equivalents, in sufficient detail and in a sufficiently timely manner, for OCC to comply with its obligation under Chapters 3 and 4 to make required reports to the IRS regarding Dividend Equivalents and the transactions giving rise to same between OCC and the FFI Clearing Member.

Additionally, proposed Rule 310(d)(4) would require each FFI Clearing Member to inform OCC promptly if it is not, or has reason to know that it will not be, in compliance with Rule 310(d) within 2 days of knowledge thereof This rule ensures that OCC will be notified in a timely manner in the event that an FFI Clearing Member no longer maintains the appropriate arrangements described above to ensure that all withholding and reporting obligations with respect to Dividend Equivalents under Section 871(m) and Chapter 3 and 4 are being fulfilled.

Finally, proposed Rule 310(d)(5) would require each FFI Clearing Member to indemnify OCC for any loss, liability, or expense sustained by OCC resulting from such member's failure to comply with proposed Rule 310(d). As discussed above, a Dividend Equivalent is deemed to arise if a dividend is paid on the underlying stock while an option is outstanding, even though no corresponding payment is made on the option. Due to the nature of OCC's settlement process, there may be no actual payments to the FFI Clearing Member from which OCC could withhold in order to address a liability or expense incurred by OCC arising from a member's failure to comply with the proposed rules. As a result, if OCC were required to satisfy any liability or expense caused by such member's failure to comply out of OCC's own funds, OCC would look to the FFI Clearing Member to indemnify OCC for such losses.

II. Discussion and Commission Findings

Section 19(b)(2)(C) of the Act[27] directs the Commission to approve a proposed rule change of a self-regulatory organization if it finds that the rule change, as proposed, is consistent with the requirements of the Act and the rules and regulations thereunder applicable to such organization. The Commission finds that the proposed rule change is consistent with Section 17A(b)(3)(F) of the Act,[28] which requires, among other things, that the rules of a clearing agency: (i) Promote the prompt and accurate clearance and settlement of securities transactions and, to the extent applicable, derivative agreements, contracts, and transactions; (ii) assure the safeguarding of securities and funds which are in the custody or control of the clearing agency or for which it is responsible; and (iii) are not designed to permit unfair discrimination among participants in the use of the clearing agency.

According to OCC, the proposed rule change is needed to eliminate the uncertainty in funds settlement that

[26] Although withholding with regard to Dividend Equivalent payments to non-U.S. clearing members is scheduled take effect beginning January 1, 2017, the proposed amendments to the By-Laws and Rules would require existing non-U.S. clearing members to provide documentation certifying their compliance with the requirements of Rule 310(d) 30 days prior to January 1, 2017, in order for OCC to review the certification materials and to address in a timely manner any potential non-compliance, in accordance with its Rules.

[27] 15 U.S.C. 78s(b)(2)(C).

[28] 15 U.S.C. 78q–1(b)(3)(F).

otherwise would arise if OCC were subject to withholding obligations with respect to Dividend Equivalents under Section 871(m). As noted above in Section I.A.2, given OCC's daily net settlement process, OCC may be required to apply its own funds if it were obligated to effectuate withholdings to the IRS pursuant to Section 871(m). The assumption of withholding responsibilities by OCC would introduce uncertainty and risks around the settlement of funds at OCC. The proposed rule change would transfer the obligation for any such withholding (and any resulting liability) to FFI Clearing Members by requiring FFI Clearing Members to enter into certain agreements with the IRS under which the FFI Clearing Member assumes primary withholding responsibilities with respect to transactions that it enters into on behalf of customers (*i.e.,* as an intermediary) or for its own account (*i.e.,* as a principal) and to be FATCA Compliant. The proposed rule change therefore would eliminate the potential uncertainty and risks in the daily settlement of funds at OCC that otherwise would be imposed by Section 871(m)'s new mandate. Thus, the Commission finds that the proposed rule change is designed to promote the prompt and accurate clearance and settlement of securities and derivatives transactions, and the safeguarding of securities and funds at OCC. While the proposed rule change would impose additional requirements and/or restrictions on FFI Clearing Members, the proposed rules are designed to address in a targeted and proportionate manner specific issues and potential risks to OCC arising from those FFI Clearing Members whose membership creates potential withholding obligations for OCC under the revised tax provisions. The Commission therefore finds that the proposed rule change does not unfairly discriminate among participants in the use of the clearing agency. Based on the above, the Commission finds that the proposed rule change is consistent with Section 17A(b)(3)(F) of the Act.[29]

III. Solicitation of Comments

Interested persons are invited to submit written data, views and arguments concerning the foregoing, including whether the proposed rule change, as modified by Amendment No. 1, is consistent with the Act. Comments may be submitted by any of the following methods:

Electronic Comments

- Use the Commission's Internet comment form (*http://www.sec.gov/rules/sro.shtml*); or
- Send an email to *rule-comments@sec.gov.* Please include File Number SR–OCC–2016–014 on the subject line.

Paper Comments

- Send paper comments in triplicate to Secretary, Securities and Exchange Commission, 100 F Street NE., Washington, DC 20549–1090.

All submissions should refer to File Number SR–OCC–2016–014. This file number should be included on the subject line if email is used. To help the Commission process and review your comments more efficiently, please use only one method. The Commission will post all comments on the Commission's Internet Web site (*http://www.sec.gov/rules/sro.shtml*). Copies of the submission, all subsequent amendments, all written statements with respect to the proposed rule change that are filed with the Commission, and all written communications relating to the proposed rule change between the Commission and any person, other than those that may be withheld from the public in accordance with the provisions of 5 U.S.C. 552, will be available for Web site viewing and printing in the Commission's Public Reference Room, 100 F Street NE., Washington, DC 20549, on official business days between the hours of 10:00 a.m. and 3:00 p.m. Copies of such filings also will be available for inspection and copying at the principal office of OCC and on OCC's Web site at *http://www.theocc.com/components/docs/legal/rules_and_bylaws/sr_occ_16_014.pdf.*

All comments received will be posted without change; the Commission does not edit personal identifying information from submissions. You should submit only information that you wish to make available publicly.

All submissions should refer to File Number SR–OCC–2016–014 and should be submitted on or before December 27, 2016.

IV. Accelerated Approval of Proposed Rule Change, as Modified by Amendment No. 1

As discussed above, OCC submitted Amendment No. 1 in order to adjust and clarify the date by which affected Clearing Members would need to demonstrate compliance with the proposed rule change. Amendment No. 1 does not raise any novel issues, and the filing has been designed to facilitate OCC's compliance with the requirements of another applicable regulatory regime. Accordingly, the Commission finds good cause, pursuant to Section 19(b)(2) of the Act,[30] to approve the filing, as modified by Amendment No. 1, on an accelerated basis prior to the 30th day after the date of the publication in the **Federal Register** of the Notice and the notice of Amendment No. 1 to the filing.

V. Conclusion

On the basis of the foregoing, the Commission finds that the proposal is consistent with the requirements of the Act, and in particular, with the requirements of Section 17A of the Act[31] and the rules and regulations thereunder.

It is therefore ordered, pursuant to Section 19(b)(2) of the Act,[32] that the proposed rule change (SR–OCC–2016–014), as modified by Amendment No. 1, be, and it hereby is, approved on an accelerated basis.

For the Commission, by the Division of Trading and Markets, pursuant to delegated authority.[33]

Eduardo A. Aleman,

Assistant Secretary.

[FR Doc. 2016–29163 Filed 12–5–16; 8:45 am]

BILLING CODE 8011–01–P

[29] 15 U.S.C. 78q–1(b)(3)(F).

[30] 15 U.S.C. 78s(b)(2).

[31] In approving this proposed rule change, the Commission has considered the proposed rule's impact on efficiency, competition, and capital formation. *See* 15 U.S.C. 78c(f).

[32] 15 U.S.C. 78s(b)(2).

[33] 17 CFR 200.30–3(a)(12).

SECURITIES AND EXCHANGE COMMISSION

Sunshine Act Meeting

Notice is hereby given, pursuant to the provisions of the Government in the Sunshine Act, Public Law 94–409, that the Securities and Exchange Commission Investor Advisory Committee will hold a meeting on Thursday, December 8, 2016, in Multi-Purpose Room LL–006 at the Commission's headquarters, 100 F Street NE., Washington, DC 20549. The meeting will begin at 9:30 a.m. (ET) and will be open to the public. Seating will be on a first-come, first-served basis. Doors will open at 9:00 a.m. Visitors will be subject to security checks. The meeting will be webcast on the Commission's Web site at *www.sec.gov.*

On November 17, 2016, the Commission issued notice of the Committee meeting (Release No. 33–10257), indicating that the meeting is open to the public (except during that

portion of the meeting reserved for an administrative work session during lunch), and inviting the public to submit written comments to the Committee. This Sunshine Act notice is being issued because a quorum of the Commission may attend the meeting.

The agenda for the meeting includes: Remarks from Commissioners; a discussion regarding investor protection priorities for the New Year; the announcement of election results for open officer positions; an update on the Commission's response to the rulemaking mandate of the Fixing America's Surface Transportation Act concerning public company disclosure requirements; and a nonpublic administrative work session during lunch.

For further information, please contact Brent J. Fields from the Office of the Secretary at (202) 551–5400.

Dated: December 1, 2016.

Brent J. Fields,

Secretary.

[FR Doc. 2016–29295 Filed 12–2–16; 11:15 am]

BILLING CODE 8011–01–P

SECURITIES AND EXCHANGE COMMISSION

[Release No. 34–79432; File No. SR–MIAX–2016–45]

Self-Regulatory Organizations; Miami International Securities Exchange LLC; Notice of Filing and Immediate Effectiveness of a Proposed Rule Change To Amend Exchange Rule 510 To Extend the Penny Pilot Program

November 30, 2016.

Pursuant to the provisions of Section 19(b)(1) of the Securities Exchange Act of 1934 (''Act'') [1] and Rule 19b–4 thereunder,[2] notice is hereby given that, on November 21, 2016, Miami International Securities Exchange LLC (''MIAX'' or ''Exchange'') filed with the Securities and Exchange Commission (''Commission'') a proposed rule change as described in Items I, II, and III below, which Items have been prepared by the Exchange. The Commission is publishing this notice to solicit comments on the proposed rule change from interested persons.

I. Self-Regulatory Organization's Statement of the Terms of Substance of the Proposed Rule Change

The Exchange is filing a proposal to amend Rule 510, Interpretations and Policies .01 to extend the pilot program for the quoting and trading of certain options in pennies (the ''Penny Pilot Program'').

The text of the proposed rule change is available on the Exchange's Web site at *http://www.miaxoptions.com/filter/wotitle/rule_filing,* at MIAX's principal office, and at the Commission's Public Reference Room.

II. Self-Regulatory Organization's Statement of the Purpose of, and Statutory Basis for, the Proposed Rule Change

In its filing with the Commission, the Exchange included statements concerning the purpose of and basis for the proposed rule change and discussed any comments it received on the proposed rule change. The text of these statements may be examined at the places specified in Item IV below. The Exchange has prepared summaries, set forth in sections A, B, and C below, of the most significant aspects of such statements.

A. Self-Regulatory Organization's Statement of the Purpose of, and the Statutory Basis for, the Proposed Rule Change

1. Purpose

The Exchange is a participant in an industry-wide pilot program that provides for the quoting and trading of certain option classes in penny increments (the ''Penny Pilot Program'' or ''Program''). The Penny Pilot Program allows the quoting and trading of certain option classes in minimum increments of $0.01 for all series in such option classes with a price of less than $3.00; and in minimum increments of $0.05 for all series in such option classes with a price of $3.00 or higher. Options overlying the PowerShares QQQ™ (''QQQ''), SPDR® S&P 500® ETF (''SPY''), and iShares® Russell 2000 ETF (''IWM''), however, are quoted and traded in minimum increments of $0.01 for all series regardless of the price. The Penny Pilot Program was initiated at the then existing option exchanges in January 2007 [3] and currently includes more than 300 of the most active option classes. The Penny Pilot Program is currently scheduled to expire on December 31, 2016.[4] The purpose of the proposed rule change is to extend the Penny Pilot Program in its current format through June 30, 2017.

In addition to the extension of the Penny Pilot Program through June 30, 2017, the Exchange proposes to extend one other date in the Rule. Currently, Interpretations and Policies .01 states that the Exchange will replace any Penny Pilot issues that have been delisted with the next most actively traded multiply listed option classes that are not yet included in the Penny Pilot Program, and that the replacement issues will be selected based on trading activity in the previous six months. Such option classes will be added to the Penny Pilot Program on the second trading day following July 1, 2016.[5] Because this date has expired and the Exchange intends to continue this practice for the duration of the Penny Pilot Program, the Exchange is proposing to amend the Rule to reflect that such option classes will be added to the Penny Pilot Program on the second trading day following January 1, 2017.

The purpose of this provision is to reflect the new date on which replacement issues may be added to the Penny Pilot Program.

2. Statutory Basis

MIAX believes that its proposed rule change is consistent with Section 6(b) of the Act [6] in general, and furthers the objectives of Section 6(b)(5) of the Act [7] in particular, in that it is designed to prevent fraudulent and manipulative acts and practices, to promote just and equitable principles of trade, to foster cooperation and coordination with persons engaged in facilitating transactions in securities, to remove impediments to and perfect the mechanisms of a free and open market and a national market system and, in general, to protect investors and the public interest. In particular, the proposed rule change, which extends the Penny Pilot Program for six months, allows the Exchange to continue to participate in a program that has been viewed as beneficial to traders, investors and public customers and viewed as successful by the other options exchanges participating in it.

[1] 15 U.S.C. 78s(b)(1).

[2] 17 CFR 240.19b–4.

[3] *See* Securities Exchange Act Release Nos. 55154 (January 23, 2007), 72 FR 4743 (February 1, 2007) (SR–CBOE–2006–92); 55161 (January 24, 2007), 72 FR 4754 (February 1, 2007) (SR–ISE–2006–62); 54688 (December 6, 2006), 71 FR 74979 (December 13, 2006) (SR–Phlx–2006–74); 54590 (October 12, 2006), 71 FR 61525 (October 18, 2006) (SR–NYSEArca–2006–73); and 54741 (November 9, 2006), 71 FR 67176 (November 20, 2006) (SR–Amex–2006–106).

[4] *See* Securities Exchange Act Release No. 78080 (June 15, 2016), 81 FR 40377 (June 21, 2016) (SR–MIAX–2016–16) (extending the Penny Pilot Program from June 30, 2016, to December 31, 2016).

[5] The month immediately preceding a replacement class's addition to the Pilot Program (*i.e.,* June) is not used for purposes of the six-month analysis. For example, a replacement added on the second trading day following July 1, 2016, will be identified based on trading activity from December 1, 2015, through May 31, 2016.

[6] 15 U.S.C. 78f(b).

[7] 15 U.S.C. 78f(b)(5).

B. Self-Regulatory Organization's Statement on Burden on Competition

The Exchange does not believe that the proposed rule change will impose any burden on competition that is not necessary or appropriate in furtherance of the purposes of the Act. Specifically, the Exchange believes that, by extending the expiration of the Pilot Program, the proposed rule change will allow for further analysis of the Penny Pilot Program and a determination of how the Program should be structured in the future. In doing so, the proposed rule change will also serve to promote regulatory clarity and consistency, thereby reducing burdens on the marketplace, facilitating investor protection, and fostering a competitive environment. In addition, consistent with previous practices, the Exchange believes the other options exchanges will be filing similar extensions of the Penny Pilot Program.

C. Self-Regulatory Organization's Statement on Comments on the Proposed Rule Change Received From Members, Participants, or Others

Written comments were neither solicited nor received.

III. Date of Effectiveness of the Proposed Rule Change and Timing for Commission Action

Because the foregoing proposed rule change does not: (i) Significantly affect the protection of investors or the public interest; (ii) impose any significant burden on competition; and (iii) become operative for 30 days after the date of the filing, or such shorter time as the Commission may designate, it has become effective pursuant to 19(b)(3)(A) of the Act [8] and Rule 19b–4(f)(6) [9] thereunder.

At any time within 60 days of the filing of the proposed rule change, the Commission summarily may temporarily suspend such rule change if it appears to the Commission that such action is necessary or appropriate in the public interest, for the protection of investors, or otherwise in furtherance of the purposes of the Act. If the Commission takes such action, the Commission shall institute proceedings to determine whether the proposed rule should be approved or disapproved.

[8] 15 U.S.C. 78s(b)(3)(A).

[9] 17 CFR 240.19b–4(f)(6). In addition, Rule 19b–4(f)(6)(iii) requires a self-regulatory organization to give the Commission written notice of its intent to file the proposed rule change along with a brief description and the text of the proposed rule change, at least five business days prior to the date of filing of the proposed rule change, or such shorter time as designated by the Commission. The Exchange has satisfied this requirement.

IV. Solicitation of Comments

Interested persons are invited to submit written data, views, and arguments concerning the foregoing, including whether the proposed rule change is consistent with the Act. Comments may be submitted by any of the following methods:

Electronic Comments

- Use the Commission's Internet comment form (*http://www.sec.gov/rules/sro.shtml*); or
- Send an email to *rule-comments@sec.gov.* Please include File Number SR–MIAX–2016–45 on the subject line.

Paper Comments

- Send paper comments in triplicate to Secretary, Securities and Exchange Commission, 100 F Street NE., Washington, DC 20549–1090.

All submissions should refer to File Number SR–MIAX–2016–45. This file number should be included on the subject line if email is used. To help the Commission process and review your comments more efficiently, please use only one method. The Commission will post all comments on the Commission's Internet Web site (*http://www.sec.gov/rules/sro.shtml*). Copies of the submission, all subsequent amendments, all written statements with respect to the proposed rule change that are filed with the Commission, and all written communications relating to the proposed rule change between the Commission and any person, other than those that may be withheld from the public in accordance with the provisions of 5 U.S.C. 552, will be available for Web site viewing and printing in the Commission's Public Reference Room, 100 F Street NE., Washington, DC 20549–1090, on official business days between the hours of 10:00 a.m. and 3:00 p.m. Copies of the filing also will be available for inspection and copying at the principal office of the Exchange. All comments received will be posted without change; the Commission does not edit personal identifying information from submissions. You should submit only information that you wish to make available publicly. All submissions should refer to File Number SR–MIAX–2016–45 and should be submitted on or before December 27, 2016.

For the Commission, by the Division of Trading and Markets, pursuant to delegated authority.[10]

Eduardo A. Aleman,

Assistant Secretary.

[FR Doc. 2016–29161 Filed 12–5–16; 8:45 am]

BILLING CODE 8011–01–P

[10] 17 CFR 200.30–3(a)(12).

SECURITIES AND EXCHANGE COMMISSION

[Release No. 34–79429; File No. SR–BOX–2016–55]

Self-Regulatory Organizations; BOX Options Exchange LLC; Notice of Filing and Immediate Effectiveness of a Proposed Rule Change To Amend Rule 7260 by Extending the Penny Pilot Program Through June 30, 2017

November 30, 2016.

Pursuant to Section 19(b)(1) of the Securities Exchange Act of 1934 (''Act''),[1] and Rule 19b–4 thereunder,[2] notice is hereby given that on November 29, 2016, BOX Options Exchange LLC (the ''Exchange'') filed with the Securities and Exchange Commission (''Commission'') the proposed rule change as described in Items I and II below, which Items have been prepared by the self-regulatory organization. The Commission is publishing this notice to solicit comments on the proposed rule from interested persons.

I. Self-Regulatory Organization's Statement of the Terms of Substance of the Proposed Rule Change

The Exchange proposes to amend Rule 7260 by extending the Penny Pilot Program through June 30, 2017. The text of the proposed rule change is available from the principal office of the Exchange, at the Commission's Public Reference Room and also on the Exchange's Internet Web site at *http://boxexchange.com.*

II. Self-Regulatory Organization's Statement of the Purpose of, and Statutory Basis for, the Proposed Rule Change

In its filing with the Commission, the self-regulatory organization included statements concerning the purpose of, and basis for, the proposed rule change and discussed any comments it received on the proposed rule change. The text of these statements may be examined at the places specified in Item IV below. The self-regulatory organization has prepared summaries, set forth in

[1] 15 U.S.C. 78s(b)(1).

[2] 17 CFR 240.19b–4.

Sections A, B, and C below, of the most significant aspects of such statements.

A. Self-Regulatory Organization's Statement of the Purpose of, and Statutory Basis for, the Proposed Rule Change

1. Purpose

The Exchange proposes to extend the effective time period of the Penny Pilot Program that is currently scheduled to expire on December 31, 2016, until June 30, 2017.[3] The Penny Pilot Program permits certain classes to be quoted in penny increments. The minimum price variation for all classes included in the Penny Pilot Program, except for PowerShares QQQ Trust (''QQQQ'')®, SPDR S&P 500 Exchange Traded Funds (''SPY''), and iShares Russell 2000 Index Funds (''IWM''), will continue to be $0.01 for all quotations in options series that are quoted at less than $3 per contract and $0.05 for all quotations in options series that are quoted at $3 per contract or greater. QQQQ, SPY, and IWM will continue to be quoted in $0.01 increments for all options series.

The Exchange may replace, on a semi-annual basis, any Pilot Program classes that have been delisted on the second trading day following January 1, 2017. The Exchange notes that the replacement classes will be selected based on trading activity for the six month period beginning June 1, 2016 and ending November 30, 2016 for the January 2017 replacements. The Exchange will employ the same parameters to prospective replacement classes as approved and applicable under the Pilot Program, including excluding high-priced underlying securities. The Exchange will distribute a Regulatory Circular notifying Participants which replacement classes shall be included in the Penny Pilot Program.

BOX is specifically authorized to act jointly with the other options exchanges participating in the Pilot Program in identifying any replacement class.

2. Statutory Basis

The Exchange believes that the proposal is consistent with the requirements of Section 6(b) of the Act,[4] in general, and Section 6(b)(5) of the Act,[5] in particular, in that it is designed to prevent fraudulent and manipulative acts and practices, to promote just and equitable principles of trade, to foster cooperation and coordination with persons engaged in facilitating transactions in securities, and to remove impediments to and perfect the mechanism of a free and open market and a national market system, and, in general protect investors and the public interest.

In particular, the proposed rule change, which extends the Penny Pilot until June 30, 2017 and changes the dates for replacing Penny Pilot issues that were delisted to the second trading day following January 1, 2017, will enable public customers and other market participants to express their true prices to buy and sell options for the benefit of all market participants. This is consistent with the Act.

B. Self-Regulatory Organization's Statement on Burden on Competition

The Exchange does not believe that the proposed rule change will impose any burden on competition not necessary or appropriate in furtherance of the purposes of the Act. To the contrary, this proposal is pro-competitive because it allows Penny Pilot issues to continue trading on the Exchange. Moreover, the Exchange believes that the proposed rule change will allow for further analysis of the Pilot and a determination of how the Pilot should be structured in the future; and will serve to promote regulatory clarity and consistency, thereby reducing burdens on the marketplace and facilitating investor protection. The Pilot is an industry wide initiative supported by all other option exchanges. The Exchange believes that extending the Pilot will allow for continued competition between market participants on the Exchange trading similar products as their counterparts on other exchanges, while at the same time allowing the Exchange to continue to compete for order flow with other exchanges in option issues trading as part of the Pilot.

C. Self-Regulatory Organization's Statement on Comments on the Proposed Rule Change Received From Members, Participants, or Others

The Exchange has neither solicited nor received comments on the proposed rule change.

III. Date of Effectiveness of the Proposed Rule Change and Timing for Commission Action

The Exchange has filed the proposed rule change pursuant to Section 19(b)(3)(A)(iii) of the Act[6] and Rule 19b–4(f)(6) thereunder.[7] Because the proposed rule change does not: (i) Significantly affect the protection of investors or the public interest, (ii) impose any significant burden on competition, and (iii) become operative for 30 days after the date of the filing, or such shorter time as the Commission may designate if consistent with the protection of investors and the public interest, the proposed rule change has become effective pursuant to Section 19(b)(3)(A)(iii) of the Act[8] and Rule 19b–4(f)(6) thereunder.[9]

At any time within 60 days of the filing of the proposed rule change, the Commission summarily may temporarily suspend such rule change if it appears to the Commission that such action is necessary or appropriate in the public interest, for the protection of investors, or otherwise in furtherance of the purposes of the Act. If the Commission takes such action, the Commission shall institute proceedings to determine whether the proposed rule should be approved or disapproved.

IV. Solicitation of Comments

Interested persons are invited to submit written data, views and arguments concerning the foregoing, including whether the proposed rule change is consistent with the Act. Comments may be submitted by any of the following methods:

Electronic Comments

- Use the Commission's Internet comment form (*http://www.sec.gov/rules/sro.shtml*); or
- Send an email to *rule-comments@sec.gov*. Please include File Number SR–BOX–2016–55 on the subject line.

Paper Comments

- Send paper comments in triplicate to Secretary, Securities and Exchange Commission, 100 F Street NE., Washington, DC 20549–1090.

[3] The Penny Pilot Program has been in effect on the Exchange since its inception in May 2012. *See* Securities Exchange Act Release Nos. 66871 (April 27, 2012), 77 FR 26323 (May 3, 2012) (File No.10–206, In the Matter of the Application of BOX Options Exchange LLC for Registration as a National Securities Exchange Findings, Opinion, and Order of the Commission), 67328 (June 29, 2012), 77 FR 40123 (July 6, 2012) (SR–BOX–2012–007), 68425 (December 13, 2012), 77 FR 75234 (December 19, 2013) (SR–BOX–2012–021), 69789 (June 18, 2013), 78 FR 37854 (June 24, 2013) (SR–BOX–2013–31), 71056 (December 12, 2013), 78 FR 76691 (December 18, 2013) (SR–BOX–2013–56), 72348 (June 9, 2014), 79 FR 33976 (June 13, 2014) (SR–BOX–2014–17), 73822 (December 11, 2014), 79 FR 75606 (December 18, 2014) (SR–BOX–2014–29), 75295 (June 25, 2015), 80 FR 37690 (July 1, 2015) (SR–BOX–2015–23) and 78172 (June 28, 2016), 81 FR 43325 (July 1, 2016) (SR–BOX–2016–24). The extension of the effective date and the revision of the date to replace issues that have been delisted are the only changes to the Penny Pilot Program being proposed at this time.

[4] 15 U.S.C. 78f(b).

[5] 15 U.S.C. 78f(b)(5).

[6] 15 U.S.C. 78s(b)(3)(A).

[7] 17 CFR 240.19b–4(f)(6).

[8] 15 U.S.C. 78s(b)(3)(A).

[9] 17 CFR 240.19b–4(f)(6).

All submissions should refer to File Number SR–BOX–2016–55. This file number should be included on the subject line if email is used. To help the Commission process and review your comments more efficiently, please use only one method. The Commission will post all comments on the Commission's Internet Web site (*http://www.sec.gov/rules/sro.shtml*). Copies of the submission, all subsequent amendments, all written statements with respect to the proposed rule change that are filed with the Commission, and all written communications relating to the proposed rule change between the Commission and any person, other than those that may be withheld from the public in accordance with the provisions of 5 U.S.C. 552, will be available for Web site viewing and printing in the Commission's Public Reference Room, on official business days between the hours of 10:00 a.m. and 3:00 p.m., located at 100 F Street NE., Washington, DC 20549. Copies of such filing also will be available for inspection and copying at the principal office of the Exchange. All comments received will be posted without change; the Commission does not edit personal identifying information from submissions. You should submit only information that you wish to make available publicly. All submissions should refer to File Number SR–BOX–2016–55 and should be submitted on or before December 27, 2016.

For the Commission, by the Division of Trading and Markets, pursuant to delegated authority.[10]

Eduardo A. Aleman,

Assistant Secretary.

[FR Doc. 2016–29174 Filed 12–5–16; 8:45 am]

BILLING CODE 8011–01–P

[10] 17 CFR 200.30–3(a)(12).

SECURITIES AND EXCHANGE COMMISSION

Sunshine Act Meeting

Notice is hereby given, pursuant to the provisions of the Government in the Sunshine Act, Public Law 94–409, that the Securities and Exchange Commission will hold a closed meeting on Thursday, December 8, 2016 at 3 p.m.

Commissioners, Counsel to the Commissioners, the Secretary to the Commission, and recording secretaries will attend the closed meeting. Certain staff members who have an interest in the matters also may be present.

The General Counsel of the Commission, or her designee, has certified that, in her opinion, one or more of the exemptions set forth in 5 U.S.C. 552b(c)(3), (5), (7), 9(B) and (10) and 17 CFR 200.402(a)(3), (a)(5), (a)(7), (a)(9)(ii) and (a)(10), permit consideration of the scheduled matter at the closed meeting.

Commissioner Piwowar, as duty officer, voted to consider the items listed for the closed meeting in closed session, and determined that no earlier notice thereof was possible.

The subject matter of the closed meeting will be: Institution and settlement of injunctive actions; Institution and settlement of administrative proceedings; Formal order of investigation; and Other matters relating to enforcement proceedings.

At times, changes in Commission priorities require alterations in the scheduling of meeting items.

For further information and to ascertain what, if any, matters have been added, deleted or postponed; please contact Brent J. Fields from the Office of the Secretary at (202) 551–5400.

Dated: December 1, 2016.

Brent J. Fields,

Secretary.

[FR Doc. 2016–29296 Filed 12–2–16; 11:15 am]

BILLING CODE 8011–01–P

SECURITIES AND EXCHANGE COMMISSION

[Release No. 34–79430; File No. SR–BatsBYX–2016–36]

Self-Regulatory Organizations; Bats BYX Exchange, Inc.; Notice of Filing and Immediate Effectiveness of a Proposed Rule Change To Make Non-Substantive Changes to the Fee Schedule

November 30, 2016.

Pursuant to Section 19(b)(1) of the Securities Exchange Act of 1934 (the ''Act''),[1] and Rule 19b–4 thereunder,[2] notice is hereby given that on November 18, 2016, Bats BYX Exchange, Inc. (the ''Exchange'' or ''BYX'') filed with the Securities and Exchange Commission (the ''Commission'') the proposed rule change as described in Items I, II, and III below, which Items have been prepared by the Exchange. The Exchange has designated the proposed rule change as one establishing or changing a member due, fee, or other charge imposed by the Exchange under Section 19(b)(3)(A)(ii) of the Act[3] and Rule 19b–4(f)(2) thereunder,[4] which renders the proposed rule change effective upon filing with the Commission. The Commission is publishing this notice to solicit comments on the proposed rule change from interested persons.

[1] 15 U.S.C. 78s(b)(1).

[2] 17 CFR 240.19b–4.

[3] 15 U.S.C. 78s(b)(3)(A)(ii).

[4] 17 CFR 240.19b–4(f)(2).

I. Self-Regulatory Organization's Statement of the Terms of the Substance of the Proposed Rule Change

The Exchange filed a proposal to make several non-substantive changes to the fee schedule applicable to Members[5] and non-members of the Exchange pursuant to Exchange Rules 15.1(a) and (c).

The text of the proposed rule change is available at the Exchange's Web site at *www.batstrading.com,* at the principal office of the Exchange, and at the Commission's Public Reference Room.

II. Self-Regulatory Organization's Statement of the Purpose of, and Statutory Basis for, the Proposed Rule Change

In its filing with the Commission, the Exchange included statements concerning the purpose of and basis for the proposed rule change and discussed any comments it received on the proposed rule change. The text of these statements may be examined at the places specified in Item IV below. The Exchange has prepared summaries, set forth in Sections A, B, and C below, of the most significant parts of such statements.

A. Self-Regulatory Organization's Statement of the Purpose of, and Statutory Basis for, the Proposed Rule Change

1. Purpose

The Exchange proposes to make certain clarifying and non-substantive changes to its fee schedule in order to improve formatting, eliminate certain redundancies, increase overall readability, and provide users with straightforward descriptions to augment overall comprehensibility and usability of the existing fee schedule. The Exchange notes that these changes are purely clerical and do not substantively amend any fee or rebate, nor do they alter the manner in which the Exchange assesses fees or calculates rebates. The proposed changes are simply intended to provide greater transparency to market participants regarding how the Exchange assesses fees and calculates

[5] A Member is defined as ''any registered broker or dealer that has been admitted to membership in the Exchange.'' *See* Exchange Rule 1.5(n).

rebates. Specifically, the Exchange proposes to:

- Capitalize the title of the column setting forth each tier's rate under footnotes 1 and 3;
- amend the title of the column setting forth each tier's rate under footnote2 to simply state ''Fee Per Share to Add.'' The fee offered under footnote 2's Midpoint Peg Tier is available to orders that yield fee code MM. Fee code MM is appended to non-displayed orders that add liquidity using the Mid-Point Peg order type.[6] In renaming this column, the Exchange propose to remove reference to Mid-Point Peg orders as such language is redundant and set forth in the tier's title and list of its applicable fee code;
- amend the name under first column of the tiers listed under footnote 1 to simply state ''Tier 1'', Tier 2'' and ''Tier 3'' as the deleted language is redundant with the respective tier's title or with the description of the tier's criteria;
- replace the phrase ''equal to or greater than'' with ''≥'' in all required criteria cells under footnotes 1, 2, and 3;
- amend the description of the required criteria under the third column of the tiers to begin with ''Member has an'' where applicable. Amending this description is intended to harmonize the description of the tier's criteria with fee schedules of its affiliate exchanges;[7]
- delete a reference to the ROOC routing strategy, which was previously, removed from the Exchange's rulebook.[8] The Exchange previously submitted a proposed rule change for immediate effectiveness to discontinue the ROOC routing strategy and to remove references to the ROOC routing strategy from its rulebook. The Exchange now proposes to delete fee code RN and its rebate, which is appended to orders routed to the Nasdaq Stock Market LLC using the ROOC routing strategy and add liquidity. The Exchange notes since ceasing to offer the ROOC routing option, orders routed to Nasdaq and that add liquidity yield feed code A and receive a rebate of $0.0015 per share, which is the same rebate that was provided under fee code RN.

2. Statutory Basis

The Exchange believes that the proposed rule change is consistent with the requirements of the Act and the rules and regulations thereunder that are applicable to a national securities exchange, and, in particular, with the requirements of Section 6 of the Act.[9] Specifically, the Exchange believes that the proposed rule change is consistent with Sections 6(b)(4) of the Act of the Act [sic],[10] in that it provides for the equitable allocation of reasonable dues, fees and other charges among members and other persons using any facility or system which the Exchange operates or controls. The Exchange believes that the proposed changes are reasonable and equitable because they are intended to simplify the Exchange's fee schedule and provide greater transparency to market participants regarding how the Exchange assesses fees and calculates rebates. The Exchange notes that these changes are purely clerical and do not substantively amend any fee or rebate, nor do they alter the manner in which the Exchange assesses fees or calculates rebates. The Exchange also believes that the proposal is non-discriminatory because it applies uniformly to all Members. Finally, the Exchange believes that the proposed changes will make the fee schedule clearer and eliminate potential investor confusion, thereby removing impediments to and perfecting the mechanism of a free and open market and a national market system, and, in general, protecting investors and the public interest.

B. Self-Regulatory Organization's Statement on Burden on Competition

The Exchange does not believe that the proposed rule change will result in any burden on competition that is not necessary or appropriate in furtherance of the purposes of the Act, as amended. To the contrary, the Exchange believes that the [sic] will not impose any burden on competition as the changes are purely clerical and do not amend and [sic] fee or rebate.

C. Self-Regulatory Organization's Statement on Comments on the Proposed Rule Change Received From Members, Participants, or Others

The Exchange has not solicited, and does not intend to solicit, comments on this proposed rule change. The Exchange has not received any written comments from members or other interested parties.

III. Date of Effectiveness of the Proposed Rule Change and Timing for Commission Action

The foregoing rule change has become effective pursuant to Section 19(b)(3)(A) of the Act[11] and paragraph (f) of Rule 19b–4 thereunder.[12] At any time within 60 days of the filing of the proposed rule change, the Commission summarily may temporarily suspend such rule change if it appears to the Commission that such action is necessary or appropriate in the public interest, for the protection of investors, or otherwise in furtherance of the purposes of the Act.

IV. Solicitation of Comments

Interested persons are invited to submit written data, views, and arguments concerning the foregoing, including whether the proposed rule change is consistent with the Act. Comments may be submitted by any of the following methods:

Electronic Comments

- Use the Commission's Internet comment form (*http://www.sec.gov/rules/sro.shtml*); or
- Send an email to *rule-comments@sec.gov*. Please include File Number SR–BatsBYX–2016–36 on the subject line.

Paper Comments

- Send paper comments in triplicate to Secretary, Securities and Exchange Commission, 100 F Street NE., Washington, DC 20549–1090.

All submissions should refer to File Number SR–BatsBYX–2016–36. This file number should be included on the subject line if email is used. To help the Commission process and review your comments more efficiently, please use only one method. The Commission will post all comments on the Commission's Internet Web site (*http://www.sec.gov/rules/sro.shtml*). Copies of the submission, all subsequent amendments, all written statements with respect to the proposed rule change that are filed with the Commission, and all written communications relating to the proposed rule change between the Commission and any person, other than those that may be withheld from the public in accordance with the provisions of 5 U.S.C. 552, will be available for Web site viewing and printing in the Commission's Public Reference Room, 100 F Street NE., Washington, DC 20549 on official business days between the hours of 10:00 a.m. and 3:00 p.m. Copies of such filing also will be available for

[6] *See* Exchange Rule 11.9(c)(9).

[7] The Exchange's affiliates are Bats BZX Exchange, Inc., Bats EDGA Exchange, Inc. and Bats BZX Exchange, Inc.

[8] *See* Securities Exchange Act Release N. 75547 (July 29, 2015), 80 FR 46369 (August 4, 2015) (SR–BYX–2015–33). *See also* BATS EDGA Exchange and BYX Exchange Decommissioning ROOC Effective August 10, 2015, *available at http://cdn.batstrading.com/resources/release_notes/2015/BATS-EDGA-Exchange-and-BYX-Exchange-Decommissioning-ROOC-Effective-August-10-2015.pdf.*

[9] 15 U.S.C. 78f.

[10] 15 U.S.C. 78f(b)(4).

[11] 15 U.S.C. 78s(b)(3)(A).

[12] 17 CFR 240.19b–4(f).

inspection and copying at the principal office of the Exchange. All comments received will be posted without change; the Commission does not edit personal identifying information from submissions. You should submit only information that you wish to make available publicly. All submissions should refer to File Number SR–BatsBYX–2016–36, and should be submitted on or before December 27, 2016.

For the Commission, by the Division of Trading and Markets, pursuant to delegated authority.[13]

Eduardo A. Aleman,

Assistant Secretary.

[FR Doc. 2016–29159 Filed 12–5–16; 8:45 am]

BILLING CODE 8011–01–P

SECURITIES AND EXCHANGE COMMISSION

[Release No. 34–79433; File No. SR–Nasdaq–2016–160]

Self-Regulatory Organizations; The NASDAQ Stock Market LLC; Notice of Filing and Immediate Effectiveness of Proposed Rule Change To Amend Chapter VI, Section 5 To Extend the Penny Pilot Program

November 30, 2016.

Pursuant to Section 19(b)(1) of the Securities Exchange Act of 1934 (''Act''),[1] and Rule 19b–4 thereunder, [2] notice is hereby given that on November 16, 2016, The NASDAQ Stock Market LLC (''Nasdaq'' or ''Exchange'') filed with the Securities and Exchange Commission (''SEC'' or ''Commission'') the proposed rule change as described in Items I, II, and III below, which Items have been prepared by the Exchange. The Commission is publishing this notice to solicit comments on the proposed rule change from interested persons.

I. Self-Regulatory Organization's Statement of the Terms of Substance of the Proposed Rule Change

The Exchange proposes to amend Chapter VI, Section 5 (Minimum Increments),[3] of the rules of the NASDAQ Options Market (''NOM'') to extend through June 30, 2017 or the date of permanent approval, if earlier, the Penny Pilot Program in options classes in certain issues (''Penny Pilot'' or ''Pilot''), and to change the date when delisted classes may be replaced in the Penny Pilot.[4]

The text of the proposed rule change is set forth below. Proposed new language is *italicized;* deleted text is in brackets.

* * * * *

NASDAQ Stock Market Rules

Options Rules

* * * * *

Chapter VI Trading Systems

* * * * *

Sec. 5 Minimum Increments

(a) The Board may establish minimum quoting increments for options contracts traded on NOM. Such minimum increments established by the Board will be designated as a stated policy, practice, or interpretation with respect to the administration of this Section within the meaning of Section 19 of the Exchange Act and will be filed with the SEC as a rule change for effectiveness upon filing. Until such time as the Board makes a change in the increments, the following principles shall apply:

(1)—(2) No Change.

(3) For a pilot period scheduled to expire on [December 31, 2016]*June 30, 2017* or the date of permanent approval, if earlier, if the options series is trading pursuant to the Penny Pilot program one (1) cent if the options series is trading at less than $3.00, five (5) cents if the options series is trading at $3.00 or higher, unless for QQQQs, SPY and IWM where the minimum quoting increment will be one cent for all series regardless of price. A list of such options shall be communicated to membership via an Options Trader Alert (''OTA'') posted on the Exchange's Web site.

The Exchange may replace any pilot issues that have been delisted with the next most actively traded multiply listed options classes that are not yet included in the pilot, based on trading activity in the previous six months. The replacement issues may be added to the pilot on the second trading day following [July 1, 2016]*January 1, 2017.*

(4) No Change.

(b) No Change.

* * * * *

The text of the proposed rule change is available on the Exchange's Web site at *http://nasdaq.cchwallstreet.com,* at the principal office of the Exchange, and at the Commission's Public Reference Room.

II. Self-Regulatory Organization's Statement of the Purpose of, and Statutory Basis for, the Proposed Rule Change

In its filing with the Commission, the Exchange included statements concerning the purpose of and basis for the proposed rule change and discussed any comments it received on the proposed rule change. The text of these statements may be examined at the places specified in Item IV below. The Exchange has prepared summaries, set forth in sections A, B, and C below, of the most significant aspects of such statements.

A. Self-Regulatory Organization's Statement of the Purpose of, and Statutory Basis for, the Proposed Rule Change

1. Purpose

The purpose of this filing is to amend Chapter VI, Section 5, to extend the Penny Pilot through June 30, 2017 or the date of permanent approval, if earlier,[5] and to change the date when delisted classes may be replaced in the Penny Pilot. The Exchange believes that extending the Penny Pilot will allow for further analysis of the Penny Pilot and a determination of how the program should be structured in the future.

Under the Penny Pilot, the minimum price variation for all participating options classes, except for the Nasdaq-100 Index Tracking Stock (''QQQQ''), the SPDR S&P 500 Exchange Traded Fund (''SPY'') and the iShares Russell 2000 Index Fund (''IWM''), is $0.01 for all quotations in options series that are quoted at less than $3 per contract and $0.05 for all quotations in options series that are quoted at $3 per contract or greater. QQQQ, SPY and IWM are quoted in $0.01 increments for all options series. The Penny Pilot is currently scheduled to expire on December 31, 2016.

The Exchange proposes to extend the time period of the Penny Pilot through June 30, 2017 or the date of permanent approval, if earlier, and to provide a revised date for adding replacement issues to the Penny Pilot. The Exchange proposes that any Penny Pilot Program

---

[13] 17 CFR 200.30–3(a)(12).

[1] 15 U.S.C. 78s(b)(1).

[2] 17 CFR 240.19b–4.

[3] References herein to Chapter and Series refer to rules of the NASDAQ Options Market (''NOM''), unless otherwise noted.

[4] The Penny Pilot was established in March 2008 and was last extended in 2016. *See* Securities Exchange Act Release Nos. 57579 (March 28, 2008), 73 FR 18587 (April 4, 2008)(SR–NASDAQ–2008–026); 75283 (June 24, 2015), 80 FR 37347 (June 30, 2015)(SR–NASDAQ–2015–063) (notice of filing and immediate effectiveness establishing Penny Pilot); and 78037 (June 10, 2016), 81 FR 39299 (June 16, 2016) (SR–NASDAQ–2016–052) (notice of filing and immediate effectiveness extending the Penny Pilot through December 31, 2016).

[5] The options exchanges in the U.S. that have pilot programs similar to the Penny Pilot (together ''pilot programs'') are currently working on a proposal for permanent approval of the respective pilot programs.

issues that have been delisted may be replaced on the second trading day following January 1, 2017. The replacement issues will be selected based on trading activity in the previous six months.[6]

This filing does not propose any substantive changes to the Penny Pilot Program; all classes currently participating in the Penny Pilot will remain the same and all minimum increments will remain unchanged. The Exchange believes the benefits to public customers and other market participants who will be able to express their true prices to buy and sell options have been demonstrated to outweigh the potential increase in quote traffic.

2. Statutory Basis

The Exchange believes that its proposal is consistent with Section 6(b) of the Act,[7] in general, and furthers the objectives of Section 6(b)(5) of the Act,[8] in particular, in that it is designed to prevent fraudulent and manipulative acts and practices, to promote just and equitable principles of trade, to foster cooperation and coordination with persons engaged in facilitating transactions in securities, and to remove impediments to and perfect the mechanism of a free and open market and a national market system and, in general, to protect investors and the public interest.

In particular, the proposed rule change, which extends the Penny Pilot for an additional six months through June 30, 2017 or the date of permanent approval, if earlier, and changes the date for replacing Penny Pilot issues that were delisted to the second trading day following January 1, 2017, will enable public customers and other market participants to express their true prices to buy and sell options for the benefit of all market participants. This is consistent with the Act.

B. Self-Regulatory Organization's Statement on Burden on Competition

The Exchange does not believe that the proposed rule change will impose any burden on competition not necessary or appropriate in furtherance of the purposes of the Act. To the contrary, this proposal is pro-competitive because it allows Penny Pilot issues to continue trading on the Exchange.

Moreover, the Exchange believes that the proposed rule change will allow for further analysis of the Pilot and a determination of how the Pilot should be structured in the future; and will serve to promote regulatory clarity and consistency, thereby reducing burdens on the marketplace and facilitating investor protection.

The Pilot is an industry-wide initiative supported by all other option exchanges. The Exchange believes that extending the Pilot will allow for continued competition between market participants on the Exchange trading similar products as their counterparts on other exchanges, while at the same time allowing the Exchange to continue to compete for order flow with other exchanges in option issues trading as part of the Pilot.

C. Self-Regulatory Organization's Statement on Comments on the Proposed Rule Change Received From Members, Participants, or Others

No written comments were either solicited or received.

III. Date of Effectiveness of the Proposed Rule Change and Timing for Commission Action

Because the foregoing proposed rule change does not: (i) Significantly affect the protection of investors or the public interest; (ii) impose any significant burden on competition; and (iii) become operative for 30 days from the date on which it was filed, or such shorter time as the Commission may designate, it has become effective pursuant to Section 19(b)(3)(A)(iii) of the Act[9] and subparagraph (f)(6) of Rule 19b–4 thereunder.[10]

At any time within 60 days of the filing of the proposed rule change, the Commission summarily may temporarily suspend such rule change if it appears to the Commission that such action is: (i) Necessary or appropriate in the public interest; (ii) for the protection of investors; or (iii) otherwise in furtherance of the purposes of the Act. If the Commission takes such action, the Commission shall institute proceedings to determine whether the proposed rule should be approved or disapproved.

IV. Solicitation of Comments

Interested persons are invited to submit written data, views, and arguments concerning the foregoing, including whether the proposed rule change is consistent with the Act. Comments may be submitted by any of the following methods:

Electronic Comments

- Use the Commission's Internet comment form (*http://www.sec.gov/rules/sro.shtml);* or
- Send an email to *rule-comments@sec.gov.* Please include File Number SR-Nasdaq 2016–160 on the subject line.

Paper Comments

- Send paper comments in triplicate to Secretary, Securities and Exchange Commission, 100 F Street NE., Washington, DC 20549–1090.

All submissions should refer to File Number SR–Nasdaq–2016–160. This file number should be included on the subject line if email is used.

To help the Commission process and review your comments more efficiently, please use only one method. The Commission will post all comments on the Commission's Internet Web site (*http://www.sec.gov/rules/sro.shtml*).

Copies of the submission, all subsequent amendments, all written statements with respect to the proposed rule change that are filed with the Commission, and all written communications relating to the proposed rule change between the Commission and any person, other than those that may be withheld from the public in accordance with the provisions of 5 U.S.C. 552, will be available for Web site viewing and printing in the Commission's Public Reference Room, 100 F Street NE., Washington, DC 20549, on official business days between the hours of 10:00 a.m. and 3:00 p.m. Copies of the filing also will be available for inspection and copying at the principal office of the Exchange. All comments received will be posted without change; the Commission does not edit personal identifying information from submissions. You should submit only information that you wish to make available publicly.

All submissions should refer to File Number SR–Nasdaq–2016–160 and should be submitted on or before December 27, 2016.

[6] The replacement issues will be announced to the Exchange's membership via an Options Trader Alert (OTA) posted on the Exchange's Web site. Penny Pilot replacement issues will be selected based on trading activity in the previous six months, as is the case today. The replacement issues would be identified based on The Options Clearing Corporation's trading volume data. For example, for the January replacement, trading volume from May 30, 2016 through November 30, 2016 would be analyzed. The month immediately preceding the replacement issues' addition to the Pilot Program (*i.e.,* December) would not be used for purposes of the six-month analysis.

[7] 15 U.S.C. 78f(b).

[8] 15 U.S.C. 78f(b)(5).

[9] 15 U.S.C. 78s(b)(3)(A)(iii).

[10] 17 CFR 240.19b–4(f)(6). In addition, Rule 19b–4(f)(6) requires a self-regulatory organization to give the Commission written notice of its intent to file the proposed rule change at least five business days prior to the date of filing of the proposed rule change, or such shorter time as designated by the Commission. The Exchange has satisfied this requirement.

For the Commission, by the Division of Trading and Markets, pursuant to delegated authority.[11]

Eduardo A. Aleman,

Assistant Secretary.

[FR Doc. 2016–29162 Filed 12–5–16; 8:45 am]

BILLING CODE 8011–01–P

[11] 17 CFR 200.30–3(a)(12).

DEPARTMENT OF STATE

[Public Notice 9810]

Secretary of State's Determination Under the International Religious Freedom Act of 1998

Summary: The Secretary of State's designation of ''countries of particular concern'' for religious freedom violations. Pursuant to Section 408(a) of the International Religious Freedom Act of 1998 (Pub. L. 105–292), as amended (the Act), notice is hereby given that, on October 31, 2016, the Secretary of State, under authority delegated by the President, has designated each of the following as a ''country of particular concern'' (CPC) under section 402(b) of the Act, for having engaged in or tolerated particularly severe violations of religious freedom: Burma, China, Eritrea, Iran, the Democratic People's Republic of Korea, Saudi Arabia, Sudan, Tajikistan, Turkmenistan, and Uzbekistan. The Secretary simultaneously designated the following Presidential Actions for these CPCs:

For Burma, the existing ongoing restrictions referenced in 22 CFR 126.1, pursuant to section 402(c)(5) of the Act;

For China, the existing ongoing restriction on exports to China of crime control and detection instruments and equipment, under the Foreign Relations Authorization Act of 1990 and 1991 (Pub. L. 101–246), pursuant to section 402(c)(5) of the Act;

For Eritrea, the existing ongoing restrictions referenced in 22 CFR 126.1, pursuant to section 402(c)(5) of the Act;

For Iran, the existing ongoing travel restrictions in section 221(c) of the Iran Threat Reduction and Syria Human Rights Act of 2012 (TRA) for individuals identified under section 221(a)(1)(C) of the TRA in connection with the commission of serious human rights abuses, pursuant to section 402(c)(5) of the Act;

For the Democratic People's Republic of Korea, the existing ongoing restrictions to which the Democratic People's Republic of Korea is subject, pursuant to sections 402 and 409 of the Trade Act of 1974 (the Jackson-Vanik Amendment), pursuant to section 402(c)(5) of the Act;

For Saudi Arabia, a waiver as required in the ''important national interest of the United States,'' pursuant to section 407 of the Act;

For Sudan, the restriction in the annual Department of State, Foreign Operations, and Related Programs Appropriations Act on making certain appropriated funds available for assistance to the Government of Sudan, currently set forth in section 7042(j) of the Department of State, Foreign Operations, and Related Programs Appropriations Act, 2015 (Div. K, Pub. L. 114–113), and any provision of law that is the same or substantially the same as this provision, pursuant to section 402(c)(5) of the Act;

For Tajikistan, a waiver as required in the ''important national interest of the United States,'' pursuant to section 407 of the Act;

For Turkmenistan, a waiver as required in the ''important national interest of the United States,'' pursuant to section 407 of the Act;

For Uzbekistan, a waiver as required in the ''important national interest of the United States,'' pursuant to section 407 of the Act.

For Further Information Contact: Benjamin W. Medina, Office of International Religious Freedom, Bureau of Democracy, Human Rights, and Labor, U.S. Department of State, (Phone: (202) 647 3865 or Email: *MedinaBW@state.gov*).

Dated: November 30, 2016.

Daniel L. Nadel,

Director, Office of International Religious Freedom, Department of State.

[FR Doc. 2016–29171 Filed 12–5–16; 8:45 am]

BILLING CODE 4710–18–P

SURFACE TRANSPORTATION BOARD

[Docket No. AB 1240X]

Southwest Pennsylvania Railroad Company—Abandonment Exemption—in Fayette County, Pa.

Southwest Pennsylvania Railroad Company (SWP) has filed a verified notice of exemption under 49 CFR part 1152 subpart F—*Exempt Abandonments* to abandon .3 miles of rail line between milepost 7 in Uniontown to the end of the line in South Union Township (SUT), in Fayette County, Pa. (the Line). The Line traverses U.S. Postal Service Zip Code 15401.

SWP states it plans to abandon the Line and convert the property to trail use.[1] The proposed transaction may not be consummated until January 5, 2017.

SWP has certified that: (1) No local traffic has moved over the Line for at least two years; (2) there is no overhead traffic on the Line; (3) no formal complaint filed by a user of rail service on the Line (or by a state or local government entity acting on behalf of such user) regarding cessation of service over the Line either is pending with the Surface Transportation Board (Board) or with any U.S. District Court or has been decided in favor of complainant within the two-year period; and (4) the requirements at 49 CFR 1105.7(c) and 1105.8(c) (environmental and historic report), 49 CFR 1105.11 (transmittal letter), 49 CFR 1105.12 (newspaper publication), and 49 CFR 1152.50(d)(1) (notice to governmental agencies) have been met.

As a condition to this exemption, any employee adversely affected by the abandonment shall be protected under *Oregon Short Line Railroad—Abandonment Portion Goshen Branch Between Firth & Ammon, in Bingham & Bonneville Counties, Idaho,* 360 I.C.C. 91 (1979). To address whether this condition adequately protects affected employees, a petition for partial revocation under 49 U.S.C. 10502(d) must be filed.

Provided no formal expression of intent to file an offer of financial assistance (OFA) has been received, this exemption will become effective on January 5, 2017, unless stayed pending reconsideration. Petitions to stay that do not involve environmental issues,[2] formal expressions of intent to file an OFA under 49 CFR 1152.27(c)(2),[3] and interim trail use/rail banking requests under 49 CFR 1152.29 must be filed by December 16, 2016. Petitions to reopen or requests for public use conditions under 49 CFR 1152.28 must be filed by December 27, 2016, with the Surface Transportation Board, 395 E Street SW., Washington, DC 20423–0001.

A copy of any petition filed with the Board should be sent to SWP's representative: Richard R. Wilson, P.C.,

[1] SWP states it has agreed to lease the line to SUT pursuant to the National Trails System Act, 16 U.S.C. 1247(d), upon the Board imposing a decision and notice of interim trail use or abandonment.

[2] The Board will grant a stay if an informed decision on environmental issues (whether raised by a party or by the Board's Office of Environmental Analysis (OEA) in its independent investigation) cannot be made before the exemption's effective date. *See Exemption of Out-of-Serv. Rail Lines,* 5 I.C.C.2d 377 (1989). Any request for a stay should be filed as soon as possible so that the Board may take appropriate action before the exemption's effective date.

[3] Each OFA must be accompanied by the filing fee, which is currently set at $1,700. *See Regulations Governing Fees for Servs. Performed in Connection with Licensing & Related Servs.—2016 Update,* EP 542 (Sub-No. 24) (STB served Aug. 2, 2016).

518 N. Center St., Suite 1, Ebensburg, PA 15931.

If the verified notice contains false or misleading information, the exemption is void ab initio.

SWP has filed a combined environmental and historic report that addresses the effects, if any, of the abandonment on the environment and historic resources. OEA will issue an environmental assessment (EA) by December 9, 2016. Interested persons may obtain a copy of the EA by writing to OEA (Room 1100, Surface Transportation Board, Washington, DC 20423–0001) or by calling OEA at (202) 245–0305. Assistance for the hearing impaired is available through the Federal Information Relay Service at (800) 877–8339. Comments on environmental and historic preservation matters must be filed within 15 days after the EA becomes available to the public.

Environmental, historic preservation, public use, or interim trail use/rail banking conditions will be imposed, where appropriate, in a subsequent decision.

Pursuant to the provisions of 49 CFR 1152.29(e)(2), SWP shall file a notice of consummation with the Board to signify that it has exercised the authority granted and fully abandoned the Line. If consummation has not been effected by SWP's filing of a notice of consummation by December 6, 2017, and there are no legal or regulatory barriers to consummation, the authority to abandon will automatically expire.

Board decisions and notices are available on our Web site at ''*WWW.STB.GOV*.''

Decided: November 30, 2016.

By the Board, Rachel D. Campbell, Director, Office of Proceedings.

Jeffrey Herzig,

Clearance Clerk.

[FR Doc. 2016–29241 Filed 12–5–16; 8:45 am]

BILLING CODE 4915–01–P

DEPARTMENT OF TRANSPORTATION

Federal Aviation Administration

Public Notice for Waiver of Aeronautical Land-Use Assurance

AGENCY: Federal Aviation Administration (FAA), DOT.

ACTION: Notice of intent of waiver with respect to land; Indianapolis International Airport, Indianapolis, Indiana.

SUMMARY: The Federal Aviation Administration (FAA) is considering a proposal to change a portion of the airport from aeronautical use to non-aeronautical use and to authorize the release of 16.975 acres of airport property for non-aeronautical development. The land consists of fifty-four (54) original airport acquired parcels. These parcels were acquired under grants: 3–18–0038–24, 3–18–0038–38, 3–18–0038–39, 3–18–0038–41, 3–18–0038–43, 3–18–0038–45, 3–18–0038–47, 3–18–0038–54 or without federal participation. The future use of the property is for commercial and industrial development.

There are no impacts to the airport by allowing the Indianapolis Airport Authority to dispose of the property.

The land is not needed for aeronautical use. Approval does not constitute a commitment by the FAA to financially assist in the sale or lease of the subject airport property nor a determination of eligibility for grant-in-aid funding from the FAA.

In accordance with section 47107(h) of Title 49, United States Code, this notice is required to be published in the **Federal Register** 30 days before modifying the land-use assurance that requires the property to be used for an aeronautical purpose.

DATES: Comments must be received on or before January 5, 2017.

ADDRESSES: Documents are available for review by appointment at the FAA Chicago Airports District Office, Melanie Myers, Program Manager, 2300 East Devon Avenue, Des Plaines, IL 60018, Telephone: (847) 294–7525/Fax: (847) 294–7046 and Eric Anderson, Indianapolis Airport Authority, 7800 Col. H. Weir Cook Memorial Drive, Indianapolis, IN 46241; (317) 487–5135.

Written comments on the Sponsor's request must be delivered or mailed to: Melanie Myers, Program Manager, Federal Aviation Administration, Chicago Airports District Office, 2300 East Devon Avenue, Des Plaines, IL 60018, Telephone Number: (847) 294–7525/FAX Number: (847) 294–7046.

FOR FURTHER INFORMATION CONTACT: Melanie Myers, Program Manager, Federal Aviation Administration, Chicago Airports District Office, 2300 East Devon Avenue, Des Plaines, IL 60018, Telephone Number: (847) 294–7525/FAX Number: (847) 294–7046.

SUPPLEMENTARY INFORMATION:

Tract 1

Part of the Northwest Quarter of Section 13, Township 15 North, Range 2 East in Marion County, Indiana including Lots numbered 175, 176, 177, 178, 179, 180, 181, 182, 201, 202, 203, 204, 205, 206, 207, 208, 209, 210, 211, 212, 213, 214, 215, 216, 217, 218, 219, and 220 and parts of Lots Numbered 168, 169, 170, 171, 172, 173, 174, and 221, part of Fruitdale Avenue, part of the first and second North-South alleys East of High School Road, part of the East-West alley along the North right of way line of the CSX Railroad, and part of the alley located across the Southwest corner of Lot 174 in Arthur V. Brown's Second Section Western Heights, an Addition to the City of Indianapolis, as per plat thereof recorded in Plat Book 15, page 152, in the Office of the Recorder of Marion County, Indiana, the perimeter of which is more particularly described as follows:

Commencing at the Southwest corner (IAA Monument 13–0) of the Northwest Quarter of Section 13, Township 15 North Range 2 East; thence North 00 degrees 05 minutes 40 seconds East (all bearings are based on the Indiana State Plane Coordinate system, East Zone (NAD83)) along the West line of said Northwest Quarter 723.22 feet to the Northwest corner of land described in Instrument No. 98–13698, recorded in said recorder's office; thence North 89 degrees 07 minutes 34 seconds East along the North line of said described land 35.00 feet to the POINT OF BEGINNING; thence continuing North 89 degrees 07 minutes 34 seconds East along said North line and the North line of land described in Instrument No. 95–59918, recorded in said recorder's office 425.00 feet to the East right-of-way line of Fruitdale Avenue; thence North 00 degrees 05 minutes 40 seconds East along said right-of-way line 75.78 feet to the Northwest corner of said Lot 201; thence North 89 degrees 07 minutes 34 seconds East along the North line of said lot and the Easterly extension thereof 214.00 feet to the East line of a 14 foot alley and the Southwest corner of said Lot 220; thence North 00 degrees 05 minutes 40 seconds East along said East line 120.00 feet to the Northwest corner of said Lot 221; thence North 89 degrees 07 minutes 34 seconds East along the North line of said Lot 221 a distance of 50.00 feet to the Northeast corner of land described in Instrument No. 1997–0051847, recorded in said Recorder's Office; thence South 00 degrees 05 minutes 40 seconds West along the East line of said described land 50.00 feet to the Southeast corner thereof and the North line of said Lot 220; thence North 89 degrees 07 minutes 34 seconds East along said North line 150.00 feet to the West right of way line of Vinewood Avenue; thence South 00 degrees 05 minutes 40 seconds West along said West right of way line 621.64 feet to the North right of way line of the CSX Railroad: Thence South 72 degrees 46

minutes 12 seconds West along said North right of way line 809.84 feet to the centerline of a 14 foot alley; thence North 23 degrees 34 minutes 07 seconds West along said centerline 76.70 feet; thence North 00 degrees 05 minutes 40 seconds East 107.86 feet; thence North 15 degrees 58 minutes 15 seconds West 72.27 feet to the East right of way line of High School Road (the following five courses are along said East right of way line): (1) Thence North 00 degrees 05 minutes 40 seconds East 187.65 feet; (2) thence North 04 degrees 40 minutes 33 seconds West 120.25 feet; (3) thence North 00 degrees 05 minutes 40 seconds East 60.00 feet; (4) thence South 89 degrees 07 minutes 34 seconds West 5.00 feet; (5) thence North 00 degrees 05 minutes 40 seconds East 97.89 feet to the POINT OF BEGINNING, containing 12.482 acres, more or less.

Subject to all legal easements, rights of way, and restrictions of record.

Tract 2

Lot Numbered 199 in Arthur V. Browns' Second Section Western Heights, an Addition to the City of Indianapolis, as per plat thereof recorded in Plat Book 15, page 152 in the Office of the Recorder of Marion County, Indiana, containing 0.275 acre, more or less.

Subject to all legal easements, rights of way, and restrictions of record.

Tract 3

Lots Numbered 241, 242, 243, 244, 245, 246, 247, 248, 249, and 250 in Arthur V. Brown's Second Section Western Heights, an Addition to the City of Indianapolis, as per plat thereof recorded in Plat Book 15, page 152, in the Office of the Recorder of Marion County, Indiana, containing 2.872 acres, more or less.

Tract 4

Parts of Lots 253, 254, 255, 256, 257, 258, and 259 in Arthur V. Brown's Second Section Western Heights, on Addition to the City of Indianapolis, as per plat thereof recorded in Plat Book 15, page 152 in the Office of the Recorder of Marion County, Indiana, the perimeter of which is more particularly described as follows:

BEGINNING at the Northwest corner of said Lot 259; thence North 89 degrees 07 minutes 34 seconds East along the North line of said lot 140.18 feet to the West right of way line of Interstate 465 per INDOT plans for Project No. IM–465–4(355); thence South 00 degrees 14 minutes 24 seconds West along said West right of way line 420.02 feet to the South lien of said Lot 253; thence South 89 degrees 07 minutes 34 seconds West along said South lien 139.11 feet to the Southwest corner thereof and the East line of a 14 foot alley; thence North 00 degrees 05 minutes 40 seconds East along said East line 420.000 feet to the POINT OF BEGINNING, containing 1.346 acres, more or less.

Subject to all legal easements, rights of way, and restrictions of record.

Issued in Des Plaines, Illinois, on November 16, 2016.

James G. Keefer,

Manager, Chicago Airports District Office FAA, Great Lakes Region.

[FR Doc. 2016–29232 Filed 12–5–16; 8:45 am]

BILLING CODE 4910–13–P

DEPARTMENT OF TRANSPORTATION

Federal Aviation Administration

Aviation Rulemaking Advisory Committee; Meeting

AGENCY: Federal Aviation Administration (FAA), DOT.

ACTION: Notice of Aviation Rulemaking Advisory Committee (ARAC) meeting.

SUMMARY: The FAA is issuing this notice to advise the public of a meeting of the ARAC.

DATES: The meeting will be held on December 15, 2016, starting at 1:00 p.m. Eastern Standard Time. Arrange oral presentations by December 08, 2016.

ADDRESSES: The meeting will take place at the Federal Aviation Administration, 800 Independence Avenue SW., Washington, DC 20591, 10th floor, MacCracken Conference Room.

FOR FURTHER INFORMATION CONTACT: Nikeita Johnson, Federal Aviation Administration, 800 Independence Avenue SW., Washington, DC 20591, telephone (202) 267- 4977; fax (202) 267–5075; email *Nikeita.Johnson@faa.gov.*

SUPPLEMENTARY INFORMATION: Pursuant to Section 10(a)(2) of the Federal Advisory Committee Act (5 U.S.C. App. 2), we are giving notice of a meeting of the ARAC taking place on December 15, 2016, at the Federal Aviation Administration, 800 Independence Avenue SW., Washington, DC 20591.

The Agenda includes:

1. Recommendation Report
   a. Rotorcraft Occupant Protection Working Group
2. Status Reports From Active Working Groups
   a. ARAC
   i. Air Traffic Controller Training Working Group
   ii. Aircraft Systems Information Security/Protection Working Group
   iii. Rotorcraft Bird Strike Working Group
   iv. Load Master Certification Working Group
   v. Airman Certification Systems Working Group
   b. Transport Airplane and Engine (TAE) Subcommittee
   i. Transport Airplane Metallic and Composite Structures Working Group—Transport Airplane Damage-Tolerance and Fatigue Evaluation
   ii. Flight Test Harmonization Working Group—Phase 2 Tasking
   iii. Transport Airplane Crashworthiness and Ditching Evaluation Working Group
   iv. Engine Harmonization Working Group—Engine Endurance Testing Requirements—Revision of Section 33.87
   v. Airworthiness Assurance Working Group
3. Status Report from the FAA

Attendance is open to the interested public but limited to the space available. Please confirm your attendance with the person listed in the **FOR FURTHER INFORMATION CONTACT** section no later than December 08, 2016. Please provide the following information: full legal name, country of citizenship, and name of your industry association, or applicable affiliation. If you are attending as a public citizen, please indicate so.

For persons participating by telephone, please contact the person listed in the **FOR FURTHER INFORMATION CONTACT** section by email or phone for the teleconference call-in number and passcode. Callers are responsible for paying long-distance charges.

The public must arrange by December 08, 2016 to present oral statements at the meeting. The public may present written statements to the Aviation Rulemaking Advisory Committee by providing 25 copies to the Designated Federal Officer, or by bringing the copies to the meeting.

If you are in need of assistance or require a reasonable accommodation for this meeting, please contact the person listed under the heading **FOR FURTHER INFORMATION CONTACT**. Sign and oral interpretation, as well as a listening device, can be made available if requested 10 calendar days before the meeting.

Issued in Washington, DC, on November 28, 2016.

Lirio Liu,

Designated Federal Officer, Aviation Rulemaking Advisory Committee.

[FR Doc. 2016–29136 Filed 12–5–16; 8:45 am]

BILLING CODE 4910–13–P

DEPARTMENT OF TRANSPORTATION

Federal Aviation Administration

Aviation Rulemaking Advisory Committee; Meeting

AGENCY: Federal Aviation Administration (FAA), DOT.

ACTION: Notice of Aviation Rulemaking Advisory Committee (ARAC) meeting.

SUMMARY: The FAA is issuing this notice to advise the public of a meeting of the ARAC.

DATES: The meeting will be held on December 15, 2016, starting at 1:00 p.m. Eastern Standard Time. Arrange oral presentations by December 08, 2016.

ADDRESSES: The meeting will take place at the Federal Aviation Administration, 800 Independence Avenue SW., Washington, DC 20591, 10th Floor, MacCracken Conference Room.

FOR FURTHER INFORMATION CONTACT: Nikeita Johnson, Federal Aviation Administration, 800 Independence Avenue SW., Washington, DC 20591, telephone (202) 267–4977; fax (202) 267–5075; email *Nikeita.Johnson@faa.gov.*

SUPPLEMENTARY INFORMATION: Pursuant to Section 10(a)(2) of the Federal Advisory Committee Act (5 U.S.C. App. 2), we are giving notice of a meeting of the ARAC taking place on December 15, 2016, at the Federal Aviation Administration, 800 Independence Avenue SW., Washington, DC 20591.

The Agenda includes:

1. Recommendation Report
   a. Rotorcraft Occupant Protection Working Group
2. Status Reports From Active Working Groups
   a. ARAC
   i. Air Traffic Controller Training Working Group
   ii. Aircraft Systems Information Security/Protection Working Group
   iii. Rotorcraft Bird Strike Working Group
   iv. Load Master Certification Working Group
   v. Airman Certification Systems Working Group
   b. Transport Airplane and Engine (TAE) Subcommittee
   i. Transport Airplane Metallic and Composite Structures Working Group—Transport Airplane Damage-Tolerance and Fatigue Evaluation
   ii. Flight Test Harmonization Working Group—Phase 2 Tasking
   iii. Transport Airplane Crashworthiness and Ditching Evaluation Working Group
   iv. Engine Harmonization Working Group-Engine Endurance Testing Requirements—Revision of Section 33.87
   v. Airworthiness Assurance Working Group
3. Status Report from the FAA

Attendance is open to the interested public but limited to the space available. Please confirm your attendance with the person listed in the **FOR FURTHER INFORMATION CONTACT** section no later than December 08, 2016. Please provide the following information: Full legal name, country of citizenship, and name of your industry association, or applicable affiliation. If you are attending as a public citizen, please indicate so.

For persons participating by telephone, please contact the person listed in the **FOR FURTHER INFORMATION CONTACT** section by email or phone for the teleconference call-in number and passcode. Callers are responsible for paying long-distance charges.

The public must arrange by December 08, 2016 to present oral statements at the meeting. The public may present written statements to the Aviation Rulemaking Advisory Committee by providing 25 copies to the Designated Federal Officer, or by bringing the copies to the meeting.

If you are in need of assistance or require a reasonable accommodation for this meeting, please contact the person listed under the heading **FOR FURTHER INFORMATION CONTACT**. Sign and oral interpretation, as well as a listening device, can be made available if requested 10 calendar days before the meeting.

Issued in Washington, DC, on December 1, 2016.

Dale A. Bouffiou,

Acting Designated Federal Officer, Aviation Rulemaking Advisory Committee.

[FR Doc. 2016–29239 Filed 12–1–16; 4:15 pm]

BILLING CODE 4910–13–P

DEPARTMENT OF TRANSPORTATION

Federal Aviation Administration

Noise Exposure Map Notice for Lehigh Valley International Airport, Allentown, Pennsylvania

AGENCY: Federal Aviation Administration, DOT

ACTION: Notice.

SUMMARY: The Federal Aviation Administration (FAA) announces its determination that the noise exposure maps submitted by the Lehigh-Northampton Airport Authority for Lehigh Valley International Airport under the provisions of 49 U.S.C. 47501 *et. seq* (Aviation Safety and Noise Abatement Act) and 14 CFR part 150 are in compliance with applicable requirements.

DATES: *Effective Date:* The effective date of the FAA's determination on the noise exposure maps is November 28, 2016.

FOR FURTHER INFORMATION CONTACT: Harrisburg Airports District Office (HAR ADO), Susan L. McDonald, Environmental Protection Specialist, Federal Aviation Administration, HAR ADO, 3905 Hartzdale Drive, Suite 508, Camp Hill, PA 17011, Telephone: (717) 730–2830.

SUPPLEMENTARY INFORMATION: This notice announces that the FAA finds that the noise exposure maps submitted for Lehigh Valley International Airport are in compliance with applicable requirements of 14 CFR 150 (part 150), effective January 13, 2004. Under 49 U.S.C. Section 47503 of the Aviation Safety and Noise Abatement Act (hereinafter referred to as ''the Act''), an airport operator may submit to the FAA noise exposure maps which meet applicable regulations and which depict non-compatible land uses as of the date of submission of such maps; a description of estimated aircraft operations during a forecast period that is at least five (5) years in the future; and the ways in which such operations will affect such maps. The Act requires such maps to be developed in consultation with interested and affected parties in the local community, government agencies, planning authorities, and persons using the airport. An airport operator that has submitted noise exposure maps that are found by FAA to be in compliance with the requirements of Federal Aviation Regulations (FAR) Part 150, promulgated pursuant to the Act, may submit a noise compatibility program for FAA approval, which sets forth the measures the operator has taken or proposes to take to reduce existing non-compatible uses and prevent the introduction of additional non-compatible uses.

The FAA has completed its review of the noise exposure maps and accompanying documentation submitted by Lehigh-Northampton Airport Authority. The documentation that constitutes the ''Noise Exposure Maps'' (NEM) as defined in Section 150.7 of Part 150 includes 2015 Base Year NEM, Figure 4–5; and 2020 Future Year NEM, Figure 5–1. The Noise Exposure Maps contain current and forecast information, including the depiction of the airport and its

boundaries; the runway configurations; land uses such as residential, open space, commercial/retail, community facilities, libraries, churches, and warehouses; and those areas within the Day Night Average Sound Level (DNL) 65, 70 and 75 noise contours. Estimates for the area within these contours for the 2015 Base Year are shown in Table 4–8 and Table 4–9, and in Chapter 4 of the NEM. Estimates of the residential population within the 2020 Future Year noise contours are shown in Table 5–5, and in Chapter 5 of the NEM. Figure 3–1, in Chapter 3, displays the location of noise monitoring sites. Flight tracks are found in Chapter 4, and detailed in Appedix C. The type and frequency of aircraft operations (including nighttime operations) are found in Chapter 4, Tables 4–5 and 4–6. The FAA has determined that these noise exposure maps and accompanying documentation are in compliance with applicable requirements. This determination is effective on November 28, 2016.

FAA's determination on an airport operator's noise exposure maps is limited to a finding that the maps were developed in accordance with the procedures contained in Appendix A of FAR Part 150. Such determination does not constitute approval of the applicant's data, information or plans, or a commitment to approve a noise compatibility program or to fund the implementation of that program. If questions arise concerning the precise relationship of specific properties to noise exposure contours depicted on a noise exposure map submitted under Section 47503 of the Act, it should be noted that the FAA is not involved in any way in determining the relative locations of specific properties with regard to the depicted noise contours, or in interpreting the noise exposure maps to resolve questions concerning, for example, which properties should be covered by the provisions of Section 47506 of the Act. These functions are inseparable from the ultimate land use control and planning responsibilities of local government. These local responsibilities are not changed in any way under Part 150 or through the FAA's review of noise exposure maps. Therefore, the responsibility for the detailed overlaying of noise exposure contours onto the map depicting properties on the surface rests exclusively with the airport operator that submitted those maps, or with those public agencies and planning agencies with which consultation is required under Section 47503 of the Act. The FAA has relied on the certification by the airport operator, under Section 150.21 of FAR Part 150, that the statutorily required consultation has been accomplished.

Copies of the full noise exposure map documentation and of the FAA's evaluation of the maps are available for examination at the following locations:

Federal Aviation Administration, Eastern Region, Airports Division, AEA–600, 1 Aviation Plaza, Jamaica, New York 11434.

Federal Aviation Administration, Harrisburg Airports District Office, 3905 Hartzdale Drive, Suite 508, Camp Hill, PA 17011.

Charles R. Everett, Executive Director, Lehigh Valley International Airport, Lehigh Northamption Aiport Authority, 3311 Airport Road, Allentown, PA 18109–3040.

FOR FURTHER INFORMATION CONTACT: Harrisburg Airports District Office (HAR ADO), Susan L. McDonald, Environmental Protection Specialist, Federal Aviation Administration, HAR ADO, 3905 Hartzdale Drive, Suite 508, Camp Hill, PA 17011, Telephone: (717) 730–2830.

Issued in Camp Hill, PA on November 21, 2016.

Lori K. Pagnanelli,

Manager, Harrisburg Airports District Office, Eastern Region.

[FR Doc. 2016–29145 Filed 12–5–16; 8:45 am]

BILLING CODE 4910–13–P

DEPARTMENT OF TRANSPORTATION

Federal Railroad Administration

[Docket No. FRA–2014–0011–N–02]

Proposed Agency Information Collection Activities; Comment Request

AGENCY: Federal Railroad Administration (FRA), Department of Transportation (DOT).

ACTION: Notice.

SUMMARY: FRA is seeking public comments on its proposal to renew its Paperwork Reduction Act (PRA) clearance to participate in the Office of Management and Budget (OMB) program, ''Generic Clearance for the Collection of Qualitative Feedback on Agency Service Delivery'' (OMB program). FRA will submit the information collection requirements described below to OMB for review, as required by the PRA. The OMB program was created to facilitate Federal agencies' efforts to streamline the process to seek public feedback on service delivery. Current FRA clearance under the OMB program expires May 31, 2017.

DATES: Comments must be received no later than February 6, 2017.

ADDRESSES: Submit written comments on any or all of the following proposed activities by mail to Ms. Kimberly Toone, Office of Information Technology, RAD–20, Federal Railroad Administration, 1200 New Jersey Ave. SE., Mail Stop 35, Washington, DC 20590. Commenters requesting FRA to acknowledge receipt of their respective comments must include a self-addressed stamped postcard stating, ''Comments on OMB control number 2130–0593.'' Alternatively, comments may be transmitted via facsimile to (202) 493–6497, or via email to Ms. Toone at *Kim.Toone@dot.gov.* Please refer to the assigned OMB control number in any correspondence submitted. FRA will summarize comments received in response to this notice in a subsequent notice and include them in its information collection submission to OMB for approval.

FOR FURTHER INFORMATION CONTACT: Ms. Kimberly Toone, Office of Information Technology, RAD–20, Federal Railroad Administration, 1200 New Jersey Ave. SE., Mail Stop 35, Washington, DC 20590 (telephone: (202) 493–6132). (These telephone numbers are not toll-free.)

SUPPLEMENTARY INFORMATION: Executive Order 12862 (1993) (Setting Customer Service Standards) directed all Federal executive departments and agencies and requested independent Federal agencies to provide service to ''customers'' that matches or exceeds the best service available in the private sector. *See also* Executive Order 13571 (2011) (Streamlining Service Delivery and Improving Customer Service). For purposes of these orders, ''customer'' means an individual who or entity that is directly served by a Federal department or agency. FRA seeks renewed OMB approval of a generic clearance to collect qualitative feedback on our service delivery (*i.e.,* the products and services that FRA creates to help consumers and businesses understand their rights and responsibilities, including Web sites, blogs, videos, print publications, and other content).

Below is a brief summary of the information collection activity FRA will submit to OMB for clearance as required under the PRA:

Title: Generic Clearance for the Collection of Qualitative Feedback on Agency Service Delivery OMB Control Number: 2130–0593.

Status: Regular Review.

Type of Request: Extension without change of a previously approved collection.

Abstract: This collection of information is necessary to enable the FRA to garner customer and stakeholder feedback in an efficient, timely manner, consistent with our commitment to improving service delivery. The information collected from our customers and stakeholders will help ensure users have an effective, efficient, and satisfying experience with FRA's programs. This feedback will provide insights into customer or stakeholder perceptions, experiences and expectations, provide an early warning of issues with service, and focus attention on areas where communication, training or changes in operations might improve delivery of products or services. These collections will allow ongoing, collaborative, and actionable communications between FRA and its customers and stakeholders. It also allows feedback to contribute directly to the improvement of program management.

Improving FRA's programs requires ongoing assessment of service delivery, meaning a systematic review of the operation of a program compared to a set of explicit or implicit standards as a means of contributing to the continuous improvement of the program. FRA will collect, analyze, and interpret information gathered through this generic clearance to identify strengths and weaknesses of current services and make improvements in service delivery based on feedback. The solicitation of feedback will target areas such as: Timeliness, appropriateness, accuracy of information, courtesy, efficiency of service delivery, and resolution of issues with service delivery. FRA will assess responses to plan and inform efforts to improve or maintain the quality of service offered to the public. If this information is not collected, vital feedback from customers and stakeholders on the FRA's services will be unavailable.

FRA will only submit a collection for approval under this generic clearance if it meets the following conditions:

- FRA will only use the information gathered internally for general service improvement and program management purposes and does not intend to release it outside FRA;
- FRA will not use information gathered to substantially inform influential policy decisions;
- Information gathered will yield qualitative information; FRA will not design the collections or expect them to yield statistically reliable results or use them as though the results are generalizable to the population of study;
- Participation in the collections is voluntary;
- The collections are low-burden for respondents (based on considerations of total burden hours, total number of respondents, or burden-hours per respondent) and are low-cost for both the respondents and the Federal Government;
- The collections are non-controversial and do not raise issues of concern to other Federal agencies;
- Any collection is targeted to the solicitation of opinions from respondents who have experience with the OMB program or may have experience with the OMB program in the near future; and
- With the exception of information needed to provide renumeration for participants of focus groups and cognitive laboratory studies, FRA will collect personally identifiable information (PII) only to the extent necessary and will not retain it.

Affected Public: Individuals and Households, Business and Organizations, State, Local or Tribal Governments.

Frequency of Submission: Once per request.

Total Annual Number of Respondents: 2,100.

Total Estimated Responses: 2,100.

Average Minutes per Response: 10 minutes.

Total Annual Burden Hours: 354 hours.

Authority: 44 U.S.C. 3501–3520.

Issued in Washington, DC, on November 30, 2016.

Patrick Warren,

Acting Executive Director.

[FR Doc. 2016–29237 Filed 12–5–16; 8:45 am]

BILLING CODE 4910–06–P

DEPARTMENT OF THE TREASURY

Submission for OMB Review; Comment Request

AGENCY: Department of the Treasury.

ACTION: Notice.

SUMMARY: The Department of the Treasury will submit the following information collection requests to the Office of Management and Budget (OMB) for review and clearance in accordance with the Paperwork Reduction Act of 1995, Public Law 104–13, on or after the date of publication of this notice.

DATES: Comments should be received on or before January 5, 2017 to be assured of consideration.

ADDRESSES: Send comments regarding the burden estimates, or any other aspect of the information collections, including suggestions for reducing the burden, to (1) Office of Information and Regulatory Affairs, Office of Management and Budget, Attention: Desk Officer for Treasury, New Executive Office Building, Room 10235, Washington, DC 20503, or email at *OIRA_Submission@OMB.EOP.gov* and (2) Treasury PRA Clearance Officer, 1750 Pennsylvania Ave. NW., Suite 8142, Washington, DC 20220, or email at *PRA@treasury.gov.*

FOR FURTHER INFORMATION CONTACT: Copies of the submissions may be obtained by emailing *PRA@treasury.gov,* calling (202) 622–0934, or viewing the entire information collection request at *www.reginfo.gov.*

SUPPLEMENTARY INFORMATION:

Internal Revenue Service (IRS)

OMB Control Number: 1545–0732.

Type of Review: Extension without change of a currently approved collection.

Title: Credit for Increasing Research Activity (TD 8251).

Abstract: This regulation provides rules for the credit for increasing research activities. Internal Revenue Code section 41(f) provides that commonly controlled groups of taxpayers shall compute the credit as if they are single taxpayer. The credit allowed to a member of the group is a portion of the group's credit. Section 1.41–8(d) of the regulation permits a corporation that is a member of more than one group to designate which controlled group they will be aggregated with the purposes of Code section 41(f).

Affected Public: Businesses or other for-profits.

Estimated Total Annual Burden Hours: 63.

OMB Control Number: 1545–0232.

Type of Review: Extension without change of a currently approved collection.

Title: Information Return of Nontaxable Energy Grants or Subsidized Energy Financing.

Form: 6497.

Abstract: Section 6050D of the Internal Revenue Code requires an information return to be made by any person who administers a Federal, state, or local program providing nontaxable grants or subsidized energy financing. Form 6497 is used for making the information return. The IRS uses the information from the form to ensure that recipients have not claimed tax credits or other benefits with respect to the grants or subsidized financing.

Affected Public: Businesses or other for-profits.

Estimated Total Annual Burden Hours: 810.

OMB Control Number: 1545–1070.

Type of Review: Extension without change of a currently approved collection.

Title: Effectively connected income and the branch profits tax.

Abstract: The regulations explain how to comply with section 884, which imposes a tax on the earnings of a foreign corporation's branch that are removed from the branch and which subjects interest paid by the branch, and certain interest deducted by the foreign corporation to tax.

Affected Public: Businesses or other for-profits.

Estimated Total Annual Burden Hours: 12,694.

OMB Control Number: 1545–0685.

Type of Review: Extension without change of a currently approved collection.

Title: Export Exemption Certificate.

Form: 1363.

Abstract: IRC section 4272(b)(2) excepts exported property from the excise tax on transportation of property. Regulation section 49.4271–1(d)(2) authorizes the filing of Form 1363 by the shipper to request exemption for a shipment, or a series of shipments. The form is filed with the carrier. It is used by IRS as proof of tax exempt status of each shipment.

Affected Public: Businesses or other for-profits.

Estimated Total Annual Burden Hours: 425,000.

Dated: December 1, 2016.

Bob Faber,

Acting Treasury PRA Clearance Officer.

[FR Doc. 2016–29198 Filed 12–5–16; 8:45 am]

BILLING CODE 4830–01–P

DEPARTMENT OF THE TREASURY

Office of the Assistant Secretary for International Affairs; Survey of U.S. Ownership of Foreign Securities as of December 31, 2016

AGENCY: Departmental Offices, Department of the Treasury.

ACTION: Notice of reporting requirements.

SUMMARY: By this Notice and in accordance with 31 CFR 129, the Department of the Treasury is informing the public that it is conducting a mandatory survey of ownership of foreign securities by U.S. residents as of December 31, 2016. This Notice constitutes legal notification to all United States persons (defined below) who meet the reporting requirements set forth in this Notice that they must respond to, and comply with, this survey. The reporting form SHC (2016) and instructions may be printed from the Internet at: *https://www.treasury.gov/resource-center/data-chart-center/tic/Pages/forms-sh.aspx#shc*.

Definition: Pursuant to 22 U.S.C. 3102 a United States person is any individual, branch, partnership, associated group, association, estate, trust, corporation, or other organization (whether or not organized under the laws of any State), and any government (including a foreign government, the United States Government, a State or local government, and any agency, corporation, financial institution, or other entity or instrumentality thereof, including a government-sponsored agency), who resides in the United States or is subject to the jurisdiction of the United States.

Who Must Report: The following U.S. persons must report on this survey:

- U.S. persons who manage, as custodians, the safekeeping of foreign securities for themselves and other U.S. persons. These U.S. persons, who include the affiliates in the United States of foreign entities, must report on this survey if the total fair value of the foreign securities whose safekeeping they manage on behalf of U.S. persons—aggregated over all accounts and for all U.S. branches and affiliates of their firm—is $200 million or more as of the close of business on December 31, 2016.
- U.S. persons who own foreign securities for their own portfolios and/or who invest in foreign securities on behalf of others, such as investment managers/fund sponsors. These U.S. persons (referred to as ''end-investors''), who include the affiliates in the United States of foreign entities, must report on this survey if the total fair value of these foreign securities—aggregated over all accounts and for all U.S. branches and affiliates of their firm—is $200 million or more as of the close of business on December 31, 2016.
- U.S. persons who are notified by letter from the Federal Reserve Bank of New York. These U.S. persons must file Schedule 1, even if the recipient of the letter is under the reporting threshold of $200 million and need only report ''exempt'' on Schedule 1. These U.S. persons who meet the reporting threshold must also file Schedule 2 and/or Schedule 3.

What To Report: This report will collect information on holdings by U.S. residents of foreign securities, including equities, long-term debt securities, and short-term debt securities (including selected money market instruments).

How To Report: Copies of the survey forms and instructions, which contain complete information on reporting procedures and definitions, may be obtained at the Web site address given above in the Summary. Completed reports can be submitted electronically or mailed to the Federal Reserve Bank of New York, Statistics Function, 4th Floor, 33 Liberty Street, New York, NY 10045–0001. Inquiries can be made to the survey staff of the Federal Reserve Bank of New York at (212) 720–6300 or email: *SHC.help@ny.frb.org*. Inquiries can also be made to Dwight Wolkow at (202) 622–1276, email: *comments2TIC@do.treas.gov*.

When To Report: Data must be submitted to the Federal Reserve Bank of New York, acting as fiscal agent for the Department of the Treasury, by March 3, 2017.

Paperwork Reduction Act Notice: This data collection has been approved by the Office of Management and Budget (OMB) in accordance with the Paperwork Reduction Act and assigned control number 1505–0146. An agency may not conduct or sponsor, and a person is not required to respond to, a collection of information unless it displays a valid control number assigned by OMB. The estimated average annual burden associated with this collection of information is 17 hours per respondent for exempt respondents, 41 hours per respondent for end-investors and custodians that file Schedule 3 reports covering their securities entrusted to U.S. resident custodians, 121 hours per respondent for large end-investors filing Schedule 2 reports, and 361 hours per respondent for large custodians of securities filing Schedule 2 reports. Comments concerning the accuracy of this burden estimate and suggestions for reducing this burden should be directed to the Department of the Treasury, Attention Administrator, International Portfolio Investment Data Reporting Systems, Room 5422, Washington, DC 20220, and to OMB, Attention Desk Officer for the Department of the Treasury, Office of Information and Regulatory Affairs, Washington, DC 20503

Dwight Wolkow,

Administrator, International Portfolio Investment Data Reporting Systems.

[FR Doc. 2016–29180 Filed 12–5–16; 8:45 am]

BILLING CODE 4810–25–P

DEPARTMENT OF THE TREASURY

Submission for OMB Review; Comment Request

AGENCY: Department of the Treasury.

ACTION: Notice.

SUMMARY: The Department of the Treasury will submit the following information collection request to the Office of Management and Budget (OMB) for review and clearance in accordance with the Paperwork Reduction Act of 1995, Public Law 104–13, on or after the date of publication of this notice.

DATES: Comments should be received on or before January 5, 2017 to be assured of consideration.

ADDRESSES: Send comments regarding the burden estimate, or any other aspect of the information collection, including suggestions for reducing the burden, to (1) Office of Information and Regulatory Affairs, Office of Management and Budget, Attention: Desk Officer for Treasury, New Executive Office Building, Room 10235, Washington, DC 20503, or email at *OIRA_Submission@OMB.EOP.gov* and (2) Treasury PRA Clearance Officer, 1750 Pennsylvania Ave. NW., Suite 8142, Washington, DC 20220, or email at *PRA@treasury.gov.*

FOR FURTHER INFORMATION CONTACT: Copies of the submission may be obtained by emailing *PRA@treasury.gov,* calling (202) 622–0934, or viewing the entire information collection request at *www.reginfo.gov.*

SUPPLEMENTARY INFORMATION:

Financial Crimes Enforcement Network (FinCEN)

OMB Control Number: 1506–0036.

Type of Review: Extension without change of a currently approved collection.

Title: Imposition of Special Measure Against Commercial Bank of Syria, Including its Subsidiary, Syrian Lebanese Commercial Bank, as a Financial Institution of Primary Money Laundering Concern.

Abstract: This information will be used to verify compliance by financial institutions with the requirements to notify their correspondent account holders.

Affected Public: Businesses or other for-profits.

Estimated Total Annual Burden Hours: 5,000.

Dated: December 1, 2016.

Bob Faber,

Acting Treasury PRA Clearance Officer.

[FR Doc. 2016–29199 Filed 12–5–16; 8:45 am]

BILLING CODE 4810–10–P

FEDERAL REGISTER

Vol. 81 Tuesday,

No. 234 December 6, 2016

Part II

Department of Transportation

Federal Railroad Administration

49 CFR Parts 236 and 238

Passenger Equipment Safety Standards; Standards for Alternative Compliance and High-Speed Trainsets; Proposed Rule

DEPARTMENT OF TRANSPORTATION

Federal Railroad Administration

49 CFR Parts 236 and 238

[Docket No. FRA–2013–0060, Notice No. 1]

RIN 2130–AC46

Passenger Equipment Safety Standards; Standards for Alternative Compliance and High-Speed Trainsets

AGENCY: Federal Railroad Administration (FRA), Department of Transportation (DOT).

ACTION: Notice of proposed rulemaking (NPRM).

SUMMARY: FRA is proposing to amend its regulations for passenger equipment safety standards, which currently provide for passenger rail service in a shared right-of-way under two separate tiers of safety standards: Tier I (speeds up to 125 miles per hour (mph)) and Tier II (speeds up to 150 mph). Consistent with the regulations' approach supporting interoperable passenger rail service by sharing the right-of-way, this proposed rulemaking would add a new tier of safety standards (Tier III) to facilitate the safe implementation of interoperable high-speed passenger rail service at speeds up to 220 mph. However, Tier III standards would require operations at speeds above 125 mph to be in an exclusive right-of-way without grade crossings. The proposal also would establish crashworthiness and occupant protection performance requirements in the alternative to those currently specified for Tier I passenger trainsets. Adopting the proposed alternative crashworthiness and occupant protection requirements would remove regulatory barriers, allowing a more open U.S. rail market, incorporating recent technological designs. In addition, the proposal would increase from 150 mph to 160 mph the maximum speed FRA's existing regulations allow for passenger equipment that complies with FRA's Tier II standards.

DATES: Written comments must be received by February 6, 2017. Comments received after that date will be considered to the extent possible without incurring additional expense or delay.

FRA anticipates it can resolve this rulemaking without a public, oral hearing. However, if FRA receives a specific request for a public, oral hearing prior to January 5, 2017, FRA will schedule one and will publish a supplemental notice in the **Federal Register** to inform interested parties of the date, time, and location of any such hearing.

ADDRESSES: *Comments:* Comments related to Docket No. FRA–2013–0060, Notice No. 1, may be submitted by any of the following methods:

- *Web site:* The Federal eRulemaking Portal, *www.regulations.gov*. Follow the Web site's online instructions for submitting comments.
- *Fax:* 202–493–2251.
- *Mail:* Docket Management Facility, U.S. Department of Transportation, 1200 New Jersey Avenue SE., Room W12–140, Washington, DC 20590.
- *Hand Delivery:* Docket Management Facility, U.S. Department of Transportation, 1200 New Jersey Avenue SE., Room W12–140 on the Ground level of the West Building, between 9 a.m. and 5 p.m., Monday through Friday, except Federal holidays.

Instructions: All submissions must include the agency name, docket name, and docket number or Regulatory Identification Number (RIN) for this rulemaking (2130–AC46). Note that all comments received will be posted without change to *http://www.regulations.gov*, including any personal information provided. Please see the Privacy Act heading in the **SUPPLEMENTARY INFORMATION** section of this document for Privacy Act information related to any submitted comments or materials.

Docket: For access to the docket to read background documents or comments received, go to *http://www.regulations.gov* at any time or visit the Docket Management Facility, U.S. Department of Transportation, 1200 New Jersey Avenue SE., Room W12–140 on the Ground level of the West Building, between 9 a.m. and 5 p.m., Monday through Friday, except Federal holidays.

FOR FURTHER INFORMATION CONTACT: Devin Rouse, Mechanical Engineer, Passenger Rail Division, U.S. Department of Transportation, Federal Railroad Administration, Office of Railroad Safety, Mail Stop 25, West Building 3rd Floor, 1200 New Jersey Avenue SE., Washington, DC 20590 (telephone: 202–493–6185); or Michael Hunter, Trial Attorney, U.S. Department of Transportation, Federal Railroad Administration, Office of Chief Counsel, Mail Stop 10, West Building 3rd Floor, 1200 New Jersey Avenue SE., Washington, DC 20590 (telephone: 202–493–0368).

SUPPLEMENTARY INFORMATION:

Common Abbreviations

AAR Association of American Railroads
APTA American Public Transportation Association
ATD anthropomorphic test dummy
AW0 ready-to-run weight, empty
CEM crash energy management
CFR Code of Federal Regulations
CG center of gravity
EN EuroNorm
ETF Engineering Task Force
FE finite element
FEA finite element analysis
FRA Federal Railroad Administration
g gravitational acceleration (32.2 feet/second/second)
HSR high-speed rail
in inch(es)
kip kilopound(s)
kN kilo-Newton(s)
kph kilometer(s) per hour
lbf pound(s)-force
lbs pounds
mph mile(s) per hour
ms millisecond(s)
MU multiple unit
NEC Northeast Corridor
OVI occupied volume integrity
PTC Positive Train Control
ROW right-of-way
RSAC Railroad Safety Advisory Committee
ITM inspection, testing, and maintenance
PTEP Passenger Train Emergency Preparedness
PESS Passenger Equipment Safety Standards
U.S.C. United States Code
UIC International Union of Railways

Table of Contents

I. Executive Summary
II. Statutory and Regulatory Background
A. Statutory Background
B. Implementation of the 1994 Passenger Safety Rulemaking Mandate
C. Overview of the Railroad Safety Advisory Committee
D. Establishment of the Passenger Safety Working Group and the Engineering Task Force
III. Technical Background and Overview
A. General: Approaches to Crashworthiness and Occupant Protection
B. Development of Technical Criteria and Procedures Report
C. Adoption of Alternative Crashworthiness and Occupant Protection Performance Standards for Tier I Passenger Equipment and New Standards for Tier III Passenger Equipment
1. Occupied Volume Integrity
2. Truck Attachment Strength
3. Interior Attachment Strength
D. Development of Specific Requirements for Tier III Passenger Equipment
1. Brake Systems
2. Cab Glazing
3. Emergency Systems
4. Cab Equipment
IV. Section-by-Section Analysis
V. Regulatory Impact and Notices
A. Executive Orders 12866 and 13563 and DOT Regulatory Policies and Procedures
B. Regulatory Flexibility Act and Executive Order 13272; Regulatory Flexibility Assessment
C. Paperwork Reduction Act
D. Federalism Implications

E. International Trade Impact Assessment
F. Environmental Impact
G. Executive Order 12898 (Environmental Justice)
H. Executive Order 13175 (Tribal Consultation)
I. Unfunded Mandates Reform Act of 1995
J. Energy Impact
K. Privacy Act
L. Analysis Under 1 CFR Part 51

I. Executive Summary

This proposed rule is the product of consensus reached by FRA's Railroad Safety Advisory Committee (RSAC), which accepted the task of reviewing passenger equipment safety needs and programs and recommending specific actions that could be useful to advance the safety of passenger service, including the development of standards for the next generation of high-speed trainsets. The RSAC established the Passenger Safety Working Group (''PSWG'' or ''Working Group'') to handle this task and develop recommendations for the full RSAC to consider. In September 2009, the Working Group in turn established the Engineering Task Force (''ETF'' or ''Task Force'') for the purpose of producing a set of technical criteria and procedures to evaluate passenger rail equipment built based on alternative designs. This work led to the development of the report entitled ''Technical Criteria and Procedures for Evaluating the Crashworthiness and Occupant Protection Performance of Alternatively Designed Passenger Rail Equipment for Use in Tier I Service'' (Technical Criteria and Procedures Report or Report).[1] The guidance in the Technical Criteria and Procedures Report has assisted railroads and rolling stock manufacturers who have petitioned FRA for waivers from compliance with FRA's Tier I passenger equipment crashworthiness standards, and has been useful to FRA in evaluating such petitions. In addition to developing the criteria in that Report, the task of the ETF was expanded to develop formal recommendations to the full RSAC for adopting these alternative crashworthiness criteria into FRA's regulations and to establish minimum safety requirements for the next generation of high-speed trainsets, capable of operating at speeds of up to 220 mph, classified as Tier III passenger equipment. The ETF reached consensus on recommending the adoption of these alternative crashworthiness criteria in 49 CFR part 238 for Tier I passenger equipment. The ETF also reached consensus on criteria for Tier III passenger equipment, specifically trainset structure, side-window glazing, brake systems, interior fittings and surfaces, certain emergency systems and cab equipment, and cab glazing. The ETF further reached consensus on the definition of Tier III, including the proposed speed limitations on when Tier III equipment can operate on shared infrastructure and when the equipment must operate in an exclusive right-of-way. On June 14, 2013, the full RSAC voted to recommend the consensus items to the Administrator of FRA, as the basis for a formal rulemaking.

This NPRM is based on these RSAC recommendations and, in particular, represents the first phase of rulemaking to establish Tier III passenger equipment safety standards as the work of the ETF continues.

This NPRM proposes requirements in three main subject areas: (1) Tier III trainset safety standards; (2) alternative crashworthiness and occupant protection performance requirements for Tier I passenger equipment; and (3) the maximum authorized speed for Tier II passenger equipment. The following is a brief overview of the proposed rule organized by subject area and a summary of its economic impact.

Tier III Trainset Safety Standards

This NRPM proposes to define Tier III passenger train operations and outline minimum safety standards for the use of such trainsets in the United States, focusing on core structural and critical system design criteria. FRA intends for the Tier III trainset requirements to facilitate safe implementation of interoperable high-speed rail service, enable the use of common infrastructure, and promote efficiencies. The Tier III operating environment would be unique: Tier III passenger trains would operate in a shared right-of-way at speeds up to 125 mph and in an exclusive right-of-way without grade crossings at speeds up to 220 mph. The requirements would provide for the sharing of rail infrastructure among various types of rail equipment, especially in more urban areas, while providing for dedicated passenger rail service at maximum speeds up to 220 mph. FRA's Passenger Equipment Safety Standards would therefore continue to allow high-speed passenger rail service to be interoperable with other types of rail service, the same way that Tier I and Tier II passenger train operations are currently interoperable.

The proposed rule would establish requirements for Tier III trainset structure, window glazing, brake systems, interior fittings and surfaces, certain emergency systems (including window egress and rescue access requirements), and certain cab equipment. To support operational compatibility, the proposed Tier III trainset crashworthiness and occupant protection requirements are predominantly based on the proposed alternative crashworthiness and occupant protection requirements for Tier I passenger equipment and are intended to safely apply to operations at speeds up to 220 mph in a dedicated environment as approved by FRA. Specialized RSAC task groups developed the requirements for braking systems and cab glazing by focusing on the development of performance-based requirements that could be implemented in a technology-neutral manner, wherever possible.

To develop their recommendations, the ETF and full RSAC considered the latest trainset designs and technology available globally, and adapted their recommendations for North American standards. The intent of the proposed requirements is to ensure that safety and reliability are paramount, while incorporating elements from the most advanced, service-proven technology. The proposed requirements would be supplemented by additional requirements FRA intends to propose in a subsequent rulemaking based on recommendations the ETF is developing, which remains active addressing the topics of inspection, testing, and maintenance (ITM), as well as safety planning for high-speed operations.

Alternative Crashworthiness Requirements for Tier I Passenger Trainsets

As noted above, FRA proposes to codify a set of technical evaluation criteria the ETF developed as guidance to those seeking to use alternatively designed Tier I passenger trainsets to demonstrate the trainsets' crashworthiness and occupant protection performance is equal to the requirements in part 238. We intend for the proposed alternative technical criteria to allow industry greater flexibility to use contemporary design techniques and more fully apply emerging technology, including crash energy management (CEM) technology, without requiring a waiver of compliance for operating the equipment. The technical criteria are based on established international standards and significant research and

[1] U.S. Department of Transportation Report No. DOT–FRA–ORD–11/22. Washington, DC: Federal Railroad Administration, Office of Railroad Policy Research and Development, October 2011, available at *http://www.fra.dot.gov/eLib/details/L01292#p4_z50_gD_lRT*.

testing both the industry and DOT's John A. Volpe National Transportation Systems Center (Volpe Center) conducted over the past 25 years. Codifying the technical criteria would dovetail with alternative crashworthiness performance requirements FRA established in part 238 for the front-end structures of cab cars and multiple-unit (MU) locomotives, thereby broadening application of such requirements to other main structures.

Tier II Maximum Authorized Speed

On March 13, 2013, FRA issued a final rule (78 FR 16052) to amend the Federal Track Safety Standards to promote the safe interaction of rail vehicles and the tracks they operate on at speeds up to 220 mph. That final rule revised the track geometry and safety limits for various track classes, extended the limits for the highest track speeds from 200 to 220 mph (Class 9 track), and affirmed that the maximum authorized speed for Class 8 track is 160 mph. This proposed rule would make the maximum authorized operating speed for Tier II passenger equipment consistent with the limits for Class 8 track. Under the proposal, existing Tier II operations FRA has approved to operate at speeds up to 150 mph would be required to provide sufficient testing and vehicle/track interaction performance data required under 49 CFR 213.329 and 238.111 and obtain FRA approval before any operations occur at the new maximum authorized speed of 160 mph.

At this time, FRA is not proposing to amend the Tier II crashworthiness and occupant protection requirements, or other specific Tier II requirements, to make them more performance-based. The Tier II standards are more stringent than those for Tier I passenger equipment or proposed for Tier III passenger equipment principally because they were developed to support operations above 125 mph in a right-of-way shared with freight and other rail traffic. See 64 FR 25629. To compensate for the increased risk of a collision, a more crashworthy trainset design was needed. FRA's focus in this NPRM, as informed by the RSAC process, has been principally to address the industry's need for more performance-based Tier I crashworthiness and occupant protection standards and to develop new Tier III standards to support the next generation of high-speed rail in an environment where operations above 125 mph are in a dedicated right-of-way (so as to avoid the risk of collision with other rail traffic at speeds above 125 mph). However, FRA makes clear that its approach to this NPRM does not mean FRA may not reexamine its Tier II requirements in the future.

Economic Analysis

This rule proposes to expand and make more flexible FRA's Passenger Equipment Safety Standards. The rule would introduce a new tier of safety standards, Tier III, passenger equipment must meet to operate at speeds up to 220 mph. Currently, FRA's Passenger Equipment Safety Standards do not specifically address safety requirements for passenger rail equipment operations at speeds above 150 mph. Furthermore, the current regulatory framework generally sets Tier I safety compliance through equipment design requirements which limit application of recent technology. Therefore, this rule would facilitate using more performance-based requirements to demonstrate Tier I compliance in alternative ways. FRA believes this rule would have a net beneficial effect on the passenger rail industry and society as a whole.

Specifically, the proposed rule would generate cost savings benefits by enabling high-speed rail operators to avoid new right-of-way acquisition and infrastructure construction for dedicated rail lines in dense urban areas. Instead it would allow such trains to travel on existing, non-dedicated rail lines but at slower speeds than permissible for travel on dedicated rail lines. As there is no comprehensive set of equipment safety regulations for this type of operation in the United States, a high-speed rail operation of this nature (operating at speeds up to 220 mph) could be constructed in the absence of this rule only if the operation was governed by a rule of particular applicability, which would set forth the minimum safety standards and conditions that would apply to the operator's proposed operation. Most likely, FRA would grant this regulatory approval only if the proposed system was self-contained (*i.e.,* no high-speed passenger trains intermixing with conventional passenger or freight trains, and no highway-rail grade crossings). Such a dedicated high-speed rail system would not be as efficiently integrated with the rest of the general rail system. Not issuing the proposed regulation would also increase costs associated with the acquisition of new passenger trains and could delay new U.S. passenger rail infrastructure projects. The proposed rule would ensure additional existing alternative designs can operate in the U.S. railroad environment on a widespread basis compared to existing FRA regulations. This would help avert a potential patchwork in the U.S. passenger rail fleet that would perpetuate the current unattractiveness of the U.S. passenger equipment market to manufacturers. The proposed rule would allow U.S. trainsets to use technological advances for the improvement of safety and passenger rail operations which cannot be used under existing regulations. (For example it would be cost prohibitive to adapt Japanese high speed train technologies under current U.S. regulations.)

There would also be safety benefits associated with improvement of the existing rail infrastructure to accommodate the operation of new high-speed rail equipment in these shared rights-of-way. Additionally, as the requirements herein are largely performance-based standards and not prescriptive requirements, the proposal would result in equipment benefits generated by passenger rail operators being able to adopt service-proven safety-equivalent technology and practices and apply future technological advancements.

Over a 30-year period, FRA estimates quantifiable benefits would range from $8.7 to $16.8 billion.[2] Of this total, $1.2 to $2.1 billion would be for equipment benefits and $7.5 to $14.7 billion would be for infrastructure benefits. FRA estimates the present value of the total benefits to be $3.8 to $7.1 billion (when discounted at a 7-percent rate) or $6.0 to $11.2 billion (when discounted at a 3-percent rate). The proposed rule would have a positive effect on society and the safety performance of the passenger railroad system. Some of the identified safety benefits are due to the ability to adopt safe equivalent technology and best practices to better the current safety environment, and to apply future technological advancements to improve rail safety.

[2] Tier III benefits are uncertain because they are based on assumptions regarding the future growth of high-speed rail operations and how those operations will be incorporated into the U.S. rail network. It is possible that all benefits relating to Tier III equipment, including infrastructure benefits, will be zero, which would occur if no high-speed rail projects come to fruition over the forecast horizon. Similarly, the estimated infrastructure benefits hinge on the assumption of not having to build dedicated HSR track for the whole system (*i.e.,* they represent savings from being able to operate HSR using shared infrastructure). If the baseline is shared infrastructure, then these benefits will not be realized. Tier III benefits, including infrastructure benefits, are provided for expository purposes. Similarly, Tier I benefits from having performance standards are challenging to quantify, as is always the case for such benefits. However, given that they provide an option to design standards, operators would only comply with such standards voluntarily if they found it beneficial to do so.

Over the same period, FRA estimates industry would incur approximately $4.6 billion in quantifiable costs, with a present value of $2.0 billion (when discounted at a 7-percent rate) or $3.2 million (when discounted at a 3-percent rate). All quantified costs [3] would be for testing to demonstrate compliance with either the Tier I alternative or Tier III standards. FRA assumes that the proposed rulemaking would provide an option, not a mandate, for railroads to use a different type or design of passenger equipment in Tier I service and would not impose any burden on existing rolling stock or new equipment qualifying under existing regulations. Similarly, the proposed rulemaking would only provide a framework for railroads to operate equipment in new Tier III service—it would not impose any burden on existing rolling stock or new equipment qualifying under existing regulations.

Alternatives Considered

One of the main purposes of the proposed regulation is to provide a set of minimum Federal safety requirements to determine whether passenger equipment platforms designed to contemporary standards outside of the U.S. are safe for operation in the U.S. rail environment. Traditionally, U.S. railroad safety regulations evolved as a consequence of specific accidents scenarios, which have led to the identification of specific risks in the operating environment. While FRA seeks to continue ensuring the safety risks are adequately addressed for the operating environment, the proposed rule places special emphasis on measures to avoid those risks rather than simply mitigating them.

Importantly, the proposed rule does not intend to adopt or incorporate by reference a specific international design standard. But it is intended to open up the U.S. passenger rail market, to the greatest extent possible, to global manufacturers while ensuring passenger equipment is safe.

The alternatives FRA considered in establishing the proposed safety requirements for Tier III trainsets are the European and Japanese industry standards. These options provide a continuum of safety requirements for a range of aspects such as: Varying levels of regulatory requirements; market accessibility; benefits and costs; and operational efficiency and safety.

FRA prepared a high-level cost comparison of those options based on the key attributes of the alternatives and the effect of those attributes on societal welfare and the regulatory purpose. FRA compared the technical requirements of other established high-speed rail standards to illustrate the primary differences, not a direct comparison between comparable requirements/standards.

Passenger rail equipment crashworthiness and occupant protection design standards have been largely standardized by Euronorms.[4] FRA concluded that there are no significant differences between trains built to the design standards contained in Euronorms and trains built to meet the crashworthiness and occupant protection requirements in the proposed rule. FRA estimates that on average trainset prices would increase $310,250 (0.62 percent) per trainset to meet the proposed Tier III requirements in this rule.

In Japan, railroad safety regulation is governed by the Railway Bureau, Ministry of Land, Infrastructure and Transport, and is codified in the Technical Regulatory Standards on Railways.[5] These technical standards are primarily performance-based and railways have the obligation to conform their operations, equipment and infrastructure to these standards. In the case of its high-speed rail system, the Shinkansen, the railway transports only passengers and the rail line is entirely dedicated to high-speed rail with no conventional trains operating and has full grade separation. These are the significant differences underlying the design of Shinkansen trainsets operating in Japan when compared to passenger trainsets currently operating in the U.S. The key to the Japanese high-speed rail network's ongoing safety and reliability is the principle of crash avoidance. Modifying advanced Japanese high-speed trainsets to comply with the proposed Tier III requirements and be interoperable in the U.S. rail system would likely be cost prohibitive; FRA estimates $4.7 million per trainset.

European trains generally would not need carbody, truck, suspension, or brake modifications to comply with the proposed Tier III requirements. However, either the analysis used to demonstrate compliance of the train safety features or components would require modification or minor design modification(s) would likely be needed, or both. These differences are illustrated in the following:

SUMMARY OF POTENTIAL CHANGES FOR EQUIPMENT DESIGNED TO EUROPEAN STANDARDS TO COMPLY WITH PROPOSED RULE IN THE U.S.

Analysis difference	Minor modifications required
• Quasi static compression	• End structure integrity of non-cab end.
• Dynamic collision scenario	• Interior fixture attachment.
• Override protection	• Seat crashworthiness.
• Fluid entry inhibition	• Luggage racks.
• Roof and side structure integrity	• Emergency window egress & rescue access windows.
• Glazing	• Emergency lighting.
	• Alerters.

The regulatory impact analysis (RIA) that accompanies this proposed rule contains a preliminary analysis of regulatory alternatives FRA considered. Specifically, the preliminary analysis compares at a general level the costs and benefits of the proposed Tier III requirements to both European and Japanese standards for high-speed trains. The preliminary analysis concludes that a hypothetical $50 million European high-speed trainset

[3] This assessment allows railroads to plan for future improvements and maintenance activities, minimizing capital investment but ensuring plant and operations are balanced for the expected service. Potential train delay was not quantified in this assessment. The relationship between train delays and the number of trains per day is determined by several factors inherent to the infrastructure, operations, and equipment used in the line segment. At this stage, it is difficult, to estimate the exact effect of the proposed rule on train delay in the United States because the characteristics of the rail lines affected by the proposed rule are still unknown.

[4] Euronorms title derived: ''Standard'' means ''norme'' in French and ''norm'' in German. *https://www.cen.eu/work/ENdev/whatisEN/Pages/default.aspx.*

[5] *http://www.mlit.go.jp/english/2006/h_railway_bureau/Laws_concerning/14.pdf.*

could be modified to comply with the proposed Tier III requirements with only minor structural modifications and as indicated above at little additional cost—about $310,000 per trainset. Modifications are expected to ensure such trainsets will safely operate in a U.S. setting. Due to the lack of historical safety information for operations at Tier III speeds in the U.S., FRA was unable to estimate the incremental safety benefit that would be provided by our proposed Tier III requirements as compared to the European standards. However, proposed requirements are supported by the recommendation of the RSAC and FRA is confident about the cost-beneficial nature of the proposal. Additionally, our analysis concludes that a hypothetical $50 million Japanese high-speed trainset would need significant structural modifications, including those to the carbody, trucks, and suspension, to comply with the proposed Tier III requirements, and would incur significant additional costs—about $4.7 million per trainset, as indicated above. Similarly, FRA is unable to provide an estimate of the expected incremental benefit of our proposed Tier III requirements, but we believe these additional costs are justified by the unique risks within the U.S. rail operating environment and the recommendations of the RSAC. U.S. high-speed trains may share track with other rail operations, including heavy and long freight trains, and operate on track with highway-rail grade crossings and the accompanying risks of colliding with trucks and other highway vehicles.

FRA conducted a qualitative analysis comparing the proposed Tier I alternative requirements to two alternatives: Not taking any regulatory action or adopting existing international design standards. As discussed in the RIA, trainsets compliant with international design standards (such as European or Japanese) would require extensive modifications to meet existing Tier I requirements if FRA elected to take no regulatory action. However, under the proposed Tier I Alternative requirements, FRA believes the cost associated with compliance would be similar to those discussed for Tier III equipment.

A second alternative would be to codify EN standards as a Federal regulation, instead of the proposed Tier I alternative requirements. This option opens the possibility for manufacturers to accrue savings from fewer modifications; however, such an option would require manufacturers to expend resources that favor a particular technology or approach to equipment design. Additionally, codifying EN standards in lieu of the proposed regulation may require equipment that is designed to some other standard to incur certain costs related to modifying the equipment to bring it into compliance. This means that regardless of the requirements codified, manufacturers will have to modify trainsets in order to meet these regulatory requirements. Importantly, trainsets meeting only a European standard (or Japanese or other international standard) would not be interoperable with existing U.S. passenger or freight equipment. Therefore, this equipment could only operate on an exclusive right-of-way, unable to take advantage of existing infrastructure.

FRA requests public comment on the alternatives presented and discussed here and invites suggestions for other alternatives that should be considered. Please also see the RIA's ''Alternatives Considered'' section, in which FRA similarly requests public comment on these and other alternatives.

FRA did consider the alternative of standalone HSR systems operating on an exclusive right-of-way (not physically connected to the general railroad system), utilizing passenger equipment that complies with European or other international standards but not necessarily with FRA's proposed requirements. For the reasons discussed below, FRA rejected this alternative. A major tenet of this rule is to safely facilitate the implementation of nationwide, interoperable HSR service. Standalone systems operating equipment that is not compliant with FRA's current or proposed passenger equipment safety standards would significantly limit the interoperability of HSR service. When developing the proposed requirements, FRA did not envision a network of standalone, non-interoperable HSR systems comprising the nationwide network.

Additionally, it would be very costly for a standalone system to attempt to connect with major metropolitan areas because those standalone systems could not take advantage of a major regulatory benefit—operating over existing infrastructure. FRA determined that 86 to 89 percent of the regulatory benefits are due to infrastructure cost avoidance for operations electing to use Tier I alternative and Tier III equipment. Interoperability will allow HSR operators to reach into major metropolitan areas where building a new, exclusive right-of-way may not be feasible due to land density, environmental, and other considerations.

An advantage of the standalone alternative is that such an individual railroad system could optimize its operations to high levels of performance without necessarily having to adhere to requirements generally applicable to railroad systems in the U.S. However, for such a project to attain that level of performance, the project would have to optimize the design of the entire system, not only the passenger equipment. Basically, a standalone system would have to bring together all the other aspects of railroad safety (such as operating practices, signal and train control, and track) that must be applied to the individual, standalone system. Given that such an approach covers more than passenger equipment, and would likely necessitate particular right-of-way intrusion protection and other safety requirements not adequately addressed in FRA's current regulations, FRA continues to believe that addressing proposals for standalone HSR systems on a case-by-case basis (RPA or waiver) is prudent because of the very small number of potential operations and the potential for significant differences in their design. Moreover, this form of regulatory approval is comprehensive, covering more than equipment safety concerns, to ensure proposed standalone systems properly address all rail safety concerns. Entities considering such operations voluntarily assume the higher costs of building new infrastructure, knowing they cannot take advantage of the cost savings from sharing existing infrastructure. Nonetheless, FRA requests public comment on whether the final rule should adopt other standards—including but not limited to the Japanese and European standards—that could be used in the alternative to the proposed requirements, potentially only in appropriate Tier I or Tier III operational environments. Comment on the specific alternative standard(s) it should consider, the operational environments in which it would be appropriate to allow use of such standard(s), and information on the benefits and costs of the alternative standard(s) compared to FRA's proposed approach is requested.

II. Statutory and Regulatory Background

A. Statutory Background

In September 1994, the Secretary of Transportation (Secretary) convened a meeting of representatives from all sectors of the rail industry with the goal of enhancing rail safety. As one initiative of this Rail Safety Summit, the Secretary announced that DOT would

begin developing safety standards for rail passenger equipment over a five-year period. In November 1994, Congress adopted the Secretary's schedule for implementing rail passenger equipment safety regulations and included it in the Federal Railroad Safety Authorization Act of 1994 (the Act), Public Law 103–440, 108 Stat. 4619, 4623–4624 (November 2, 1994). In the Act, Congress also authorized the Secretary to consult with various organizations involved in passenger train operations for purposes of prescribing and amending these regulations and to issue orders under it. See section 215 of the Act (codified at 49 U.S.C. 20133).

B. Implementation of the 1994 Passenger Safety Rulemaking Mandate

On May 4, 1998, under section 215 of the Act, FRA published the Passenger Train Emergency Preparedness final rule (PTEP). See 63 FR 24629. The PTEP contained minimum Federal safety standards for the preparation, adoption, and implementation of emergency preparedness plans by railroads connected with the operation of passenger trains, including freight railroads hosting the operations of passenger rail service. The rule also established specific requirements for passenger train emergency systems and contained specific requirements for participation in debrief and critique sessions following emergency situations and full-scale simulations.

On May 12, 1999, FRA published the Passenger Equipment Safety Standards final rule (PESS). See 64 FR 25540. The PESS established comprehensive safety standards for railroad passenger equipment including requirements for carbody structure and emergency systems. FRA subsequently amended the PESS to address petitions seeking FRA's reconsideration of certain requirements contained in the rule. In response to the petitions, FRA grouped issues together and published three sets of amendments to the final rule. See 65 FR 41284, Jul. 3, 2000; 67 FR 19970, Apr. 23, 2002; and 67 FR 42892, June 25, 2002.

FRA has engaged in a number of rulemakings to amend and enhance its passenger safety requirements. On October 19, 2006, FRA published a final rule addressing various requirements on the inspection, testing, and operation of passenger equipment, and the attachment of safety appliances. See 71 FR 61835. On February 1, 2008, FRA published the Passenger Train Emergency Systems final rule promoting passenger occupant safety by addressing emergency communication, emergency egress, and rescue access requirements. See 73 FR 6370. FRA also established additional requirements for passenger train emergency systems on November 29, 2013, see 78 FR 71785, revised and clarified its PTEP regulations on March 31, 2014, see 79 FR 18128, and established new standards to improve the integrity of passenger train exterior side door safety systems on December 7, 2015, see 80 FR 76118.

On January 8, 2010, FRA published a final rule enhancing requirements for the structural strength of the front end of cab cars and MU locomotives. See 75 FR 1180. FRA included energy-absorption requirements in the 2010 rulemaking to address traditional cab car and MU locomotive designs, with very strong underframes and relatively weaker superstructures, because it is vitally important to provide protection to crewmembers and passengers if the superstructure is impacted. In that rulemaking, FRA applied mature technology and design practice to extend requirements from linear-elastic to elastic-plastic and provided descriptions of allowable deformations without complete failure of the system. Although FRA believed at the time of the rulemaking that the alternative performance requirements would principally apply to shaped-nose equipment designs or CEM designs, or both, FRA also intended for them to apply to conventional flat-nosed equipment designs. In particular, the alternative performance requirements allow innovative designs that protect the occupied volume for its full height, even without traditional full-height collision and corner post structures, and the rule has been applied to such innovative end frame designs and traditional end frame designs.

C. Overview of the Railroad Safety Advisory Committee

FRA established the RSAC in March 1996 and it serves as a forum for developing consensus recommendations on rulemakings and other safety program issues. The RSAC includes representation from all of the agency's major stakeholders, including railroads, labor organizations, suppliers and manufacturers, and other interested parties.[6]

When appropriate, FRA assigns a task to the RSAC, and, after consideration and debate, RSAC may accept or reject the task. If the task is accepted, the RSAC establishes a working group that possesses the appropriate expertise and representation of interests to develop consensus recommendations to FRA for action on the task. A working group may establish one or more task forces to develop facts and options on a particular aspect of a given task. The individual task force then provides that information to the working group for consideration.

When a working group comes to unanimous consensus on recommendations for action, the package is presented to the full RSAC for a vote. If the proposal is accepted by a simple majority of RSAC members, the proposal is formally recommended to the Administrator of FRA. FRA then determines what action to take on the recommendation. Because FRA staff members play an active role at the working group level discussing the issues and options and drafting the language of the consensus proposal, FRA often adopts the RSAC recommendation.

FRA is not bound to follow the recommendation, and the agency exercises its independent judgment on whether a recommended rule achieves the agency's regulatory goal(s), is soundly supported, and is consistent with policy and legal requirements. Often, FRA varies in some respects from the RSAC recommendation in developing the actual regulatory proposal or final rule. FRA explains any such variations in the rulemaking. However, to the maximum extent

[6] The member groups are: American Association of Private Railroad Car Owners (AAPRCO); American Association of State Highway and Transportation Officials (AASHTO); American Chemistry Council; American Petroleum Institute; American Public Transportation Association (APTA); American Short Line and Regional Railroad Association (ASLRRA); American Train Dispatchers Association (ATDA); Association of American Railroads (AAR); Association of State Rail Safety Managers (ASRSM); Association of Tourist Railroads and Railway Museums; Brotherhood of Locomotive Engineers and Trainmen (BLET); Brotherhood of Maintenance of Way Employes Division (BMWED); Brotherhood of Railroad Signalmen (BRS); Chlorine Institute; Federal Transit Administration (FTA);* Fertilizer Institute; Institute of Makers of Explosives; International Association of Machinists and Aerospace Workers; International Association of Sheet Metal, Air, Rail and Transportation Workers (SMART), including the Sheet Metal Workers' International Association (SMWIA) and United Transportation Union (UTU); International Brotherhood of Electrical Workers (IBEW); Labor Council for Latin American Advancement (LCLAA);* League of Railway Industry Women;* National Association of Railroad Passengers (NARP); National Association of Railway Business Women;* National Conference of Firemen & Oilers; National Railroad Construction and Maintenance Association (NRCMA); National Railroad Passenger Corporation (Amtrak); National Transportation Safety Board (NTSB);* Railway Supply Institute (RSI); Safe Travel America (STA); Secretaria de Comunicaciones y Transporte (Mexico);* Transport Canada;* Transport Workers Union of America (TWU); Transportation Communications International Union/BRC (TCIU/BRC); and Transportation Security Administration (TSA).*
*Indicates associate, non-voting membership.

practicable, FRA utilizes RSAC to provide consensus recommendations with respect to both proposed and final agency action. If RSAC is unable to reach consensus on a recommendation for action, the task is withdrawn and FRA determines the best course of action.

D. Establishment of the Passenger Safety Working Group and the Engineering Task Force

On May 20, 2003, FRA presented the RSAC with the task of reviewing existing passenger equipment safety needs and programs and recommending consideration of specific actions that could be useful in advancing the safety of passenger rail service. In turn, the RSAC accepted the task and established the PSWG to handle the task and develop recommendations for the full RSAC to consider. Members of this Working Group, in addition to FRA, include many of the same entities as the full RSAC.[7]

On September 23, 2009, the Working Group established the ETF. The ETF was given the mission of developing technical criteria for the evaluation of passenger rail equipment built to alternative designs. Members of the ETF include representatives from various organizations that are part of the larger Working Group, in addition to FRA.[8]

The ETF developed the Technical Criteria and Procedures Report. After it developed the Report, the task of the ETF was expanded to (1) develop formal recommendations to the full RSAC to adopt the alternative crashworthiness criteria into FRA's regulations and (2) establish minimum safety requirements for the next generation of high-speed trainsets able to operate at speeds up to 220 mph,[9] classified as Tier III passenger equipment. While much of the ETF's initial work was used to develop the proposed crashworthiness elements of this NPRM, the ETF found it necessary to create smaller task groups to develop other and related technical criteria and recommendations for the safe operation of high-speed trainsets: The Brake Systems Task Group (BTG); Engineering, Structures, and Integrity (ESI) Task Group; Tier III Cab Glazing Task Group; and Vehicle-Track Interaction (VTI) Task Group. In addition, as explained below, the ETF established a task group to examine various requirements in 49 CFR part 229 and determine their applicability to Tier III trainsets. FRA intends to use the work of that part 229/Inspection, Testing and Maintenance Task Group—the ''229/ITM Task Group''—in a future rulemaking so it is not specifically included in this proposal. With the exception of the Tier III Cab Glazing Task Group, the task groups consisted primarily of ETF members and participants.

The BTG was established in June 2011, in response to a request from industry representatives to develop technology-neutral requirements applicable to brake systems and technology commonly found on today's high-speed trainsets worldwide. The BTG met as a group from November 2011 to December 2012. Group members reviewed and compared current U.S. brake system requirements and international brake system requirements, including current U.S. inspection and maintenance requirements; analyzed common brake system features to determine basic brake system parameters; and identified performance-based requirements to permit operators to develop equipment-specific maintenance, inspection and service plans. The BTG divided into two sub-groups representing the Asian and European perspectives on high-speed trainset design. Each sub-group independently compared Asian and European best practices to current U.S. brake system regulations. As needed, each sub-group developed proposed amendments to current U.S. regulations to incorporate international best practices. The BTG presented its recommendations to the ETF on December 6, 2012, jointly to the PSWG and the ETF on May 30, 2013, and to the full RSAC on June 14, 2013.

The ESI Task Group was established in June 2012 to provide additional technical and engineering guidance to standardize (to the extent possible and practical) how compliance with the provisions of the proposed requirements should be demonstrated. Since many of the proposed requirements in the NPRM rely heavily on computer analysis and simulations to demonstrate compliance, the ETF sought to separate the criteria (the performance requirements) from the methodology of demonstrating compliance with those requirements. The original Report included both technical criteria and procedures for actually demonstrating that the proposed alternatives to current requirements could provide an equivalent level of safety. The Task Force agreed that the procedures were not appropriate to include in the regulatory language, and recommended that the rule text contain only the criteria and conditions for which such criteria apply. It recommended that the detailed procedures for demonstrating compliance with the criteria be in an accompanying guidance document or industry standard. The ESI Task Group met from July 2012 to March 2013, and developed a draft guidance document of suggested methods for demonstrating compliance with proposed Tier I alternative and Tier III crashworthiness requirements. This group will reconvene to finalize this document and develop a more general compliance document to accompany ETF rulemakings.

The Tier III Cab Glazing Task Group was created to resolve particular issues related to proposed cab glazing requirements for Tier III trainsets. The group consists of ETF members, and glazing experts and manufacturers from around the world. The group met four times between March and May 2013. It presented its recommendations for this NPRM to the PSWG on May 30, 2013, which FRA has adopted.

The VTI Task Group evaluated whether high-speed trainsets operate safely under conditions the Federal Track Safety Standards in 49 CFR part 213 establish. The VTI Task Group focused on the conditions presented at lower-speed classes of track, and whether certain conditions presented a challenge to the highly-specialized suspension systems of high-speed trainsets. This group provided intermediate findings to the ETF. However, the ETF decided the

[7] AAR, including BNSF Railway Company (BNSF), CSX Transportation, Inc. (CSXT), and Union Pacific Railroad Company (UP); AAPRCO; AASHTO; Amtrak; APTA, including Bombardier, Inc., Herzog Transit Services, Inc., Interfleet Technology, Inc. (Interfleet), Long Island Rail Road (LIRR), Maryland Transit Administration (MTA), Metro-North Commuter Railroad Company (Metro-North), and Northeast Illinois Regional Commuter Railroad Corporation; ASLRRA; ATDA; BLET; BRS; IBEW; NARP; NRCMA; NTSB; RSI; SMART, including SMWIA and UTU; STA; TCIU/BRC; Transport Canada; TSA; and TWU.

[8] AAR; AAPRCO; AASHTO, including California Department of Transportation, and Interfleet; APTA, including Alstom, Ansaldo Breda, Bombardier, Central Japan Railway Company (JRC), China South Locomotive and Rolling Stock Corporation (CSR), Denver Regional Transportation District (RTD), East Japan Railway Company, Faiveley Transport, GE Transportation, Japan International Transport Institute, Japan's Ministry of Land, Infrastructure, Transport and Tourism, Kawasaki, Keolis, KPS N.A., LIRR, LTK Engineering Services, Marsh, Metro-North, Nippon Sharyo, Parsons Brinckerhoff, PS Consulting, Safetran Systems, SEPTA, Sharma & Associates, Siemens, Southern California Regional Rail Authority (SCRRA), Stadler, STV, Talgo, Texas Central Railway, Veolia, Voith Turbo, and Wabtec; Amtrak; ASLRRA; BLET; European Railway Agency (ERA); NTSB; RSI, including Battelle Memorial Institute, and ENSCO; SMART, including SMWIA and UTU; TCIU/BRC; and Transport Canada.

[9] FRA elected 220 mph as the maximum operating speed for Tier III equipment to remain harmonious with FRA's track safety standards (49 CFR part 213). See 78 FR 16052, Mar. 13, 2013 (discussing the reasoning and research behind the 220 mph maximum track speed).

information was not sufficiently conclusive to warrant continued exploration of the topic at the time.

As noted above, the ETF established an additional task group to examine various requirements in 49 CFR part 229 and determine their applicability to Tier III trainsets. This task group more narrowly addresses concerns and discussions originating from the BTG. This ongoing 229/ITM Task Group is developing appropriate language to apply pertinent elements from 49 CFR part 229 and ITM provisions from 49 CFR part 238 to both Tier I and Tier II passenger equipment, and recommending equivalent requirements for Tier III trainsets. The work of the 229/ITM Task Group is ongoing, and the ETF intends to incorporate the group's work into future rulemaking recommendations.

Overall, in addition to the work of the various task groups, the full ETF met 18 times over four years in support of the development of this NPRM. Minutes of each of the meetings are part of the docket in this proceeding and are available for public inspection.[10]

To assist the ETF, FRA often drafted proposed regulatory text for discussion at the various task groups' meetings and task group participants offered suggested changes and additions to the proposed draft text. In addition, staff from the Volpe Center attended all of the ETF's meetings and made significant contributions to the technical discussions and development of the ETF's work product, especially the Technical Criteria and Procedures Report.

Through the many meetings and discussions, proposed regulatory language was developed and then presented, accepted, and approved at a joint meeting of the ETF and the Working Group on May 30, 2013. The consensus language was then presented before the full RSAC on June 14, 2013, where it was approved by consensus vote, including the recommendations from the Tier III Cab Glazing Task Group (which were in a separate document). The Working Group's recommendations were thereby adopted by the full RSAC as its recommendations to FRA. The ETF did hold an additional meeting on September 11–12, 2013, which concerned these recommendations; the ETF addressed comments from ETF members to add clarification to, but not alter, the agreed-upon recommendations.

This NPRM is a product of the RSAC's consensus recommendations and FRA believes the NPRM is consistent with RSAC's recommendations. Please note that the RSAC did not expressly consider FRA's proposal concerning the removal of the requirement for a rule of particular applicability to conduct operations at speeds above 150 mph, as specified in subpart I of part 236 of this chapter. See the discussion of proposed changes to § 236.1007 of this chapter in the section-by-section analysis, below. FRA nonetheless believes this proposal, concerning the removal of this language from part 236, is consistent with the RSAC recommended approach to Tier III operations.

III. Technical Background and Overview

A. General: Approaches to Crashworthiness and Occupant Protection

FRA, with help from the Volpe Center, conducted substantial research on rail equipment crashworthiness to establish a base of information to use to evaluate, amend, and develop regulations (with a specific focus on performance-based regulations) to respond to industry needs. Recognizing that railroads seek to deploy equipment designed to more performance-based and modern standards, FRA advanced its efforts to keep its crashworthiness regulations apace with current safety technology, particularly for passenger trains. In a passenger train collision or derailment, the principal crashworthiness risks that occupants face are the loss of safe space inside the train due to crushing of the train structure and, as the train decelerates, the risk of secondary impacts with interior surfaces. Therefore, the principal goals of the crashworthiness research FRA sponsored are twofold: First, to preserve a safe space in which occupants can ride out the collision or derailment; and, second, to minimize the physical forces occupants are subjected to when impacting surfaces inside a passenger train as the train decelerates.

Crashworthiness regulations and specifications are intended to result in equipment features that increase survivability in accidents. The traditional approach to verify rail equipment crashworthiness in the U.S. (which is the approach used in FRA's existing regulations) is essentially car-oriented, prescribing such characteristics as the strength of the carbody and the strength of the attachment of the trucks. These features are intended to be effective for a wide range of accident conditions the equipment may be subjected to in service. The modern approach to rail equipment crashworthiness adds train-oriented specifications and typically includes minimum survivability requirements for prescribed collision scenarios. The modern approach to rail equipment crashworthiness does not replace the traditional approach. Rather, the modern approach expands the focus and manner in which rail equipment crashworthiness is evaluated, often using the traditional requirements as a performance baseline.

Modern specifications generally describe the crashworthiness performance desired of equipment that utilizes CEM features. Significant research has been conducted on CEM strategies by both FRA/Volpe and industry. CEM systems in passenger trains can improve crashworthiness by incorporating crush zones in unoccupied areas of the train cars. These zones are designed to collapse in a controlled fashion during a collision, dissipating collision energy by distributing crush through the unoccupied areas of the cars. This occupant protection strategy intends to preserve the occupied volumes in the train and limit the decelerations that occupants experience. In fact, Tier II passenger equipment must be designed with a CEM system to dissipate kinetic energy during a collision, see § 238.403, and Amtrak's Acela Express trainsets were designed with a CEM system complying with this requirement. CEM-designed equipment has demonstrated that it preserves all occupied volume in a train-to-train collision scenario at more than twice the closing speed of conventional equipment in the same scenario where the CEM-designed equipment has the same level of occupied volume strength as conventional equipment.

B. Development of Technical Criteria and Procedures Report

In 2009, FRA elected to develop, in consultation with RSAC, alternative criteria and procedures to assess the crashworthiness and occupant protection performance of rail passenger equipment applicable to a wide range of equipment designs to be used in Tier I

[10] These meetings were held on the following dates and in the following locations: September 23–24, 2009, Cambridge, Massachusetts; November 3–4, 2009, Philadelphia, Pennsylvania; January 7–8, 2010, Atlanta, Georgia; March 9–10, 2010, Orlando, FL; October 20–21, 2010, Cambridge, Massachusetts; January 11–12, 2011, Orlando, Florida; February 14–15, 2011, Washington, DC; March 30–31, 2011, Washington, DC; June 16–17, 2011, Boston, Massachusetts; October 6–7, 2011, New Orleans, Louisiana; June 27–28, 2012, Manhattan Beach, California; September 25–26, 2012, Washington, DC; December 6, 2012, Arlington, Virginia; February 13–14, 2013, Washington, DC; May 30, 2013, Washington, DC; and September 11–12, 2013, Washington, DC.

service. The ETF was charged with producing a set of technical criteria and procedures for evaluating petitions for waivers from (or, as appropriate under § 238.201(b), approval of alternative compliance with) one or more of the Passenger Equipment Safety Standards; these technical criteria and procedures were published in 2011.[11] The ETF developed the technical evaluation criteria and procedures so that they would provide a means of establishing whether equipment of an alternative design would result in at least equivalent performance to that of equipment designed in accordance with the structural standards in 49 CFR part 238.

FRA intended that entities (*i.e.,* railroads, equipment manufacturers, and consultants) would apply these criteria and procedures to support requests for waiver of the applicable regulations to allow alternative evaluation of safety performance. To assist with this effort, RSAC's ETF had the following goals: Produce clear, realistic technical requirements, benefiting from the collective ''best'' thinking in the passenger rail industry; define the analysis and testing required to demonstrate compliance with the technical requirements; provide clear pass/fail criteria for the analyses and tests; and work expeditiously so that sponsors of potential passenger service recognize available equipment options. Through RSAC's ETF, FRA began to work with the industry to develop new criteria to evaluate passenger equipment designed to standards differing from those historically used for procurements in the U.S. (*e.g.,* AAR and APTA standards), while providing an equivalent level of crashworthiness. The initial work of the ETF culminated in development of the Technical Criteria and Procedures Report. The Report contains guidelines for assessing the crashworthiness and occupant protection performance of alternatively-designed equipment used in Tier I service, including trainsets designed for operation outside the U.S. that may not be compliant with FRA's current requirements. As described in the Report, the criteria are defined by the specific conditions evaluated and the critical results of the evaluation; the procedures are defined as the analysis and test techniques applied to demonstrate compliance with the criteria. The criteria and procedures developed take advantage of the latest technology in rail equipment crashworthiness.

[11] *http://www.fra.dot.gov/eLib/details/L01292#p4_z50_gD_lRT.*

C. Adoption of Alternative Crashworthiness and Occupant Protection Performance Standards for Tier I Passenger Equipment and New Standards for Tier III Passenger Equipment

After initial publication of the Technical Criteria and Procedures Report, FRA concluded it would be beneficial to revise the Passenger Equipment Safety Standards to formally adopt the alternative crashworthiness and occupant protection performance criteria, in part due to renewed demand for passenger equipment in the U.S. By codifying the criteria into the regulations, FRA could expand the options for regulatory compliance in a clearer and more direct manner. This would reduce the industry's burden and risk of relying solely on waiver petitions to provide flexibility for additional safety-equivalent options for passenger car designs and the use of modern CEM technology. Therefore, FRA presented the ETF with a regulatory plan to formally adopt Tier I alternative crashworthiness and occupant protection performance standards within part 238, based on the criteria previously developed by the ETF.

At the same time, while the ETF developed the Technical Criteria and Procedures Report, the RSAC expanded the mission of the ETF to develop new safety standards for the next generation of interoperable high-speed rail passenger equipment capable of speeds up to 220 mph (Tier III). The technical criteria and procedures the ETF originally developed as alternatives for Tier I equipment also are the basis for the proposed crashworthiness and occupant protection requirements for Tier III equipment in this NPRM. Therefore, FRA discusses the crashworthiness and occupant protection performance requirements proposed in this NPRM together for both tiers of passenger train service and highlights the pertinent differences between the alternative criteria and procedures described in the Report for Tier I equipment and the crashworthiness and occupant protection proposals for Tier III equipment in the section-by-section analysis.

It is important to note that the development of the Technical Criteria and Procedures Report was heavily influenced by international experience with high-speed rail.[12] In particular, FRA drew from European standards, attempting to harmonize, to the extent possible, the technical criteria and procedures FRA developed (and is consequently proposing to require in this NPRM) with the technical requirements in the European standards. This was done in part to minimize the burden on foreign car builders entering the U.S. marketplace and to take advantage of sophisticated means of validating equipment designs.

However, FRA found that in some instances the technical requirements of the European standards did not fully address the safety concerns presented by the U.S. operating environment. FRA, in the section-by-section analysis, has highlighted those divergences. For example, in § 238.705, Dynamic collision scenario, FRA discusses the need for an additional collision scenario with a large rigid mass (a rigid or non-deformable locomotive) as opposed to a deformable mass. The additional scenario provides further insight on how tested equipment performs in preserving the occupied volume during a collision with a rigid mass, which is a known collision scenario in the U.S. rail operating environment. Additionally, in § 238.733, Interior fixture attachment, FRA proposes a greater level of interior fixture attachment strength than the European standard of ±1g laterally. This enhancement is necessary for safety, is not an onerous requirement, and represents only a minimal increase in overall trainset cost if modifications are required.

Overall, it is important to recognize that differences between the proposed requirements and international technical standards do not mean that in all cases structural modifications are necessary. Equipment designed to international standards can meet the requirements of this proposal. Therefore, the most immediate burden this proposal places on a foreign equipment manufacturer is to validate, and provide supporting documentation, that the equipment meets FRA's requirements, as proposed.

1. Occupied Volume Integrity

To meet FRA's existing passenger train crashworthiness regulations, the underframe of a train car must not experience permanent deformation when subjected to a large compressive load at the coupler locations at either end of the car. Car deformation must remain elastic (no permanent deformation) when subjected to 800,000

[12] *See* U.S. Department of Transportation Report No. DOT–FRA–ORD–11/22. Washington, DC: Federal Railroad Administration, Office of Railroad Policy Research and Development, October 2011, available at *http://www.fra.dot.gov/eLib/details/L01292#p4_z50_gD_lRT.*

pounds (lbs) of force applied along the line of draft (the theoretical line running from the coupler at one end of the car to the other). Beginning in 1939, AAR formally recommended this practice for new passenger equipment operated in trains of more than 600,000 lbs empty weight in response to numerous fatal accidents involving compromised occupied volumes. In 1945, this recommendation was adopted into AAR Standard S–034—Specifications for the Construction of New Passenger Equipment Cars. Federal law applied this standard to all MU locomotives built new after April 1, 1956 and operated in trains having a total empty weight of 600,000 lbs or more. See 49 CFR 229.141(a). In 1999, when FRA issued the Passenger Equipment Safety Standards, FRA expanded this 800,000-pound static strength standard by Federal regulation to virtually all intercity passenger and commuter rail equipment (see 49 CFR 238.203, 238.405).

This line-of-draft strength approach has remained the cornerstone of occupied volume integrity (OVI) evaluation for nearly a century for several reasons. The pass/fail criterion of no permanent deformation anywhere in the vehicle is straightforward to implement and can be readily examined visually and confirmed using strain gages or other measuring devices. If the test is conducted properly and successfully, the vehicle remains in its original condition and can therefore enter service following the test. The intended nondestructive nature of the test makes it economical to perform because the first manufactured vehicle serves both as test article and proven, deliverable product.

In addition, this proof-strength approach provides additional crashworthiness benefits and has increased in importance as additional crashworthiness features are incorporated in the structure of passenger rail vehicles. For instance, for an end frame to successfully prevent an intrusion from impacts above the floor, the structure supporting the end frame must itself be sufficiently strong. A strong end frame attached to an insufficiently robust supporting structure may prevent intrusion at the end of the vehicle but cause loss of occupied volume elsewhere in the vehicle as collision loads travel through the occupied volume. The proof-strength approach is effective in demonstrating the sufficiency of the underlying supporting structure and FRA is proposing to optimize it for application to CEM designs.

Ultimately, preserving the occupied volume is accomplished primarily by ensuring the strength of the structure protecting it. If the occupied compartment is sufficiently strong, survivable space for the occupants is maintained. Secondary impacts are limited through a combination of structural crashworthiness and occupant protection measures. Allowing portions of the car to crush in a predetermined manner can limit the forces applied to the structure surrounding the occupied volume and control the decelerations that occupants experience. Conventional practice is to make individual cars uniformly strong and principally attempt to control the behavior of individual cars during a collision. The CEM approach is train-oriented, controlling the load into the occupied volume, and apportioning the structural crushing to unoccupied areas throughout the train.

Within Europe, passenger trains are subject to two distinct standards for ensuring adequate OVI. European Standard (or Euronorm) EN 12663, ''Railway Applications—Structural Requirements of Railway Vehicle Bodies—Part 1: Locomotives and Passenger Rolling Stock (and Alternate Method for Freight Wagons),'' contains several quasi-static load cases to be evaluated at different locations on train cars, including a line-of-draft load case. The load locations and the magnitude of the load to be applied at each location tend to differ from U.S. requirements. In addition to EN 12663, a second standard, EN 15227, also applies to passenger rail equipment in Europe. EN 15227, ''Railway Applications—Crashworthiness Requirements for Railway Vehicle Bodies,'' contains several dynamic impact scenarios that must be evaluated. EN 12663 and EN 15227 were developed to work in concert with one another, with EN 12663 used to ensure a baseline level of OVI and EN 15227 used to ensure a baseline level of performance in an idealized collision.

FRA has employed a similar, two-step approach to OVI in this NPRM. Because a strong OVI serves as the foundation for other crashworthiness features, such as CEM components, a quasi-static OVI requirement is included. Whereas current domestic practice provides that the evaluation loads be applied along the line-of-draft, the proposed regulation instead places the evaluation loads at the locations on the occupied volume that constitute the ends of the collision load path. FRA intends for this change in placement of the loads to ensure that for designs featuring CEM elements, or another non-conventional longitudinal load path, the evaluation loads are applied in areas that will actually experience high compression loads during an accident. This helps ensure the rail vehicle possesses adequate OVI to restrict crushing to the intended CEM elements during a collision severe enough to activate the CEM system. The load magnitudes proposed in this NPRM were chosen to help ensure structural compatibility between existing Tier I rail equipment and any future vehicles designed to meet the proposed requirement.

The second OVI requirement FRA is proposing in this NPRM involves a dynamic collision scenario evaluated using a standardized train consist (the ''initially-standing train'') being struck by the trainset undergoing evaluation (the ''initially-moving train''). Whereas the quasi-static OVI requirement is applied at the individual car-level, this scenario is applied at the trainset-level. The results of the scenario evaluation are used to evaluate CEM system performance, override resistance, and truck attachment integrity. Working together, the quasi-static OVI requirement and the dynamic collision scenario requirements help ensure the energy-absorbing features of a design function at a trainset-level and that each car possesses sufficient OVI to resist loss of occupied volume during operation of the energy-absorption components.

2. Truck Attachment Strength

The current FRA regulation for Tier I passenger equipment truck attachment, 49 CFR 238.219, Truck-to-car-body attachment, specifies static load requirements. In an effort to develop standards that are more performance-based, the ETF recommended dynamic load requirements for alternatively evaluating truck attachment strength. However, comparing the safety differences between the proposed dynamic requirements and existing static requirements is not straightforward. There are many different design approaches in service for attaching the truck to the carbody and meeting the current static load requirements. The different designs have exhibited varied performance in accidents: In some relatively severe accidents, compliant designs have remained attached; while in some less severe accidents, compliant designs have become detached. The ETF strove to assure the performance the alternative, dynamic truck attachment requirements provide would be at least as effective as that the attachment strength of an average or typical truck compliant with the current static

requirements provides. The alternative, dynamic truck attachment requirements the ETF developed and recommended provide for demonstration of compliance using results from the same computer simulation of the train-to-train collision scenario used to demonstrate sufficient OVI.

3. Interior Attachment Strength

FRA's existing, acceleration-based performance requirements for interior attachments were established after years of industry practice designing interior fittings to withstand the forces due to accelerations of 6g longitudinally, 3g laterally, and 3g vertically. As noted in the 1997 NPRM for the Passenger Equipment Safety Standards rulemaking (62 FR 49728), FRA and NTSB investigations of accidents involving passenger trains designed based on this practice revealed that luggage racks, seats, and other interior fixtures breaking loose were a frequent cause of injury to passengers and crewmembers. Due to injuries caused by broken seats and other loose fixtures, FRA concluded that the practice of designing interior fittings to withstand accelerations of 6g longitudinally, and 3g laterally and vertically, was not adequate. FRA therefore proposed to enhance interior attachment fitting strength. In the 1999 final rule (64 FR 25540), FRA then set the current attachment strength requirements of 8g longitudinally, and 4g laterally and vertically. Subsequent accident investigations have revealed that interior fixtures that comply with the requirements for Tier I passenger equipment in § 238.233 perform significantly better than interior fixtures in passenger cars that do not meet the current regulations, *i.e.,* generally passenger cars already in service at the time the 1999 final rule took effect.

The ETF discussed at length requirements for interior fittings and occupant protection during accidents. As these discussions developed, there was a desire to accommodate existing equipment designs built to European standards, *i.e.,* EN 12663 and EN 15227, while maintaining a comparable level of safety to that within the U.S. rail operating environment. Many manufacturers of high-speed trainsets stressed during these discussions that this approach would allow the use of ''service-proven'' designs and avoid the need for significant redesign that would affect critical suspension characteristics or lead to a completely new and unproven vehicle platform. In the interest of maintaining the industry's ability to adopt service-proven designs, the ETF examined existing practices throughout the world to help establish how current and proven design practice could be evaluated for application in the U.S.

The ETF adopted an approach that incorporates specific requirements of Railway Group Standard GM/RT2100, Issue Four, ''Requirements for Rail Vehicle Structures,'' Rail Safety and Standards Board Ltd., December 2010 (GM/RT2100). GM/RT2100 is a safety standard that mandates requirements for the design and integrity of rail vehicle structures, including interior fixtures, for trains that operate in the United Kingdom (U.K.). GM/RT2100 (referencing EN 12663) requires interior fixtures to withstand carbody accelerations of 5g longitudinally, 1g laterally and 3g vertically. However, FRA has never found the 1g lateral acceleration requirement adequate for the U.S. rail operating environment. See FRA's Passenger Equipment Safety Standards final rule, published May 12, 1999, for a discussion on lateral attachment strength for interior fixtures (64 FR 25540).

Thus, the proposed rule increases this minimum lateral acceleration requirement to 3g, as further discussed in the section-by-section analysis below. FRA notes that the structural vehicle requirements in EN 15227 limit the mean longitudinal deceleration to 5g within certain specified collision scenarios for vehicles designed to operate on international, national, and regional networks (6.4.1). ETF industry members recommended attachment strength requirements consistent with the collision behavior of vehicle structures built to the Euronorm standards and FRA agreed with their recommendation. The specific details on how to apply this alternative international approach are discussed in the section-by-section analysis below.

D. Development of Specific Requirements for Tier III Passenger Equipment

While the proposed crashworthiness and occupant protection performance requirements for Tier III passenger equipment derive from the work initially conducted by the ETF for alternatively evaluating Tier I passenger equipment, the ETF did focus specifically on a more comprehensive body of requirements for Tier III passenger equipment. These include requirements for brake systems, cab glazing, emergency systems, and cab equipment. An overview of specific proposals for Tier III passenger equipment in these areas is provided below.

1. Brake Systems

Brake systems requirements for Tier III trainsets were developed from the recommendations of the RSAC's BTG. This group examined existing brake systems and technologies from around the world, and compared brake system requirements in the U.S. with systems on high-speed trainsets operating internationally. The goal of this task group was to identify common features and determine basic regulatory parameters that considered all types of service-proven braking systems, regardless of the technology employed.

To achieve this goal, the BTG created two sub-groups to examine trainset brake system design philosophies from both Asian and European industries that currently design trainsets to operate at the speeds envisioned for Tier III. The BTG focused on developing technology-neutral, performance-based braking system requirements by selecting the best practices and designs of the international models, while still maintaining the safety intent of the original, pneumatic-based U.S. requirements. This need for a technology-neutral approach was the cornerstone for development of the Tier III brake system recommendations to the ETF, which suggested creating new requirements that would both permit the use of applicable international standards and be performance-driven to allow the development of future technologies.

To accomplish this, the BTG suggested that FRA utilize the proposed Safe Operation Plan for Tier III Passenger Equipment (''Tier III Safe Operation Plan''), and ITM plan, discussed below, to establish and approve technology-specific performance metrics that it could not otherwise define without a prescriptive regulation. This recommendation, ultimately adopted by FRA following the RSAC process, is a fundamental concept reflected in other elements of this proposed rule: to maintain the core safety intent of existing U.S. requirements in a manner that takes into account the inherent safety of service-proven designs, as demonstrated on rail systems around the world.

2. Cab Glazing

FRA's original requirements for window and windshield safety glazing on locomotives, passenger cars, and cabooses were established in 49 CFR part 223 on December 31, 1979 (44 FR 77352) to protect railroad employees and passengers from injury due to objects striking windows or windshields. Part 223 specifies a

process for certifying window glazing material, including testing requirements for glazing in both end-facing (FRA Type I) and side-facing (FRA Type II) locations. With the introduction of Tier II requirements in 1999 (64 FR 25686) designed to provide protection at speeds up to 150 mph, FRA established additional requirements for both end-facing (FRA Type IH) and side-facing (FRA Type IIH) glazing locations in Tier II passenger equipment. FRA amended the large object impact requirements for end-facing glazing locations in 2002 (67 FR 19992) with slight modifications, creating FRA Type IHP glazing. See 49 CFR 238.421.

During the development of the Tier III requirements, the ETF decided a new, large object impact test was necessary for end-facing glazing locations (*e.g.* windshields) to address optical clarity issues stemming from current requirements (for both Tier I and II) and the need for a test procedure that could be repeated reliably. To address the optical clarity issue, the ETF wanted a methodology to use to evaluate the performance of the end-facing glazing system at its angle of installation (similar to the approach for Type IHP glazing in 49 CFR 238.421(b)(1)). Such a methodology would be more representative of the actual conditions in real-world applications. It would also help alleviate optical clarity issues resulting from thicker glazing as a function of higher operational speeds and perpendicular impact testing requirements in part 223. In addition, given the range of performance typically observed when testing most glazing materials, establishing a test procedure that could be reliably repeated on multiple test specimens was essential to ensure the quality of test results for these high-speed operations. FRA agrees with this approach.

To address these issues the ETF, through its Tier III Cab Glazing Task Group, sought to refine the glazing requirements for high-speed operations by examining current international practice. In particular, it focused on established and proven experience with the application of European standard EN 15152, and its predecessors, including International Union of Railways (UIC) standard UIC 651. It considered these standards together with high-speed rail operating experience involving the prominent modes and causes for glazing failure. These standards and operating experience, together with the existing glazing requirements for Tier I and Tier II operations, served as the basis for the development of the proposed requirements for Tier III operations.

3. Emergency Systems

This NPRM includes proposed requirements for passenger train emergency systems specific to Tier III trainsets and takes into account potential design considerations for Tier III trainset operating speeds. These proposed requirements focus particularly on emergency egress and rescue access through windows or alternative openings as part of an emergency window egress and rescue access plan. Sections 238.113 (Emergency window exits) and 238.114 (Rescue access windows) were used as the baseline requirements for the total number of emergency egress and rescue access windows, as well as their acceptable means of removal and their dimensions.

To address Tier III trainsets not designed to comply with the requirements in § 238.113 or § 238.114, the proposed rule would include a means for FRA to consider alternatives based on service-proven approaches that provide an equivalent level of safety. The railroad would submit to FRA for approval an emergency window egress and rescue access plan during the design review stage. This plan would allow consideration of: production challenges unique to high-speed trainsets, such as the need to pressurize compartments; proven international practice; and approaches other modes have taken (*e.g.,* emergency egress window panels/door exits similar to over-wing exit doors on aircraft). Where an appropriate safety case can be made, the proposed rule would allow a railroad to elect to employ an alternative feature or approach if the railroad can demonstrate an equivalent or superior level of safety.

This NPRM also addresses the attachment strength and performance of critical emergency systems. Specifically, it explains the requirements for minimum attachment strength of emergency lighting fixtures and any corresponding emergency power sources to be consistent with the approach we took for all other interior attachments in Tier III equipment. The NPRM would effectively provide a railroad with the option of complying with either the loading requirements currently applicable to Tier I equipment or alternative loading criteria based on an appropriate crash pulse that is justified by the intended vehicle design.

4. Cab Equipment

This NPRM contains certain equipment requirements proposed for the cabs of Tier III trainsets. These proposed requirements were developed by the RSAC's BTG and address alerters (devices installed in the controlling cab of trainsets that promote continuous, active locomotive engineer attentiveness by monitoring select trainset engineer-induced control activities) and sanders (appurtenances on trainsets that provide a means for depositing sand on each rail in front of the first power operated wheel set in the direction of movement to increase wheel-track adhesion). The BTG adopted the same approach it used to develop the braking system proposal for these two cab features, seeking performance-based requirements that could be implemented in a technology-neutral manner wherever possible. FRA intends to propose additional requirements for cab equipment in a future rulemaking based on recommendations developed by the 229/ITM Task Group.

IV. Section-by-Section Analysis

Part 236—Rules, Standards, and Instructions Governing the Installation, Inspection, Maintenance, and Repair of Signal and Train Control Systems, Devices, and Appliances

Subpart I—Positive Train Control Systems

Section 236.1007 Additional Requirements for High-Speed Service

FRA is proposing to remove paragraph (d) of this section as it is no longer relevant, and to redesignate paragraph (e) as paragraph (d) of this section. Paragraph (d) provides that, in addition to the requirements of paragraphs (a) through (c) of this section, a host railroad that conducts a freight or passenger operation at more than 150 mph shall have an approved Positive Train Control (PTC) Safety Plan (PTCSP) accompanied by an ''HSR–125'' developed as part of an overall system safety plan approved by the Associate Administrator for Railroad Safety and Chief Safety Officer (Associate Administrator). Paragraph (d) also provides that such an operation would be governed by a rule of particular applicability. Paragraph (c) of this section contains particular requirements for freight and passenger operations at speeds more than 125 mph, and provides that a host railroad have an approved PTCSP accompanied by an HSR–125. Generally, an HSR–125 is a document establishing that the system will be operated at a level of safety comparable to that achieved over the 5-year period prior to the submission of the PTCSP by other train control systems that perform PTC functions required by subpart I to 49 CFR part 236, and which have been utilized on

high-speed rail systems with similar technical and operational characteristics in the U.S. or in foreign service, and that the system has been designed to detect incursions into the right-of-way, including incidents involving motor vehicles diverting from adjacent roads and bridges, where conditions warrant.

The particular treatment in paragraph (d) of operations at speeds over 150 mph is a legacy of FRA regulations from the 1990s concerning high-speed rail. When FRA's Track Safety Standards (49 CFR part 213) were amended on June 22, 1998, to include standards for higher-speed operations, the rule envisioned regulating rail operations at speeds over 150 mph through a rule a particular applicability. See 63 FR 33992. This same approach was codified in the Passenger Equipment Safety Standards when the rule was promulgated in 1999. See 64 FR 25540. Subsequently, however, FRA amended the Track Safety Standards on March 13, 2013, to remove the prescriptive reference to a rule of particular applicability and make clear that operations at speeds above 125 mph require FRA regulatory approval. See 78 FR 16052. In this NPRM, FRA is similarly proposing to remove the prescriptive reference to a rule of particular applicability in the Passenger Equipment Safety Standards and reaffirm that operations at speeds over 125 mph require FRA regulatory approval.

Accordingly, FRA is proposing to modify 49 CFR 236.1007 to remove the prescriptive reference requiring a rule of particular applicability for operations at speeds over 150 mph. Paragraph (c) of this section would continue to require that operations at speeds over 125 mph require FRA regulatory approval. However, there is no further need to prescribe in all cases distinct regulatory treatment through a rule of particular applicability for operations at speeds above 150 mph. Operations in both speed ranges constitute high-speed rail operations and are regulated by FRA as such.

FRA does not intend anything in this proposal to affect any order of particular applicability FRA has issued or may issue. In 1998, FRA issued an order of particular applicability governing certain rail operations on the Northeast Corridor (NEC). See 63 FR 39343, Jul. 22, 1998. The order, as amended, specifies requirements for equipping trains to respond to the Advanced Civil Speed Enforcement System (ACSES) in NEC territory. See 71 FR 33034, Jun. 7, 2006. As delegated by the Secretary, FRA may issue such an order after an investigation requiring a railroad carrier to install, on any part of its line, a signal system that complies with requirements FRA has established as necessary for safety. See 49 U.S.C. chapter 205 (signal systems). Such an order of particular applicability has a far more limited scope than that envisioned at one time for a rule of particular applicability governing high-speed operations (*i.e.,* a comprehensive rule addressing all aspects of a high-speed rail operation, not just signal systems). To be clear, the order of particular applicability governing certain rail operations on the NEC will not be affected by this rulemaking.

Part 238—Passenger Equipment Safety Standards

Subpart A—General

Section 238.5 Definitions

FRA is proposing to add new definitions to this part and revise certain existing definitions to clarify the meaning of important terms and minimize potential for misinterpretation of the rule. FRA requests public comment regarding the terms defined in this section and whether we should also define other terms.

FRA proposes to revise the definitions of ''glazing, end-facing'' and ''glazing, side-facing,'' and to make technical revisions to the definitions of ''Tier II'' and ''Train, Tier II passenger'' to reflect the proposed change in the maximum authorized speed of Tier II passenger equipment from 150 mph to 160 mph. FRA also proposes to add new definitions for ''Associate Administrator,'' ''Cab,'' ''Tier III,'' ''Trainset, Tier I alternative passenger,'' ''Trainset, Tier III,'' and ''Trainset unit.'' Some of the proposed definitions we added involve new or fundamental concepts which require further discussion.

FRA proposes to define ''Associate Administrator'' to mean the FRA Associate Administrator for Railroad Safety and Chief Safety Officer, Associate Administrator for Railroad Safety, Associate Administrator for Safety, or the Associate Administrator's delegate. The title of Associate Administrator for purposes of this part has always referred to the same FRA official; only the full description of this official's title has changed since this part was originally promulgated. Because of the use of different titles in this part to refer to the same official, FRA proposes to add this definition to make clear that there is one official who is the Associate Administrator for purposes of this part. In the final rule, FRA may instead update and make consistent each reference to the Associate Administrator in each individual section of part 238 that refers to the Associate Administrator.

FRA proposes to add the definition ''cab'' to mean, for purposes of subpart H of this part, a compartment or space in a trainset designed to be occupied by the engineer and contain an operating console from which the engineer exercises control over the trainset. Cab includes a locomotive cab. FRA is adding a more general definition of ''cab'' to ensure the requirements apply to high-speed trainsets, which do not utilize conventional locomotives. This new definition for ''cab'' is not intended to impose any new requirement on other types of equipment. This definition presumes there is a typical design of a high-speed trainset where the engineer and operating console are located in the leading end of the trainset. Regardless, FRA would expect the protections of §§ 238.703 through 238.717 (Trainset structure) and § 238.721 (Glazing) to apply, as appropriate, to that leading end whether it is to be occupied by operating crewmembers or passengers, or both. In this regard, and consistent with the definition of ''Occupied volume'' under § 238.5, the protections mentioned above would apply, as appropriate, for the entire width of a trainset's leading end, irrespective of the occupant(s). In addition, this definition would apply to vehicles designed under appendix G to this part. FRA invites comment on this proposed definition, as well as comment on whether FRA should make more explicit in the rule text the protections that apply to the leading end of a trainset, whether intended to be occupied by crewmembers or passengers, or both.

FRA proposes to revise the definition ''glazing, end-facing'' to mean any exterior glazing located where a line perpendicular to the plane of the glazing material makes a horizontal angle of 50 degrees or less with the centerline of the vehicle in which the glazing material is installed, except for: The coupled ends of MU locomotives or other equipment that is semi-permanently connected to each other in a train consist; and, end doors of passenger cars at locations other than the cab end of a cab car or MU locomotive. Any glazing location which, due to curvature of the glazing material, can meet the criteria for either end-facing glazing or side-facing glazing would be considered end-facing glazing. This definition makes clear that the glazing location means an ''exterior'' location and expressly identifies locations that FRA would not consider end-facing glazing locations. Additionally, the definition accounts for the aerodynamic shape of vehicle front-ends and expressly provides that any

window, based on its geometry, that could be either an end-facing glazing location or a side-facing glazing location is considered an end-facing glazing location that must comply with the end-facing glazing requirements. FRA intends for this proposed definition to be substantively the same as the revised definition for ''end facing glazing location'' in the final rule on Safety Glazing Standards (part 223 of this chapter). See 81 FR 6775, Feb. 9, 2016. This revision is not intended to add any new requirement on glazing installed in passenger vehicles subject to the requirements of part 238. FRA intends this definition and other glazing requirements in the final rule to be consistent with the Safety Glazing Standards rulemaking.

FRA proposes to revise the definition ''glazing, side-facing'' to mean any glazing located where a line perpendicular to the plane of the glazing material makes a horizontal angle of more than 50 degrees with the centerline of the vehicle in which the glazing material is installed. Side-facing glazing also means glazing located at the coupled ends of MU locomotives or other equipment that is semi-permanently connected to each other in a train consist, and glazing located at end doors other than at the cab end of a cab car or MU locomotive. FRA intends for this proposed revision to be substantively the same as the revised definition for ''side facing glazing location'' in the final rule on Safety Glazing Standards, see id., and is necessary due to our proposed revision to the definition of ''glazing, end-facing'' in this part 238. Nonetheless, we do not intend for this revision to add any new requirement on glazing installed in passenger vehicles subject to the requirements of this part. As noted above, FRA intends this definition and other glazing requirements in the final rule to be consistent with the Safety Glazing Standards rulemaking.

As discussed above, FRA proposes to revise the definition of ''Tier II'' to increase the maximum speed allowable for this tier of passenger equipment from 150 mph to 160 mph. FRA likewise proposes to revise the definition ''train, Tier II passenger.'' In addition, FRA proposes to add a definition for ''Tier III'' to add this equipment safety tier to this part with the definition ''trainset, Tier III'' to apply the proposed Tier III requirements to such equipment. Further, FRA intends for these definitions to make clear that the definitions of Tier I and Tier II do not include Tier III passenger equipment merely because the equipment operates in the Tier I and Tier II speed ranges. The operation of passenger equipment in both lower- and higher-speed ranges is integral to the definition of Tier III (please see above for a more detailed discussion of these safety tiers). This Tier III definition also makes clear that 125 mph is the maximum speed at which Tier III equipment can operate when sharing the right-of-way with non-Tier III equipment or when highway-rail grade crossings are present along the right-of-way. FRA elected this maximum speed to maintain operational compatibility with non-Tier III equipment based on the safety equivalency of the crashworthiness and occupant protection requirements. Further, this definition makes clear FRA is limiting Tier III operations to an absolute maximum speed of 220 mph, which is the maximum track speed permitted under FRA's Track Safety Standards (49 CFR part 213). See 78 FR 16052, Mar. 13, 2013. FRA invites comments on the speed and operational restrictions discussed above and whether there are more appropriate alternatives to FRA's proposal.

FRA proposes to add the definition ''trainset, Tier I alternative passenger'' to mean a trainset consisting of Tier I passenger equipment designed under the requirements of appendix G to this part. FRA proposes to add this definition to distinguish specific Tier I trainset designs that conform to alternative standards from Tier I equipment that meets the existing Tier I requirements in subpart C but provide an equivalent level of protection by conforming with the proposed requirements of appendix G to this part.

FRA also proposes to add a new definition of ''trainset unit'' to mean that segment of a trainset located between connecting arrangements (articulations). This definition would clarify that the proposed requirements may apply to individual vehicles within a trainset consist, but not necessarily to the trainset as a whole.

Section 238.21 Special Approval Procedure

FRA proposes to amend paragraph (c)(2) of this section to be consistent with the changes proposed to § 238.201(b) for alternative compliance. The proposed applicable elements would be in new § 238.201(b)(1) rather than in § 238.201(b) due to the proposed reorganization of that section. FRA intends to conform paragraph (c)(2) of this section accordingly.

Additionally, FRA is updating the reference to ''Associate Administrator for Safety'' to read simply ''Associate Administrator,'' consistent with the discussion provided above under § 238.5.

Subpart B—Safety Planning and General Requirements

Section 238.111 Pre-Revenue Service Acceptance Testing Plan

FRA proposes to amend paragraphs (b)(2), (4), (5), and (7), and (c) of this section to require railroads to obtain FRA approval before using Tier III passenger equipment that either has not been used in revenue service in the U.S. or has been used in revenue service in the U.S. and is scheduled for a major upgrade or introduction of new technology that affects a safety system on such equipment. The explicit inclusion of a Tier III notification and approval process is consistent with FRA's approach to the implementation of high-speed rail technology. It also provides a formal mechanism for FRA to ensure all required elements of this part are satisfactorily addressed and documented.

FRA invites comment on FRA's proposed changes to this section. Specifically, we invite comment on any additional changes we should make concerning testing and approval requirements for Tier I, Tier II, or Tier III operations.

Subpart C—Specific Requirements for Tier I Passenger Equipment

Section 238.201 Scope/Alternative Compliance

In this section, FRA is proposing to redesignate existing paragraph (b) as paragraph (b)(1) and to add new paragraph (b)(2) due to the proposed addition of standards for alternative compliance in appendix G to this part.

Proposed paragraph (b)(1) would continue to provide the existing option for railroads to petition FRA's Associate Administrator for approval to use Tier I passenger equipment designed to alternative crashworthiness standards. This approval remains contingent upon the railroad's successful demonstration that such standards provide a level of safety at least equivalent to those in subpart C of this part. Although FRA is proposing to add a new appendix G to this part that provides specific alternative crashworthiness standards to those in subpart C, FRA does not intend to limit the flexibility this section currently provides for using other alternative designs.

Proposed new paragraph (b)(2) would explain how Tier I passenger trainsets may comply with the alternative crashworthiness and occupant protection requirements in appendix G to this part instead of the requirements

of §§ 238.203, 238.205, 238.207, 238.209(a), 238.211, 238.213, and 238.219. Railroads would be required to submit test plans and supporting documentation for FRA review and give FRA at least 30 days' notice before commencing any testing, whether partially or in full, to demonstrate compliance with the requirements of proposed appendix G to this part. Railroads would also be required to submit a carbody crashworthiness and occupant protection compliance report based on the analysis, calculations, and test data necessary to demonstrate compliance. After receipt of this report, FRA would deem the submission acceptable, unless FRA stays action within 60 days by written notice. If FRA stays action, then the railroad would be required to correct any deficiencies FRA identified and notify FRA it has corrected the deficiencies before placing the subject equipment into service. FRA may also impose conditions in writing necessary for safely operating the equipment for cause stated.

FRA notes that the proposed approval process would differ from that for Tier II or Tier III passenger equipment, which would require affirmative FRA approval. Tier I trainsets that FRA reviews under this paragraph would be deemed acceptable without further FRA action based on the appropriate submissions to FRA, unless FRA stays approval by written notice to the railroad. If FRA stays approval, FRA would then identify issues for clarification or resolution, as appropriate, which the railroad would be required to address and notify FRA it had corrected prior to placing the equipment into service.

FRA invites comment on the proposed changes to this section.

Section 238.203 Static End Strength

FRA proposes to revise this section to include a cross reference to § 238.201(b)(2) to reflect the proposed alternative standards in appendix G to this part for Tier I trainsets. Please note that the existing alternative compliance provision in § 238.201(b), which we propose to redesignate as § 238.201(b)(1), does not apply to the requirements of this section, unlike the other structural requirements. Hence, FRA is not proposing to reference § 238.201(b) generally in this section. However, FRA is not proposing to change the existing requirements of this section.

Section 238.205 Anti-Climbing Mechanism

FRA is proposing to revise this section to include a cross reference to § 238.201(b) to reflect the proposed alternative standards in appendix G to this part for Tier I trainsets. However, FRA is not proposing to change the existing requirements of this section.

Section 238.207 Link Between Coupling Mechanism and Carbody

FRA is proposing to revise paragraph (b) of this section to include a cross reference to § 238.201(b) to reflect the proposed alternative standards in appendix G to this part for Tier I trainsets. However, FRA is not proposing to change the existing requirements of this section.

Section 238.209 Forward End Structure of Locomotives, Including Cab Cars and MU Locomotives

FRA is proposing to revise this section to include a cross reference to § 238.201(b) to reflect the proposed alternative standards in appendix G to this part for Tier I trainsets. However, FRA is not proposing to change the existing requirements of this section.

Section 238.211 Collision Posts

FRA is proposing to revise this section to include a cross reference to § 238.201(b) to reflect the proposed alternative standards in appendix G to this part for Tier I trainsets. However, FRA is not proposing to change the existing requirements of this section.

Section 238.213 Corner Posts

FRA is proposing to revise this section to include a cross reference to § 238.201(b) to reflect the proposed alternative standards in appendix G to this part for Tier I trainsets. However, FRA is not proposing to change the existing requirements of this section.

Section 238.219 Truck-to-Car-Body Attachment

FRA is proposing to revise this section to include a cross reference to § 238.201(b) to reflect the proposed alternative standards in appendix G to this part for Tier I trainsets. However, FRA is not proposing to change the existing requirements of this section.

Subpart E—Specific Requirements for Tier II Passenger Equipment

Section 238.401 Scope

FRA proposes to revise this section to increase the maximum allowable speed for Tier II passenger equipment from 150 mph to 160 mph. This proposal is consistent with FRA's March 13, 2013, final rule amending and clarifying the Track Safety Standards, which affirmed that the maximum allowable speed on Class 8 track is 160 mph. See 78 FR 16052. Further, this proposal would make the speed range for Tier II passenger equipment consistent with that for Class 8 track in the Track Safety Standards. As specified in § 213.307 of this chapter, Class 8 track encompasses the speed range above 125 mph up to 160 mph—the same speed range for Tier II passenger equipment standards. This change would only increase the maximum operating speed to 160 mph and would still require FRA approval to do so as this part and other FRA safety regulations require.

For example, Amtrak's Acela Express currently operates at a maximum speed of 150 mph and has done so for well over a decade with FRA approval. While the proposed change would neither impose any new requirement on Acela Express, nor alter any aspect of FRA's regulatory approval of Acela Express, the rule would require FRA approval to increase the maximum operating speed to 160 mph.

FRA's Tier II passenger equipment safety standards are based on safety requirements developed for the operation of Amtrak passenger trainsets at speeds up to 150 mph on the Northeast Corridor (NEC). See 64 FR 25629. Amtrak sponsored a risk assessment of high-speed rail operations and FRA sponsored computer modeling to predict the performance of various equipment structural designs and configurations in collisions. The risk assessment found a significant risk of collisions at speeds below 20 mph and a risk of collisions at speeds exceeding 100 mph due to heavy and increasing conventional commuter rail traffic, freight rail traffic, highway-rail grade crossings, moveable bridges, and a history of low speed collisions in or near stations and rail yards. Based on the risk assessment and the results of the computer modeling, FRA determined that full reliance on collision avoidance measures rather than crashworthiness, though the hallmark of safe high-speed rail operations in several parts of the world, could not be implemented in corridors like the north end of the NEC. Traffic density patterns and right-of-way configurations would not permit implementation of the same collision avoidance measures that have proven successful in Europe and Japan. To compensate for the increased risk of a collision, a more crashworthy trainset design was needed. Accordingly, the structural requirements for Tier II passenger equipment are more stringent than those for Tier I passenger equipment or the design practice for North American passenger equipment or for high-speed rail equipment in other parts of the world.

Subpart F—Inspection, Testing, and Maintenance Requirements for Tier II Passenger Equipment

Section 238.501 Scope

FRA proposes to revise this section to increase the maximum allowable speed for Tier II passenger equipment from 150 mph to 160 mph. Please see the discussion of § 238.401.

Subpart H—Specific Requirements for Tier III Passenger Equipment

This proposed subpart would contain specific requirements Tier III passenger equipment must meet. Many of the requirements proposed herein consider Tier III passenger equipment in terms of an integrated trainset, particularly for purposes of crashworthiness and occupant protection requirements. This rule presumes that Tier III trainsets will consist of semi-permanently coupled, articulated, or otherwise ''fixed'' configurations, that are not intended to operate normally as individual vehicles or in mixed consists (with equipment of another design or operational tier).

The requirements proposed in this subpart are organized into subject areas based on their general applicability: trainset structure, window glazing, brake systems, interior fittings and surfaces, emergency systems, and cab equipment. These proposed requirements are intended to be applied in concert with proposed subparts I and J to establish a set of minimum safety requirements for Tier III passenger equipment that encourages a systemic approach to safety. FRA also intends that the requirements be applied in a manner that is performance-based and technology-neutral, where possible.

FRA intends to supplement these specific requirements in future rulemaking(s). As noted above, the ETF remains active and continues to address safety requirements for Tier III operations. FRA will consider regulatory changes and additions that will help FRA safely and efficiently implement Tier III operations from design, to entry into revenue service, to ongoing inspection and maintenance.

FRA notes that it intends for certain proposed sections of this subpart to be applied as an integrated set of alternative crashworthiness and occupant protection performance requirements for Tier I passenger equipment as delineated in appendix G to this part. We consider this set of proposed requirements to provide an equivalent level of safety to its counterpart set of Tier I requirements in subpart C of this part. As explained in greater detail in the discussion of appendix G below, the proposed rule clarifies which specific Tier III crashworthiness and occupant protection performance requirement should be applied as an alternative set of Tier I counterpart requirements. Specifically, FRA makes clear that if alternative Tier I compliance is sought under appendix G, then all the requirements in appendix G must be met so the integrity of the alternative requirements is maintained.

Section 238.701 Scope

This proposed subpart contains specific requirements for railroad passenger equipment operating in a shared right-of-way at speeds not exceeding 125 mph, and in an exclusive right-of-way without grade crossings at speeds exceeding 125 mph but not exceeding 220 mph. FRA believes that in most cases new exclusive rights-of-way designed for Tier III operations will be constructed without highway grade crossings. However, some newly constructed exclusive rights-of-way may include highway grade crossings, but may have long stretches of track without a grade crossing. In these instances, imposing a 125 mph speed restriction on the entire exclusive right-of-way may have greater costs than benefits. Additional net benefits may be achievable, in certain circumstances, by applying the speed restriction only to track at or near each grade crossing instead of the entire exclusive right-of-way. In such cases, FRA would expect the railroad to address the safety considerations surrounding highway grade crossings in the exclusive right-of-way in its Tier III Safe Operation Plan, which is subject to FRA review and approval. However, FRA invites comment on alternative approaches, such as whether the rule should include provisions that explicitly apply the speed restriction only to track located at or near each grade crossing within an exclusive right-of-way.

FRA is proposing to allow passenger seating in the leading unit of a Tier III trainset if safety issues associated with passengers occupying the leading unit are addressed and mitigated through a comprehensive Tier III Safe Operation Plan. Demonstration of compliance with the requirements of this subpart would be subject to FRA review and approval under § 238.111.

Trainset Structure

Section 238.703 Quasi-Static Compression Load Requirements

As discussed above, FRA proposes a two-step approach to OVI in this NPRM. Accordingly, in paragraph (a) of this section, FRA proposes that for it to consider a Tier III trainset to have sufficient OVI, compliance with the requirements of both paragraph (b) of this section and § 238.705 must be demonstrated. The purpose of applying both requirements is to ensure the integrity of the occupied volume during a collision or other accident. Integrity of the occupied volume is a fundamental requirement of crashworthiness—the primary goal of which is preservation of space to protect occupants during an accident. Additionally, a strong OVI serves as the foundation for other crashworthiness features such as CEM components.

Although the language of this section references only Tier III trainsets, the requirements of this section may also be applied to Tier I trainsets through the application of appendix G, instead of complying with the existing requirements of 49 CFR 238.203, ''Static end strength.'' Tier I passenger equipment designed to alternative crashworthiness standards may demonstrate an appropriate level of crashworthiness by complying with the quasi-static compression load requirements proposed in § 238.703(b). In general, § 238.203 requires all passenger equipment to support an 800,000-pound compressive load along its line-of-draft without experiencing permanent deformation. This magnitude of load applied to the line-of-draft has been the longstanding practice in the U.S. This evaluation is readily performed on passenger equipment conventionally designed for service in the U.S. For vehicles designed less conventionally or alternatively (*e.g.,* articulated trainsets, full or partial low-floor trainsets, and trainsets utilizing CEM), the structure of the occupied volume may be designed so that collision loads are not transmitted along the line-of-draft. While a rail vehicle may be designed to carry normal, longitudinal service loads along its line-of-draft, the more severe collision loads may be introduced into the structure differently. Below is a discussion of the quasi-static compression load requirements proposed in paragraph (b) that would apply to each vehicle of a Tier III trainset, and, if elected, as an alternative for Tier I trainsets, through application of appendix G.

Proposed paragraph (b)(1) introduces three means of compliance, each consisting of a prescribed load magnitude and a corresponding pass/fail criterion (or pass/fail criteria), and states that each vehicle under evaluation must comply with one of three compression load pass/fail criteria enumerated in paragraphs (b)(1)(i)–(iii). FRA notes that this paragraph (b)(1)

applies to evaluation of individual vehicles of a trainset, not a trainset as a whole. Additionally, FRA is not proposing to require using all three alternatives to evaluate a vehicle; FRA would require only demonstration that the vehicle design complies with one compression load pass/fail criterion. By including three sets of load magnitudes and pass/fail criteria, FRA intends to accommodate quasi-static compression load evaluation for a variety of passenger trainset vehicle designs and ensure that each alternative provides an equivalent level of safety.

For each of the three quasi-static compression load requirements that may be applied, the evaluation loads are introduced not at the line-of-draft, but at the ends of the collision load path through the occupied volume. Introducing the loads along the collision load path permits evaluation of the quasi-static compression resistance of a given design in a manner more representative of the type of loading the occupied volume would experience in a collision. The details of the location(s) of the load points at the ends of the collision load path would be determined on a design-by-design basis.

The proposed quasi-static compression load requirements also permit use of a combination of elastic testing and elastic/plastic computer simulation to demonstrate a trainset's ability to comply with one of the three requirements. While an analysis of a properly-executed, finite-element (FE) computer simulation can demonstrate a design's compliance, some structural testing of the actual occupied volume undergoing evaluation is needed to validate the results the computer simulation produced. The process of validation essentially provides a computer simulation with a foundation in reality.

A detailed FE model of the carbody undergoing evaluation is necessary to properly capture the structural response of the occupied volume to the evaluation compression loads. FRA expects this model will include all the structural members and connections that comprise the occupied volume. If the carbody structure is symmetric from side to side, a symmetry boundary condition may be used to facilitate efficient model evaluation. Certain details of the carbody structure that do not directly affect the OVI, such as couplers and designated CEM components, may be omitted from the OVI model.

FRA also expects the material properties (*e.g.,* stress-strain characteristics) that are used in the model would be derived from either manufacturer-certified minimum properties or from tests conducted on the actual construction materials. Material properties may be assumed to be independent of the rate of deformation for the purposes of OVI evaluation. Failure modeling of connections (*e.g.,* welds, rivets, bolts, etc.) would not be required if the analysis does not indicate critical stresses or strains near those connections.

Appropriate boundary conditions must be chosen to provide reasonable restraint to the model. FRA expects that vertical support to the model would be provided at the locations in the actual vehicle where it would carry vertical loads. Typically, those locations include the attachments of the secondary suspension components to the underframe and, if the car is so equipped, the articulation. Longitudinal restraint in the model may be accomplished by a rigid wall that is in contact with the reaction-end of the vehicle structure. Lateral restraint may either be introduced through a symmetry boundary condition or by applying a reasonable coefficient of friction between the longitudinal restraint wall and the body structure.

Proposed paragraph (b)(1)(i) provides that the first load magnitude and corresponding pass/fail criterion is an 800,000-pound compression load applied to the collision load path without causing any permanent deformation to the occupied volume. The load magnitude (800,000 pounds) is the same as the evaluation load generally required in existing § 238.203 for Tier I passenger equipment but would be introduced into the occupied volume along the collision load path (whether or not that is the line-of-draft). The pass/fail criterion of no permanent deformation would be the same as the pass/fail criterion in existing § 238.203.

Proposed paragraph (b)(1)(ii) provides that the second load magnitude and corresponding pass/fail test is a 1,000,000-pound compression load applied to the collision load path without exceeding either of two pass/fail criteria. Under this proposal, both pass/fail criteria must be met for a design to successfully meet this quasi-static compression load requirement, which would increase the evaluation load by 25 percent over the conventional 800,000-pound load. As a consequence of applying a more severe load, FRA would relax the pass/fail criteria to permit small areas of plastic strain to develop within the structure. Thus, the first pass/fail criterion in proposed paragraph (b)(1)(ii)(A) states that local plastic strains that may develop anywhere within a model may not exceed 5 percent. This pass/fail criterion would be applied to the entire structure of the vehicle undergoing evaluation. The second pass/fail criterion in proposed paragraph (b)(1)(ii)(B) states that local shortening (deformation) of the vehicle may not exceed 1 percent over any 15-foot length of the occupied volume. This criterion is intended to prevent localized loss of occupied volume that may occur when the 5-percent plastic strain criterion is not exceeded.

Paragraph (b)(1)(iii) provides that the third load magnitude and corresponding pass/fail criterion is a 1,200,000 pound compression load applied to the collision load path without exceeding the crippling strength of the vehicle. This paragraph would define crippling as the maximum point on the load-versus-displacement characteristic. The load magnitude required by this quasi-static compression load requirement would be 50 percent higher than the 800,000-pound load required by existing § 238.203, which also requires that the carbody must remain elastic to successfully meet the requirement. Because the evaluation load would be increased by 50 percent, the corresponding pass-fail criterion would require that the vehicle being evaluated have an ultimate load carrying capacity (*i.e.,* crippling resistance) equal to or greater than 1.2 million pounds. To determine the adequacy of the proposed ultimate load, in June 2011, FRA performed a series of quasi-static compression tests on passenger railcars compliant with § 238.203 and verified that these cars had an ultimate load capacity of approximately 1.2 million pounds. This testing series established that 1.2 million pounds is a reasonable minimum standard for the crippling strength of passenger equipment compliant with § 238.203. The results of that testing and corresponding FE modeling are summarized in an FRA ''Research Results'' report,[13] two technical papers,[14] and an FRA final report.[15]

[13] USDOT/FRA, ''Occupant Volume Integrity Evaluation in Passenger Railcars.'' *Research Results*—Office of Railroad Policy and Development, RR 12–01, February 2012.

[14] Carolan, M., Muhlanger, M., Perlman, B., and Tyrell, D., ''Occupied Volume Integrity Testing: Elastic Test Results and Analyses,'' American Society of Mechanical Engineers, Paper No. RTDF2011–67010, September, 2011; Carolan, M., Perlman, B., and Tyrell, D., ''Crippling Test of a Budd Pioneer Passenger Car,'' American Society of Mechanical Engineers, Paper No. JRC2012–74087, April 2012.

[15] Carolan, M., Perlman, B., and Tyrell, D., ''Alternative Occupied Volume Integrity (OVI) Tests and Analyses,'' U.S. Department of Transportation, DOT/FRA/ORD–13/46, October 2013.

Demonstration of compliance with any of the quasi-static requirements may be achieved through testing to the specified load or a combination of elastic testing and plastic analysis. Paragraph (b)(2) would establish that, at a minimum, an end compression load of no less than 337,000 pound-force (lbf) must be applied to the carbody structure to validate the plastic analysis. In addition, these requirements would establish the minimum level of model validation to be performed using the results of a test of the same design. Nonetheless, FRA does not intend for these proposed minimum requirements to replace sound engineering judgment that higher force values may be appropriate to obtain valid test results when designing and performing the compression testing and FE modeling.

Because paragraphs (b)(1)(ii) and (iii) would permit permanent deformation to occur in the occupied volume of a vehicle during its evaluation, it is likely a combination of elastic (*i.e.,* non-destructive) testing and elastic-plastic finite element analysis (FEA) would be used to demonstrate a vehicle design's ability to meet either of those two quasi-static compression load requirements. While paragraph (b)(1)(i) would not permit permanent deformation to occur in a design undergoing evaluation, FRA does not intend for the proposed rule to prevent a combination of elastic testing to a load less than 800,000 lbs and FEA up to the target load of 800,000 lbs from being used to demonstrate that a design's OVI complies with this first requirement.

As previously discussed, proposed paragraph (b)(2) states that, no matter which of the three requirements that is chosen for evaluation of a design's OVI is applied, a compression test also must be performed and the applied longitudinal compression load must be at least 337,000 lbf (1500kN). This test is required to ensure the FE computer model that is used to demonstrate alternative compliance can successfully model the response of the carbody to the same loading condition as part of a program of model validation. This value is equal to 1500 kN, which is the compression load placed on the coupler support structures required by European standard EN 12663 for Category P–II passenger equipment. The ETF recommended this minimum value for the validation test's elastic load and FRA adopted this minimum recognizing that sufficient strains must be developed within the tested structure to provide quality measurements necessary for validating a model.

Finally, proposed paragraph (b)(3) states that compliance with paragraph (b) of this section must be documented and submitted to FRA for review and approval. In particular, we propose several options for compliance with paragraph (b)(1), and FRA review and approval is necessary to evaluate the approach taken to ensure compliance.

Section 238.705 Dynamic Collision Scenario

In this section, FRA is proposing to introduce a dynamic collision scenario analysis as the second part of the OVI evaluation of a Tier III passenger trainset. PTC technology cannot protect against all possible collision scenarios, such as collisions with trespassing highway equipment at grade crossings or with other rolling stock (freight or passenger equipment) during manual operations at 20 mph or below. Accordingly, compliance with this requirement is necessary to preserve the occupied volume, protecting all occupants on the trainset.

As mentioned in the discussion of proposed § 238.703 above, each vehicle in the trainset would need to demonstrate it meets both the OVI requirements in proposed paragraph (b) of that section and the dynamic collision scenario requirements in proposed paragraph (b) of this section. Further, as mentioned in the discussion of proposed § 238.703, and as outlined in proposed appendix G, a Tier I passenger trainset designed to alternative crashworthiness standards may comply with this section instead of the requirements currently applicable to Tier I passenger trainsets in § 238.203.

In combination with the quasi-static compression load requirements discussed in proposed § 238.703, the purpose of this proposed dynamic collision scenario requirement is to ensure that survivable space for the passengers and crew is preserved in up to moderately severe accident conditions (*i.e.,* conditions comparable to a head-on collision at a speed of 20 to 25 mph, depending on the type of equipment, into a stationary train). This requirement would also provide a baseline level of protection for scenarios that may be more severe, but less predictable with respect to loading conditions and historical accident data. Although the dynamic collision scenario would be conducted at the trainset level, the requirements described in this section would be evaluated at the level of the trainset's individual vehicles so no vehicle in the trainset may exceed the parameters outlined in proposed paragraph (b) as a result of the dynamic collision scenario.

Proposed paragraph (a) outlines the required conditions under which a dynamic collision scenario would be performed. Generally, the collision scenario requires a dynamic impact to be simulated between two trains: An initially-moving train and an initially-standing train. The initially-moving train is the trainset undergoing evaluation, either Tier III equipment or, as provided in appendix G, Tier I equipment designed to alternative crashworthiness standards. The initially-standing train is a locomotive-led consist of five conventionally-designed passenger cars. The conventionally-designed passenger cars have a prescribed weight and force-versus-displacement characteristic.[16] The pass/fail criteria for the scenario determine whether there is sufficient preservation of occupied volume for passengers and crew in the trainset undergoing evaluation.

FRA expects the collision scenario would be executed for an impact duration sufficient to capture the most severe portion of the collision event. The actual amount of impact time required to simulate the collision sufficiently would vary based upon the characteristics of the trainset undergoing evaluation. Typically, the collision scenario would be executed until all of the equipment, including the initially-standing and initially-moving consists, is moving in the same direction at approximately the same velocity. If all of the equipment is moving together at approximately the same speed, no further car-to-car impacts would occur, and the simulation would have been executed for a sufficient duration to capture the most severe decelerations.

There are various types of analyses that may be used to evaluate the collision scenario requirements. These analyses include fully-detailed FE models, lumped-parameter analyses, or a hybrid approach where a combination of detailed FE modeling and lumped-parameter techniques are used within the same simulation. An FEA of the scenario is generally a highly-detailed simulation of the actual trainset geometry. The parts making up the trainset are meshed into a large number of elements, with each element having its own mass, stiffness, and connection properties to the adjacent elements. A lumped parameter analysis represents each car or section of a car within a trainset using a small number of masses and a small number of non-linear springs. At its extreme, each car consists

[16] Appropriate weights and force-versus-displacement characteristics for the conventionally-designed passenger cars can be found in the Technical Criteria and Procedures Report.

of a single mass and a single spring characteristic. A hybrid approach may utilize an FE mesh to represent some structures (*e.g.,* CEM structures that undergo large deformations) and lumped-parameter representations of other structures (*e.g.,* cars far from the impacting interface that experience little deformation). Any of the three types of analyses is capable of developing the information needed to verify a trainset's ability to meet the requirements of the collision scenario. Additionally, because the centerlines of the initially-moving and initially-standing trains are aligned with one another during this scenario, a half-symmetric model may be used to represent the colliding vehicles, as appropriate.

Proposed paragraph (a)(1) requires the initially-moving train to be made up of the equipment undergoing evaluation at its empty, ready-to-run (AW0) weight.[17] As highlighted above, this equipment can be either Tier III equipment or, under appendix G, Tier I equipment designed to alternative crashworthiness standards.

Proposed paragraph (a)(2) states that if the length of consists to be used in service can vary, then the longest and shortest consist lengths must both be evaluated under this section. This requirement is intended to ensure the trainset's OVI is satisfactory when operated in both the shortest and longest train consists that will be utilized in service. The trainset undergoing evaluation must successfully meet the collision scenario requirements for both its shortest and longest configurations; it is not required to demonstrate other configurations meet the requirements.

Proposed paragraph (a)(3) states that if the trainset is intended for use in push-pull service, then both the locomotive-led and cab-car-led configurations shall be evaluated separately. This requirement is intended to ensure sufficient OVI for all occupied spaces in the trainset regardless of whether it is led by a cab car or a conventional locomotive.

Proposed paragraph (a)(4) describes the configuration of the initially-standing train of conventional passenger equipment. As provided in paragraph (a)(4)(i), this train is to be led by a rigid locomotive weighing 260,000 pounds and also made up of five identical coaches, each having a weight of 95,000 pounds. Paragraph (a)(4)(ii) provides that the locomotive and each passenger coach crush in response to applied force as specified in Table 1 to this section. Table 1 provides the non-linear, force-versus-crush relationship for the passenger cars and locomotive comprising the initially-standing train. These relationships are meant to be representative of typical crush responses for passenger equipment; likewise, the weights given for the conventional locomotive and conventional passenger cars are meant to be representative of typical weights for passenger equipment. The weights for the passenger cars and locomotives, the force-versus-crush behavior, and the geometry for the standing locomotive are all provided in the Technical Criteria and Procedures Report. Further detail on the geometry of the locomotive can be found in that Report. In addition, paragraph (a)(4)(iii) provides that the locomotive would be modeled using the data inputs listed in appendix H to this part, so that the locomotive's geometric design is as depicted in Figure 1 to appendix H.

Proposed paragraphs (a)(5) through (10) are meant to ensure that the collision scenario is evaluated under the same conditions by each entity performing this type of evaluation. Proposed paragraph (a)(5) explains that the scenario must be evaluated on tangent, level track.

Proposed paragraph (a)(6) describes the initial velocities to be assigned to the initially-moving consist. If the initially-moving consist is led by a cab car or an MU locomotive, then it must have an initial velocity of 20 mph. If the initially-moving consist is led by a conventional locomotive, it must have an initial velocity of 25 mph. These speeds were chosen based upon estimates of the upper limit of the ability of conventionally-designed Tier I equipment to maintain its occupied volume in a similar collision scenario.

FRA intends for the requirements in proposed paragraphs (a)(7) through (9) to simplify the modeling of the collision scenario and to help ensure the scenario is evaluated consistently by different entities. Paragraph (a)(7) provides that the coupler knuckles on the impacting equipment shall be closed. Paragraph (a)(8) states that the moving and standing consists are not braked. Paragraph (a)(9) states that the initially-standing train is free to move only in the longitudinal direction.

Proposed paragraph (a)(10) would require that the model used to demonstrate compliance with the dynamic collision requirements be validated, and that model validation be documented and submitted to FRA for review and approval. Regardless of the type of analysis employed to demonstrate a trainset's ability to meet the collision scenario requirements, the analytical model must undergo some level of validation for the results to be considered acceptable. The validation to be performed on the model used in the collision scenario would be in addition to any validation required for a model used to demonstrate the quasi-static OVI of the trainset undergoing evaluation. While full-scale destructive testing of a trainset undergoing evaluation is not expected, FRA expects that any designated energy-absorbing components will be tested at the component-level. The results of these component tests would be used to validate a model of the same type to be used to demonstrate the trainset's ability to meet the dynamic collision scenario. FRA also expects that any components that experience large deflection or permanent deformation during the modeling of the collision must be validated with some type of physical test.

Proposed paragraph (b) would contain the crashworthiness and occupant protection performance requirements the individual vehicles in the initially-moving trainset involved in the dynamic collision scenario must meet as described in paragraph (a)—*i.e.,* the trainset undergoing evaluation. Proposed paragraph (b)(1) outlines two conditions for demonstrating that the initially-moving trainset possesses sufficient crashworthiness to resist a significant loss of occupied volume during the collision scenario. Only one of the two performance conditions would have to be shown to be met to successfully demonstrate compliance: No more than 10 inches of longitudinal, permanent deformation of the occupied volume as a result of the impact, as proposed in paragraph (b)(1)(i); or global vehicle shortening not exceeding 1 percent over any 15-foot length of the occupied volume, as proposed in paragraph (b)(1)(ii). These two performance conditions are meant to permit different analysis techniques (*e.g.,* lumped-parameter or FEA) to be applied to evaluate the collision scenario.

Proposed paragraph (b)(2) provides that if the option to use GM/RT2100 is exercised to demonstrate compliance with any of the requirements in §§ 238.733, 238.735, 238.737, or 238.743, then the average longitudinal deceleration of the center of gravity (CG) of each vehicle during the dynamic collision scenario shall not exceed 5g in any 100-millisecond (ms) time period. A plot of the 100-ms average longitudinal deceleration versus time, in which the

[17] ''AW0'' is a loading designation that is defined by the manufacturer. Specifically, AW0 refers to the ''actual weight'' of an empty vehicle. The phrase ''empty, ready-to-run weight'' is typically how this designation is defined in a technical document.

curve never exceeds ±5g, would suffice to demonstrate compliance with paragraph (b)(2).

Proposed paragraph (b)(3) sets out the criteria that must be met to demonstrate the crashworthiness of the engineer's cab as a result of the dynamic collision impact. Paragraph (b)(3)(i) states that a survival space where there is no intrusion must be maintained around each seat in the cab. Survival space is defined as extending a minimum of 12 inches from each edge of the seat. Walls or other items originally within this defined space, not including the operating console, shall not further intrude more than 1.5 inches towards the seat under evaluation.

In addition, as a result of the impact, under paragraph (b)(3)(ii), there shall be a clear exit path from the cab for the occupants, and, under paragraph (b)(3)(iii), the vertical height of the compartment shall not be reduced by more than 20 percent. FRA intends for proposed paragraph (b)(3)(iii) to prevent loss of occupied volume that occurs either through lifting of the floor or downward buckling of the ceiling.

Further, proposed paragraph (b)(3)(iv) provides that the operating console shall not have moved closer to the engineer's seat by more than 2 inches as a result of the impact. Because portions of the operating console in a given cab may originally be within the 12-inch survival space defined in paragraph (b)(3)(i) before the impact, it is important that the console not move more than 2 inches closer to the engineer's seat and impede the engineer from exiting the cab following the impact. The allowable encroachment for the operating console is one-third larger than the 1.5 inches allowed for walls or other items originally within the 12-inch survival space. This larger allowance assumes the initial configuration is designed so there is sufficient space for the engineer to readily get into and out of his or her seat, as well as space to comfortably situate himself or herself for normal operation of the train. Consequently, console movement of 2 inches or less can be allowed without inhibiting or preventing egress. If the engineer's seat is part of a set of adjacent seats, the requirements of this paragraph (b)(iv) would apply to both seats. This seating arrangement is in the cabs of Amtrak's Acela Express trainsets.

Section 238.707 Override Protection

This proposed section would contain the requirements for analyzing the ability of a Tier III passenger trainset to resist vertical climbing or override at its collision interface locations during a dynamic collision scenario. This proposed section would examine the vertical displacement behavior of colliding equipment under an ideal impact scenario where an initially-moving Tier III trainset and an initially-standing conventional train are aligned. This section would also prescribe an impact scenario where the interface of the colliding equipment is translated both laterally and vertically by 3 inches to ensure that override is resisted during an impact when the two trains are not perfectly aligned. Evaluating the colliding equipment's ability to resist override in an offset impact condition helps to demonstrate that the override features are robust.

FRA clarifies that Tier III passenger trainsets would have to comply with both paragraphs (a) and (b) of this section. FRA also clarifies that under proposed appendix G, a Tier I passenger trainset designed to alternative crashworthiness standards may demonstrate an appropriate level of override protection by complying with the requirements this section proposes instead of complying with the requirements applicable to Tier I passenger trainsets in § 238.205, Anti-climbing mechanism, and § 238.207, Link between coupling mechanism and car body. In general, the requirements proposed in this section were developed as an alternative to demonstrating anti-climbing capabilities in current § 238.205 and the capability of the link between the coupling mechanism and carbody to resist the loads in current § 238.207. While compliance with both §§ 238.205 and 238.207 requires meeting a set of quasi-static, vertical load cases, the requirements proposed in this section were developed as a dynamic performance standard.

Proposed paragraph (a)(1) contains two sets of initial conditions for analyzing the ability of the evaluated trainset to resist vertical climbing or override during a dynamic collision scenario, and states these conditions must be applied using the dynamic collision scenario in proposed § 238.705(a). Criteria for evaluating the dynamic collision scenario for each set of initial conditions are provided in proposed paragraph (a)(2). Because the same model may be used both to demonstrate compliance with the requirements of § 238.705 and the requirements of paragraphs (a) and (b) of this section, the model must be validated with test data in such a way as to provide confidence in the validity of the results of the collision analyses. In this regard, if the components that experience large deflection or permanent deformation in the analysis described in § 238.705 also experience large deflection or permanent deformation in the analysis described in paragraph (a)(2) of this section, then the same test results may be used to validate the model. If the performance of the components that undergo large deformation in the analysis described in paragraph (a)(2) of this section is not validated with test data as part of the validation of the model used in § 238.705, then additional validation testing must be performed to validate the model being used to demonstrate performance under paragraph (a)(2).

Proposed paragraph (a)(1)(i) describes the first condition to be used in the collision simulation to demonstrate anti-climbing performance. This paragraph provides that all vehicles in both the initially-moving and the initially-standing train consists must be positioned at their nominal running heights with the centerlines of the initially-moving and initially-standing trains aligned. Because the centerlines of the colliding vehicles would be aligned with one another, a longitudinally half-symmetric model may be used to simulate this collision scenario, as appropriate. FRA intends for this initial condition to represent an ideal collision situation where the colliding vehicles are initially aligned with one another.

Proposed paragraph (a)(1)(ii) describes the second condition to be used in the collision simulation as a 3-inch lateral and 3-inch vertical offset of the interface of the colliding equipment. The lateral and vertical offsets must be applied simultaneously in the same simulation. Evaluating the equipment offset in this manner will demonstrate that the anti-climb features are of a robust design, capable of preventing climbing when the colliding vehicles are not perfectly aligned. Because this simulation requires a lateral offset between the initially-standing and initially-moving consists, a symmetric boundary condition may not be employed (*i.e.,* the full width of each consist must be modeled).

Proposed paragraph (a)(2) explains the pass/fail criteria that must be successfully met to demonstrate a trainset possesses adequate anti-climb features for its colliding interface. The criteria must be met for each set of initial conditions in paragraphs (a)(1)(i) and (ii) for demonstrating appropriate resistance to override between colliding equipment. Paragraph (a)(2)(i) would provide that the relative difference in elevation of the underframes between the colliding equipment in the initially-moving and initially-standing train consists may not change by more than 4 inches at any point during the

simulation. Because the initially-standing consist is permitted only longitudinal motion under § 238.705(a)(9), no vehicle in the initially-standing consist will experience any vertical motion. Thus, the change in elevation of the initially-moving trainset's underframe would be measured relative to the underframe of the initially-standing consist. To evaluate this scenario properly, the collision simulation must be run until all vehicles in the initially-moving and the initially-standing consists are moving in the same direction at approximately the same velocity.

Proposed paragraph (a)(2)(ii) contains the second pass/fail criterion to be met to demonstrate resistance to override between colliding equipment. No tread of any wheel of the first vehicle of the initially-moving consist may rise above the top of the rail by more than 4 inches. This condition must be evaluated throughout the duration of the collision simulation, not only at the end of the collision. To evaluate this scenario properly, the collision simulation must be executed until all vehicles in the initially-moving and the initially-standing train consists are moving in the same direction at approximately the same velocity.

Proposed paragraph (b) contains the evaluation methodology for demonstrating the appropriate level of override protection for connected equipment in a Tier III trainset. This paragraph would examine the vertical displacement behavior of coupled equipment under an ideal impact scenario where the vehicles within the initially-moving train are aligned. It also would prescribe an impact scenario where the first coupled interface of the initially-moving train is translated both laterally and vertically by 2 inches. Evaluating the connected equipment's ability to resist override in an offset impact condition is necessary to demonstrate the override features are robust and can resist override during an impact where the coupled vehicles are not perfectly aligned.

Proposed paragraph (b)(1) explains the conditions for analyzing the ability of connected equipment to resist vertical climbing or override at the coupled interfaces during a dynamic collision scenario, using the scenario described in § 238.705(a). Like paragraph (a) of this section, each set of conditions in paragraphs (b)(1)(i) and (ii) must be evaluated independently. Criteria for evaluating the dynamic collision scenario for each set of conditions are in paragraph (b)(2). As noted in the discussion of paragraph (a), because the same model may be used to demonstrate compliance with the requirements of § 238.705 and the requirements of this section, the model must be validated with test data in a way that provides confidence in the validity of the results of the collision analyses. The discussion of model validation in paragraph (a) applies equally to model validation for purposes of paragraph (b).

Proposed paragraph (b)(1)(i) describes the first condition to be used for collision simulation to demonstrate override protection for connected equipment. This paragraph provides that all vehicles in both the initially-moving and the initially-standing train consists must be positioned at their nominal running heights, with the centerlines of the initially-moving and initially-standing trains aligned. Because the centerlines of the colliding vehicles would be aligned with one another, a longitudinally half-symmetric model may be used to simulate this collision scenario, as appropriate. This initial condition is meant to represent an ideal collision situation where the colliding vehicles are initially aligned with one another.

Proposed paragraph (b)(1)(ii) would explain that the second condition to be used in the collision simulation is a 2-inch lateral and 2-inch vertical offset of the first connected interface between vehicles in the initially-moving train. The lateral and vertical offsets must be applied simultaneously in the same simulation. Evaluating the equipment offset in this manner would demonstrate that the anti-climb features are of a robust design that would prevent climbing when the vehicles in the initially-moving trainset are not perfectly aligned. Because this simulation requires a lateral offset between the vehicles of the initially-moving consist, a symmetric boundary condition may not be used (*i.e.,* the full width of each consist must be modeled).

Proposed paragraph (b)(2) sets out the pass/fail criteria that must be successfully met to demonstrate a Tier III trainset possesses adequate anti-climb features to protect the vehicles connected in the trainset from overriding each other. The criteria must be met for each set of initial conditions provided in paragraphs (b)(1)(i) and (ii) to demonstrate appropriate resistance to override between connected equipment. Proposed paragraph (b)(2)(i) would provide that the relative difference in elevation of the underframes between the connected equipment in the initially-moving train may not change by more than 4 inches at any point during the simulation. To evaluate this scenario properly, the simulation must be run until all vehicles in the initially-moving and the initially-standing consists are moving in the same direction at approximately the same velocity.

The 4-inch vertical difference in paragraph (b)(2)(i) is a pass/fail criterion and must be measured relative to the initial heights of the connected equipment. A change in underframe height in excess of 4 inches would indicate one of the two connected vehicles has begun to climb and override the other.

Proposed paragraph (b)(2)(ii) contains the second pass/fail criterion to be met to demonstrate resistance to override between connected equipment. No tread of any wheel of the initially-moving train may rise above the top of the rail by more than 4 inches. This condition may not be exceeded at any point during the simulation. To evaluate this scenario properly, the simulation must be executed until all vehicles in the initially-moving and the initially-standing consists are moving in the same direction at approximately the same velocity.

Section 238.709 Fluid Entry Inhibition

This section proposes requirements for fluid entry inhibition for the skin covering the forward-facing end of a Tier III trainset. The proposed requirements are largely the same as those in § 238.209(a) for Tier I locomotives, including MU locomotives and cab cars. Section 238.209(a) requires that the front end of a Tier I locomotive be covered by a skin equivalent to a half-inch-thick, 25-kilopound-per-square-inch (ksi) steel plate to prevent the entry of fluids into the locomotive cab in the event of a collision. While that specific requirement is easily applied to conventional designs, many of which may still make use of steel sheets for the outer skin, it is more difficult to apply to the complex, aerodynamic shapes of modern passenger trainset front ends, which often are comprised of various structures, including crash energy management elements. Because the consideration of aerodynamics and crash energy management is significant, this section proposes to account for the use of more modern designs and materials to construct a passenger trainset front end so it can be evaluated effectively.

FRA notes that, while this section focuses on the prevention of fluid entry, it also establishes a minimum level of penetration resistance that may be applied more generally. Because this section is based on § 238.209(a), which identifies two important carbody

characteristics for the protection of cab occupants in conventional equipment designs, material thickness and strength, this section offers protection for more hazards than the entry of fluid alone.

Specifically, proposed paragraph (a)(1) provides that the skin covering the front-end structure of a Tier III trainset must maintain a resistance to penetration into the cab equivalent to that of the half-inch-thick sheet of 25-ksi steel plate, as required by § 238.209(a)(1)(i) for Tier I locomotives. This may be achieved using an outer skin of an equivalent strength; a combination of materials between the engineer and the outside environment; or a composite material of a lesser thickness, if an equivalent level of penetration resistance is maintained. To demonstrate compliance, the sum of the thicknesses and material strength of all elements (*e.g.,* skin and structural elements) may be considered, when measured from the structural leading edge of the trainset up to, and including, the interior structural wall of the cab at its weakest location, when projected onto a vertical plane, just forward of the engineer's normal operating position.

By permitting additional methods to achieve equivalent penetration resistance, FRA recognizes that even though most modern designs may make use of lighter weight materials for aerodynamic skins (*e.g.,* aluminum, fiberglass), it does not imply that the protection provided is any less substantial. In fact, the combination of skin, structure, and crash energy management features in front of the engineer may actually provide more protection than the half-inch-thick, 25-ksi steel plate. It is important to note, however, that FRA intends for the performance requirement in this paragraph to be evaluated laterally across the entire width of the cab, including all carbody structures just forward of the engineer's normal operating position. This would demonstrate protection equivalent to that provided by the referenced steel plate exists across the entire width of the cab when projected in front of the engineer. Non-structural elements or features, such as the operating console and insulation materials, would not be taken into account in demonstrating compliance.

Proposed paragraph (a)(2) is derived from the existing requirement for fluid entry inhibition for Tier I locomotives in § 238.209(a)(1)(ii). It would also be applied so it is consistent with the design of modern passenger trainset front end structures. This recognizes that various techniques may be employed to provide fluid entry inhibition characteristics, particularly through the use of flexible and impermeable materials.

Proposed paragraph (a)(3) would complement the requirements of paragraph (a)(1) by prescribing that the required front-end protective skin (or its equivalent) be affixed to the main structural members (*e.g.,* collision and corner posts) to ensure the integrity of the overall front-end structure. In this regard, FRA makes clear that the requirement for front-end protective skin (or its equivalent) is independent of the requirements proposed for the other structural features at the front end of the trainset—and indeed provides an additional layer of protection. Proposed paragraph (a)(3) is also derived from the existing requirement for Tier I locomotives in § 238.209(a)(1)(iii).

Since this section expressly provides flexibility to demonstrate compliance, it inherently allows various means of compliance that could be considered acceptable. Consequently, proposed paragraph (b) would require that, at a minimum, detailed structural drawings be submitted for FRA review, with pertinent calculations to demonstrate compliance with the requirements of paragraph (a) of this section. FRA believes it is necessary to provide such detail on how the requirements of paragraph (a) are to be met given the expected use of front-end protection in Tier III trainsets equivalent to the steel plate specified in paragraph (a), and in Tier I trainsets designed to alternative crashworthiness standards, as provided in proposed appendix G.

FRA is not aware of any international standard regarding fluid entry inhibition. These proposed requirements are necessary to protect the occupied volume because of the front end structure of Tier I and Tier III equipment as this location is vulnerable in a highway grade crossing collision if a fuel tank that is part of or being transported by the highway vehicle ruptures. See 64 FR 25540. However, equipment designed to international standards may be able to meet this requirement as designed, without modification, due to the large structure that is usually present on the leading ends of the equipment. FRA invites comment on this proposed section and specifically on whether application of the proposed requirements is clear.

Section 238.711 End Structure Integrity of Cab End

In this section, FRA proposes requirements to ensure the structure of cab ends for Tier III trainsets (and Tier I trainsets designed to alternative crashworthiness standards, under proposed appendix G) provides a minimum level of protection for the engineer and other cab occupants, equivalent to the collision post and corner post requirements for Tier I equipment in subpart C of this part. Accident history shows the occupied volume can be penetrated by large, blunt objects that contact the end structure, particularly in grade crossing collisions, threatening the safety of the crew and other occupants. For such collision scenarios, the end structure can be designed to act as an integrated structure, absorbing energy as it deforms to provide increased occupied volume protection.

Specifically, FRA is proposing to cross-reference the requirements of appendix F to this part, Alternative Dynamic Performance Requirements for Front End Structures of Cab Cars and MU Locomotives. FRA added appendix F to this part in the final rule on Passenger Equipment Safety Standards; Front End Strength of Cab Cars and Multiple-Unit Locomotives. See 75 FR 1180, Jan. 8, 2010. In particular, these dynamic performance requirements facilitate testing of end frame designs without readily identifiable collision or corner post structures. They provide an option to demonstrate the dynamic performance of front end structures when impacting a rigid object, instead of the static load testing requirements prescribed in §§ 238.211 and 238.213 for collision posts and corner posts, respectively. These dynamic performance requirements do not prescribe the strength of the main structural members (*i.e.,* collision posts and corner posts), but rather prescribe energy absorption requirements for the end structure in grade crossing collision scenarios. Instead of focusing on whether an individual collision post or corner post structure is capable of resisting the applied loads, the focus is more appropriately placed on the ability of the end frame structure as an integrated whole to withstand collisions. The collision scenarios can be evaluated through the use of FEA, or testing, or both. The requirements are performance-based and each must be evaluated using a prescribed collision scenario of a rigid object impacting the end structure.

Section 238.713 End Structure Integrity of Non-Cab End

In this section, FRA proposes requirements to ensure the structure of the non-cab ends of Tier III trainsets (and Tier I trainsets designed to alternative crashworthiness standards under proposed appendix G to this part) provides a minimum level of protection

for occupants equivalent to that required for Tier I equipment in subpart C of this part. These proposed requirements help ensure the integrity of the components that make up any non-cab end of a passenger trainset unit. The proposed requirements are substantially similar to the Tier I collision and corner post requirements in §§ 238.211 and 238.213, respectively. The proposal would also specifically permit trainsets with particular safety features, such as pushback couplers, the flexibility to demonstrate required safety performance instead of separate collision post structures.

Proposed paragraph (a) explains that the requirements of paragraphs (b) and (c) of this section apply to a Tier III trainset other than at cab ends.

Proposed paragraph (b) contains the requirements for collision post structures at any non-cab end of a trainset unit. The proposed requirements are the same as the requirements for collision post structures in § 238.211(a)(1), which generally apply to the ends of Tier I passenger equipment other than at the cab end of a locomotive. While the heading of this proposed paragraph is ''Collision post requirements,'' FRA intends for these proposed requirements to apply to the structures otherwise located at approximately the one-third points laterally at any non-cab end of the trainset unit, whether or not the structures are identified as collision posts.

Proposed paragraph (b)(1) explains that at least one set of specified requirements must be met. Paragraph (b)(1)(i) is the first set of requirements addressing collision post structural protection. This paragraph provides that there would be two full-height collision posts, located at approximately the one-third points laterally across the width of the end of the trainset unit. Each collision post would be required to have an ultimate longitudinal shear strength of at least 300,000 pounds, with the load applied at the top of the underframe member to which it is attached. This paragraph further states that if reinforcement is used to provide the required shear strength, the reinforcement shall have full value, meaning a width equal to the width of the collision post, for a distance of 18 inches up from the underframe connection and then taper to a location approximately 30 inches above the underframe connection.

Proposed paragraph (b)(1)(ii) provides an alternative to meeting the requirements of paragraph (b)(1)(i). This paragraph states that an equivalent end structure may be used instead of the specific collision post structures described in paragraph (b)(1)(i). The equivalent end structure would be required to withstand the sum of the forces that would otherwise be applied to each individual post.

Proposed paragraph (b)(2) provides conditions under which collision posts are not required in the non-cab end structure of a Tier III trainset unit. This paragraph explains an exception to the requirements of paragraph (b)(1) for the non-cab end of any unit with push-back couplers and interlocking anti-climbing mechanisms, and for the non-cab ends of a semi-permanently coupled consist. To apply this exception, a non-cab end of a trainset unit must demonstrate that its inter-car connection can prevent disengagement and telescoping to the same extent as equipment satisfying the anti-climbing and collision post requirements of subpart C of this part. The exception in proposed paragraph (b)(2) to the specific collision post requirements for trainset units with certain design features is similar to an exception to the collision post requirements in the existing Tier I requirements in § 238.211(d). Proposed paragraph (b)(2) further specifies that the criteria in proposed § 238.707(b) must be applied to evaluate whether a Tier III trainset unit's inter-car connection can prevent such disengagement and telescoping. Section 238.707 contains the proposed requirements for demonstrating override resistance for connected equipment during a dynamic collision simulation. FRA intends for application of § 238.707(b) to provide clarity and guidance on the type of analysis FRA expects would be used to demonstrate a particular trainset unit fulfills the conditions of the exception when there are no collision posts at the non-cab end.

Proposed paragraph (c) contains the requirements for corner post structures on the non-cab end of a Tier III passenger car. Notably, unlike requirements for collision posts at non-cab ends, requirements for corner posts would not apply to non-cab ends of all units in a Tier III passenger trainset—only Tier III passenger trainset units that are passenger cars. Collision post requirements are necessary for each end of any trainset unit, even if only occupied by crewmembers at one end, to help prevent the uncontrolled crushing or climbing of trainset units that could tend to misalign the trainset or cause telescoping that could endanger the crew and passengers. Corner posts do not protect against the misalignment of trainset units in the same way, and would not be required by this rule if the end of the trainset unit is not designed to be occupied by crewmembers or passengers. Specifically, for a passenger car that has a cab equipped with one or more control stands or consoles designed for an engineer to operate the trainset, the requirements of § 238.711 would apply to the cab end. Otherwise, the requirements of this paragraph would apply to the non-cab end of a passenger car, including any end of a passenger car without a cab.

Although the proposed heading of this paragraph is ''Corner post requirements,'' FRA makes clear these proposed requirements apply to the corner structures at the non-cab ends of passenger cars, whether or not the structures are identified as corner posts. The majority of the corner structure requirements provided in this section are analogous to the Tier I corner post requirements in § 238.213.

The proposed requirements in paragraph (c)(1) apply to each non-cab end of a passenger car and would require that there be two side structures, placed forward of the occupied volume, capable of resisting the forces specified in paragraphs (c)(1)(i) through (iii). These structures do not necessarily need to be located on the absolute corners of the carbody if they are located in a manner that protects the occupied volume. FRA is not aware of any international standards or requirements for corner posts that are equivalent to the proposed requirements. The proposed requirements are intended to address accident conditions like those of the commuter train derailment and collision in Bridgeport, CT, on May 17, 2013. In that accident, a commuter train derailed toward an adjacent track such that the non-cab end of a passenger car protruded into the right-of-way of an oncoming train. There was structural damage to the protruding corner, but the corner post resisted loss of the occupied volume to avoid fatal injuries.

Proposed paragraph (c)(1)(i) provides the first load case and pass/fail requirement to be applied to the corner structures at non-cab ends. This paragraph states that each corner structure must resist a 150,000-pound horizontal force at the height of the floor without failure. Proposed paragraph (c)(1)(ii) provides the second load case and pass/fail requirement. This paragraph states that each corner structure must resist a 20,000-pound horizontal force at the height of the roof without failure. Proposed paragraph (c)(1)(iii) provides the third load case and pass/fail requirement. This paragraph states that each corner structure must resist a 30,000-pound

horizontal force applied at a point 18 inches above the top of the floor without permanent deformation.

Proposed paragraph (c)(2) states that the orientation of the applied horizontal forces shall range from longitudinal inward to transverse inward, consistent with the Tier I requirements in § 238.213.

Proposed paragraphs (c)(3) and (4) do not have explicit counterparts in the Tier I requirements in § 238.213. FRA intends for each paragraph to address the way to apply the evaluation loads to the structure at non-cab ends. Paragraph (c)(3) states that for each evaluation load, the load shall be applied to an area of the structure sufficient enough to prevent local crippling or punching through the material at the point of load application. Paragraph (c)(4) states that the load area shall be chosen to be appropriate for the particular car design and shall not exceed 10 inches by 10 inches. These two paragraphs, addressing the areas of the corner structure over which the load must be applied, are intended to guide the planning of the tests and analyses undertaken to demonstrate compliance with the corner structure requirements. FRA recognizes that a highly localized load application can result in localized deformation and, as a consequence, result in an evaluation test or analysis that is not descriptive of the entire corner structure's behavior. At the same time, too large a load application area would not result in a proper evaluation of the corner structure at the discrete locations integral to demonstrating the strength of the structure. While FRA provides this guidance, the entities (*e.g.,* manufacturers, testing facilities, consultants) performing the evaluation would use their engineering judgment to determine the selection of the loading mechanism (*i.e.,* physical load application device in the case of a test, or boundary conditions in the case of a computer simulation) and load application area for evaluation purposes consistent with the proposed requirements.

In addition, FRA notes that because two of the three load cases described in paragraph (c)(1) permit permanent deformation to occur during the evaluation (provided the ultimate strength of the post is not reached), FRA envisions that FEA or another appropriate simulation tool would be used to perform the evaluation. FRA also expects any analysis model used to demonstrate compliance with this paragraph and the other structural requirements in this part, would be properly validated using test data to demonstrate the model's ability to properly reflect the relevant behaviors.

Section 238.715 Roof and Side Structure Integrity

FRA is proposing that the roof and side structure integrity requirements for Tier III trainsets (and Tier I trainsets designed to alternative crashworthiness standards under proposed appendix G to this part) equal those requirements in § 238.215, ''Rollover strength,'' and § 238.217, ''Side structure.''

Section 238.215 currently requires a carbody to be designed so that the weight of the car can be supported by either the roof of the car, or by specified sidewall structural members, without resulting in stresses exceeding one-half of the stress necessary to cause either yielding or buckling. FRA expects that compliance with this requirement would be demonstrated through FEA modeling of the structural carbody. Moreover, FRA expects that the FEA model would have been subjected to a program of model validation to demonstrate the model's ability to accurately represent the structure. Further discussion of § 238.215 is in the original Passenger Equipment Safety Standards final rule. See 64 FR 25607, 25608.

Section 238.217 currently includes design requirements for the sidewall stiffness of Tier I passenger equipment. This section codifies longstanding design practice in the U.S. Compliance with this section may be demonstrated through hand calculations. FRA does not expect compliance to require physical testing or computer simulation, although these methods of evaluation may be used. Further discussion of § 238.217 is in the original Passenger Equipment Safety Standards final rule. 64 FR 25608, 25609.

Section 238.717 Truck-to-Carbody Attachment

In this section, FRA proposes requirements to demonstrate the integrity of truck-to-carbody attachments on a Tier III trainset (or a Tier I trainset designed to alternative crashworthiness standards under proposed appendix G to this part) during a dynamic impact. The requirements in either paragraph (a) or (b) may be applied; a given design must demonstrate it complies with only one set of requirements. FRA provided the two sets of requirements to permit different types of analyses to be used to demonstrate the trainset units possess adequate truck attachment strength. If a trainset features more than one type of truck or more than one type of truck-to-carbody attachment, satisfactory truck-to-carbody attachment strength must be demonstrated for each design.

Paragraph (a) proposes demonstrating truck-to-carbody attachment integrity by showing compliance with the requirements in § 238.219. Discussion of § 238.219 is in the original Passenger Equipment Safety Standards final rule, 64 FR 25609, 25610, May 12, 1999, and in amendments to the final rule, 67 FR 19977, 19978, Apr. 23, 2002.

Proposed paragraph (b) contains the second option for demonstrating truck-to-carbody attachment integrity. In this paragraph, the truck-to-carbody attachment evaluation loads would be applied at the CG of the truck and each load case would be evaluated separately. Additionally, the loads would be applied quasi-statically for each load case. For each of the quasi-static load cases, the applied load may not cause any permanent deformation in the truck attachments or carbody.

Proposed paragraph (b)(1) describes the first of three quasi-static loads that must be evaluated. The load is stated as a 3g vertical load acting downward on the mass of the truck (*i.e.,* pulling the truck toward the ground). Because a 3g vertical load acting upward on the mass of the truck would force the truck into contact with the underside of the carbody, only the 3g downward vertical load case must be evaluated to demonstrate sufficient attachment strength between the truck and carbody.

Proposed paragraph (b)(2) describes the second of the three quasi-static loads to be evaluated. The load is stated as a 1g lateral load acting on the mass of the truck. Because the lateral load must be evaluated at the CG of the truck, this load would generate a moment (or torque) in the truck-to-carbody attachments. Additionally, the vertical reaction that develops as a result of the lateral load must also be considered and evaluated simultaneously with the lateral load itself. FRA expects that if the truck-to-carbody attachments are not symmetric from side to side, the lateral load case would be evaluated for a lateral load acting independently in both the positive lateral and negative lateral (*e.g.,* inward and outward) directions.

Proposed paragraph (b)(3) describes the final three quasi-static loads to be evaluated. The load is stated as a 5g longitudinal load acting on the mass of the truck. Because the longitudinal load must be evaluated at the CG of the truck, this load would also generate a moment (or torque) in the truck-to-carbody attachments. The vertical reaction that develops as a result of the longitudinal load must also be considered and

evaluated simultaneously with the longitudinal load.

Demonstrating the truck can remain attached under a 5g quasi-static longitudinal load is contingent on complying with the proposed requirements in paragraphs (b)(3)(i) and (ii), derived from the dynamic collision scenario results described in § 238.705(a) in which a moving train impacts a standing train under specified conditions. During the collision scenario § 238.705(a) describes, the average longitudinal deceleration at the CG of the vehicle containing the truck under evaluation (and its attachments) may not exceed 5g (paragraph (b)(3)(i)), and the peak longitudinal deceleration of the truck may not exceed 10g (paragraph (b)(3)(ii)). The longitudinal deceleration of the truck must be measured during the collision scenario at the CG of the truck.

Because the initially-moving and initially-standing train consists are aligned with one another in the collision scenario described in proposed § 238.705(a), a half-symmetric model may be used, as appropriate, to demonstrate compliance with proposed paragraph (b)(3) of this section. To use a half-symmetric model properly to demonstrate truck attachment integrity, the truck and its attachments must also be symmetric from side to side (*e.g.,* using the same attachment mechanism(s) in the same position(s) relative to a vertical-longitudinal plane at the center of the vehicle).

Proposed paragraph (c) provides an alternative to demonstrating compliance with paragraph (b)(3). Paragraph (c) would require demonstrating the truck remains attached after a dynamic impact under the nominal conditions in the dynamic collision scenario described in § 238.705(a). Because the requirements of paragraph (b)(3) may only be applied to a truck and carbody meeting the deceleration requirements in paragraphs (b)(3)(i) and (ii), respectively, paragraph (c) may be used to demonstrate truck-to-carbody attachment when the requirements in paragraph (b)(3) are exceeded.

Proposed paragraph (d) states that for the purposes of this section, the mass of the truck includes the axles, wheels, bearings, truck-mounted brake system, suspension system components, and any other component attached to the truck by design. This description of what the mass of the truck includes is the same as that in § 238.219. FRA expects the mass of the truck, including the components attached, would be documented.

Finally, proposed paragraph (e) emphasizes that truck-to-carbody attachment integrity must be demonstrated using a validated model. If the model employed has not been validated by means like those required to comply with § 238.705, then additional testing must be performed to validate the model being used to demonstrate performance with this requirement.

Glazing

Section 238.721 Glazing

This section would define the requirements for exterior glazing (*i.e.,* side- and end-facing exterior windows and windshields) to be installed on Tier III trainsets. The requirements of this section outline performance standards for both the cab and non-cab areas of the trainsets. The performance metrics for the non-cab areas adopt the requirements of part 223 of this chapter to maintain compatibility with existing Tier I trainsets. FRA developed the requirements for the cab areas from the recommendations the Tier III Cab Glazing Task Group provided.

The approach FRA used to develop glazing requirements for cab areas, much like its approach to Tier III in general, represents a balance between maintaining compatibility with existing Tier I equipment and the adoption of service-proven techniques to protect against potential risks encountered with high-speed operation. In this respect, it is important to note that, while glazing exposed to the direction of train motion would be more vulnerable due to the speed of the trainset, the right-of-way must also be secured and protected appropriately against potential hazards to the glazing in areas where Tier III trainsets will operate above Tier I speeds. Such hazards include the launching of objects at the train. For example, substantial fencing in conjunction with intrusion detection systems are common protections provided for high-speed systems where an overpass spans the right-of-way (ROW). These additional infrastructure improvements represent a significant increase in ROW protection, which are not typically present on most U.S. rail corridors, but would be expected for Tier III high-speed corridors. Indeed, under FRA's Track Safety Standards, a ''right-of-way plan'' for Class 8 and 9 track, which corresponds to the speed range for Tier III high-speed corridors, must be submitted to FRA for approval and address the prevention of vandalism, launching of objects from overhead bridges or structures into the path of trains, and intrusion of vehicles from adjacent ROWs. See 49 CFR 213.361.

Risks posed to exterior glazing may differ greatly depending on the location and orientation of the installed glazing. For this reason, cab glazing is further segregated into two distinct categories: One for end-facing locations (*e.g.,* windshields), and one for cab side windows and glazing (if equipped). Since the two locations may present different risks, the definition of ''end-facing'' is important to establish how cab glazing compliance is evaluated. This subject was discussed on a number of occasions during the task group meetings as both the part 223 definitions and international standards were considered. However, the task group concluded the language in part 223 was generally sufficient, although FRA proposes revisions to this section and the definitions for ''glazing, end-facing'' and ''glazing, side-facing'' in § 238.5. FRA agrees with the task group and intends for the proposed revisions to the glazing definitions to clarify that the end-facing glazing requirements do not apply to certain locations in a semi-permanently connected train consist that, while on the end of a vehicle, are exposed to lesser risk.

Proposed paragraph (b) describes the requirements for end-facing cab glazing and represents the most substantial change from the traditional FRA Type I performance requirements in part 223. End-facing cab glazing on Tier III trainsets would be designated as Type IHS. Since the challenge to glazing in this location is directly related to the speed of the trainset, considerable discussion was devoted to this topic within the task group. Although different approaches were discussed, the efforts of the group eventually focused on finding a reliable and repeatable large object impact test procedure, and appropriate performance metrics, to replace the traditional ''cinder block test.''

Since the windshield of any vehicle must meet several performance criteria to provide adequate protection, durability, and visual clarity, quality assurance and control are imperative. In this respect, the task group widely accepted that the current Type I large object impact test presents too many variables and challenges to reliably and accurately assess the performance of glazing used at very high-speeds. To resolve this issue, the group considered existing international standards and test procedures. In particular, the group focused on the development of criteria, test conditions, procedures, and projectile design based on relevant portions of EN 15152 and UIC 651.

After considerable discussion, the task group reached consensus to adopt

modified criteria based on the relevant elements of EN 15152 and UIC 651 for the Tier III end-facing large object impact test. This is outlined in proposed paragraph (b)(2), which would establish the projectile design, test conditions (*e.g.,* speed, impact angle, sample size, temperature, etc.), the number of representative samples to be tested, and qualification criteria. Additional considerations for the use of representative sample sizes, instead of actual dimensions, are proposed in paragraph (b)(3), and proposed paragraph (b)(4) addresses demonstration of resistance to spalling. Specifically, under the conditions proposed, each sample must show no penetration, no marks on the witness plate, and no failure of the mounting apparatus, which would be representative of the method by which the glazing would be installed. Further, under proposed paragraph (b)(4), materials used specifically to protect the cab occupants from spall (*i.e.,* spall shields) would not be required to meet the flammability and smoke emission performance requirements of appendix B to this part. The task group raised concerns about the availability of spall shields that meet the performance requirements of appendix B to this part, while balancing the protection from spalling to cab occupants that spall shields offer. FRA makes clear, however, that spall shields, like other materials in a cab, would continue to be subject to other requirements for fire safety, *i.e.,* the requirements of § 238.103(c) through (e), which include fire safety analysis requirements.

In addition, proposed paragraph (b) also identifies supplemental considerations for the effects of temperature and curvature, each adopted from EN 15152. These considerations are not expressly detailed in part 223, yet they were widely accepted as necessary to ascertain reliable and accurate glazing performance evaluations. The effects of curvature could not be ignored because most high-speed trainsets now incorporate sophisticated front-end glazing designs to balance visibility with aerodynamics. FRA notes that, although the task group considered a small object impact test, it decided such a requirement was not necessary at this time. The task group considered its value for high-speed trainsets related more to the durability and maintenance of the glazing, whereas the large object impact and ballistic test requirements would provide the more critical performance metrics related to safety. FRA agrees with the approach taken by the task group.

FRA notes that the cab side glazing, addressed in proposed paragraph (c), presents a different set of challenges and its role in protecting cab occupants is highly dependent on window size and location, which can vary greatly between trainset designs. While initial task group discussions considered adopting traditional Type I requirements for the side glazing, it determined it was not necessary and potentially impractical. Imposing the same requirements established for end-facing glazing would require a substantial increase in size and weight (and the inherent framing and mounting considerations) and may limit the level of available protection by potentially restricting the use of innovative, lightweight transparent materials, which may be well suited for this side-facing location.

Since side-facing cab glazing is not directly exposed to hazards in the direction of travel, the speed-dependent requirements of the proposed Type IHS test requirements may be inappropriate. The glazing task group agreed that the two most important performance metrics for safety in this location are ballistic resistance and mounting strength. Therefore, the group recommended maintaining the same level of ballistic protection as currently provided in part 223 for end-facing glazing as the primary performance metric for side-facing cab glazing. The task group also agreed to continue the current side-facing large object impact test in part 223 to ensure the glazing mounting arrangement would be structurally sufficient. FRA agrees with this approach.

Ballistic protection for cab glazing was discussed in detail during task group meetings. In particular, labor representatives asserted that ballistic protection from a larger diameter projectile, differing from the size required for Type I glazing by part 223, would enhance the overall safety of the cab occupants. Much discussion was focused on this point, but a review of the available information on the impact characteristics of reasonable ballistic scenarios (projectile size and terminal velocity), and a review of the statistics related to glazing failure due to ballistic impact, proved inconclusive. This is one area where the task group could not agree on a consistent approach. Therefore, the task group referred the decision on ballistic requirements for cab glazing to FRA during the development of the task group's final recommendations.

FRA does not have sufficient evidence to suggest a particular risk or hazard exists that would apply to all potential Tier III systems to warrant a change from current ballistic requirements in part 223. However, this does not imply that the conditions of a particular operation may not warrant additional consideration and protection. To be consistent with the aforementioned approach to Tier III safety, elements which may be subject to variables present within a specific operation must be addressed in a manner appropriate to that operation. Since the level of service, operating environment, and operational conditions may vary greatly between Tier III railroads, a single prescriptive requirement that varies from current requirements cannot be justified.

Proposed paragraph (b)(5) describes the approach taken for Tier III ballistic protection. Specifically, Tier III operations must identify risks and hazards specific to their property as part of their Tier III Safe Operation Plan, and provide ballistic penetration resistance sufficient to protect cab occupants from these risks and hazards. This protection shall, at a minimum, meet the requirements of part 223, appendix A.

Proposed paragraph (b)(6) describes options for testing of glazing for Tier III trainsets. Compliance with the requirements may be demonstrated by independent third-party testing or by the glazing manufacturer itself. If the glazing manufacturer is chosen to certify the glazing, the manufacturer must invite FRA to witness the test(s) and provide 30 days' notice to FRA before conducting the test(s).

Paragraph (b)(7) proposes re-certification requirements that would apply when changes to the glazing manufacturing process or mounting arrangement occur which may influence the mechanical properties of the glazing system, and the ability of the glazing to comply with the penetration resistance requirements of this section. This proposed requirement is necessary to ensure that the integrity of the glazing is not compromised by changes occurring after the original certification.

Paragraph (b)(8) proposes that documentation describing any glazing certification or re-certification be made available to FRA upon request.

Proposed paragraph (b)(9) describes the marking requirements for Tier III end-facing cab glazing material. Markings must be clearly visible after the glazing is installed and contain the words ''FRA TYPE IHS'' (indicating that the glazing is compliant with the requirements in this paragraph (b)), the

name of the manufacturer, and the type of brand identification of the material.

As noted above, proposed paragraph (c) contains the requirements for side-facing exterior cab glazing. Such glazing must comply with the existing large-object impact requirements for Type II glazing described in appendix A to part 223 of this chapter. FRA also proposes that side-facing cab glazing must achieve the same ballistics penetration resistance required of end-facing glazing in paragraph (b)(5) above. For all other areas of the trainset, the non-cab side-facing glazing requirements of paragraph (d) apply. FRA invites comment on the manner and extent to which glazing subject to the requirements of paragraphs (c) or (d) should be specifically marked and identified for Tier III service similar to that proposed for end-facing cab-glazing in paragraph (b)(9). FRA may impose specific marking and identification requirements in the final rule.

The performance aspects of non-cab side-facing glazing were established by consensus agreement of the ETF before creation of the Tier III Cab Glazing Task Group. Overall, the requirements for non-cab glazing maintain the current requirements for Type II glazing in appendix A of part 223 as indicated in paragraph (d)(1). As mentioned earlier, FRA intends for this approach to maintain compatibility with current Tier I requirements to establish commonality for operation with all other equipment types at speeds not exceeding 125 mph, whereas additional systemic safety measures and ROW protections would be required for higher-speed operations.

In regards to emergency egress and rescue access, the ETF recognized that multiple approaches would need to be considered to support the adoption of service-proven technology. More specifically, the methods employed in the manufacturing of high-speed trainsets are often governed by considerations of aerodynamic effects and noise reduction. In some designs, this can have particular influence on the way side-facing glazing is installed and mounted on trainsets. Therefore, the ETF recommended a more performance-oriented requirement rather than a prescriptive one, which is reflected here and in the proposed requirements for emergency window egress and rescue access in proposed § 238.741 discussed below. Proposed paragraph (d)(2) would specifically recognize the design of windows intended to be breakable as an alternative for removing glazing. This would include using a tool or other method to expeditiously and safely remove the glazing if at least the same level of glazing safety is maintained as the current requirements of part 223. This must be demonstrated by quantitative analysis, full scale demonstration, or other means and be addressed as part of the railroad's Tier III Safe Operation Plan. As noted, requirements for emergency window egress and rescue access would also need to be met, consistent with proposed § 238.741.

Proposed paragraph (e) contains requirements for glazing securement. Paragraph (e)(1) would require designing each exterior window glazing system (the window glazing and its mounting apparatus) to withstand the forces caused by variances in pressure when two trains pass at their maximum authorized speed at their closest distance to each other. This requirement is identical to that currently provided for Tier I and Tier II passenger equipment in §§ 238.221(b)(2) and 238.421(d)(1), respectively, and would help provide assurance that a trainset's exterior window glazing remains in place when passing other objects in close proximity. Proposed paragraph (e)(2) would also require that exterior window glazing be secured so as to withstand the impact forces described in this section. This proposed requirement is virtually identical to that currently provided for Tier I and Tier II passenger equipment in §§ 238.221(b)(1) and 238.421(d)(2), respectively. The requirements proposed in paragraph (e) are common for all exterior glazing installed on a Tier III trainset, and may be demonstrated through testing or analysis.

Brake System

Section 238.731 Brake System

In this section, FRA is proposing to introduce requirements for brake systems for Tier III passenger trainsets. Development of these requirements was identified as one of the goals for this first Tier III rulemaking to facilitate planned equipment acquisitions. These requirements represent a balance between maintaining compatibility with existing Tier I equipment and the adoption of service-proven techniques to protect against potential risks encountered with high-speed operations. A concerted effort was made to develop technology-neutral requirements.

To develop the proposal for these brake system requirements, the ETF created the BTG. The BTG's charter, established at the group's initial meeting, was to develop performance-based regulations which would accommodate existing high-speed trainset technology without regard to its design. To achieve this goal, many of the provisions in this proposed section refer to provisions in the railroad's Tier III Safe Operation Plan or ITM plan. This is necessary to address the various ways brake system technology is actually implemented in high-speed passenger trainsets worldwide.

Proposed paragraph (a) describes the requirement for each railroad to identify (through analysis and testing) the maximum safe operating speed for its Tier III trainsets that results in no thermal damage to equipment or infrastructure during normal operations. This is based on the requirements for Tier I and Tier II passenger equipment in §§ 238.231(j)(4) and 238.431(e)(4), respectively, that a train not operate at a speed resulting in thermal damage to wheels or rotor surface temperatures exceeding the manufacturer's recommendation when the friction brake alone is applied to brake the train. Nonetheless, this proposed section acknowledges that, at present, high-speed trainset braking technology relies predominantly on electric (*i.e.,* dynamic or regenerative) braking and that friction braking, by whatever means, is used only at lower speeds. In addition, this proposed section presumes there are extensive on-board diagnostics capable of identifying dynamic brake defects (as specified in § 238.731(n)) present. Moreover, this proposed section extends the scope of existing regulations by considering the potential for a Tier III braking technology that relies on interaction or contact with the rail or guideway.

Proposed paragraph (b) would require the railroad's Tier III Safe Operation Plan to identify the worst-case adhesion conditions under which the brake system must stop the passenger trainset from its maximum operating speed within the prevailing signal spacing. This proposed requirement is derived from its Tier II equivalent at § 238.431(a), which states that a passenger train's brake system shall be capable of stopping the train from its maximum operating speed within the signal spacing existing on the track over which the train is operating under worst-case adhesion conditions. The distinction for Tier III is that the ''worst case'' conditions would be defined by a railroad in its Tier III Safe Operation Plan. This would help ensure that a railroad relies on a formally-devised definition of worst-case adhesion in its procurement of individual equipment. In recognizing that these elements may vary between operations and geographical locations, allowing a railroad to define these conditions

would provide it the flexibility to tailor its braking system to the actual operating environment.

Proposed paragraph (c) would require Tier III trainsets to be equipped with an emergency brake application feature that is available at any time and produces an irretrievable stop. This proposed paragraph is consistent with the requirements of § 232.103(i) of this chapter for brake systems generally and the requirements of § 238.231(c) and § 238.431(c) for Tier I and II passenger equipment brake systems, respectively. The emergency brake application would also be initiated by an unintentional parting of the train, or by the train crew at locations specified in the railroad's Tier III Safe Operation Plan. Because the locations where a trainset can be safely stopped are operation-specific, the railroad would identify them in its Tier III Safe Operation Plan.

Proposed paragraph (d) would establish requirements for a passenger brake alarm. The BTG invested considerable effort addressing this concept. Generally, the passenger brake alarm enables passengers to alert the engineer of a need to stop the train. However, stopping the train at a random location due to a passenger-initiated brake command can be a highly undesirable event and the BTG believed the engineer should determine the safest location where the train should stop under emergency conditions. Thus, the BTG recommended a set of conditions when the passenger brake alarm is acknowledged and acted upon, which FRA agrees it should adopt for Tier III passenger equipment. Generally, these provisions have been developed in consideration of operating practices associated with present-day high-speed operations in Asia and Europe and relevant requirements currently in part 238.

Proposed paragraph (d)(1) would specify that each trainset unit have two locations equipped with the means to initiate a passenger brake alarm unless a unit is 45 feet or less in length. In that case, one equipped location would be sufficient.

This proposal also derives from the requirements for Tier II passenger equipment in § 238.431(c). Passenger brake alarm locations would be identified in the railroad's Tier III Safe Operation Plan. This paragraph would also require that the words ''Passenger Brake Alarm'' be legibly stenciled or marked on each device or on an adjacent badge plate, as required for Tier I passenger equipment in § 238.305(c)(5) (as ''Emergency Brake Valve'') and indirectly required for Tier II passenger equipment under subpart F of part 238.

Proposed paragraph (d)(2) would require the passenger brake alarm to be designed to minimize the opportunity for accidental activation. The brake alarm may be protected from accidental activation by a cover or screen provided the alarm remains readily accessible to passengers.

Proposed paragraph (d)(3) would require that activation of the passenger brake alarm result in an emergency brake application if the trainset has not cleared the boarding platform. This proposal recognizes in particular that the alarm may be activated due to an urgent safety issue associated with passengers or crewmembers boarding or alighting from the trainset while at the platform, and that the trainset would be traveling at a slower speed as it begins to accelerate away from the platform.

Proposed paragraph (d)(4) would specify the sequence of events when the passenger brake alarm is activated after the trainset has cleared the boarding platform. In this event, the engineer must acknowledge the alarm within a prescribed time period to retain control of the trainset. The railroad's Tier III Safe Operation Plan must specify the time period the engineer has to act, and the Plan must also describe the method used to confirm that the trainset has cleared the boarding platform.

Proposed paragraph (d)(5) would describe the brake system operation when the engineer does not acknowledge a passenger brake alarm with the specified time period. In this event, a full service brake application shall occur automatically unless the engineer intervenes by acknowledging the brake alarm and actively manipulating appropriate trainset controls, as described in proposed paragraph (d)(6), to give the engineer ultimate control over whether to stop the trainset.

Proposed paragraph (e) addresses degraded brake system performance of Tier III trainsets with blended braking systems and is based on requirements for Tier I and Tier II passenger equipment in §§ 238.231(j) and 238.431(e), respectively. A blended brake system consists of a combination of friction and dynamic braking. Proposed paragraph (e)(1) specifies that the allowable stopping distance defined in the railroad's Tier III Safe Operation Plan shall not be exceeded in the event of a power loss or failure of the dynamic or regenerative brake. The Tier III Safe Operation Plan must contain provisions for reducing the maximum allowable train speed, based on feedback from the on-board monitoring and diagnostic system, specified in proposed § 238.731(n), so the train can be safely stopped using friction braking alone within the allowable stopping distance.

Proposed paragraph (e)(2) would require the railroad's Tier III Safe Operation Plan to define the operating conditions when the available friction braking effort alone can safely stop the Tier III trainset. As a whole, proposed paragraph (e) would require that restrictions be in place (as defined in the Tier III Safe Operation Plan) that prescribe how trainsets without functional electric braking are to be operated to ensure thermal-related damage does not occur, particularly to brake equipment.

Proposed paragraph (e)(3) would require each Tier III trainset to be equipped with diagnostic hardware and software that provides a continuous indication of the brake system status to the engineer in the controlling cab. See also the proposed requirement in § 238.731(n) for an onboard monitoring and diagnostic system.

Proposed paragraph (e)(4) would require the railroad to determine, through analysis and testing, the maximum speed its Tier III trainsets can operate at using the friction brake system alone without causing thermal-related damage to the equipment or infrastructure. This provision is related to proposed paragraphs (e)(1) through (3) of this section because the parameters associated with continued trainset operation under conditions of degraded brake system performance must be developed for the particular trainset technology and operating characteristics, and accommodated in trainset operating procedures, including any software and hardware associated with trainset speed control.

Proposed paragraph (f) addresses main reservoirs for Tier III trainset brake systems and is generally based on safety requirements originally developed for steam locomotives, as found in § 230.72(b) of this chapter. Paragraph (f)(1) would require that main reservoirs be designed and tested using a recognized industry standard specified in the railroad's Tier III Safe Operation Plan, such as the American Society of Mechanical Engineers (ASME) Boiler and Pressure Vessel Code for Unfired Pressure Vessel Section VIII, Division I (ASME Code), referenced in § 229.51(a)(2). The actual standard used to qualify main reservoirs for Tier III trainsets must be documented in the railroad's Tier III Safe Operation Plan. This paragraph would specify the working pressure and rated temperature for main reservoirs unless otherwise defined by the designated standard

identified in the railroad's Tier III Safe Operation Plan. Reservoirs would be certified consistent with requirements based on size and volume.

Proposed paragraphs (f)(2) and (3) of this section contain requirements for welded steel main reservoirs that are also based on requirements originally developed for steam locomotives in § 230.72(b) through (d) of this chapter. Proposed paragraph (f)(3) would prohibit welded repairs of Tier III trainset main reservoirs.

Proposed paragraph (g)(1) addresses requirements specifically for aluminum main reservoirs and refers to the existing requirements in § 229.51(a) of this chapter applicable to locomotives.

Proposed paragraph (g)(2) is a new provision and contains a prohibition on welded repairs to aluminum main reservoirs.

Proposed paragraph (h) prescribes requirements for steel and aluminum main reservoir proof tests, which would be performed prior to their installation on a Tier III trainset. These tests may be pneumatic or hydrostatic. The test pressure would be defined in paragraphs (f) or (g) of this section, depending on whether the reservoir is steel or aluminum, unless otherwise established by the railroad's ITM Plan. Records of main reservoir tests must be made and retained for the life of the equipment. In addition, the railroad's ITM Plan shall define periodic inspection requirements for main reservoirs on Tier III trainsets.

Proposed paragraph (i) addresses the requirements for the locations of gauges and devices used by the engineer to aid in the control or braking of a Tier III trainset. Such devices must be placed so that the engineer can conveniently read them from the engineer's normal position during trainset operation. This paragraph is based on the existing requirement in § 229.53 of this chapter.

Proposed paragraph (j) contains requirements for Tier III trainset brake application and release. Paragraph (j)(1) proposes that brake pad and shoe clearance must be present when the brakes are released. Paragraph (j)(2) would require establishing the minimum brake cylinder pressure necessary to adjust from minimum service to full service brake application for proper train operation. This pressure would be approved during the trainset design review and documented in the railroad's Tier III Safe Operation Plan.

Proposed paragraph (k) would require that the railroad specify the ITM requirements for the foundation brake gear in the railroad's ITM plan. The purpose for these requirements derives from § 229.57 of this chapter. However, due to the variety of possible Tier III braking systems, the prescriptive requirements of § 229.57 may not be appropriate for a given foundation brake system. Defining the requirements in the railroad's ITM plan, which is subject to FRA review and approval, would ensure that appropriate ITM practices are in the foundation brake system on Tier III trainsets.

Proposed paragraph (l) would define limits on brake pipe leakage and also require that the method for inspecting brake pipe leakage be prescribed in the railroad's ITM plan. Leakage rates would be established under either paragraph (l)(1) or paragraph (l)(2) of this section, whichever is more restrictive. Specifically, paragraph (l)(1) would permit leakage limits based on an Air Consumption Analysis in the railroad's Tier III Safe Operation Plan. Paragraph (l)(2) would set prescriptive requirements for brake pipe leakage adopted from § 229.59(b) and (c) of this chapter.

Proposed paragraph (m) describes the requirements for wheel slide protection and alarm. Extensive discussion on this topic occurred during BTG deliberations. For safety reasons, wheel slide must be avoided to prevent overrunning a switch or incursion of the trainset into an area beyond the confines of its operating authority. Nonetheless, the BTG considered wheel slip to be a maintenance concern and did not recommend that FRA address it in this proposed rulemaking. Wheel slip differs from wheel slide because it is caused when the tractive effort on the wheel exceeds the adhesive forces keeping the wheel in normal rotational contact with the rail, whereas wheel slide is caused when the braking effort on the rail exceeds the adhesive forces keeping the wheel in normal rotational contact with the rail. FRA agrees with the task group and has modeled this paragraph after the wheel slide protection and alarm requirements for Tier II passenger equipment in § 238.431(h).

Proposed paragraphs (m)(1) through (3) of this section define the minimum functional requirements for wheel slide protection and alarm. Paragraph (m)(1) would require that an adhesion control system be available to adjust the braking force on each wheel to avoid wheel slide. Paragraph (m)(2) would require that this system be able to alert the engineer, either through visible or audible means, or both, of the presence of a wheel slide condition on any axle in the trainset. Proposed paragraph (m)(3) would address when the wheel slide protection system fails to function within pre-established, allowable parameters as defined in the railroad's Tier III Safe Operation Plan. To prepare for such an event, the Tier III Safe Operation Plan shall specify operating restrictions (*e.g.,* speed limits) on trainsets whose slide protection devices are not functioning as intended.

Proposed paragraph (n) would require each Tier III trainset to be equipped with a brake system health monitoring and diagnostic system to automatically assesses the functionality of the brake system for the entire trainset, both before departure of the trainset and while it is en route. The railroad's Tier III Safe Operation Plan shall document the details of the monitoring and diagnostic system and the means for communicating trainset brake system functionality.

Proposed paragraph (o) would require Tier III equipment to be equipped with a way to secure equipment, when unattended, from unintentional movement. This means of securement must be independent of the pneumatic brake. Since the securement technique may be technology-specific to the trainset, FRA expects the Tier III Safe Operation Plan would identify the procedures and means necessary for securing unattended equipment and the grade conditions when such securement must occur. The Tier III Safe Operation Plan shall also provide evidence demonstrating the effectiveness of the securement method(s). As defined in § 238.231(h)(4), ''unattended equipment'' means equipment left standing and unmanned in such a manner that a qualified person cannot readily control the brake system of the equipment. FRA notes in particular that, because certain brake system requirements are imposed by Federal statute, 49 U.S.C. ch. 203, the railroad must also ensure those statutory requirements are addressed.

Proposed paragraph (p) would require the design of a Tier III trainset to accommodate coupling to a rescue vehicle (which could be a conventional locomotive) or a rescue trainset. The design must also allow the rescue vehicle or trainset to control the brake system on the disabled Tier III trainset. This proposed paragraph is based on a similar requirement for Tier II passenger equipment in § 238.431(f).

Interior Fittings and Surfaces

Section 238.733 Interior Fixture Attachment

This proposed section would address requirements for interior fixture attachment strength for Tier III trainsets, principally to help prevent and mitigate hazards associated with secondary collisions (*i.e.,* a collision occurring

inside the trainset as a consequence of a (primary) collision involving external contact with the trainset). It would provide two means of demonstrating compliance.

Proposed paragraph (a)(1) would provide the first means: Interior fixtures must comply with the existing requirements in 49 CFR 238.233, Interior fittings and surfaces, and APTA PR–CS–S–006–98, Rev. 1 (previously designated as SS–C&S–006), ''Standard for Attachment Strength of Interior Fittings for Passenger Railroad Equipment,'' Authorized September 2005. FRA proposes to incorporate by reference this APTA standard into this paragraph and in paragraph (i) of appendix G to this part. APTA PR–CS–S–006–98 addresses fittings used in commuter and intercity railcar and locomotive cab interiors. It specifies the minimum strength and attachment strength for interior sub-systems, including overhead luggage racks, stanchions and handholds, windscreen and partitions, food service equipment, and miscellaneous interior fittings. This standard also contains recommendations for design requirements and design practices for such interior sub-systems. APTA PR–CS–S–006–98 is reasonably available to all interested parties online at *www.apta.com*. Additionally, FRA will maintain a copy available for review.

These proposed requirements are based on the applied accelerations of 8g longitudinally, 4g laterally, and 4g vertically, acting on the mass of the fitting (8g/4g/4g). As described in the Technical Background and Overview section of this NPRM, the 1999 Passenger Equipment Safety Standards final rule (64 FR 25540) established these acceleration-based performance requirements after years of industry practice designing interior fittings to withstand the forces due to accelerations of 6g longitudinally, 3g laterally, and 3g vertically (6g/3g/3g), which FRA found to be inadequate to protect against occupant injury. Subsequent accident investigations have revealed that interior fixtures that comply with these requirements, codified for Tier I passenger equipment in § 238.233, perform significantly better than interior fixtures in passenger cars that were exempted from those requirements and thus do not meet the regulations, *i.e.,* generally passenger cars already in service when the 1999 final rule took effect.

However, FRA recognizes some Tier III passenger equipment may not experience accelerations of 8g/4g/4g during the dynamic collision scenario proposed in § 238.705, or at higher-speed collisions resulting in collapse of the occupied volume. Members of the rail industry contend the 8g/4g/4g requirements are unnecessary for some equipment designed to alternative standards and would add to vehicle weight. FRA acknowledges that equipment that does not experience large decelerations during collisions may not need to be designed to these FRA requirements, which are also reflected in industry safety standards. Accordingly, FRA developed an alternative attachment strength option consistent with international design standards.

Proposed paragraph (a)(2) describes the alternative option for demonstrating adequate attachment strength of interior fixtures in Tier III trainsets. The proposed option requires that interior fixture attachment strength comply with the requirements in Section 6.1.4, ''Security of furniture, equipment and features,'' of GM/RT2100, which FRA proposes to incorporate by reference in this paragraph and § 238.741(b)(2), below. Section 6.1.4 contains requirements for securement of furniture, on-board equipment, and other trainset features to help mitigate against injuries to passengers and crew from secondary impacts within the occupied volume. GM/RT2100 is available to all interested parties online at *www.rgsonline.co.uk/Railway_Group_Standards*. Additionally, FRA will maintain a copy available for review.

Certain restrictions govern the option to apply the GM/RT2100 standard. GM/RT2100 is a safety standard that applies to trains operating in the U.K. The standard mandates requirements for the design and integrity of rail vehicle structures, including interior fixtures. The standard requires rail vehicle body structures to comply with the requirements in EN 12663 and EN 15227. The interior fixture attachment strength requirements in GM/RT2100 are consistent with the carbody deceleration limits in EN 12663 and EN 15227.

The structural carbody requirements of particular relevance in EN 12663 specify minimum proof loads for equipment attachment during normal operation of the vehicle. The mass of the fixture is multiplied by specified accelerations. For passenger coach cars, the accelerations in the longitudinal, lateral, and vertical directions are ±5g, ±1g, and +3/−1g, as stated in Section 6.5.2, Tables 13, 14, and 15 respectively.

The structural carbody requirements of particular relevance in EN 15227 are associated with a dynamic collision scenario (Section 5, Table 2), in which the mean longitudinal vehicle decelerations in the survival spaces for power cars and coach cars are limited to 5g for a 36 kph (22.4 mph) collision with a like train (Section 6.4.1).

If the option to use GM/RT2100 is exercised to demonstrate adequate attachment strength of the interior fixtures in Tier III trainsets, then data must be provided to demonstrate that the average longitudinal deceleration of the CG of each vehicle during the dynamic collision scenario does not exceed 5g in any 100-ms time period. Suitable evidence would include a plot of the 100-ms running average deceleration versus time for the duration of the collision scenario. The average deceleration over a 100-ms time period is necessary to account for large decelerations higher than the mean deceleration for sustained periods (*i.e.,* any period lasting more than 100 ms), which could result in interior fitting attachment failure. Without suitable evidence, there is no assurance the less stringent 5g attachment strength requirement is adequate for the particular trainset under evaluation. If the adequacy of the attachment strength is not demonstrated, then the GM/RT2100 option cannot be used and the crashworthiness of interior fittings must comply with the current Tier I requirements in § 238.233 and APTA standard PR–CS–S–006–98.

In addition, if the option to comply with GM/RT2100 is exercised, then this proposed paragraph would require that interior crashworthiness be evaluated based on a minimum lateral acceleration of 3g—not the 1g permitted in GM/RT2100. FRA has never found the 1g lateral acceleration requirement adequate for the U.S. rail operating environment. Thus, the proposed rule would increase the minimum lateral acceleration requirement to 3g. Further, the use of the GM/RT2100 standard must be carried out consistent with any conditions identified in the railroad's FRA-approved Tier III Safe Operation Plan. The Tier III Safe Operation Plan must demonstrate that interior fixtures provide an equivalent level of safety during accidents at any speed as equipment that complies with the requirements in § 238.233 and APTA PR–CS–S–006–98. The Tier III Safe Operation Plan must address the collision consequences associated with interior fixtures designed to withstand acceleration forces of 5g longitudinally, 3g laterally, and 3g vertically (5g/3g/3g) as opposed to 8g/4g/4g. FRA is concerned that interior fixtures designed to withstand average decelerations of less than 5g may not have a sufficient factor of safety to remain attached during collisions

occurring at speeds above the collision design scenario speeds. Accordingly, some evidence must be provided to ensure that the interior fixtures do not detach during collisions at speeds above the collision design scenario speeds, or the likelihood of higher speed collisions has been significantly reduced to provide the same degree of risk for equipment whose interior fixture attachments have been designed to withstand 8g/4g/4g loading.

Section 238.735 Seat Crashworthiness (Passenger and Cab Crew)

Proposed paragraph (a) contains the requirements for passenger seating crashworthiness in Tier III trainsets. As in § 238.733 above, FRA proposes two ways to demonstrate adequate attachment strength.

Proposed paragraph (a)(1) provides the first means: Passenger seating must meet the requirements of § 238.233 and APTA PR–CS–S–016–99, Rev. 2 (previously designated as SS–C&S–016, Rev. 2), ''Standard for Passenger Seats in Passenger Rail Cars,'' Authorized October 2010. FRA proposes to incorporate this APTA standard by reference into this paragraph and paragraph (j) of appendix G to this part. APTA PR–CS–S–016–99 addresses design guidelines, recommendations, and requirements for passenger seats installed in passenger equipment that is part of the general railroad system of transportation. APTA PR–CS–S–016–99 is available to all interested parties online at *www.apta.com*. Additionally, FRA will maintain a copy available for review. However, the rule would not require compliance with section 6.0 of this APTA standard, ''Seat durability testing.'' Seat durability testing is beyond the scope of this proposal because the testing focuses on the optimal life of the seats—not their crashworthiness performance.

Proposed paragraph (a)(2) describes the second way to demonstrate compliance. This proposed option explains that passenger seating may comply with the requirements in Section 6.2, ''Seats for passengers, personnel, or train crew,'' of GM/RT2100, which FRA proposes to incorporate by reference into this paragraph. Section 6.2 contains design specifications and tolerances for passenger and crew seating. GM/RT2100 is available to all interested parties online at *www.rgsonline.co.uk/Railway_Group_Standards*. Additionally, FRA will maintain a copy available for review.

The option proposed in paragraph (a)(2) offers alternative test conditions and performance requirements for evaluating seat crashworthiness. The applicable dynamic seat test procedures are defined in appendix E to GM/RT2100. GM/RT2100 utilizes Hybrid III 50th-percentile male anthropomorphic test devices (ATDs), and the procedures to prepare the ATDs are defined in appendix G to GM/RT2100. The applicable injury criteria and survival space requirements are defined in appendix H to GM/RT2100. Further, the test conditions and performance requirements in GM/RT2100 are aligned with the structural design requirements in EN 12663 and EN 15227, whereas the seat test conditions and performance requirements in APTA PR–CS–S–016–99, Rev. 2, are aligned with the structural design requirements in subpart C of part 238.

Nonetheless, please note that if paragraph (a)(2) is used for demonstrating compliance with the seat crashworthiness requirements, then this proposed paragraph would require that interior crashworthiness be evaluated based on a minimum lateral acceleration of 3g—not 1g as permitted in GM/RT2100. As noted above, FRA found the 1g lateral acceleration requirement inadequate. Thus, the proposed rule would increase the minimum lateral acceleration requirement to 3g. Moreover, the use of the GM/RT2100 standard must be carried out consistent with any conditions identified in the railroad's FRA-approved Tier III Safe Operation Plan. The Tier III Safe Operation Plan must demonstrate that interior fixtures provide an equivalent level of safety during accidents at any speed as equipment that complies with the requirements in § 238.233 and APTA PR–CS–S–006–98. For further discussion of these requirements, see the discussion in § 238.733, above.

Proposed paragraph (b) describes the requirements for the crashworthiness of seats provided for an employee in the cab of a Tier III trainset. Unlike passenger seating, cab seats must comply with the requirements in § 238.233(e), (f) and (g), and the performance, design, and test criteria of AAR–RP–5104, ''Locomotive Cab Seats,'' April 2008, which FRA proposes to incorporate by reference in this paragraph and paragraph (k)(2) of appendix G to this part. (This AAR publication is found in Section M of AAR's ''Manual of Standards and Recommended Practices.'') FRA is not proposing an optional alternative compliance demonstration. AAR–RP–5104 covers the performance and design requirements and performance tests for the construction of locomotive cab seats on road locomotives. AAR–RP–5104 is available to all interested parties online at *www.arrpublications.com* for a fee. Additionally, FRA will maintain a copy available for review.

Section 238.737 Luggage Racks

Proposed paragraph (a) contains requirements to constrain the longitudinal and lateral motion of articles stowed in luggage racks. FRA intends for these proposed requirements to maintain luggage accessibility while minimizing the risk of hazardous projectiles. The proposed transverse dividers are intended to limit the longitudinal motion of luggage not only in collisions but also during normal operations. In this regard, the proposed downward slope (from the aisle to the adjacent side-wall) of luggage racks is principally intended to restrain the lateral motion of luggage during normal operations. By inhibiting the distance stowed articles may move, the velocity of such items due to longitudinal and lateral train accelerations is minimized, which also minimizes their associated kinetic energy when striking another object.

Proposed paragraph (b) describes two ways to comply with the structural requirements for luggage racks. The first, in paragraph (b)(1), is to comply with § 238.233 as provided for other interior fixtures. The second, in paragraph (b)(2), is to comply with Section 6.8, ''Luggage stowage'' of GM/RT2100, which FRA proposes to incorporate by reference in this paragraph. Section 6.8 contains the requirements for luggage stowage, either on the floor or in overhead racks. As noted above, GM/RT2100 is available to all interested parties online at *www.rgsonline.co.uk/Railway_Group_Standards*. Additionally, FRA will maintain a copy available for review. This proposed option offers alternative performance requirements for evaluating luggage racks. The luggage attachment strength requirements in GM/RT2100 are aligned with the structural design requirements in EN 12663 and EN15227, whereas the luggage rack attachment strength requirements in § 238.233 are aligned with the structural design requirements of subpart C of this part. A discussion of these requirements is in § 238.733 and in the Technical Background and Overview section of this NPRM above.

Emergency Systems

Section 238.741 Emergency Window Egress and Rescue Access

Section 238.741 proposes requirements for emergency egress and rescue access through windows or alternative openings in passenger cars as

part of an emergency window egress and rescue access plan for Tier III trainsets. The ETF recognized that any regulation would need to allow multiple approaches to facilitate the adoption of service-proven, high-speed trainset technology. Specifically, the methods used to manufacture high-speed trainsets are often governed by consideration of the effects of aerodynamics and noise; and together with the potential need to pressurize occupied compartments, these can have a particular effect on the way window glazing is installed and mounted in some trainset designs. Therefore, the ETF decided to recommend performance-oriented requirements to allow necessary flexibility where an appropriate safety case can be made.

FRA agrees with the ETF's recommendation. Proposed paragraph (a) would allow a railroad to submit an emergency window egress and rescue access plan during the design review stage for FRA approval if the trainset design is not compatible with the emergency system requirements of §§ 238.113 and 238.114. A railroad may elect to employ an alternative feature or approach that demonstrates an equivalent or superior level of safety. Such an approach might involve use of an emergency egress window panel/door exit similar to the over-wing exits on aircraft and sharing characteristics of a removable panel for vestibule and other interior doors intended for passage through a passenger car, as required by § 238.112(f), rather than an emergency window exit per se.

In addition, proposed paragraph (b) specifically addresses the performance of emergency window exits in Tier III trainsets in terms of ease of operability (*e.g.,* removal). Specifically, paragraph (b) recognizes that alternative removal methods may need to be employed for these types of trainsets. Thus, it would allow alternative methods to remove window glazing, such as use of a conspicuously identified tool, or other mechanism, to expeditiously and safely remove the glazing. The emergency window egress and rescue access plan must document that any alternative method employed is as safe as that provided by the emergency window exit ease of operability requirements in § 238.113(b). In addition, the railroad must include a provision in its Tier III ITM plan to inspect for the presence of the identified tool or other mechanism at least each day the trainset is in service.

FRA notes that requirements for the ease of operating rescue access windows are provided in § 238.114(b). As applied to Tier III trainsets, this paragraph would require that each rescue access window (or its alternative) be capable of removal without unreasonable delay by an emergency responder using either a provided external mechanism, or tools or implements commonly available to the responder in a passenger train emergency. FRA believes these existing requirements are broad enough to apply to Tier III trainsets and alternative rescue access windows if utilized under an approved emergency window egress and rescue access plan.

Proposed paragraph (c) addresses window opening dimension requirements for both emergency egress and rescue access windows in Tier III trainsets. If the dimensions of window openings do not comply with the minimum requirements in §§ 238.113 or 238.114, then the emergency window egress and rescue access plan must demonstrate use of window openings of different dimensions provides at least an equivalent level of safety. This proposed paragraph acknowledges the size of windows may vary greatly between designs and not necessarily reflect the types of windows found on traditional Tier I passenger cars. Proposed paragraph (d) specifically addresses the use of emergency egress panels or additional door exits in the alternative to emergency window exits or rescue access windows. The railroad would be required to submit a plan demonstrating the means of emergency egress or rescue access employed provides an equivalent, or superior, evacuation time for the same number of occupants, as a layout of comparable size and configuration consistent with §§ 238.113 or 238.114, or both, as appropriate. The plan would also address the location, design, and signage and instructions for the alternative emergency evacuation openings. As discussed in paragraph (a), FRA recognizes that railroads may need to employ alternative features or approaches for evacuating passenger car occupants in Tier III trainsets, and one such approach might involve use of an emergency egress window panel/door exit rather than an emergency window exit per se.

FRA makes clear that its approval of any alternative emergency evacuation arrangement would take into account that emergency window exits themselves provide a supplementary means of emergency egress in life-threatening situations, should doors be rendered inaccessible or inoperable. Accordingly, while door exits serve as the preferred means of egress in an emergency situation, the railroad would be required to demonstrate that use of additional door exits, instead of emergency window exits or rescue access windows, would not diminish safety. Specifically, the railroad would be required to demonstrate that the risk of carbody distortion and other such risks that could render the door exits inoperable or inaccessible would be addressed so that at least an equivalent level of safety is provided.

Section 238.743 Emergency Lighting

With one exception, the proposed emergency lighting requirements for Tier III trainsets would be the same as the existing emergency lighting requirements of § 238.115 for passenger trainsets, as stated in proposed paragraph (a). The exception would be for emergency lighting back-up power systems, permitting alternative crash loadings instead of the requirements in § 238.115(b)(4)(ii). This proposed exception is detailed in paragraph (b), under which a railroad may seek to use the loading requirements defined in Section 6.1.4, ''Security of furniture, equipment and features,'' of GM/RT2100. In particular, these loading requirements are the same as those proposed for alternatively demonstrating adequate attachment strength of interior fixtures in Tier III trainsets discussed in § 238.733, above. Accordingly, both the interior lighting fixtures and their emergency back-up power systems would be subject to the same, proposed alternative loading requirements. As in proposed § 238.733, use of the alternative loading requirements would be carried out consistent with any conditions identified in the railroad's FRA-approved Tier III Safe Operation Plan.

Cab Equipment

Section 238.751 Alerters

In this section, FRA proposes to introduce requirements for alerters for Tier III passenger trainsets. The current requirements for alerters on Tier I passenger equipment can be found at § 238.237, and those for Tier II passenger equipment can be found principally at § 238.447 as well as at § 238.445. The regulatory text in this proposed section for alerters and in proposed § 238.753 for sanders was developed by the BTG, which was formed by the ETF to address Tier III braking requirements. The BTG mandate was to develop performance-based requirements that would accommodate existing, high-speed trainset technology without regard to its design. Many of the proposed requirements for alerters and sanders make reference to the need for accommodating provisions in the railroad's Tier III Safe Operation Plan.

This is necessary to accommodate the diversity of high-speed trainsets and the various ways in which the specified requirements may actually be implemented. FRA notes that the proposed requirements for alerters and sanders represent only a portion of the cab equipment provisions that would be applicable to Tier III passenger equipment. FRA would specifically address other Tier III cab features in future rulemaking.

Proposed paragraph (a) would require installation of an alerter in the operating cab of each Tier III trainset, unless the trainset is operating in a territory where alternate technology is available to provide the same functions. This provision is proposed to accommodate alternate designs and technologies that would address this safety feature.

Proposed paragraphs (b) through (d) describe the high-level functionality that an alerter, if present, must provide. Upon activation of the alerter, engineer acknowledgment must occur within a prescribed period of time as defined in the railroad's Tier III Safe Operation Plan in order for the engineer to remain in control of the trainset. Failure to acknowledge the alerter within the prescribed time period would result in the automatic initiation of a retrievable, full service brake application; the full service brake application would be recoverable only by intervention of the engineer, who must acknowledge the alerter and actively issue a command for brake application. These proposed requirements are consistent with those for Tier I and Tier II passenger equipment, yet would provide a greater level of specificity.

As noted, this section would allow use of an alternate technology to provide the same function(s) as an alerter. If such alternate technology is used, in whole or in part to provide the required functionality, proposed paragraph (e) would require the railroad to conduct a hazard analysis to be included in the railroad's Tier III Safe Operation Plan. The analysis must demonstrate that the use of any alternate technology to perform the function(s) of an alerter provides at least an equivalent level of safety to the function(s) the alerter would be required to perform.

Section 238.753 Sanders

In this section, FRA is proposing the introduction of requirements for sanders for Tier III passenger trainsets. Deliberations of the BTG included discussion of whether sanders would be present on Tier III trainset equipment. The BTG decided that since the use of sanders is not prohibited in any way, proposed regulations should be developed to accommodate this possibility.

The current requirements for sanders are in § 229.131 of this chapter. Sanders represent only a portion of the regulations residing in 49 CFR part 229, Locomotive Safety Standards, which may be applicable to Tier III passenger equipment. As noted above, the 229/ITM Task Group is undertaking the effort to develop Tier III equivalents of applicable provisions in 49 CFR parts 229 and 238, including inspection, testing, and maintenance requirements for Tier I and Tier II passenger equipment, which may be addressed in future FRA rulemaking(s).

Proposed paragraph (a) addresses the fact that sanders are not required for Tier III trainsets, but acknowledges that the railroad's Tier III Safe Operation Plan may include such requirements. If sanders are present, they must be operational.

Proposed paragraph (b) makes use of existing provisions in 49 CFR part 229, specifically § 229.131(a), (b), and (d) of this chapter, which address where to apply sand, actions to take when sanders become inoperative en route, and how to identify equipment with defective sanders. Nonetheless, the proposed text would make clear that the requirements of § 229.9, Movement of non-complying locomotives, and § 229.23, Periodic inspection: General, do not apply. Instead, the requirements of § 238.17, Movement of passenger equipment with other than power brake defects, would apply to Tier III trainsets with defective sanders. Likewise, instead of the requirements of § 229.23, requirements for the periodic inspection of a Tier III trainset with defective sanders would be defined in the railroad's ITM Plan. In this regard, proposed paragraph (c) would require the railroad's ITM plan to specify the overall inspection, testing and maintenance requirements for Tier III trainsets equipped with sanders.

Subpart I—Inspection, Testing, and Maintenance Requirements for Tier III Passenger Equipment

Proposed subpart I would contain ITM requirements for Tier III passenger equipment. Recommendations for ITM requirements specific to the brake system were developed by the BTG and would be codified in §§ 238.803, and 238.805. Recommendations for more comprehensive ITM requirements for Tier III passenger equipment are being developed by the 229/ITM Task Group for future rulemaking. While these recommendations are still being developed, FRA envisions that the requirements of this subpart would be based largely on the existing requirements for Tier II trainsets in subpart F of this part. This proposed subpart I therefore serves as a placeholder for additional requirements that may be proposed.

Section 238.801 Scope

This section would establish the general applicability of the ITM requirements specified in this part for an operation that falls within the definition of Tier III.

Section 238.803 Inspection, Testing, and Maintenance Requirements; Brake System

FRA is generally proposing to apply subpart F of this part 238 as the ITM requirements for brake systems of Tier III trainsets, as identified in proposed paragraph (a). FRA nonetheless emphasizes in proposed paragraph (b)(1) that the railroad's ITM plan would be required to contain a description of an appropriate brake test equivalent to that of a Class I brake test described in § 238.313. In addition, FRA proposes exceptions to the application of § 238.15, which would otherwise govern the movement of a Tier III trainset with a power brake defect, as provided in paragraph (b)(2). The BTG found these exceptions necessary for Tier III trainsets to accommodate the advanced technology available on such equipment. FRA agrees, and they would apply in three specific circumstances.

First, paragraph (b)(2)(i) proposes an exception to the requirement in § 238.15 that, in the event of an en route failure that causes power brakes to be cut out or renders them inoperative, would allow for the determination of the percentage of operative brakes in a Tier III trainset to be made by a technological method described in the railroad's Tier III Safe Operation Plan instead of the walking inspection required by § 238.15(c)(4)(iv). FRA expects that such a method would rely on diagnostic equipment on board the trainset, because visual inspection of the brake system may be difficult due to the expected aerodynamic features of the body of the trainset.

Second, to accommodate the variety of braking strategies employed in the design of Tier III trainsets, in paragraph (b)(2)(ii), FRA proposes that the formula for computing the percentage of operative brakes necessary for continued trainset operation in the event of partial brake system failure en route be provided in the railroad's Tier III Safe Operation Plan.

Finally, proposed paragraph (b)(2)(iii) would address implementation of operating restrictions for Tier III

trainsets, depending on whether they are in a shared right-of-way or not. When a Tier III trainset is operating in a right-of-way shared with Tier I passenger equipment or freight equipment, operating restrictions would be determined by the percentage of operative power brakes in the trainset based on the requirements of § 238.15. When a Tier III trainset is operating in a right-of-way exclusively for Tier III passenger equipment, operating restrictions would be defined in the railroad's Tier III Safe Operation Plan.

Section 238.805 Periodic Tests; Brake System

In this section FRA is proposing to specify periodic testing requirements for brake systems of Tier III trainsets. The proposed requirements in this section were derived from corresponding requirements in §§ 229.25 and 229.29 of this chapter deemed relevant to Tier III trainsets by the BTG and represent minimum requirements with which FRA agrees. To render them appropriate for Tier III technology, FRA's proposal avoids prescriptive standards and allows for particular details of the testing requirements (frequency, scope, etc.) to be determined by the railroad's FRA-approved ITM plan.

Subpart J—Specific Requirements for the Safe Operation Plan for Tier III Passenger Equipment

FRA proposes to add and reserve this subpart, which would contain the requirements for the Safe Operation Plan for Tier III Passenger Equipment. The actual requirements will be introduced in a subsequent rulemaking. While certain requirements of this proposed rule do make reference to the Safe Operation Plan for Tier III Passenger Equipment, FRA has elected not to include any general requirements for this plan in this NPRM. The ETF had not discussed such requirements in depth when FRA prepared this NPRM and FRA seeks the ETF's input on such requirements before addressing them in a future rulemaking. In the interim, FRA would work with any proposed Tier III operation to ensure that the specific requirements referencing a Safe Operation Plan for Tier III Passenger Equipment are properly addressed and documented.

Appendix B to Part 238—Test Methods and Performance Criteria for the Flammability and Smoke Emission Characteristics of Materials Used in Passenger Cars and Locomotive Cabs

To clarify the application of the floor fire test to Tier III passenger equipment, FRA proposes to add text to Note 16 of the table of ''Test Procedures and Performance Criteria for the Flammability and Smoke Emission Characteristics of Materials Used in Passenger Cars and Locomotive Cabs'' in paragraph (c) of appendix B to this part. FRA intends for this addition to address how the floor fire test method requirements of ASTM E–119–00a would apply to the undercarriage design common to most high-speed trainsets. Unlike most conventional passenger equipment, most modern high-speed trainsets employ a material cowling that fully encloses the underframe of the vehicle, including any underfloor equipment, to improve aerodynamics and reduce noise. This material may be considered part of the floor assembly for the purposes of this test when the evaluation is considering a fire source that is under and external to this material. To apply the requirement in this manner, the railroad must also conduct a fire hazard analysis that includes the considerations in Note 17 of this table, to protect against a fire source within the space between the undercarriage and the cowling.

Appendix F to Part 238—Alternative Dynamic Performance Requirements for Front End Structures of Cab Cars and MU Locomotives.

FRA is amending appendix F to part 238 to apply this appendix to Tier III passenger equipment. As noted in the discussion of § 238.711, FRA proposes that the cab ends of Tier III trainsets comply with the requirements of appendix F to this part to demonstrate the integrity of the end structure. FRA added appendix F to this part to provide dynamic performance alternatives to the collision post and corner post requirements in §§ 238.211 and 238.213 for Tier I passenger equipment. See 75 FR 1180. Because appendix F would continue to contain alternative requirements for Tier I passenger equipment, and also apply as the mandatory requirements for Tier III passenger equipment, FRA may make additional conforming changes to this appendix at the final rule stage if necessary to clarify the application of this appendix to both Tier I and Tier IIII passenger equipment. FRA also notes that appendix F would apply to Tier I alternative passenger trainsets under proposed appendix G to demonstrate the integrity of the end structure at the cab ends of these trainsets. While appendix G would itself contain alternative requirements, all the requirements of appendix G are intended to apply as a whole. Accordingly, FRA may make additional conforming changes to this appendix F at the final rule stage necessary to clarify application of this appendix F to Tier I alternative passenger trainsets.

Appendix G to Part 238—Alternative Requirements for Evaluating the Crashworthiness and Occupant Protection Performance of a Tier I Passenger Trainset

FRA is proposing to add appendix G to part 238 to provide alternative crashworthiness and occupant protection performance requirements for Tier I passenger trainsets instead of the conventional requirements of §§ 238.203, 238.205, 238.207, 238.209(a), 238.211, 238.213, and 238.219 in subpart C of this part. The technical contents of proposed appendix G remain materially unchanged from those developed for the original Technical Criteria and Procedures Report.

FRA intends for these alternative requirements to be applied to a Tier I trainset as a whole. Accordingly, compliance must be demonstrated either through application of the conventional requirements in subpart C, or through application of the requirements in this appendix G, not a combination of both. They also apply in addition to the requirements of §§ 238.209(b), 238.215, 238.217, and 238.233, APTA standards for occupant protection, and an AAR recommended practice for locomotive cab seats, as specified in this appendix. While the appendix may refer to specific units of rail equipment in a trainset, the alternative requirements in this appendix would apply only to a Tier I trainset as a whole, as noted above.

In general, where alternatives to the conventional Tier I requirements are given in this appendix G, those requirements are also identified in the Tier III requirements in subpart H—Specific Requirements for Tier III Passenger Equipment. See the discussion in the section-by-section analysis for subpart H.

Use of this appendix to demonstrate alternative crashworthiness and occupant protection performance for Tier I passenger trainsets is subject to FRA review and approval under § 238.201.

Proposed paragraphs (a) through (d) provide alternatives to the Tier I requirements for occupied volume integrity, override protection, and fluid entry inhibition and associated penetration resistance. The referenced alternatives are identified in the proposed Tier III requirements in subpart H. The alternatives are intended to be applied to the individual units, such as the individual cars, making up

a Tier I alternative passenger trainset, as specified.

Proposed paragraph (e) is intended to be applied to each cab end of a Tier I alternative passenger trainset. This paragraph states that each cab end must comply with the requirements given in appendix F to this part. Further, this paragraph explains that while appendix F uses specific language to refer to ''corner posts'' and ''collision posts,'' alternative designs may not necessarily contain these discrete structures. Accordingly, this paragraph provides that the requirements of appendix F apply at the specified locations, regardless of whether the structure at the specified locations is a post. Overall, this paragraph is intended to require an equivalent level of performance from an alternative Tier I design to that of a conventionally-designed, Tier I compliant vehicle, without overly constraining the design of the cab end structure.

Proposed paragraph (f) provides alternatives to the end structure integrity requirements for each non-cab end of each unit of a Tier I trainset. The referenced alternatives are identified in the proposed Tier III requirements in subpart H.

As proposed in paragraph (g), a Tier I alternative passenger trainset is subject to the conventional requirements for roof and side structure integrity in §§ 238.215 and 238.217. These requirements are sufficiently broad to apply to Tier I passenger trainsets of alternative designs. Accordingly, no regulatory alternatives are needed.

Proposed paragraph (h) provides alternatives to the truck attachment requirements for each unit of a Tier I alternative trainset. The referenced alternatives are identified in the proposed Tier III requirements in subpart H.

Proposed paragraphs (i), (j), and (k) provide that a Tier I alternative passenger trainset must comply with the conventional Tier I regulations and industry safety standards for interior fixture attachment, passenger seat crashworthiness, and crew seat crashworthiness, respectively.

Notably, in paragraph (i), FRA is proposing to incorporate by reference APTA standard PR–CS–S–034–99, Rev. 2, ''Standard for the Design and Construction of Passenger Railroad Rolling Stock,'' Authorized June 2006, for interior fixtures. The standard is intended to address forces applied to the carbody and truck structures during collisions, derailments, and other accident conditions. APTA PR–CS–S–034–99 is available to all interested parties online at *www.apta.com*. Additionally, FRA will maintain a copy available for review.

Further, in paragraph (j), FRA proposes to incorporate by reference APTA standard PR–CS–S–016–99, Rev. 2, ''Standard for Passenger Seats in Passenger Rail Cars,'' Authorized October 2010, with the exception of Section 6 of the standard, which is related to the durability testing of seats. FRA considers the durability testing of seats to be beyond the scope of this proposed regulation for the same reasons discussed above, under § 238.735.

Appendix H to Part 238—Rigid Locomotive Design Computer Model Input Data and Geometrical Depiction

FRA proposes to add this appendix to formally provide input data and a geometrical depiction necessary to create a computer model of the rigid (conventional) locomotive design proposed in § 238.705(a)(4) to use to evaluate the OVI of a Tier III trainset (and a Tier I alternative passenger trainset under proposed appendix G) in a dynamic collision scenario. Proposed § 238.705(a) outlines the required conditions under which a dynamic collision scenario would be performed involving an initially-moving train impacting an initially-standing train having the rigid (conventional) locomotive leading its consist. As proposed in § 238.705(a)(4), the initially-standing train would be made up of a rigid locomotive and five identical passenger coaches having the following characteristics: The locomotive weighs 260,000 pounds and each coach weighs 95,000 pounds; the locomotive and each coach crush in response to applied force as specified in Table 1 to § 238.705; and the locomotive has a geometric design as depicted in Figure 1 to this appendix H.

This appendix is intended to establish a consistent definition for locomotive geometry to be used to conduct dynamic computer simulations. The input data, in the form of an input file, contains the geometry for approximately the first 12 feet of the rigid locomotive design. Because this input file is for a half-symmetric model, a locomotive mass corresponding to 130,000 pounds of weight is provided for modeling purposes—half the 260,000 pounds of weight specified for the locomotive in § 238.705(a)(4). Figure 1 to this appendix provides two views of the locomotive's geometric depiction. FRA invites comment on whether the proposed approach is the best means to provide the data inputs necessary for the regulated community.

V. Regulatory Impact and Notices

A. Executive Orders 12866 and 13563 and DOT Regulatory Policies and Procedures

This proposed rule has been evaluated in accordance with existing policies and procedures, and determined to be significant under Executive Order 12866, Executive Order 13563, and DOT policies and procedures. 44 FR 11034 (Feb. 26, 1979). The proposed rule is ''economically significant'' rule as defined by Section 3(f)(1) of Executive Order 12866 because it is likely to have an effect of $100 million or more in a single year. FRA has prepared and placed in the docket a Regulatory Impact Analysis addressing the economic impacts of this proposed rule. The RIA presents estimates of the quantifiable costs likely to occur over the next 30 years of the rule as proposed, as well as estimates of quantifiable benefits that would be generated by the rule as proposed. Informed by its analysis, FRA believes that this proposed rule would result in positive net benefits. The proposed rule would help address several limitations in the CFR pertaining to passenger equipment.

FRA is amending its passenger equipment (passenger locomotives (power units), coaches and train sets) safety regulations. This proposed rule would add a new equipment tier (Tier III) to facilitate the safe implementation of HSR up to 220 mph on dedicated rail lines. The proposal would also establish alternative crashworthiness performance standards to qualify passenger rail equipment for Tier I operations (Tier I alternative). In addition, FRA proposes to increase the maximum allowable speed for Tier II operations from 150 mph to 160 mph. The ETF developed the technical requirements and RSAC approved them. This proposal attempts to address several limitations in the CFR pertaining to passenger equipment. Existing passenger equipment safety standards in 49 CFR part 238 do not address safety requirements for passenger rail equipment at speeds above 150 mph. Furthermore, the current regulatory framework establishes Tier I safety compliance by providing equipment design requirements. Existing regulations for Tier I equipment limit the application of contemporary design techniques and recent technology that can improve safety. Additionally, the NPRM would increase the allowable speed for Tier II equipment making it consistent with recent changes in 49 CFR parts 213 and 238 relative to

Vehicle/Track Interaction (VTI) Safety Standards.

FRA believes that approximately $4.6 billion in quantifiable costs would be borne by the industry over a future 30-year period, with a present value of $2 billion (when discounted at a 7-percent rate) or $3.2 billion (when discounted at a 3-percent rate). The identified quantified costs are related to testing to demonstrate compliance with either the proposed Tier I alternative or Tier III standards, inspection, testing and maintenance of brakes, and to expected trainset modifications. The proposed Tier I standards would provide only an option for railroads to use a different type or design of passenger equipment in Tier I service and would not impose any cost on existing rolling stock or new equipment qualifying under existing regulations. The proposed Tier III standards would provide an option to FRA's existing regulatory approach for permitting railroads to operate equipment in new Tier III service, which is by issuing rules of particular applicability. The proposed Tier III requirements would not impose any cost on existing rolling stock or new equipment qualifying under existing regulations (existing passenger rolling stock is Tier I and II; there is no Tier III in the U.S. as of yet).

REGULATORY COST SUMMARY

[Quantified estimates using a future 30-year time horizon]

Section	Description	Undiscounted	3%	7%
	Equipment Related			
3.2.1	Trainset Tests (Tier I)	$2,976,600	$1,993,277	$1,310,701
3.2.1	Trainset Tests (Tier III)	2,928,000	2,008,213	1,334,302
3.2.2	Trainset Maintenance (Tier I)	36,000,000	23,520,529	14,890,849
3.1.4	Costs Related to ITM Brake Requirements for Tier III	17,150,722	10,147,114	5,548,586
3.2.3	Trainset Modifications	88,111,000	66,100,340	48,147,529
	Equipment Total	147,166,322	103,769,473	71,231,967
	Infrastructure Related			
3.2.3	Infrastructure Upgrade (Tier I)	400,000,000	253,653,516	154,394,117
3.2.3	Infrastructure Upgrade (Tier III)	3,960,000,000	2,737,015,815	1,700,773,286
3.2.4	Track Maintenance (Tier I)	14,577,720	8,082,124	4,044,953
3.2.4	Track Maintenance (Tier III)	101,750,000	54,984,200	25,785,984
	Infrastructure Total	4,476,327,720	3,053,735,655	1,884,998,340
	Total (Equipment and Infrastructure) [18]	4,623,494,042	3,157,505,130	1,956,230,309
	Annualized	154,116,468	161,093,573	157,645,5645

The proposed rule would have a positive effect on society and the safety performance of the passenger railroad system. Some of the identified safety benefits are due to the ability to adopt safe equivalent technology and best practices to better the current safety environment, and to apply future technological advancements for the improvement of rail safety. Infrastructure-related benefits dwarf other quantified benefits (*i.e.,* safety, equipment design and engineering, and manufacturing benefits). Infrastructure benefits would be generated by the ability of railroad operators to take advantage of a blended operating environment, avoiding costly new construction and maintenance of dedicated track and right-of-way acquisition. This benefit is especially attractive to railroad operators that provide service in areas with high population density because right of way acquisition and new railroad construction is significantly more expensive and complex. This alternative would increase the probability that new services are introduced and reduce the need for new construction in densely populated areas.

The U.S. market would benefit from the regulatory proposal because the new safety standards would allow more manufacturers to supply rolling stock and would allow operators to take advantage of a wider variety of trainsets. Furthermore, the proposal would allow Tier I alternative and Tier III operations to use service-proven platforms with the latest technology available. These benefits would be achieved by ensuring that foreign technology meets FRA's safety requirements and that all equipment suppliers comply with the same safety standards. This RIA estimated a range in total benefits that is between $8.7 billion and $16.8 billion over the next 30 years. Of the total, $1.2 billion to $2.1 billion can be allocated to equipment benefits while the remainder is infrastructure related ($7.5 billion to $14.7 billion). Table 2 provides more detailed benefit estimates and their discounted values at the 3- and 7-percent levels.[19]

[18] For the purposes of demonstrating a range of costs, the lower end of the range for total Equipment and Infrastructure is estimated to be approximately $4.6 billion. Discounted cost estimates are approximately $3.1 billion at the 3-percent level and $1.9 billion at the 7-percent level.

[19] Tier III benefits are uncertain because they are based on assumptions regarding the future growth of high-speed rail operations and how those operations will be incorporated into the U.S. rail network. It is possible in the extreme, benefits for Tier III equipment, including infrastructure benefits, will be zero, which would occur if no high-speed rail projects come to fruition over the forecast horizon. Similarly, the estimated infrastructure benefits hinge on the assumption of not having to build dedicated HSR track for the whole system (*i.e.,* they represent savings from being able to operate HSR using shared infrastructure). If the baseline is shared infrastructure, then these benefits will not be realized. Tier III benefits, including infrastructure benefits, are provided for expository purposes. Similarly, Tier I benefits from having performance standards are challenging to quantify, as is always the case for such benefits. However, given that they provide an option to design standards, operators would only comply with such standards, voluntarily making investments, if they found it beneficial to do so.

REGULATORY BENEFIT RANGE SUMMARY

[Quantified estimates use a future 30-year time horizon]

Section	Description	Undiscounted	3%	7%
	High Range			
4.1.4	Trainset Components (Tier I alternative)	$575,000,000	$370,129,150	$229,818,248
4.1.4	Trainset Component [20] (Tier III)	1,023,760,569	791,314,162	591,529,134
4.1.5	Trainset Engineering [21] (Tier I alternative)	47,250,000	30,414,961	18,885,064
4.1.5	Trainset Engineering (Tier III)	221,130,000	170,728,740	127,624,437
4.1.7	Safety (Tier I alternative)	52,597,299	33,483,989	20,553,470
4.1.8	Manufacturing Certainty (Tier I alternative and Tier III)	114,912,792	86,204,443	62,789,786
4.1.9	Trainset Maintenance (Tier I alternative and III)	38,304,264	28,734,814	20,929,929
	Equipment Subtotal	2,072,704,774	1,511,010,260	1,072,130,069
4.1.6	Infrastructure Subtotal	14,680,000,000	9,735,682,060	5,991,665,872
	Total	16,752,704,774	11,246,692,320	7,063,795,941
	Annualized	854,710,589	573,797,912	569,245,910
	Low Range			
4.1.4	Trainset Components (Tier I alternative)	115,000,000	74,025,830	45,963,650
4.1.4	Trainset Component (Tier III)	761,257,859	585,392,942	433,067,170
4.1.5	Trainset Engineering (Tier I alternative)	9,450,000	6,082,992	3,777,013
4.1.5	Trainset Engineering (Tier III)	164,243,990	126,300,532	93,435,725
4.1.7	Safety (Tier I alternative)	52,597,299	33,483,989	20,553,470
4.1.8	Manufacturing Certainty (Tier I alternative and Tier III)	55,830,211	42,551,847	31,246,952
4.1.9	Trainset Maintenance (Tier I alternative and III)	17,389,930	9,336,581	4,475,199
	Equipment Subtotal	1,175,769,289	877,174,713	632,519,178
4.1.6	Infrastructure Subtotal	7,480,000,000	5,169,918,763	3,212,571,763
	Total	8,655,769,289	6,047,093,477	3,845,090,941
	Annualized	288,525,643	308,518,230	309,862,050
151	Net Benefits—High	12,129,210,732	8,089,187,192	5,107,565,634
	Net Benefits—Low	4,063,300,247	2,912,179,307	1,905,057,812

As shown on Table 2, undiscounted net regulatory benefits would be substantial and would be between $4.1 billion and $12.1 billion. Discounted net benefits would be between $2.9 billion (low range) and $8.1 billion (high range) at the 3-percent level. And net benefits would be between $1.9 billion (low range) and $5.1 billion (high range) at the 7-percent level.

Alternatives Considered

One of the main purposes of the proposed regulation is to provide a set of minimum Federal safety requirements to determine whether passenger equipment platforms designed to contemporary standards outside of the U.S. are safe for operation in the U.S. rail environment. Traditionally, U.S. railroad safety regulations evolved as a consequence of specific accidents scenarios, which have led to the identification of specific risks in the operating environment. While FRA seeks to continue ensuring the safety risks are adequately addressed for the operating environment, the proposed rule places special emphasis on measures to avoid those risks rather than simply mitigating them.

Importantly, the proposed rule does not intend to adopt or incorporate by reference a specific international design standard. Doing so may preclude certain equipment manufacturers from competing in the U.S. market and FRA intends that, to the greatest extent possible, the U.S. passenger rail market be open to global manufacturers.

The alternatives FRA considered in establishing the proposed safety requirements for Tier III trainsets, are the European and Japanese industry standards. These options provide a continuum of safety requirements for a range of aspects such as: Varying levels of regulatory requirements; market accessibility; benefits and costs; and operational efficiency and safety.

FRA prepared a high-level cost comparison of those options based on the key attributes of the alternatives and the effect of those attributes on societal welfare and the regulatory purpose. However, it is important to note this is not a direct comparison between comparable requirements/standards. FRA is comparing the technical requirements of other established high-speed rail standards to illustrate the primary differences. FRA expects service-proven equipment produced to these international standards can comply with the proposed regulation with no significant changes to the underlying design platform.

European Platform

Passenger rail equipment crashworthiness and occupant protection design standards have been largely standardized by Euronorms (EN) 12663 and 15227. These European ''norms'' [22] or standards were developed and established by the European Committee for Standardization (CEN). These ''norms'' are not only intended to serve as safety standards, but also to ensure efficiency and performance of products and services and improve the function of markets by removing barriers to trade.

FRA estimated the costs required to modify European trainsets to meet the proposed Tier III requirements in this rule. FRA concludes that there are no significant differences between trains built to the design standards contained in ENs 12663 and 15227 and trains built to meet the crashworthiness and occupant protection requirements in the proposed rule. FRA estimates that on average trainset prices would increase $310,250 or 0.62 percent, per trainset. These modifications would be justified

[20] Trainset components are the parts of the trainsets, *e.g.* bogies for the coaches, traction motor for the power unit, etc.

[21] Trainset Engineering is the design and implementation of how the trainsets will be put together and constructed.

[22] ''Standard'' means ''norme'' in French and ''norm'' in German. *https://www.cen.eu/work/ENdev/whatisEN/Pages/default.aspx.*

because they represent a nominal increase in cost while maintaining a level of occupant protection appropriate for the U.S. passenger rail operating environment.

Japanese Platform

Japan introduced the Shinkansen high-speed passenger rail system about 50 years ago. Railroad safety regulation is governed by the Railway Bureau, Ministry of Land, Infrastructure and Transport (MLIT) and is codified in the Technical Regulatory Standards on Railways.[23] These technical standards are primarily performance based and railways have the obligation to conform its operations, equipment and infrastructure to these standards. In the case of the Shinkansen, the railway is passenger-only and the rail line is entirely dedicated to high-speed rail passenger service. This is the substantial difference in the design of Shinkansen trainsets operating in Japan and passenger rail trainsets currently operating in the U.S. The key to the Japanese high-speed rail network's ongoing safety and reliability is the ''principle of crash avoidance.'' Unlike the typical operating environment in the U.S., no conventional train service runs on the Japanese system and it has full grade separation.

Although FRA believes that the proposed Tier III requirements would allow Japanese trainsets to be modified for use in the U.S. market and be interoperable, it is also expected that those required modifications would be costly. Indeed, modifying advanced Japanese high-speed trainsets would likely be cost prohibitive to be interoperable on the U.S. system; FRA estimates $4.7 million per train set.

B. Regulatory Flexibility Act and Executive Order 13272

FRA developed the proposed rule in accordance with Executive Order 13272 (''Proper Consideration of Small Entities in Agency Rulemaking'') and DOT's procedures and policies to promote compliance with the Regulatory Flexibility Act (5 U.S.C. 601 *et seq.*) to ensure potential impacts of rules on small entities are properly considered.

The Regulatory Flexibility Act requires an agency to review regulations to assess their impact on small entities. An agency must conduct a regulatory flexibility analysis unless it determines and certifies that a rule is not expected to have a significant economic impact on a substantial number of small entities.

Existing Passenger Equipment Safety Standards in this part 238 do not specifically address safety requirements for passenger rail equipment at speeds above 150 mph. Furthermore, the current regulatory framework generally sets Tier I safety compliance through equipment design requirements, which limit the application of recent technology. The proposed regulation would change the existing passenger rail equipment safety regulatory framework by introducing a high-speed rail equipment category (Tier III) and establishing alternative compliance requirements for conventional train equipment (Tier I) that are more performance-based. Additionally, the NPRM would increase the maximum allowable speed for Tier II equipment to make it consistent with the corresponding speed range in FRA's Track Safety Standards for the track over which the equipment operates. This Initial Regulatory Flexibility Analysis is presented to comply with Executive Order 13272 and with the Regulatory Flexibility Act as part of the formal rulemaking process required by law.

FRA has initiated the proposed rulemaking using recommendations by FRA's RSAC. The proposed regulation would amend part 238 of chapter II, subtitle B of title 49, Code of Federal Regulations, to reflect new or modified safety requirements for Tier I and Tier III equipment, and to increase the authorized speed limit for Tier II equipment.

1. Description of Regulated Entities and Impacts

The ''universe'' of the entities under consideration includes only those small entities that can reasonably be expected to be directly affected by the provisions of this rule as proposed. For the proposed rule, there is only one type of small entity that would be affected: Small passenger railroads.

''Small entity'' is defined in 5 U.S.C. 601(3) as having the same meaning as ''small business concern'' under section 3 of the Small Business Act. This includes any small business concern that is independently owned and operated, and is not dominant in its field of operation. 5 U.S.C. 601(5) defines ''small entities'' as governments of cities, counties, towns, townships, villages, school districts, or special districts with populations less than 50,000.

The U.S. Small Business Administration (SBA) stipulates ''size standards'' for small entities. It provides that industry sectors relevant for the proposed rulemaking must not exceed the limits listed below (and still classify as a ''small entity''):[24]

- 1,000 employees for railroad rolling stock manufacturing.
- 1,500 employees for line haul operating railroads.
- 500 employees for motor and generator manufacturing.
- 500 employees for switching and terminal establishments.

Federal agencies may adopt their own size standards for small entities in consultation with SBA, and in conjunction with public comment. Under the authority provided to it by SBA, FRA published a final policy, which formally establishes small entities as railroads that meet the line haulage revenue requirements of a Class III railroad.[25] Currently, the revenue requirements are $20 million or less in annual operating revenue, adjusted annually for inflation. The $20 million limit (adjusted annually for inflation) is based on the Surface Transportation Board's threshold of a Class III railroad, which is adjusted by applying the railroad revenue deflator adjustment.[26] FRA is proposing to use this definition for this NPRM. Any comments received pertinent to its use will be addressed in the final rule.

Railroads

For purposes of this analysis, there are only two intercity passenger railroads, Amtrak and the Alaska Railroad. Neither is considered a small entity. Amtrak is a Class I railroad and the Alaska Railroad is a Class II railroad. The Alaska Railroad is owned by the State of Alaska, which has a population well in excess of 50,000. There are currently 28 commuter or other short-haul passenger railroad operations in the U.S., most of which are part of larger transportation organizations that receive Federal funds and serve major metropolitan areas with populations greater than 50,000. However, two of these passenger railroads do not fall in this category and are considered small entities: The Hawkeye Express and the Saratoga & North Creek Railway. The Hawkeye Express provides service to Iowa City, Iowa, and is owned by a Class III railroad, a small entity. The Saratoga & North Creek Railway started operations in 2011, serving several stations between North Creek and Saratoga Springs, New York, and meets

[23] *http://www.mlit.go.jp/english/2006/h_railway_bureau/Laws_concerning/14.pdf.*

[24] U.S. Small Business Administration, ''Table of Small Business Standards Matched to North American Industry Classification System Codes,'' effective November 5, 2010.

[25] See 68 FR 24891, May 9, 2003.

[26] For further information on the calculation of the specific dollar limit, please see 49 CFR part 1201.

the criteria to be considered a small entity.

It is important to note that the two railroads being considered in this analysis use passenger rolling stock that is different from the equipment covered by the proposed rulemaking. Furthermore, the Hawkeye Express and the Saratoga & North Creek Railway would be able to find their current trainset types in the market if they decided to acquire new rolling stock over the next 30 years.

This proposal does not increase costs for these small passenger railroads. FRA expects the cost to acquire passenger rail equipment would drop as a result of the proposed rulemaking. These two railroads would have more variety in trainset models available for passenger operations and options in companies supplying equipment in the U.S. market. Additionally, small railroads would enjoy lower prices as the U.S. passenger rail market is enlarged by the proposed rulemaking, enhancing economies of scale and increasing predictability for equipment orders.

Passenger Railroad Rolling Stock Manufacturing

The passenger rail and urban rapid transit equipment manufacturing sector in the United States has a fairly small number of firms with no more than 15 Original Equipment Manufacturers (OEM) and a few hundred component and subcomponent suppliers.[27] However, for this flexibility analysis, FRA is taking a broader approach by assessing the effect of the regulation as proposed on the railroad rolling stock manufacturing sector as defined by the North American Classification System (NAICS), which includes the passenger rail and urban rapid transit equipment manufacturing industry, but goes beyond by also covering freight and maintenance-of-way vehicles. This approach includes firms that currently do not manufacture passenger rail equipment, but can potentially enter the market. Based on data from the U.S. Census Bureau, employment on these industries is as follows:

- NAICS code 336510, Railroad rolling stock manufacturing, 159 firms in the industry, and 137 firms with less than 500 employees.
- NAICS code 335312, Motor and generator manufacturing, 428 firms in the industry, and 384 firms with less than 500 employees.

The main impact affecting these industries from the rule as proposed would be the qualification costs for Tier I alternative and Tier III trainsets. As noted in the Regulatory Impact Analysis, companies supplying trainsets covered by the rulemaking would be required to submit test and analysis results to demonstrate compliance with the safety requirements. However, in the case of rolling stock manufacturing, this cost would only be incurred by the OEM when submitting a qualification package, which would include details regarding the performance of the trainset model in the required tests and analyses. Therefore, small and very small firms supplying OEMs are not expected to be required to submit that information. Small firms could be expected to benefit from existing requirements for minimum domestic content as more trainsets are purchased by U.S. railroad operators. Small business would have the opportunity to supply OEMs with domestic inputs and to partner with larger firms to allow small domestic producers to meet the needs of the market being created by the regulatory proposal. This means that FRA expects the proposed rulemaking to have only a positive impact on these small entities as more of them are provided with the opportunity to enter the passenger railroad equipment manufacturing industry.

Significant Economic Impact Criteria

Previously, FRA sampled small railroads and found that revenue averaged approximately $4.7 million (not discounted) in 2006. One percent of average annual revenue per small railroad would be $47,000. FRA realizes that some railroads will have revenue than lower $4.7 million. However, FRA estimates that small railroads would not have any additional expenses over the next ten years to comply with the requirements as proposed in this NPRM. Based on this, FRA concludes that the expected burden of this rule as proposed would not have a significant impact on the competitive position of small entities, or on the small entity segment of the railroad industry as a whole.

Substantial Number Criteria

This final rule would likely burden all small railroads that are not exempt from its scope or application (See 49 CFR 238.3). Thus, as noted above this proposed rule would impact a substantial number of small railroads.

2. Certification

Pursuant to the Regulatory Flexibility Act (5 U.S.C. 605(b)), FRA certifies that this proposed rule would not have a significant economic impact on a substantial number of small entities. FRA invites all interested parties to submit data and information regarding the potential economic impact that would result from adoption of the proposals in this NPRM. FRA will consider all comments received in the public comment process when making a final determination for certification of the final rule.

C. Paperwork Reduction Act

The information collection requirements in this proposed rule are being submitted to the Office of Management and Budget (OMB) for review and approval in accordance with the Paperwork Reduction Act of 1995 (44 U.S.C. 3501 *et seq.*). The sections that contain the new, revised, and current information collection requirements and the estimated time to fulfill each requirement are as follows:

CFR section	Respondent universe	Total annual responses	Average time per response	Total annual burden hours
229.47—Emergency Brake Valve—Marking Brake Pipe Valve as such.	30 railroads	30 markings	1 minute	1
—DMU, MU, Control Cab Locomotives—Marking Emergency Brake Valve as such.	30 railroads	5 markings	1 minute	.08
238.7—Waivers	30 railroads	5 waivers	2 hours	10
238.15—Movement of passenger equipment with power brake defect.	30 railroads	1,000 tags	3 minutes	50
	30 railroads	288 tags	3 minutes	14
—Movement of passenger equipment—defective en route.	30 railroads	144 notices	3 minutes	7
Conditional requirement—Notice				

[27] Lowe, M., Tokuoka, S., Dubay, K., and Gereffi, G., ''U.S. Manufacture of Rail Vehicles for Intercity Passenger Rail and Urban Transit: A Value Chain Analysis,'' Center on Globalization, Governance & Competitiveness, June 24, 2010.

CFR section	Respondent universe	Total annual responses	Average time per response	Total annual burden hours
238.17—Limitations on movement of passenger equipment—defects found at calendar day insp. & on movement of passenger equipment—develops defects en route.	30 railroads	200 tags	3 minutes	10
—Special requisites—movement—passenger equip.—saf. appl. defect.	30 railroads	76 tags	3 minutes	4
—Crew member notifications	30 railroads	38 radio notifications	30 seconds	.32
238.21—Petitions for special approval of alternative standards.	30 railroads	1 petition	16 hours	16
—Petitions for special approval of alternative compliance.	30 railroads	1 petition	120 hours	120
—Petitions for special approval of pre-revenue service acceptance testing plan.	30 railroads	10 petitions	40 hours	400
—Comments on petitions	Public/RR Industry	4 comments	1 hour	4
238.103—Fire Safety	2 new railroads	2 analyses	150 hours	300
—Procuring New Pass. Equipment—Fire Safety Analysis.	30 railroads	1 analysis	40 hours	40
—Existing Equipment—Final Fire Safety Analysis.	30 railroads/ APTA	3 analyses	20 hours	60
—Transferring existing equipment— Revised Fire Safety Analysis				
238.107—Inspection/testing/maintenance plans—Review by railroads.	30 railroads	30 reviews	60 hours	1,800
238.109—Employee/Contractor Tr	7,500 employees/	2,500 empl./	1.33 hours	3,458
—Training employees—Mech. Insp	100 trainers	100 trainers	3 minutes	125
—Recordkeeping—Employee/ Contractor Current Qualifications	30 railroads	2,500 record		
238.111—Pre-revenue service acceptance testing plan: Passenger equipment that has previously been used in service in the U.S..	9 equipment manufacturers.	2 plans	16 hours	32
		2 plans	192 hours	384
	9 equipment manufacturers.	2 plans	60 hours	120
		1 report	60 hours	60
—Passenger equipment that has not been previously used in revenue service in the U.S..	9 equipment manufacturers.	1 plan	20 hours	20
—Subsequent Equipment Orders	30 railroads			
—Tier II & Tier III Passenger Equipment: Report of Test Results to FRA (*revised requirement*).	30 railroads			
—Plan submitted to FRA for Tier II or Tier III equipment before being placed in service (*revised requirement*).				
238.201—*New Requirements*	30 railroads	1 plan	40 hours	40
Alternative Compliance: Tier I Passenger equipment—Test plans + supporting documentation demonstrating compliance.	30 railroads	1 notice	30 minutes	1
—Notice of Tests sent to FRA 30 days prior to commencement of operations.				
238.213—Corner Posts—Plan to meet section's corner post requirements for cab car or MU locomotives.	30 railroads	10 plans	40 hours	400
238.229—Safety Appliances	30 railroads	30 lists	1 hour	30
—Welded safety appliances considered defective: lists.	30 railroads	30 lists	1 hour	30
	30 railroads	4 tags	3 minutes	.20
—Lists Identifying Equip. w/Welded Saf. App.	30 railroads	2 notices	1 minute	.0333
	30 railroads	30 plans	16 hours	480
—Defective Welded Saf. Appliance—Tags	30 railroads	60 workers	4 hours	240
—Notification to Crewmembers about Non-Compliant Equipment.	30 railroads	1 record	2.25 hours	2
	30 railroads	15 petitions	4 hours	60
—Inspection plans	30 railroads	3,060 records	12 minutes	612
—Inspection Personnel—Training				
—Remedial action: Defect/crack in weld—record.				
—Petitions for special approval of alternative compliance—impractical equipment design.				
—Records of inspection/repair of welded safety appliance brackets/supports/Training.				

CFR section	Respondent universe	Total annual responses	Average time per response	Total annual burden hours
238.230—Safety Appliances—New Equipment—Inspection Record of Welded Equipment by Qualified Employee.	30 railroads	100 records	6 minutes	10
—Welded safety appliances: Documentation for equipment impractically designed to mechanically fasten safety appliance support.	30 railroads	15 document	4 hours	60
238.231—Brake System—Inspection and repair of hand/parking brake: Records.	30 railroads	2,500 forms	21 minutes	875
—Procedures Verifying Hold of Hand/Parking Brakes.	30 railroads	30 procedures	2 hours	60
238.237—Automated monitoring	30 railroads	3 documents	2 hours	6
—Documentation for alerter/deadman control timing.	30 railroads	25 tags	3 minutes	1
—Defective alerter/deadman control: Tagging.				
238.303—Exterior calendar day mechanical inspection of passenger equipment: Notice of previous inspection.	30 railroads	30 notices	1 minute	1
	30 railroads	50 tags	3 minutes	3
	30 railroads	50 tags	3 minutes	3
—Dynamic brakes not in operating mode: Tag.	30 railroads	4 documents	2 hours	8
	30 railroads	100 notices	3 minutes	5
—Conventional locomotives equipped with inoperative dynamic brakes: Tagging.	30 railroads	100 records	2 minutes	3
—MU passenger equipment found with inoperative/ineffective air compressors at exterior calendar day inspection: Documents.	30 railroads	1,959,620 records	10 minutes + 1 minute	359,264
—Written notice to train crew about inoperative/ineffective air compressors.				
—Records of inoperative air compressors				
—Record of exterior calendar day mechanical inspection.				
238.305—Interior calendar day mechanical inspection of passenger cars—Tagging of defective end/side doors.	30 railroads	540 tags	1 minute	9
—Records of interior calendar day inspection.	30 railroads	1,959,620 records	5 minutes + 1 minute	359,264
238.307—Periodic mechanical inspection of passenger cars and unpowered vehicles—Alternative inspection intervals: Notifications.	30 railroads	2 notices/notifications	5 hours	10
	30 railroads	200 notices	2 minutes	7
	30 railroads	19,284 records	200 hours/	3,857,443
—Notice of seats/seat attachments broken or loose.	30 railroads	5 documents	2 minutes 100 hours	500
—Records of each periodic mechanical inspection.				
—Detailed documentation of reliability assessments as basis for alternative inspection interval.				
238.311—Single car test	30 railroads	50 tags	3 minutes	3 hours
—Tagging to indicate need for single car test.				
238.313—Class I Brake Test	30 railroads	15,600 records	30 minutes	7,800
—Record for additional inspection for passenger equipment that does not comply with § 238.231(b)(1).				
238.315—Class IA brake test	30 railroads	18,250 notices	5 seconds	25
—Notice to train crew that test has been performed (verbal notice).	30 railroads	365,000 test	15 seconds	1,521
—Communicating Signal Tested and Operating.				
238.317—Class II brake test	30 railroads	365,000 test	15 seconds	1,521
—Communicating Signal Tested and Operating.				
238.321—Out-of-service credit—Passenger Car: Out-of-use notation.	30 railroads	1,250 notes	2 minutes	42
238.445—Automated Monitoring	1 railroad	10,000 alerts	10 seconds	28
—Performance monitoring: alerters/alarms	1 railroad	21,900 notices	20 seconds	122
—Monitoring system: Self-test feature: Notifications.				
238.503—Inspection, testing, and maintenance requirements—Plans.	1 railroad	1 plan	1,200 hours	1,200

CFR section	Respondent universe	Total annual responses	Average time per response	Total annual burden hours
238.505—Program approval procedures—Submission of program/plans and Comments on programs.	Rail Industry	3 comments	3 hours	9
238.703—Quasi-static Load Requirements—Document/analysis Tier III Trainsets showing compliance with this section (*new requirement*).	2 railroads	1 analysis	40 hours	40
238.705—Dynamic Collision Scenario—Demonstration of Occupied Volume Integrity Tier III Trainsets—Model Validation document (*new requirement*).	2 railroads	1 analysis	40 hours	40
238.707—Override Protection—Anti-climbing Performance Tests/.	2 railroads	1 analysis	40 hours	40
Analyses Tier III Trainsets—(*new requirement*).				
238.709—Fluid Entry Inhibition—Information to demonstrate compliance with this section Tier III Trainsets—(*new requirement*).	2 railroads	1 analysis	20 hours	20
238.721—*New Requirements*—Safe Operation Plans Tier III Trainsets—Addressing Glazing Safety and Other Subpart G Issues:—End-Facing Document/Analysis for Exterior Windows of Tier III Trainsets.	2 railroads	1 analysis	480 hours	480
	5 Glass Manufacturers	1 analysis	60 hours	60
	5 Glass Manufacturers	1 written notice	30 minutes	1
	5 Glass Manufacturers	1 recert.	1 second	0
	5 Glass Manufacturers	120 markings	2 minutes	6
—30-Day Advance Notice to FRA by glazing manufacturer inviting agency representatives to witness all tests Tier III Passenger Equipment.	5 Glass Manufacturers	1 analysis	10 hours	10
	5 Glass Manufacturers	240 markings	2 minutes	8
	5 Glass Manufacturers	1 analysis	20 hours	20
	5 Glass Manufacturers	1, 200 markings	2 minutes	40
—Glazing Material Recertification	2 railroads	1 alternative standard	5 hours	5
—Marking of End-facing exterior windows Tier III Trainsets.				
—Cab Glazing; Side Facing Exterior Window in Tier III Cab—document showing compliance Type II glaze.				
—Marking of Side-facing exterior windows Tier III Trainsets.				
—Non-Cab Glazing; Side Facing Exterior Window Tier III—compliance document Type II glaze.				
—Marking of Side-facing exterior windows Tier III Trainsets Non-cab cars.				
—Alternative standard to FRA for side-facing exterior window intended to be breakable and serve as an emergency window exit in accordance with railroad's Tier III Safe Operation Plan.				
238.731—*New Requirements*—Brake Systems—RR Analysis and testing Tier III trainsets maximum safe operating speed.	2 railroads	1 analysis/testing	480 hours	480
	2 railroads	40 stencils/markings	20 minutes	13
	2 railroads	1 ITM plan	480 hours	480
—Tier III trainsets passenger brake alarm—legible stenciling/marking of devices with words ''Passenger Brake Alarm''.				
—Inspection, testing and maintenance plan (ITM)—Periodic inspection for main reservoirs.				
238.741—*New Requirement* –Emergency window egress and rescue plan to FRA for passenger cars in Tier III trainsets not in compliance with sections 238.113 or 238.114.	2 railroads	1 plan	60 hours	60
238.743—*New Requirements*—Emergency Lighting—Tier III trainsets—Testing/Analysis.	2 railroads	1 analysis/testing	60 hours	60
238.751—*New Requirements*—Alerters—Tier III trainsets—Testing/Analysis.	2 railroads	1 analysis/testing	200 hours	200

All estimates include the time for reviewing instructions, searching existing data sources, gathering or maintaining the needed data, and reviewing the information. Under 44 U.S.C. 3506(c)(2)(B), FRA solicits comments concerning: (1) Whether these information collection requirements are necessary for the proper performance of the functions of FRA, including whether the information has practical utility; (2) the accuracy of FRA's estimates of the burden of the information collection requirements; (3) the quality, utility, and clarity of the

information to be collected; and (4) whether the burden of collection of information on those who are to respond, including through the use of automated collection techniques or other forms of information technology, may be minimized. For information or a copy of the paperwork package submitted to OMB, contact Mr. Robert Brogan, Information Clearance Officer, Federal Railroad Administration, at 202–493–6292, or Ms. Kimberly Toone, Records Management Officer, Federal Railroad Administration, at 202–493–6139.

Organizations and individuals desiring to submit comments on the collection of information requirements should direct them to Mr. Robert Brogan or Ms. Kimberly Toone, Federal Railroad Administration, 1200 New Jersey Avenue SE, 3rd Floor, Washington, DC 20590. Comments may also be submitted via email to Mr. Brogan at *Robert.Brogan@dot.gov*, or to Ms. Toone at *Kim.Toone@dot.gov*.

OMB is required to make a decision concerning the collection of information requirements contained in this proposed rule between 30 and 60 days after publication of this document in the **Federal Register**. Therefore, a comment to OMB is best assured of having its full effect if OMB receives it within 30 days of publication. The final rule will respond to any OMB or public comments on the information collection requirements contained in this proposal.

FRA is not authorized to impose a penalty on persons for violating information collection requirements which do not display a current OMB control number, if required. FRA intends to obtain current OMB control numbers for any new information collection requirements resulting from this rulemaking action prior to the effective date of the final rule. The OMB control number, when assigned, will be announced by separate notice in the **Federal Register**.

D. Federalism Implications

Executive Order 13132, ''Federalism'' (64 FR 43255, Aug. 10, 1999), requires FRA to develop an accountable process to ensure ''meaningful and timely input by State and local officials in the development of regulatory policies that have federalism implications.'' ''Policies that have federalism implications'' are defined in the Executive Order to include regulations that have ''substantial direct effects on the States, on the relationship between the national government and the States, or on the distribution of power and responsibilities among the various levels of government.'' Under Executive Order 13132, the agency may not issue a regulation with federalism implications that imposes substantial direct compliance costs and that is not required by statute, unless the Federal government provides the funds necessary to pay the direct compliance costs incurred by State and local governments, or the agency consults with State and local government officials early in the process of developing the regulation. Where a regulation has federalism implications and preempts State law, the agency seeks to consult with State and local officials in the process of developing the regulation.

This proposed rule has been analyzed under the principles and criteria contained in Executive Order 13132. This proposed rule will not have a substantial effect on the States or their political subdivisions, and it will not affect the relationships between the Federal government and the States or their political subdivisions, or the distribution of power and responsibilities among the various levels of government. In addition, FRA has determined that this regulatory action will not impose substantial direct compliance costs on the States or their political subdivisions. Therefore, the consultation and funding requirements of Executive Order 13132 do not apply.

However, the final rule arising from this rulemaking could have preemptive effect by operation of law under certain provisions of the Federal railroad safety statutes, specifically the former Federal Railroad Safety Act of 1970, repealed and recodified at 49 U.S.C. 20106, and the former Locomotive Boiler Inspection Act (LIA) at 45 U.S.C. 22–34, repealed and re-codified at 49 U.S.C. 20701–20703. Section 20106 provides that States may not adopt or continue in effect any law, regulation, or order related to railroad safety or security that covers the subject matter of a regulation prescribed or order issued by the Secretary of Transportation (with respect to railroad safety matters) or the Secretary of Homeland Security (with respect to railroad security matters), except when the State law, regulation, or order qualifies under the ''essentially local safety or security hazard'' exception to section 20106. Moreover, the former LIA has been interpreted by the Supreme Court as preempting the field concerning locomotive safety. See *Napier* v. *Atlantic Coast Line R.R.,* 272 U.S. 605 (1926).

E. International Trade Impact Assessment

The Trade Agreements Act of 1979 (Public Law 96–39, 19 U.S.C. 2501 *et seq.*) prohibits Federal agencies from engaging in any standards or related activities that create unnecessary obstacles to the foreign commerce of the United States. Legitimate domestic objectives, such as safety, are not considered unnecessary obstacles. The statute also requires consideration of international standards and, where appropriate, that they be the basis for U.S. standards.

FRA has assessed the potential effect of this rulemaking on foreign commerce and believes that its proposed requirements are consistent with the Trade Agreements Act. The proposed requirements are safety standards, which, as noted, are not considered unnecessary obstacles to trade. Moreover, FRA has sought, to the extent practicable, to state the proposed requirements in terms of the performance desired, rather than in more narrow terms restricted to a particular design or system.

F. Environmental Impact

FRA has evaluated this NPRM in accordance with the National Environmental Policy Act (NEPA; 42 U.S.C. 4321 *et seq.*), other environmental statutes, related regulatory requirements, and its ''Procedures for Considering Environmental Impacts'' (FRA's Procedures) (64 FR 28545, May 26, 1999). FRA has determined that this NPRM is categorically excluded from detailed environmental review pursuant to section 4(c)(20) of FRA's Procedures, which concerns the promulgation of railroad safety rules and policy statements that do not result in significantly increased emissions of air or water pollutants or noise or increased traffic congestion in any mode of transportation. See 64 FR 28547, May 26, 1999. Categorical exclusions (CEs) are actions identified in an agency's NEPA implementing procedures that do not normally have a significant impact on the environment and therefore do not require either an environmental assessment (EA) or environmental impact statement (EIS). See 40 CFR 1508.4.

In analyzing the applicability of a CE, the agency must also consider whether extraordinary circumstances are present that would warrant a more detailed environmental review through the preparation of an EA or EIS. Id. In accordance with section 4(c) and (e) of FRA's Procedures, the agency has further concluded that no extraordinary circumstances exist with respect to this proposed regulation that might trigger the need for a more detailed environmental review. The purpose of

this rulemaking is to propose amendments to FRA's Passenger Equipment Safety Standards. This proposed rulemaking would add safety standards to facilitate the safe implementation of high-speed rail at speeds up to 220 mph (Tier III). The proposal also would establish crashworthiness and occupant protection performance requirements in the alternative to those currently specified for passenger trainsets operated at speeds up to 125 mph (Tier I). In addition, the proposal would increase from 150 mph to 160 mph the maximum speed allowable for the tier of railroad passenger equipment currently operated at the Nation's highest train speeds (Tier II). FRA does not anticipate any environmental impacts from the proposed requirements and finds that there are no extraordinary circumstances present in connection with this NPRM.

G. Executive Order 12898 (Environmental Justice)

Executive Order 12898, Federal Actions to Address Environmental Justice in Minority Populations and Low-Income Populations, and DOT Order 5610.2(a) (91 FR 27534, May 10, 2012) require DOT agencies to achieve environmental justice as part of their mission by identifying and addressing, as appropriate, disproportionately high and adverse human health or environmental effects, including interrelated social and economic effects, of their programs, policies, and activities on minority populations and low-income populations. The DOT Order instructs DOT agencies to address compliance with Executive Order 12898 and requirements within the DOT Order in rulemaking activities, as appropriate. FRA has evaluated this proposed rule under Executive Order 12898 and the DOT Order and has determined that it would not cause disproportionately high and adverse human health and environmental effects on minority populations or low-income populations.

H. Executive Order 13175 (Tribal Consultation)

FRA has evaluated this proposed rule in accordance with the principles and criteria contained in Executive Order 13175, Consultation and Coordination with Indian Tribal Governments, dated November 6, 2000. The proposed rule would not have a substantial direct effect on one or more Indian tribes, would not impose substantial direct compliance costs on Indian tribal governments, and would not preempt tribal laws. Therefore, the funding and consultation requirements of Executive Order 13175 do not apply, and a tribal summary impact statement is not required.

I. Unfunded Mandates Reform Act of 1995

Under section 201 of the Unfunded Mandates Reform Act of 1995 (Pub. L. 104–4, 2 U.S.C. 1531), each Federal agency ''shall, unless otherwise prohibited by law, assess the effects of Federal regulatory actions on State, local, and tribal governments, and the private sector (other than to the extent that such regulations incorporate requirements specifically set forth in law).'' Section 202 of the Act (2 U.S.C. 1532) further requires that ''before promulgating any general notice of proposed rulemaking that is likely to result in the promulgation of any rule that includes any Federal mandate that may result in expenditure by State, local, and tribal governments, in the aggregate, or by the private sector, of $100,000,000 or more (adjusted annually for inflation) in any 1 year, and before promulgating any final rule for which a general notice of proposed rulemaking was published, the agency shall prepare a written statement'' detailing the effect on State, local, and tribal governments and the private sector. This proposed rule will not result in the expenditure, in the aggregate, of $100,000,000 or more (as adjusted annually for inflation) in any one year, and thus preparation of such a statement is not required.

J. Energy Impact

Executive Order 13211 requires Federal agencies to prepare a Statement of Energy Effects for any ''significant energy action.'' See 66 FR 28355, May 22, 2001. Under the Executive Order, a ''significant energy action'' is defined as any action by an agency (normally published in the **Federal Register**) that promulgates or is expected to lead to the promulgation of a final rule or regulation, including notices of inquiry, advance notices of proposed rulemaking, and notices of proposed rulemaking: (1)(i) That is a significant regulatory action under Executive Order 12866 or any successor order, and (ii) is likely to have a significant adverse effect on the supply, distribution, or use of energy; or (2) that is designated by the Administrator of the Office of Information and Regulatory Affairs as a significant energy action.

FRA has evaluated this proposed rule in accordance with Executive Order 13211. FRA has determined that this proposed rule is not likely to have a significant adverse effect on the supply, distribution, or use of energy. Consequently, FRA has determined that this regulatory action is not a ''significant energy action'' within the meaning of the Executive Order.

K. Privacy Act

In accordance with 5 U.S.C. 553(c), DOT solicits comments from the public to better inform its rulemaking process. DOT posts these comments, without edit, including any personal information the commenter provides, to *www.regulations.gov*, as described in the system of records notice (DOT/ALL–14 FDMS), which can be reviewed at *www.dot.gov/privacy*.

L. Analysis Under 1 CFR Part 51

As required by 1 CFR 51.5, FRA has summarized the standards it is proposing to incorporate by reference and shown the reasonable availability of those standards in the section-by-section analysis of this rulemaking document.

List of Subjects

49 CFR Part 236

Railroad safety.

49 CFR Part 238

Incorporation by reference, Passenger equipment, Railroad safety, Reporting and recordkeeping requirements.

The Proposed Rule

For the reasons discussed in the preamble, FRA proposes to amend parts 236 and 238 of chapter II, subtitle B of title 49, Code of Federal Regulations as follows:

PART 236—[AMENDED]

■ 1. The authority citation for part 236 continues to read as follows:

Authority: 49 U.S.C. 20102–20103, 20107, 20133, 20141, 20157, 20301–20303, 20306, 20701–20703, 21301–21302, 21304; 28 U.S.C. 2461, note; and 49 CFR 1.89.

Subpart I—Positive Train Control Systems

§ 236.1007 [Amended]

■ 2. In § 236.1007, remove paragraph (d), and redesignate paragraph (e) as paragraph (d).

PART 238—[AMENDED]

Subpart A—General

■ 3. The authority citation for part 238 continues to read as follows:

Authority: 49 U.S.C. 20103, 20107, 20133, 20141, 20302–20303, 20306, 20701–20702, 21301–21302, 21304; 28 U.S.C. 2461, note; and 49 CFR 1.89.

■ 4. Section 238.5 is amended by revising the definitions of ''glazing, end-

facing'', ''glazing, side-facing'', ''Tier II'', and ''Train, Tier II passenger'', and adding in alphabetical order definitions of ''Associate Administrator'', ''Cab'', ''Tier III'', ''Trainset, Tier I alternative passenger'', ''Trainset, Tier III'', and ''Trainset unit'' to read as follows:

§ 238.5 Definitions.

* * * * *

Associate Administrator means Associate Administrator for Railroad Safety and Chief Safety Officer, Associate Administrator for Railroad Safety, Associate Administrator for Safety.

* * * * *

Cab means, for the purposes of subpart H of this part, a compartment or space in a trainset designed to be occupied by the engineer and contain an operating console from which the engineer exercises control over the trainset. This term includes a locomotive cab.

* * * * *

Glazing, end-facing means any exterior glazing located where a line perpendicular to the plane of the glazing material makes a horizontal angle of 50 degrees or less with the centerline of the vehicle in which the glazing material is installed, except for: The coupled ends of multiple-unit (MU) locomotives or other equipment semi-permanently connected to each other in a train consist; and end doors of passenger cars at locations other than the cab end of a cab car or MU locomotive. Any location which, due to curvature of the glazing material, can meet the criteria for either an end-facing glazing location or a side-facing glazing location shall be considered an end-facing glazing location.

* * * * *

Glazing, side-facing means any glazing located where a line perpendicular to the plane of the glazing material makes a horizontal angle of more than 50 degrees with the centerline of the vehicle in which the glazing material is installed. Side-facing glazing also means glazing located at the coupled ends of MU locomotives or other equipment semi-permanently connected to each other in a train consist and glazing located at end doors other than at the cab end of a cab car or MU locomotive.

* * * * *

Tier II means operating at speeds exceeding 125 mph but not exceeding 160 mph.

Tier III means operating in a shared right-of-way at speeds not exceeding 125 mph and in an exclusive right-of-way without grade crossings at speeds exceeding 125 mph but not exceeding 220 mph.

* * * * *

Train, Tier II passenger means a short-distance or long-distance intercity passenger train providing service at speeds exceeding 125 mph but not exceeding 160 mph.

* * * * *

Trainset, Tier I alternative passenger means a trainset consisting of Tier I passenger equipment designed under the requirements of appendix G to this part.

Trainset, Tier III means an intercity passenger train that provides service in a shared right-of-way at speeds not exceeding 125 mph and in an exclusive right-of-way without grade crossings at speeds exceeding 125 mph but not exceeding 220 mph.

Trainset unit means a trainset segment located between connecting arrangements (articulations).

* * * * *

■ 5. In § 238.21 revise paragraphs (c)(2) and (d)(2) to read as follows:

§ 238.21 Special approval procedure.

* * * * *

(c) * * *

(2) The elements prescribed in §§ 238.201(b)(1), 238.229(j)(2), and 238.230(d); and

* * * * *

(d) * * *

(2) Each petition for special approval of the pre-revenue service acceptance testing plan shall be submitted to the Associate Administrator, Federal Railroad Administration, 1200 New Jersey Avenue SE., Mail Stop 25, Washington, DC 20590.

Subpart B—Safety Planning and General Requirements

■ 6. In § 238.111 revise paragraphs (b)(2), (4), (5), and (7), and (c) to read as follows:

§ 238.111 Pre-revenue service acceptance testing plan.

* * * * *

(b) * * *

(2) Submit a copy of the plan to FRA at least 30 days before testing the equipment and include with that submission notification of the times and places of the pre-revenue service tests to permit FRA observation of such tests. For Tier II and Tier III passenger equipment, the railroad shall obtain FRA approval of the plan under the procedures specified in § 238.21.

* * * * *

(4) Document in writing the results of the tests. For Tier II and Tier III passenger equipment, the railroad shall report the results of the tests to the Associate Administrator at least 90 days prior to its intended operation of the equipment in revenue service.

(5) Correct any safety deficiencies identified in the design of the equipment or in the ITM procedures uncovered during testing. If safety deficiencies cannot be corrected by design changes, the railroad shall impose operational limitations on the revenue service operation of the equipment designed to ensure the equipment can operate safely. For Tier II and Tier III passenger equipment, the railroad shall comply with any operational limitations the Associate Administrator imposes on the revenue service operation of the equipment for cause stated following FRA review of the results of the test program. This section does not restrict a railroad from petitioning FRA for a waiver of a safety regulation under the procedures specified in part 211 of this chapter.

* * * * *

(7) For Tier II or Tier III passenger equipment, obtain approval from the Associate Administrator before placing the equipment in revenue service. The Associate Administrator will grant such approval if the railroad demonstrates compliance with the applicable requirements of this part.

(c) If a railroad plans a major upgrade or introduction of new technology to Tier II or Tier III passenger equipment that has been used in revenue service in the United States and that affects a safety system on such equipment, the railroad shall follow the procedures in paragraph (b) of this section before placing the equipment in revenue service with the major upgrade or introduction of new technology.

* * * * *

Subpart C—Specific Requirements for Tier I Passenger Equipment

■ 7. In § 238.201, redesignate paragraph (b) as (b)(1), revise the first sentence of newly redesignated (b)(1), and add paragraph (b)(2) to read as follows:

§ 238.201 Scope/alternative compliance.

* * * * *

(b)(1) Passenger equipment of special design shall be deemed to comply with this subpart, other than § 238.203, for the service environment the petitioner proposes to operate the equipment in if the Associate Administrator determines under paragraph (c) of this section that the equipment provides at least an equivalent level of safety in such environment for the protection of its occupants from serious injury in the case of a derailment or collision. * * *

(2)(i) Tier I passenger trainsets may comply with the alternative crashworthiness and occupant protection requirements in appendix G to this part instead of the requirements in §§ 238.203, 238.205, 238.207, 238.209(a), 238.211, 238.213, and 238.219.

(ii) To assess compliance with the alternative requirements, the railroad shall submit the following documents to the Associate Administrator, for review:

(A) Test plans, and supporting documentation for all tests intended to demonstrate compliance with the alternative requirements and to validate any computer modeling and analysis used, including notice of such tests, 30 days before commencing the tests; and

(B) A carbody crashworthiness and occupant protection compliance report based on the analysis, calculations, and test data necessary to demonstrate compliance.

(iii) The carbody crashworthiness and occupant protection compliance report shall be deemed acceptable unless the Associate Administrator stays action by written notice to the railroad within 60 days after receipt of those submissions.

(A) If the Associate Administrator stays action, the railroad shall correct any deficiencies FRA identified and notify FRA it has corrected the deficiencies before placing the subject equipment into service.

(B) FRA may also impose written conditions necessary for safely operating the equipment, for cause stated.

* * * * *

■ 8. Revise § 238.203(a)(1) to read as follows:

§ 238.203 Static end strength.

(a)(1) Except as further specified in this paragraph, paragraph (d) of this section, and § 238.201(b)(2), on or after November 8, 1999, all passenger equipment shall resist a minimum static end load of 800,000 pounds applied on the line of draft without permanent deformation of the body structure.

* * * * *

■ 9. Revise the first sentence of § 238.205(a) to read as follows:

§ 238.205 Anti-climbing mechanism.

(a) Except as provided in paragraph (b) of this section, and § 238.201(b), all passenger equipment placed in service for the first time on or after September 8, 2000, and prior to March 9, 2010, shall have at both the forward and rear ends an anti-climbing mechanism capable of resisting an upward or downward vertical force of 100,000 pounds without failure. * * *

* * * * *

■ 10. Revise § 238.207 to read as follows:

§ 238.207 Link between coupling mechanism and carbody.

Except as specified in § 238.201(b), all passenger equipment placed in service for the first time on or after September 8, 2000, shall have a coupler carrier at each end designed to resist a vertical downward thrust from the coupler shank of 100,000 pounds for any normal horizontal position of the coupler, without permanent deformation. Passenger equipment connected by articulated joints that complies with the requirements of § 238.205(a) also complies with the requirements of this section.

■ 11. Amend § 238.209 by adding paragraph (a) introductory text to read as follows:

§ 238.209 Forward end structure of locomotives, including cab cars and MU locomotives.

(a) Except as specified in § 238.201(b)—

* * * * *

■ 12. Revise § 238.211(a) introductory text to read as follows:

§ 238.211 Collision posts.

(a) Except as further specified in this paragraph, paragraphs (b) through (d) of this section, § 238.201(b), and § 238.209(b)—

* * * * *

■ 13. Revise § 238.213(a)(1) to read as follows:

§ 238.213 Corner posts.

(a)(1) Except as further specified in paragraphs (b) and (c) of this section, § 238.201(b), and § 238.209(b), each passenger car shall have at each end of the car, placed ahead of the occupied volume, two full-height corner posts, each capable of resisting together with its supporting car body structure:

* * * * *

■ 14. Revise the first sentence of § 238.219 to read as follows:

§ 238.219 Truck-to-car-body attachment.

Except as provided in § 238.201(b), passenger equipment shall have a truck-to-carbody attachment with an ultimate strength sufficient to resist without failure the following individually applied loads: 2g vertically on the mass of the truck; and 250,000 pounds in any horizontal direction on the truck, along with the resulting vertical reaction to this load. * * *

Subpart E—Specific Requirements for Tier II Passenger Equipment

■ 15. Revise the first sentence of § 238.401 to read as follows:

§ 238.401 Scope.

This subpart contains specific requirements for railroad passenger equipment operating at speeds exceeding 125 mph but not exceeding 160 mph. * * *

Subpart F—Inspection, Testing, and Maintenance Requirements for Tier II Passenger Equipment

■ 16. Revise § 238.501 to read as follows:

§ 238.501 Scope.

This subpart contains inspection, testing, and maintenance requirements for railroad passenger equipment that operates at speeds exceeding 125 mph but not exceeding 160 mph.

■ 17. Add subpart H to part 238 to read as follows:

Subpart H—Specific Requirements for Tier III Passenger Equipment

Sec.
238.701 Scope.
Trainset Structure
238.703 Quasi-static compression load requirements.
238.705 Dynamic collision scenario.
238.707 Override protection.
238.709 Fluid entry inhibition.
238.711 End structure integrity of cab end.
238.713 End structure integrity of non-cab end.
238.715 Roof and side structure integrity.
238.717 Truck-to-carbody attachment.
Glazing
238.721 Glazing.
Brake System
238.731 Brake system.
Interior Fittings and Surfaces
238.733 Interior fixture attachment.
238.735 Seat crashworthiness (passenger and cab crew).
238.737 Luggage racks.
Emergency Systems
238.741 Emergency window egress and rescue access.
238.743 Emergency lighting.
Cab Equipment
238.751 Alerters.
238.753 Sanders.
Figure 1 to Subpart H of Part 238—Cylindrical Projectile for Use in § 238.721 End-Facing Cab-Glazing Testing

§ 238.701 Scope.

This subpart contains specific requirements for railroad passenger equipment operating in a shared right-of-way at speeds not exceeding 125 mph

and in an exclusive right-of-way without grade crossings at speeds exceeding 125 mph but not exceeding 220 mph. Passenger seating is permitted in the leading unit of a Tier III trainset, if safety issues associated with passengers occupying the leading unit are addressed and mitigated through a comprehensive Safe Operation Plan for Tier III Passenger Equipment. Demonstration of compliance with the requirements of this subpart is subject to FRA review and approval under § 238.111.

Trainset Structure

§ 238.703 Quasi-static compression load requirements.

(a) *General.* To demonstrate resistance to loss of occupied volume, Tier III trainsets shall comply with both the quasi-static compression load requirements in paragraph (b) of this section and the dynamic collision requirements in § 238.705.

(b) *Quasi-static compression load requirements.* (1) Each individual vehicle in a Tier III trainset shall resist a minimum quasi-static end load applied on the collision load path of:

(i) 800,000 pounds without permanent deformation of the occupied volume; or

(ii) 1,000,000 pounds without exceeding either of the following two conditions:

(A) Local plastic strains no greater than 5 percent; and

(B) Vehicle shortening no greater than 1 percent over any 15-foot length of the occupied volume; or

(iii) 1,200,000 pounds without crippling the body structure. Crippling of the body structure is defined as reaching the maximum point on the load-versus-displacement characteristic.

(2) To demonstrate compliance with this section, each type of vehicle shall be subjected to an end compression load (buff) test with an end load magnitude no less than 337,000 lbf (1500 kN).

(3) Compliance with the requirements of paragraph (b) of this section shall be documented and submitted to FRA for review and approval.

§ 238.705 Dynamic collision scenario.

(a) *General.* In addition to the requirements of § 238.703, occupied volume integrity (OVI) shall also be demonstrated for each individual vehicle in a Tier III trainset through an evaluation of a dynamic collision scenario in which a moving train impacts a standing train under the following conditions:

(1) The initially-moving train is made up of the equipment undergoing evaluation at its AW0 ready-to-run weight;

(2) If trains of varying consist lengths are intended for use in service, then the shortest and longest consist lengths shall be evaluated;

(3) If the initially-moving train is intended for use in push-pull service, then, as applicable, both the configurations as led by a locomotive and as led by a cab car shall be evaluated separately;

(4) The initially-standing train is led by a rigid (conventional) locomotive and also made up of five identical passenger coaches having the following characteristics:

(i) The locomotive weighs 260,000 pounds and each coach weighs 95,000 pounds;

(ii) The locomotive and each passenger coach crush in response to applied force as specified in Table 1 to this section; and

(iii) The locomotive shall be modeled using the data inputs listed in appendix H to this part so that it has a geometric design as depicted in Figure 1 to appendix H to this part;

(5) The scenario shall be evaluated on tangent, level track;

(6) The initially-moving train shall have an initial velocity of 20 mph if the consist is led by a cab car or MU locomotive, or an initial velocity of 25 mph if the consist is led by a conventional locomotive;

(7) The coupler knuckles on the colliding equipment shall be closed and centered;

(8) The initially-moving and initially-standing train consists are not braked;

(9) The initially-standing train has only one degree-of-freedom (longitudinal displacement); and

(10) The model used to demonstrate compliance with the dynamic collision requirements must be validated. Model validation shall be documented and submitted to FRA for review and approval.

(b) *Dynamic collision requirements.* As a result of the impact described in paragraph (a) of this section—

(1) One of the following two conditions must be met for the occupied volume of the initially-moving train:

(i) There shall be no more than 10 inches of longitudinal permanent deformation; or

(ii) Global vehicle shortening shall not exceed 1 percent over any 15-foot length of occupied volume.

(2) If Railway Group Standard GM/RT2100, Issue Four, ''Requirements for Rail Vehicle Structures,'' Rail Safety and Standards Board Ltd., December 2010, is used to demonstrate compliance with any of the requirements in §§ 238.733, 238.735, 238.737, or 238.743, then the average longitudinal deceleration of the center of gravity (CG) of each vehicle in the initially-moving train during the dynamic collision scenario shall not exceed 5g during any 100-millisecond (ms) time period.

(3) Compliance with each of the following conditions shall also be demonstrated for the cab of the initially-moving train after the impact:

(i) For each seat provided for an employee in the cab, and any floor-mounted seat in the cab, a survival space shall be maintained where there is no intrusion for a minimum of 12 inches from each edge of the seat. Walls or other items originally within this defined space, not including the operating console, shall not further intrude more than 1.5 inches towards the seat under evaluation;

(ii) There shall be a clear exit path for the occupants of the cab;

(iii) The vertical height of the cab (floor to ceiling) shall not be reduced by more than 20 percent; and

(iv) The operating console shall not have moved closer to the engineer's seat by more than 2 inches; if the engineer's seat is part of a set of adjacent seats, the requirements of this paragraph apply to both seats.

TABLE 1—FORCE-VERSUS-CRUSH RELATIONSHIPS FOR PASSENGER COACH AND CONVENTIONAL LOCOMOTIVE

Vehicle	Crush (in)	Force (lbf)
Passenger Coach	0	0
	3	80,000
	6	2,500,000
Conventional Locomotive	0	0
	2.5	100,000
	5	2,500,000

§ 238.707 Override protection.

(a) *Colliding equipment.* (1) Using the dynamic collision scenario described in § 238.705(a), anti-climbing performance shall be evaluated for each of the following sets of initial conditions:

(i) All vehicles in the initially-moving and initially-standing train consists are positioned at their nominal running heights; and

(ii) The lead vehicle of the initially-moving train shall be perturbed laterally and vertically by 3 inches at the colliding interface.

(2) For each set of initial conditions specified in paragraph (a)(1) of this section, compliance with the following conditions shall be demonstrated after a dynamic impact:

(i) The relative difference in elevation between the underframes of the colliding equipment in the initially-moving and initially-standing train consists shall not change by more than 4 inches; and

(ii) The tread of any wheel of the first vehicle of the initially-moving train shall not rise above the top of the rail by more than 4 inches

(b) *Connected equipment override.* (1) Using the dynamic collision scenario described in § 238.705(a), anti-climbing performance shall be evaluated for each of the following sets of initial conditions:

(i) All vehicles in the initially-moving and initially-standing train consists are positioned at their nominal running heights; and

(ii) One vehicle is perturbed laterally and vertically by 2 inches, relative to the adjacent vehicle, at the first vehicle-to-vehicle interface in the initially-moving train.

(2) For each set of initial conditions specified in paragraph (b)(1) of this section, compliance with the following conditions shall be demonstrated after a dynamic impact:

(i) The relative difference in elevation between the underframes of the connected equipment in the initially-moving train shall not change by more than 4 inches; and

(ii) The tread of any wheel of the initially-moving train shall not rise above the top of rail by more than 4 inches.

§ 238.709 Fluid entry inhibition.

(a) The skin covering the forward-facing end of a Tier III trainset shall be—

(1) Equivalent to a ½-inch steel plate with yield strength of 25,000 pounds per square inch. Material of higher yield strength may be used to decrease the required thickness of the material provided at least an equivalent level of strength is maintained. The sum of the thicknesses of elements (*e.g.,* skin and structural elements) from the structural leading edge of the trainset to a point, when projected onto a vertical plane, just forward of the engineer's normal operating position, may also be used to satisfy this requirement;

(2) Designed to inhibit the entry of fluids into the cab; and

(3) Affixed to the collision posts or other main structural members of the forward end structure so as to add to the strength of the end structure.

(b) Information used to demonstrate compliance with the requirements of this section shall at a minimum include a list and drawings of the structural elements considered in satisfying the requirement of this section, and calculations showing that the thickness-strength requirement is satisfied.

§ 238.711 End structure integrity of cab end.

The cab ends of Tier III trainsets shall comply with the requirements of appendix F to this part to demonstrate the integrity of the end structure. For those units of Tier III trainsets without identifiable corner or collision posts, the requirements of appendix F apply to the end structure at each location specified, regardless of whether the structure is a post.

§ 238.713 End structure integrity of non-cab end.

(a) *General.* Tier III trainsets shall comply with the requirements in paragraphs (b) and (c) of this section to demonstrate the integrity of the end structure for other than the cab ends.

(b) *Collision post requirements.* (1) Each unit of a Tier III trainset shall have at each non-cab end of the unit either:

(i) Two full-height collision posts, located at approximately the one-third points laterally. Each collision post shall have an ultimate longitudinal shear strength of not less than 300,000 pounds at a point even with the top of the underframe member to which it is attached. If reinforcement is used to provide the shear value, the reinforcement shall have full value for a distance of 18 inches up from the underframe connection and then taper to a point approximately 30 inches above the underframe connection; or

(ii) An equivalent end structure that can withstand the sum of forces that each collision post in paragraph (b)(1)(i) of this section is required to withstand. For analysis purposes, the required forces may be assumed to be evenly distributed at the locations where the equivalent structure attaches to the underframe.

(2) Collision posts are not required for the non-cab ends of any unit with push-back couplers and interlocking anti-climbing mechanisms in a Tier III trainset, or the non-cab ends of a semi-permanently coupled consist of trainset units, if the inter-car connection is capable of preventing disengagement and telescoping to the same extent as equipment satisfying the anti-climbing and collision post requirements in subpart C of this part. For demonstrating that the inter-car connection is capable of preventing such disengagement (and telescoping), the criteria in § 238.707(b) apply.

(c) *Corner post requirements.* (1) Each passenger car in a Tier III trainset shall have at each non-cab end of the car, placed ahead of the occupied volume, two side structures capable of resisting a:

(i) 150,000-pound horizontal force applied at floor height without failure;

(ii) 20,000-pound horizontal force applied at roof height without failure; and

(iii) 30,000-pound horizontal force applied at a point 18 inches above the top of the floor without permanent deformation.

(2) For purposes of this paragraph, the orientation of the applied horizontal forces shall range from longitudinal inward to transverse inward.

(3) For each evaluation load, the load shall be applied to an area of the structure sufficient to not locally cripple or punch through the material.

(4) The load area shall be chosen to be appropriate for the particular car design and shall not exceed 10 inches by 10 inches.

§ 238.715 Roof and side structure integrity.

To demonstrate roof and side structure integrity, Tier III trainsets shall comply with the requirements in §§ 238.215 and 238.217.

§ 238.717 Truck-to-carbody attachment.

To demonstrate the integrity of truck-to-carbody attachments, each unit in a Tier III trainset shall:

(a) Comply with the requirements of § 238.219; or

(b) Have a truck-to-carbody attachment with strength sufficient to resist, without yielding, the following individually applied, quasi-static loads on the mass of the truck at its CG:

(1) 3g vertically downward;

(2) 1g laterally, along with the resulting vertical reaction to this load; and

(3) Except as provided in paragraph (c) of this section, 5g longitudinally, along with the resulting vertical reaction to this load, provided that for the conditions in the dynamic collision scenario described in § 238.705(a):

(i) The average longitudinal deceleration at the CG of the equipment during the impact does not exceed 5g; and

(ii) The peak longitudinal deceleration of the truck during the impact does not exceed 10g.

(c) As an alternative to demonstrating compliance with paragraph (b)(3) of this section, the truck shall be shown to remain attached after a dynamic impact under the conditions in the collision scenario described in § 238.705(a).

(d) For purposes of paragraph (b) of this section, the mass of the truck includes axles, wheels, bearings, truck-

mounted brake system, suspension system components, and any other component attached to the truck by design.

(e) Truck attachment shall be demonstrated using a validated model.

Glazing

§ 238.721 Glazing.

(a) *General.* Glazing safety issues associated with operating in a Tier III environment shall be identified and addressed through a comprehensive analysis in the railroad's Safe Operation Plan for Tier III Passenger Equipment that considers right-of-way access control, intrusion detection, and safety devices to contain thrown or dropped objects.

(b) *Cab glazing; end-facing.* (1) Each end-facing exterior window in a cab of a Tier III trainset shall comply with the requirements for Type I glazing in appendix A to part 223 of this chapter, except as provided in paragraphs (b)(2) through (4) of this section.

(2) Instead of the large object impact test specified in appendix A to part 223, each end-facing exterior window in a cab shall demonstrate compliance with the following requirements of this paragraph:

(i) The glazing article shall be impacted with a cylindrical projectile that complies with the following design specifications as depicted in Figure 1 to this subpart:

(A) The projectile shall be constructed of aluminum alloy such as ISO 6362–2:1990, grade 2017A, or its demonstrated equivalent;

(B) The projectile end cap shall be made of steel;

(C) The projectile assembly shall weigh 2.2 lbs (−0, +0.044 lbs) or 1 kilogram (kg) (−0, +0.020 kg) and shall have a hemispherical tip. Material may be removed from the interior of the aluminum portion to adjust the projectile mass according to the prescribed tolerance. The hemispherical tip shall have a milled surface with 0.04 inch (1 mm) grooves; and

(D) The projectile shall have an overall diameter of 3.7 inches (94 mm) with a nominal internal diameter of 2.76 inches (70 mm).

(ii) The test of the glazing article shall be deemed satisfactory if the test projectile does not penetrate the windscreen, the windscreen remains in its frame, and the witness plate is not marked by spall.

(iii) A new projectile shall be used for each test.

(iv) The glazing article to be tested shall be that which has the smallest area for each design type. For the test, the glazing article shall be fixed in a frame of the same construction as that mounted on the vehicle.

(v) A minimum of four tests shall be conducted and all must be deemed satisfactory. Two tests shall be conducted with the complete glazing article at 32 °F; ±9 °F (0 °C ± 5 °C) and two tests shall be conducted with the complete glazing article at 68 °F ± 9 °F (20 °C ± 5 °C). For the tests to be valid they shall demonstrate that the core temperature of the complete glazing article during each test is within the required temperature range.

(vi) The test glazing article shall be mounted at the same angle relative to the projectile path as it will be to the direction of travel when mounted on the vehicle.

(vii) The projectile's impact velocity shall equal the maximum operating speed of the Tier III trainset plus 100 mph (160 km/h). The projectile velocity shall be measured within 13 feet (4 m) of the point of impact.

(viii) The point of impact shall be at the geometrical center of the glazing article.

(3) Representative samples for large object impact testing of large Tier III end-facing cab glazing articles may be used instead of the actual design size provided that the following conditions are met:

(i) Testing of glazing articles having dimensions greater than 39.4 by 27.6 inches (1,000 mm by 700 mm), excluding framing, may be performed using a flat sample having the same composition as the glazing article for which compliance is to be demonstrated. The glazing manufacturer shall provide documentation containing its technical justification that testing a flat sample is sufficient to verify compliance of the glazing article with the requirements of this paragraph.

(ii) Flat sample testing is permitted only when no surface of the full size glazing article contains curvature with a radius less than 98 inches (2,500 mm), and when a complete, finished glazing article is laid (convex side uppermost) on a flat horizontal surface, the distance, (measured perpendicularly to the flat surface) between the flat surface and the inside face of the glazing article is not greater than 8 inches (200 mm).

(4) End-facing glazing shall demonstrate sufficient resistance to spalling, as verified by the large impact projectile test under the following conditions:

(i) An annealed aluminum witness plate of maximum thickness 0.006 inches (0.15 mm) and of dimension 19.7 by 19.7 inches (500 mm by 500 mm) is placed vertically behind the sample under test, at a horizontal distance of 500 mm from the point of impact in the direction of travel of the projectile or the distance between the point of impact of the projectile and the location of the engineer's eyes in the engineer's normal operating position, whichever is less. The center of the witness plate is aligned with the point of impact.

(ii) Spalling performance shall be deemed satisfactory if the aluminum witness plate is not marked.

(iii) For the purposes of this part, materials used specifically to protect the cab occupants from spall (*i.e.,* spall shields) shall not be required to meet the flammability and smoke emission performance requirements of appendix B to this part.

(5) Each end-facing exterior window in a cab shall provide ballistic penetration resistance sufficient to protect cab occupants from risks and hazards identified by the railroad as part of its Safe Operation Plan for Tier III Equipment. This protection shall, at a minimum, meet the requirements of part 223, appendix A.

(6) Tests performed on glazing materials for demonstration of compliance with this section shall be certified by either:

(i) An independent third-party (laboratory, facility, underwriter); or

(ii) The glazing manufacturer, by providing FRA the opportunity to witness all tests by written notice at least 30 days prior to testing.

(7) Any glazing material certified to meet the requirements of this section shall be re-certified by the same means (as originally certified) if any changes are made to the glazing that may affect its mechanical properties or its mounting arrangement on the vehicle.

(8) All certification/re-certification documentation shall be made available to FRA upon request.

(9) Each end-facing exterior window in a cab shall be permanently marked, before installation, in such a manner that the marking is clearly visible after the material has been installed. The marking shall include:

(i) The words ''FRA TYPE IHS'' to indicate that the material has successfully passed the testing requirements specified in this paragraph (b);

(ii) The name of the manufacturer; and

(iii) The type or brand identification of the material.

(c) *Cab glazing; side-facing.* Each side-facing exterior window in a cab of a Tier III trainset shall—

(1) Comply with the requirements for Type II glazing contained in appendix A

to part 223 of this chapter, for large-object impact; and

(2) Maintain the minimum ballistics penetration resistance as required for end-facing glazing in paragraph (b)(5) of this section.

(d) *Non-cab glazing; side-facing.*

(1) Except as provided in paragraph (d)(2) of this section, each side-facing exterior window in other than a cab shall comply with the requirements for Type II glazing contained in appendix A to part 223 of this chapter.

(2) Instead of the requirements specified in paragraph (d)(1) of this section, a side-facing exterior window intended to be breakable and serve as an emergency window exit under the railroad's Tier III Safe Operation Plan may comply with an alternative standard that provides an equivalent level of safety and is approved for use by FRA.

(e) *Glazing securement.* Each exterior window shall remain in place when subjected to:

(1) The forces due to air pressure differences caused when two trains pass at the minimum separation for two adjacent tracks, while traveling in opposite directions, each train traveling at the maximum authorized speed; and

(2) The impact forces that the exterior window is required to resist as specified in this section.

Brake System

§ 238.731 Brake system.

(a) *General.* Each railroad shall demonstrate through analysis and testing the maximum safe operating speed for its Tier III trainsets that results in no thermal damage to equipment or infrastructure during normal operation of the brake system.

(b) *Minimum performance requirement for brake system.* Each Tier III trainset's brake system shall be capable of stopping the trainset from its maximum operating speed within the signal spacing existing on the track over which the trainset is operating under the worst-case adhesion conditions defined in the railroad's Safe Operation Plan for Tier III Passenger Equipment.

(c) *Emergency brake system.* A Tier III trainset shall be provided with an emergency brake application feature that produces an irretrievable stop. An emergency brake application shall be available at any time, and shall be initiated by either of the following:

(1) An unintentional parting of the trainset; or

(2) The train crew at locations specified in the railroad's Safe Operation Plan for Tier III Passenger Equipment.

(d) *Passenger brake alarm.* (1) A means to initiate a passenger brake alarm shall be provided at two locations in each unit of a Tier III trainset that is over 45 feet in length. When a unit of the trainset is 45 feet or less in length, a means to initiate a passenger brake alarm need only be provided at one location in the unit. These locations shall be identified in the railroad's Safe Operation Plan for Tier III Passenger Equipment. The words ''Passenger Brake Alarm'' shall be legibly stenciled or marked on each device or on an adjacent badge plate.

(2) All passenger brake alarms shall be installed so as to prevent accidental activation.

(3) During departure from the boarding platform, activation of the passenger brake alarm shall result in an emergency brake application.

(4) A passenger brake alarm activation that occurs after the trainset has safely cleared the boarding platform shall be acknowledged by the engineer within the time period specified in the railroad's Safe Operation Plan for Tier III Passenger Equipment for train operation to remain under the full control of the engineer. The method used to confirm that the trainset has safely cleared the boarding platform shall be defined in the railroad's Safe Operation Plan for Tier III Passenger Equipment.

(5) If the engineer does not acknowledge the passenger brake alarm as specified in paragraph (d)(4) of this section, at a minimum, a retrievable full service brake application shall be automatically initiated until the trainset has stopped unless the engineer intervenes as described in paragraph (d)(6) of this section.

(6) To retrieve the full service brake application described in paragraph (d)(5) of this section, the engineer must acknowledge the passenger brake alarm and activate appropriate controls to issue a command for brake application as specified in the railroad's Safe Operation Plan for Tier III Passenger Equipment.

(e) *Degraded performance of blended brake system.* The following requirements of this paragraph (e) apply to operation of Tier III trainsets with blended braking systems to address degraded brake system performance:

(1) Loss of power or failure of the dynamic or regenerative brake shall not result in exceeding the allowable stopping distance defined in the railroad's Safe Operation Plan for Tier III Passenger Equipment;

(2) The available friction braking shall be adequate to stop the trainset safely under the operating conditions defined in the railroad's Safe Operation Plan for Tier III Passenger Equipment;

(3) The operational status of the trainset brake system shall be displayed for the engineer in the operating cab; and

(4) The railroad shall demonstrate through analysis and testing the maximum speed for safely operating its Tier III trainsets using only the friction brake portion of the blended brake with no thermal damage to equipment or infrastructure.

(f) *Main reservoir system.* (1) The main reservoirs in a Tier III trainset shall be designed and tested to meet the requirements of a recognized standard specified in the railroad's Safe Operation Plan for Tier III Passenger Equipment, such as the American Society of Mechanical Engineers (ASME) Boiler and Pressure Vessel Code for Unfired Pressure Vessel Section VIII, Division I (ASME Code). The working pressure shall be 150 psig (10.3 bar) and the corresponding rated temperature shall be 150 °F (65 °C) unless otherwise defined in the railroad's Safe Operation Plan for Tier III Passenger Equipment. Reservoirs shall be certified based on their size and volume requirements.

(2) Each welded steel main reservoir shall be drilled in accordance with the requirements of a recognized standard specified in the railroad's Safe Operation Plan for Tier III Passenger Equipment, such as paragraph UG–25(e) of Section VIII of the ASME Boiler and Pressure Vessel Code. With the drain opening located at the low point of the reservoir, one row of holes shall be drilled lengthwise on the reservoir on a line intersecting the drain opening and sloped to the drain opening.

(3) A breach of a welded steel main reservoir at any of the drilled holes described in paragraph (f)(2) of this section shall be cause for the reservoir to be condemned and withdrawn from service. Any type of welded repair to a steel main reservoir is prohibited.

(g) *Aluminum main reservoirs.* (1) Aluminum main reservoirs used in a Tier III trainset shall conform to the requirements of § 229.51 of this chapter.

(2) Any type of welded repair to an aluminum main reservoir is prohibited.

(h) *Main reservoir tests.* Prior to initial installation, each main reservoir shall be subjected to a pneumatic or hydrostatic pressure test based on the maximum working pressure defined in paragraph (f) or (g) of this section, as appropriate, unless otherwise established by the railroad's inspection, testing, and maintenance (ITM) plan. Records of the test date, location, and pressure shall be maintained by the railroad for the life of the equipment. Periodic inspection

requirements for main reservoirs shall be defined in the railroad's ITM plan.

(i) *Brake gauges.* All mechanical gauges and all devices providing electronic indication of air pressure that are used by the engineer to aid in the control or braking of a Tier III trainset shall be located so they may be conveniently read from the engineer's normal position during operation of the trainset.

(j) *Brake application/release.* (1) Brake actuators shall be designed to provide brake pad and shoe clearance when the brakes are released.

(2) The minimum brake cylinder pressure shall be established to provide adequate adjustment from minimum service to full service for proper train operation. The brake cylinder pressure shall be approved as part of the design review process described in the railroad's Safe Operation Plan for Tier III Passenger Equipment.

(k) *Foundation brake gear.* The railroad shall specify requirements in its ITM plan for the inspection, testing, and maintenance of the foundation brake gear.

(l) *Leakage.* (1) If a Tier III trainset is equipped with a brake pipe, the leakage rates shall not exceed the limits defined in either paragraph (l)(2) of this section, or those defined in the Air Consumption Analysis included in the railroad's Safe Operation Plan for Tier III Passenger Equipment, whichever is more restrictive. The method of inspection for main reservoir pipe leakage shall be prescribed in the railroad's ITM plan.

(2) Brake pipe leakage may not exceed 5 p.s.i. per minute; and with a full service application at maximum brake pipe pressure and with communication to the brake cylinders closed, the brakes shall remain applied for at least 5 minutes.

(m) *Slide protection and alarm.* (1) A Tier III trainset shall be equipped with an adhesion control system designed to automatically adjust the braking force on each wheel to prevent sliding during braking.

(2) A wheel-slide alarm that is visual or audible, or both, shall alert the engineer in the operating cab to wheel-slide conditions on any axle of the trainset.

(3) If this system fails to prevent wheel slide within preset parameters specified in the railroad's Safe Operation Plan for Tier III Passenger Equipment, then operating restrictions for a trainset with slide protection devices that are not functioning as intended shall be specified in the railroad's Safe Operation Plan for Tier III Passenger Equipment.

(n) *Monitoring and diagnostics.* Each Tier III trainset shall be equipped with a monitoring and diagnostic system that is designed to automatically assess the functionality of the brake system for the entire trainset. Details of the system operation and the method of communication of brake system functionality prior to the departure of the trainset and while en route shall be described in detail in the railroad's Safe Operation Plan for Tier III Passenger Equipment.

(o) *Train securement.* Independent of the pneumatic brakes, Tier III equipment shall be equipped with a means of securing the equipment against unintentional movement when unattended (as defined in § 238.231(h)(4)). The railroad shall specify in its Safe Operation Plan for Tier III Passenger Equipment the procedures used to secure the equipment and shall also demonstrate that those procedures effectively secure the equipment on all grade conditions identified by the railroad.

(p) *Rescue operation; brake system.* A Tier III trainset's brake system shall be designed to allow a rescue vehicle or trainset to control its brakes when the trainset is disabled.

Interior Fittings and Surfaces

§ 238.733 Interior fixture attachment.

(a) Tier III trainsets shall comply with the interior fixture attachment requirements referenced in either of the following paragraphs:

(1) Section 238.233 and APTA PR–CS–S–006–98.

(2) Section 6.1.4, ''Security of furniture, equipment and features,'' of GM/RT2100, provided that—

(i) The conditions of § 238.705(b)(2) are met;

(ii) Interior fixture attachment strength is based on a minimum of 5g longitudinal, 3g lateral, and 3g vertical acceleration resistance; and

(iii) Use of the standard is carried out in accordance with any conditions identified in the railroad's Safe Operation Plan for Tier III Passenger Equipment, as approved by FRA.

(b) The standards required in this section are incorporated by reference into this section with the approval of the Director of the Federal Register under 5 U.S.C. 552(a) and 1 CFR part 51. All approved material is available for inspection at Federal Railroad Administration, Docket Clerk, 1200 New Jersey Avenue SE., Washington, DC and is available from the sources indicated below. It is also available for inspection at the National Archives and Records Administration (NARA). For information on the availability of this material at NARA, call 202–741–6030 or go to *http://www.archives.gov/federal_register/code_of_federal_regulations/ibr_locations.html.*

(1) American Public Transportation Association, 1666 K Street NW., Washington, DC 20006, *www.aptastandards.com.*

(i) APTA PR–CS–S–006–98 Rev. 1, ''Standard for Attachment Strength of Interior Fittings for Passenger Railroad Equipment,'' Authorized September 2005.

(ii) [Reserved.]

(2) Communications, RSSB, Block 2 Angel Square, 1 Torrens Street, London, England EC1V 1NY, *www.rgsonline.co.uk.*

(i) Railway Group Standard GM/RT2100, Issue Four, ''Requirements for Rail Vehicle Structures,'' Rail Safety and Standards Board Ltd., December 2010.

(ii) [Reserved.]

§ 238.735 Seat crashworthiness (passenger and cab crew).

(a) Passenger seating in Tier III trainsets shall comply with the requirements referenced in either of the following paragraphs:

(1) Section 238.233 and APTA PR–CS–S–016–99 excluding Section 6.0, ''Seat durability testing;'' or

(2) Section 6.2, ''Seats for passengers, personnel, or train crew,'' of Railway Group Standard GM/RT2100, provided that—

(i) The conditions of 238.705(b)(2) are met;

(ii) Seat attachment strength is based on a minimum of 5g longitudinal, 3g lateral, and 3g vertical acceleration resistance; and

(iii) Use of the standard is carried out under any conditions identified in the railroad's Safe Operation Plan for Tier III Passenger Equipment, as approved by FRA.

(b) Each seat provided for an employee in the cab of a Tier III trainset, and any floor-mounted seat in the cab, shall comply with the requirements in both of the following paragraphs:

(1) Sections 238.233 (e), (f), and (g), including the loading requirements of 8g longitudinally, 4g laterally, and 4g vertically; and

(2) The performance, design, and test criteria of AAR–RP–5104.

(c) The standards required in this section are incorporated by reference into this section with the approval of the Director of the Federal Register under 5 U.S.C. 552(a) and 1 CFR part 51. All approved material is available for inspection at Federal Railroad Administration, Docket Clerk, 1200 New Jersey Avenue SE., Washington, DC and

are available from the sources indicated below. They are also available for inspection at NARA. For information on the availability of this material at NARA, call 202–741–6030 or go to *http://www.archives.gov/federal_register/code_of_federal_regulations/ibr_locations.html.*

(1) American Public Transportation Association, 1666 K Street NW., Washington, DC 20006, *www.aptastandards.com.*

(i) APTA PR–CS–S–016–99, Rev. 2, ''Standard for Passenger Seats in Passenger Rail Cars,'' Authorized October 2010.

(ii) [Reserved.]

(2) Communications, RSSB, Block 2 Angel Square, 1 Torrens Street, London, England EC1V 1NY, *www.rgsonline.co.uk.*

(i) Railway Group Standard GM/RT2100, Issue Four, ''Requirements for Rail Vehicle Structures,'' Rail Safety and Standards Board Ltd., December 2010.

(ii) [Reserved.]

(3) AAR–RP–5104, ''Locomotive Cab Seats,'' April 2008.

(i) Association of American Railroads, 425 3rd Street SW., Washington, DC 20024, *aarpublications.com.*

(ii) [Reserved.]

§ 238.737 Luggage racks.

(a) Overhead storage racks shall provide longitudinal and lateral restraint for stowed articles. These racks shall incorporate transverse dividers at a maximum spacing of 10 ft. (3 m) to restrain the longitudinal movement of luggage. To restrain the lateral movement of luggage, these racks shall also slope downward in the outboard direction at a minimum ratio of 1:8 with respect to a horizontal plane.

(b) Luggage racks shall comply with the requirements in either of the following paragraphs:

(1) Section 238.233; or

(2) Section 6.8, ''Luggage stowage,'' of Railway Group Standard GM/RT2100, provided that—

(i) The conditions of 238.705(b)(2) are met;

(ii) Attachment strength is based on a minimum of 5g longitudinal, 3g lateral, and 3g vertical acceleration resistance; and

(iii) Use of the standard is carried out under any conditions identified in the railroad's Safe Operation Plan for Tier III Passenger Equipment, as approved by FRA. In particular, the railroad shall determine the maximum allowable weight of the luggage stowed for purposes of evaluating luggage rack attachment strength.

(c) Railway Group Standard GM/RT2100, Issue Four, ''Requirements for Rail Vehicle Structures,'' Rail Safety and Standards Board Ltd., December 2010 is incorporated by reference into this section with the approval of the Director of the Federal Register under 5 U.S.C. 552(a) and 1 CFR part 51. All approved material is available for inspection at Federal Railroad Administration, Docket Clerk, 1200 New Jersey Avenue SE., Washington, DC and is available from Communications, RSSB, Block 2 Angel Square, 1 Torrens Street, London, England EC1V 1NY, *www.rgsonline.co.uk.* It is also available for inspection at NARA. For information on the availability of this material at NARA, call 202–741–6030 or go to *http://www.archives.gov/federal_register/code_of_federal_regulations/ibr_locations.html*

Emergency Systems

§ 238.741 Emergency window egress and rescue access.

(a) *Emergency window egress and rescue access plan.* If a passenger car in a Tier III trainset is not designed to comply with the requirements in §§ 238.113 or 238.114, the railroad shall submit to FRA for approval an emergency window egress and rescue access plan during the design review stage. The plan must include, but is not limited to, the elements in this section.

(b) *Ease of operability.* If an emergency window exit in a passenger car requires the use of a tool, other implement (*e.g.,* hammer), or a mechanism to permit removal of the window panel from the inside of the car during an emergency situation, then the plan must demonstrate the use of the device provides a level of safety equivalent to that provided by § 238.113(b). In particular, the plan must address the location, design, and signage and instructions for the device. The railroad shall also include a provision in its Tier III ITM plan to inspect for the presence of the device at least each day the car is in service.

(c) *Dimensions.* If the dimensions of a window opening in a passenger car do not comply with the requirements in §§ 238.113 or 238.114, then the plan must demonstrate that at least an equivalent level of safety is provided.

(d) *Alternative emergency evacuation openings.* If a passenger car employs the use of emergency egress panels or additional door exits instead of emergency window exits or rescue access windows, then the plan must demonstrate that such alternative emergency evacuation openings provide a level of safety at least equivalent to that required by § 238.113 or § 238.114, or both. The plan must address the location, design, and signage and instructions for the alternative emergency evacuation openings.

§ 238.743 Emergency lighting.

(a) Except as provided in paragraph (b) of this section, Tier III trainsets shall comply with the emergency lighting requirements specified in § 238.115.

(b) Emergency lighting back-up power systems shall, at a minimum, be capable of operating after experiencing the individually applied accelerations defined in either of the following paragraphs:

(1) § 238.115(b)(4)(ii); or

(2) Section 6.1.4, ''Security of furniture, equipment and features,'' of Railway Group Standard GM/RT2100, provided that—

(i) The conditions of § 238.705(b)(2) are met;

(ii) Attachment strength is based on a minimum of 5g longitudinal, 3g lateral, and 3g vertical acceleration resistance; and

(iii) Use of the standard is carried out under any conditions identified in the railroad's Safe Operation Plan for Tier III Passenger Equipment, as approved by FRA.(c) Railway Group Standard GM/RT2100, Issue Four, ''Requirements for Rail Vehicle Structures,'' Rail Safety and Standards Board Ltd., December 2010 is incorporated by reference into this section with the approval of the Director of the Federal Register under 5 U.S.C. 552(a) and 1 CFR part 51. All approved material is available for inspection at Federal Railroad Administration, Docket Clerk, 1200 New Jersey Avenue SE., Washington, DC and is available from Communications, RSSB, Block 2 Angel Square, 1 Torrens Street, London, England EC1V 1NY, *www.rgsonline.co.uk.* It is also available for inspection at NARA. For information on the availability of this material at NARA, call 202–741–6030 or go to *http://www.archives.gov/federal_register/code_of_federal_regulations/ibr_locations.html.*

Cab Equipment

§ 238.751 Alerters.

(a) An alerter shall be provided in the operating cab of each Tier III trainset, unless in accordance with paragraph (e) of this section the trainset operates in a territory where an alternate technology providing equivalent safety, such as redundant automatic train control or redundant automatic train stop system, is installed.

(b) Upon initiation of the alerter, the engineer must acknowledge the alerter within the time period and according to the parameters specified in the railroad's Safe Operation Plan for Tier

III Passenger Equipment in order for train operation to remain under the full control of the engineer.

(c) If the engineer does not acknowledge the alerter as specified in paragraph (b) of this section, at a minimum a retrievable full service brake application shall occur until the train has stopped, unless the crew intervenes as described in paragraph (d) of this section.

(d) To retrieve the full service brake application described in paragraph (c) of this section, the engineer must acknowledge the alerter and activate appropriate controls to issue a command for brake application as specified in the railroad's Safe Operation Plan for Tier III Passenger Equipment.

(e) If an alternate technology to the alerter is used, the railroad shall conduct a hazard analysis that confirms the ability of the technology to provide an equivalent level of safety. This analysis shall be included in the railroad's Safe Operation Plan for Tier III Passenger Equipment.

§ 238.753 Sanders.

(a) A Tier III trainset shall be equipped with operative sanders, if required by the railroad's Safe Operation Plan for Tier III Passenger Equipment.

(b) Sanders required under this section shall comply with § 229.131(a), (b), and (d) of this chapter, except that instead of the requirements of §§ 229.9 and 229.23 of this chapter:

(1) The requirements of § 238.17 shall apply to the tagging and movement of a Tier III trainset with defective sanders; and

(2) The requirements of the railroad's ITM plan shall apply to the next periodic inspection of such a trainset.

(c) In addition to the requirements in paragraph (b) of this section, the railroad's ITM plan shall specify the ITM requirements for Tier III trainsets equipped with sanders.

Figure 1 to Subpart H of Part 238—Cylindrical Projectile for Use in § 238.721

End-Facing Cab-Glazing Testing

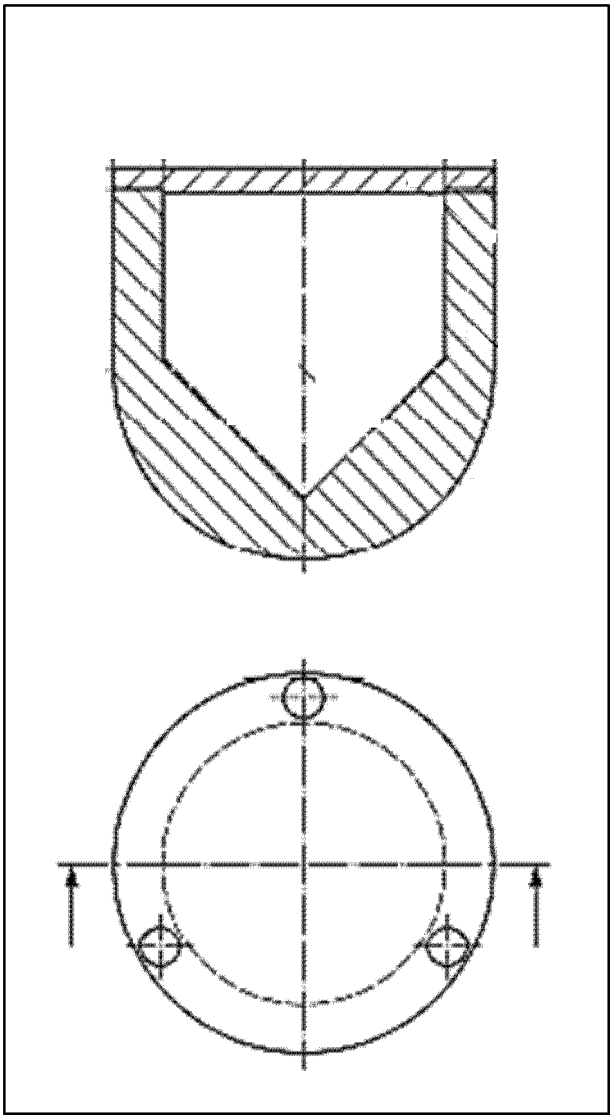

■ 18. Add subpart I to part 238 to read as follows:

Subpart I—Inspection, Testing, and Maintenance Requirements for Tier III Passenger Equipment

Sec.
238.801 Scope.
238.803 Inspection, testing, and maintenance requirements; brake system.
238.805 Periodic tests; brake system.

§ 238.801 Scope.

This subpart contains specific requirements for railroad passenger equipment operating in a shared right-of-way at speeds not exceeding 125 mph and in an exclusive right-of-way without grade crossings at speeds exceeding 125 mph but not exceeding 220 mph.

§ 238.803 Inspection, testing, and maintenance requirements; brake system.

(a) Except as provided in paragraph (b) of this section, Tier III trainsets shall be subject to the ITM requirements of subpart F of this part.

(b)(1) The equivalent of a Class I brake test contained in § 238.313 shall be developed for use where required by this part, and shall be defined in the railroad's ITM plan.

(2) Movement of a trainset with a power brake defect as defined in § 238.15 shall be conducted in accordance with § 238.15, with the following exceptions:

(i) The confirmation of the percentage of operative power brakes required by § 238.15(c)(4)(iv) may be by a technological method specified in the railroad's Safe Operation Plan for Tier III Passenger Equipment;

(ii) The computation of the percentage of operative power brakes required by § 238.15(c)(1) shall be determined by a formula specified in the railroad's Safe Operation Plan for Tier III Passenger Equipment; and

(iii) Operating restrictions determined by the percentage of operative power brakes in a trainset shall be based upon the requirements of § 238.15 when the trainset operates in a shared right-of-way; operating restrictions shall be based upon a percentage of operative brakes as defined in the railroad's Safe Operation Plan for Tier III Passenger Equipment when the trainset operates in a right-of-way exclusively for Tier III passenger equipment.

§ 238.805 Periodic tests; brake system.

(a) Each Tier III trainset shall be subject to the tests and inspections prescribed in the railroad's ITM plan, as approved by FRA. All testing required under this section shall be performed at the intervals specified in the ITM plan. The railroad's ITM plan shall include, but not be limited to, the following requirements:

(1) The filtering devices or dirt collectors located in the main reservoir supply line to the air brake system shall be cleaned, repaired, and replaced under the ITM plan.

(2) All brake control equipment and truck brake equipment shall be cleaned, repaired, and tested under the ITM plan.

(3) The date and place of cleaning, repairing, or testing shall be recorded in the railroad's data management system, and the person performing the work and that person's supervisor shall sign the form electronically. A record of the components of the air brake system that are cleaned, repaired, or tested shall be kept in the railroad's electronic files.

(b) Each periodic inspection shall include, but not be limited to, the following requirements:

(1) All mechanical gauges used by the engineer to aid in the control or braking of the trainset shall be tested by comparison with a dead-weight tester or a test gauge designed for this purpose. A gauge or device shall not be in error more than five percent, or three p.s.i., whichever is less.

(2) All electrical devices and visible insulation shall be inspected.

(3) All cable connections between cars and jumpers that are designed to carry 600 volts or more shall be thoroughly cleaned, inspected, and tested for continuity. A microprocessor-based self-monitoring event recorder, if installed, is exempt from periodic inspection.

■ 19. Add and reserve subpart J to part 238.

Subpart J—Specific Requirements for the Safe Operation Plan for Tier III Passenger Equipment [Reserved]

■ 20. Amend paragraph (c) of Appendix B to part 238 by adding a sentence to the end of note 16 of the table of ''Test Procedures and Performance Criteria for the Flammability and Smoke Emission Characteristics of Materials Used in Passenger Cars and Locomotive Cabs'' to read as follows:

Appendix B to Part 238—Test Methods and Performance Criteria for the Flammability and Smoke Emission Characteristics of Materials Used in Passenger Cars and Locomotive Cabs

* * * * *

(c) * * *

[16] * * * For purposes of this Note, the floor assembly of a vehicle in a Tier III trainset may be tested together with undercar design features that separate the vehicle from the fire source, *i.e.,* skirts and bottom covers, to protect against a fire source under and external to the vehicle. To assess the safety associated with testing the floor assembly in this manner, and to protect against a fire source under the floor assembly but internal to the vehicle, safety must also be demonstrated by conducting a fire hazard analysis that includes the considerations in Note 17.

* * * * *

■ 21. Revise the introductory text of appendix F to part 238 by adding a third paragraph to read as follows:

Appendix F to Part 238—Alternative Dynamic Performance Requirements for Front End Structures of Cab Cars and MU Locomotives

* * * * *

Although the requirements of this appendix are stated in terms applicable to Tier I passenger equipment, they are also applicable to Tier III passenger trainsets under § 238.711. Specifically, the cab ends of Tier III trainsets shall comply with the requirements of this appendix to demonstrate the integrity of the end structure.

* * * * *

■ 22. Add appendix G to part 238 to read as follows:

Appendix G to Part 238—Alternative Requirements for Evaluating the Crashworthiness and Occupant Protection Performance of a Tier I Passenger Trainset

General

This appendix applies to Tier I alternative passenger trainsets, as described below. While the appendix may refer to specific units of rail equipment in a trainset, the alternative requirements in this appendix apply only to a trainset as a whole.

This appendix specifies alternatives to the crashworthiness and occupant protection performance requirements for Tier I passenger equipment in §§ 238.203, Static end strength; 238.205, Anti-climbing mechanism; 238.207, Link between coupling mechanism and car body; 238.209(a), Forward end structure of locomotives, including cab cars and MU locomotives; 238.211, Collision posts; 238.213, Corner posts; and 238.219, Truck-to-carbody attachment. To maintain their integrity, these requirements apply as a whole. They also apply in addition to the requirements of §§ 238.209(b); 238.215, Rollover strength; 238.217, Side structure; and 238.233, Interior fittings and surfaces; and with APTA standards for occupant protection and an AAR recommended practice for locomotive cab seats, as specified in this appendix.

For ease of comparison with the Tier I requirements in subpart C of this part, this appendix is arranged in order by the Tier I section referenced.

Use of this appendix to demonstrate alternative crashworthiness and occupant protection performance for Tier I passenger equipment is subject to FRA review and approval under § 238.201.

Occupied Volume Integrity

(a) Instead of the requirements of § 238.203, the units of a Tier I alternative passenger trainset may demonstrate their occupied volume integrity (OVI) by complying with both the quasi-static compression load and dynamic collision requirements in §§ 238.703(b) and 238.705, respectively.

Override Protection

(b) *Colliding equipment.* Instead of the requirements of § 238.205, the units of a Tier I alternative passenger trainset may demonstrate their ability to resist vertical climbing and override at each colliding interface during a train-to-train collision by complying with the dynamic collision requirements in § 238.707(a).

(c) *Connected equipment.* Instead of the requirements of §§ 238.205 and 238.207, when connected, the units of a Tier I alternative passenger trainset may demonstrate their ability to resist vertical climbing and override by complying with the dynamic collision requirements in § 238.707(b).

Fluid Entry Inhibition

(d) Instead of the requirements of § 238.209(a), each cab end of a Tier I alternative passenger trainset may demonstrate its ability to inhibit fluid entry and provide other penetration resistance by complying with the requirements in § 238.709.

End Structure Integrity of Cab End

(e) Each cab end of a Tier I alternative passenger trainset is subject to the requirements of appendix F to this part to demonstrate cab end structure integrity. For those cab ends without identifiable corner or collision posts, the requirements of appendix F apply to the end structure at the specified locations, regardless of whether the structure at the specified locations is a post.

End Structure Integrity of Non-Cab End

(f) Instead of the applicable requirements of §§ 238.211 and 238.213, the units of a Tier I alternative trainset may demonstrate end structure integrity for other than a cab end by complying with the requirements in § 238.713(b) and (c).

Roof and Side Structure Integrity

(g) A Tier I alternative passenger trainset is subject to the requirements of §§ 238.215 and 238.217 to demonstrate roof and side structure integrity.

Truck Attachment

(h) Instead of the requirements of § 238.219, the units of a Tier I alternative passenger trainset may demonstrate their truck-to-carbody attachment integrity by complying with the requirements in § 238.717 (b) through (e).

Interior Fixture Attachment

(i) A Tier I alternative passenger trainset is subject to the interior fixture requirements in § 238.233. Interior fixtures must also comply with APTA PR–CS–S–006–98, Rev. 1, ''Standard for Attachment Strength of Interior Fittings for Passenger Railroad Equipment,'' Authorized September 2005, and those portions of APTA PR–CS–S–034–99, Rev. 2, ''Standard for the Design and Construction of Passenger Railroad Rolling Stock,'' Authorized June 2006, relating to interior fixtures.

Seat Crashworthiness (Passenger and Crew)

(j) *Passenger seating.* Passenger seating in a Tier I alternative passenger trainset is subject to the requirements for seats in § 238.233 and must also comply with APTA PR–CS–S–016–99, Rev. 2, ''Standard for Passenger Seats in Passenger Rail Cars,'' Authorized October 2010, with the exception of Section 6.0, Seat Durability Testing.

(k) *Crew seating.* Each seat provided for an employee regularly assigned to occupy the cab of a Tier I alternative passenger trainset, and any floor-mounted seat in the cab, must comply with the following:

(1) Section 238.233(e), (f), and (g), including the loading requirements of 8g longitudinally, 4g laterally, and 4g vertically; and

(2) The performance, design, and test criteria of AAR–RP–5104, ''Locomotive Cab Seats,'' April 2008.

■ 23. Add appendix H to part 238 to read as follows:

Appendix H—Rigid Locomotive Design Computer Model Input Data and Geometrical Depiction

As specified in § 238.705(a)(4), this appendix provides input data and a geometrical depiction necessary to create a computer model of the rigid (conventional) locomotive design for use in evaluating the OVI of a Tier III trainset in a dynamic collision scenario. (This appendix may also be applied to a Tier I alternative passenger trainset to evaluate its OVI, in accordance with appendix G).

The input data, in the form of an input file, contains the geometry for approximately the first 12 feet of the rigid locomotive design. Because this input file is for a half-symmetric model, a locomotive mass corresponding to 130,000 pounds of weight is provided for modeling purposes—half the 260,000 pounds of weight specified for the locomotive in § 238.705(a)(4). Figure 1 to this appendix provides two views of the locomotive's geometric depiction.

**********BEGIN INPUT FILE**********

```
*Heading
** USDOT/VOLPE CENTER FINITE ELEMENT MODEL
** FULLY RIGID LOCOMOTIVE DESIGNED FOR 1-D MODELING
** LOCOMOTIVE BASED ON F-40 TYPE
** HALF-SYMMETRY INPUT FILE
** WHOLE LOCOMOTIVE WEIGHT: 260,000 POUNDS
** UNITS: INCHES/POUNDS/SECONDS
** JULY, 2010
** Generated by: Abaqus/CAE 6.10-1
**
** PARTS
**
*Part, name=PART-1
*Node
      1, 167.942993, 59.8800011, 98.0625
      2, 161.143005, 59.8800011, 98.0625
      3, 167.942993, 59.8800011, 66.0625
      4, 78.322998, 59.8800011, 66.0625
      5, 167.942993, 0., 179.5625
      6, 81.322998, 0., 179.5625
      7, 54.3730011, 0., 166.862503
      8, 167.942993, 33.6899986, 179.5625
      9, 81.322998, 59.8800011, 133.942505
      10, 78.322998, 59.8800011, 133.942505
      11, 78.322998, 59.8800011, 163.502502
      12, 81.322998, 59.8800011, 161.502502
      13, 78.322998, 59.8800011, 130.942505
      14, 78.322998, 59.8800011, 116.002502
      15, 161.143005, 59.8800011, 133.942505
      16, 161.143005, 59.8800011, 161.502502
      17, 161.143005, 59.8800011, 101.0625
      18, 161.143005, 59.8800011, 130.942505
      19, 161.143005, 59.8800011, 163.502502
      20, 167.942993, 59.8800011, 163.502502
      21, 167.942993, 59.8800011, 167.0625
      22, 167.942993, 37.8079987, 178.462494
      23, 81.322998, 33.6899986, 179.5625
      24, 81.322998, 37.8079987, 178.472504
      25, 57.5040016, 9., 166.862503
      26, 58.125, 10.7849998, 166.862503
      27, 66.6159973, 35.0439987, 166.862503
      28, 58.132, 10.783, 177.5625
      29, 57.4830017, 8.99190044, 177.5625
      30, 58.132, 10.783, 179.5625
      31, 57.4830017, 8.99190044, 179.5625
      32, 75.310997, 59.862999, 167.052505
      33, 62.2120018, 59.8800011, 119.8125
      34, 63.9179993, 56.5620003, 130.160507
      35, 64.3919983, 56.5470009, 131.889496
      36, 72.861969, 56.5663757, 162.376297
      37, 66.6299973, 35.0439987, 177.5625
      38, 48.9730415, 2.24654722, 144.558914
      39, 53.9304123, 2.53624678, 162.100143
      40, 81.322998, 61.6300011, 133.942505
      41, 161.143005, 61.6300011, 133.942505
      42, 81.322998, 61.6300011, 130.942505
      43, 161.143005, 61.6300011, 130.942505
      44, 167.942993, 61.6300011, 101.0625
      45, 167.942993, 61.6300011, 161.502502
      46, 161.143005, 61.6300011, 101.0625
      47, 161.143005, 61.6300011, 161.502502
      48, 20.6900311, 0., 136.253281
      49, 18.1748695, 59.2774734, 60.0625
      50, 22.07197, 59.2542038, 66.0625
```

```
51, 27.934, 41., 9.0625
52, 18.3192978, 0., 36.7498283
53, 15.5744066, 0., 36.7498283
54, 1.76894331, 5.32121038, 28.9578266
55, 3.57440639, 6.60263443, 28.9578266
56, 2.67061162, 5.68379116, 28.9578266
57, 0.401960254, 3.98941922, 28.9578266
58, 0.977025032, 4.76697016, 28.9578266
59, 0.099995479, 3.06867123, 28.9578266
60, 0.099995479, 1.14263237, 30.0413265
61, 0.099995479, 0., 28.9578266
62, 3.51490474, 0.654233992, 28.9578266
63, 3.98739839, 0., 28.9578266
64, 0.099995479, 0., 30.0413265
65, 3.31792188, 0., 30.0413265
66, 3.40018868, 1.60872662, 28.9578266
67, 2.67061162, 5.68379116, 40.0418282
68, 0.099995479, 1.14263237, 38.9583282
69, 0.099995479, 0., 40.0418282
70, 0.977025032, 4.76697016, 40.0418282
71, 1.76894331, 5.32121038, 40.0418282
72, 0.099995479, 0., 38.9583282
73, 3.98739839, 0., 40.0418282
74, 3.31792188, 0., 38.9583282
75, 0.099995479, 3.06867123, 40.0418282
76, 0.401960254, 3.98941922, 40.0418282
77, 3.51490474, 0.654233992, 40.0418282
78, 5.75145721, 5.7997303, 40.0418282
79, 15.5720844, 3.87475181, 31.1248264
80, 18.5401859, 3.81961679, 31.1248264
81, 15.5744066, 0., 31.1248264
82, 3.40018868, 1.60872662, 40.0418282
83, 3.57440639, 6.60263443, 40.0418282
84, 30.2979393, 56.9446068, 128.484482
85, 58.9190598, 59.8919106, 66.0608368
86, 161.143005, 61.6300011, 116.002502
87, 58.7904701, 30.4786301, 144.5345
88, 59.8902054, 34.9131279, 142.917557
89, 161.143005, 59.8800011, 116.002502
90, 57.4934998, 8.99594975, 172.212494
91, 58.1285019, 10.7840004, 172.212494
92, 15.5744066, 0., 32.2498283
93, 18.3192978, 0., 31.1248264
94, 18.3192978, 0., 32.2498283
95, 15.5744066, 1.95114112, 31.1248264
96, 58.2618256, 31., 142.816605
97, 59.3854752, 34.7812653, 141.263779
98, 67.881691, 38.7345238, 178.0345
99, 66.3495865, 34.3354263, 179.5625
100, 161.143005, 59.8800011, 167.0625
101, 66.1316681, 59.8799019, 133.987289
102, 74.003212, 59.8690262, 162.327911
103, 68.1072845, 39.3478088, 166.862503
104, 161.018005, 59.8800011, 66.0625
105, 14.4651852, 0., 31.1248264
106, 8.65684605, 0.948336065, 41.1248283
107, 8.69752693, 0., 41.1248283
108, 8.71603775, 2.63976431, 40.0414925
109, 9.53989887, 2.18784833, 40.0414925
110, 14.1617727, 1.99973011, 31.1248264
111, 5.75145721, 5.7997303, 37.8748283
112, 3.39199758, 9.62334061, 37.8748283
113, 14.4651852, 0., 37.8748283
114, 10.4428129, 1.99973011, 37.8748283
115, 8.71603775, 2.63976431, 31.1248264
116, 9.53989887, 2.18784833, 37.8748283
```

```
117, 3.34182882, 8.61192608, 37.8748283
118, 15.5744066, 0., 37.8748283
119, 15.5720844, 3.87475181, 37.8748283
120, 13.7156467, 4.44362879, 31.1248264
121, 3.55879021, 10.6221542, 31.1248264
122, 9.53989887, 2.18784833, 31.1248264
123, 8.71603775, 2.63976431, 37.8748283
124, 11.6615076, 6.49122286, 37.8748283
125, 9.37123108, 10.8283968, 37.8748283
126, 14.1617727, 1.99973011, 37.8748283
127, 3.4053607, 7.60121346, 37.8748283
128, 15.5744066, 2.12472296, 37.8748283
129, 18.3192978, 0., 37.8748283
130, 13.9651852, 0., 27.8748264
131, 4.45807409, 2.11810708, 27.8748264
132, 14.4744062, 0., 27.8748264
133, 8.71603775, 2.63976431, 27.8748264
134, 13.7156467, 4.44362879, 37.8748283
135, 3.55879021, 10.6221542, 37.8748283
136, 18.5401859, 3.81961679, 37.8748283
137, 3.57440639, 6.60263443, 37.8748283
138, 14.6130104, 4.054636, 37.8748283
139, 10.4428129, 1.99973011, 31.1248264
140, 8.73545933, 11.5156822, 37.8748283
141, 3.83903623, 11.5952816, 37.8748283
142, 3.70096731, 2.42872977, 40.0414925
143, 14.1742048, 1.95114088, 41.1248283
144, 10.4428129, 1.99973011, 41.1248283
145, 9.53989887, 2.18784833, 41.1248283
146, 13.9651852, 0., 41.1248283
147, 14.4744062, 0., 41.1248283
148, 8.71603775, 2.63976431, 41.1248283
149, 8.18554401, 1.77063227, 41.1248283
150, 10.4428129, 1.99973011, 40.0414925
151, 6.90897226, 3.09021854, 41.1248283
152, 6.90897226, 3.09021854, 40.0414925
153, 7.3380537, 2.19558096, 41.1248283
154, 3.70096731, 2.42872977, 41.1248283
155, 4.45807409, 2.11810708, 41.1248283
156, 11.6615076, 6.49122286, 31.1248264
157, 9.37123108, 10.8283968, 31.1248264
158, 3.57440639, 6.60263443, 31.1248264
159, 14.6130104, 4.054636, 31.1248264
160, 8.73545933, 11.5156822, 31.1248264
161, 3.83903623, 11.5952816, 31.1248264
162, 3.34182882, 8.61192608, 31.1248264
163, 3.39199758, 9.62334061, 31.1248264
164, 3.4053607, 7.60121346, 31.1248264
165, 3.70096731, 2.42872977, 27.8748264
166, 8.65684605, 0.948336065, 27.8748264
167, 8.18554401, 1.77063227, 27.8748264
168, 7.83922768, 2.97724795, 31.1248264
169, 3.70096731, 2.42872977, 31.1248264
170, 8.69752693, 0., 27.8748264
171, 7.83922768, 2.97724795, 27.8748264
172, 10.4428129, 1.99973011, 27.8748264
173, 3.70096731, 2.42872977, 28.9581604
174, 7.3380537, 2.19558096, 27.8748264
175, 14.1742048, 1.95114088, 27.8748264
176, 9.53989887, 2.18784833, 27.8748264
177, 47.7130013, 0., 142.862503
178, 57.5089989, 0., 177.5625
179, 57.5089989, 0., 179.5625
180, 45.2702484, 31., 142.381302
181, 44.7895966, 35.7113838, 140.807663
182, 44.3954277, 0., 142.862503
```

```
183, 45.0859528, 56.9468269, 129.232864
184, 27.934, 26.02841, 48.1875
185, 26.3169994, 31., 134.151077
186, 25.4385452, 31., 132.291351
187, 29.5859261, 59.3337784, 119.820122
188, 27.944397, 59.3558388, 66.062233
189, 11.9149094, 10.3664589, 66.0625
190, 9.76114368, 0., 66.0625
191, 19.1986504, 0., 133.730804
192, 11.0030947, 25.8867302, 60.0625
193, 27.934, 0., 48.1875
194, 27.934, 26.125, 60.0625
195, 11.067338, 26.125, 66.0625
196, 5.72649717, 0., 60.0625
197, 27.934, 31., 48.1875
198, 5.70541191, 0., 63.0624962
199, 12.03866, 31.1362305, 60.0625
200, 18.114048, 59.2658386, 63.0621109
201, 27.9339981, 59.461689, 60.0613098
202, 27.934, 0., 60.0560417
203, 7.81957102, 10.375, 63.0632477
204, 7.81957102, 10.3664589, 66.0625
205, 27.934, 10.375, 52.159462
206, 27.934, 0., 52.1595879
207, 27.934, 10.4399996, 9.0625
208, 27.934, 31.0390625, 9.0625
209, 27.934, 46.629631, 24.1736107
210, 27.934, 55.4259262, 47.7847214
211, 27.934, 59.2962952, 58.1736107
212, 27.934, 10.4399996, 26.1248264
213, 27.934, 30.9188347, 25.1098576
214, 7.91185236, 10.375, 60.0625
215, 27.934, 10.375, 60.0625
216, 15.1792574, 26.0783482, 66.0625
217, 5.68432665, 0., 66.0625
218, 18.0532093, 59.2542038, 66.0625
219, 27.2928429, 10.375, 60.0625
220, 27.934, 0., 66.0625
221, 27.934, 10.375, 66.0625
222, 13.7154636, 10.3812084, 65.0625
223, 27.2928543, 10.375, 62.0625
224, 25.2556648, 10.375, 65.0625
225, 27.934, 31.125, 66.0625
226, 27.934, 31.125, 60.0625
227, 12.1000671, 31.1362305, 66.0625
228, 16.2295151, 31.1334229, 66.0625
229, 27.934, 25.875, 52.0625
230, 11.0631142, 25.8867302, 63.0293884
231, 27.934, 31.0490627, 52.0634613
232, 12.1452255, 31.1362305, 63.0293884
233, 20.5744057, 0., 42.1875
234, 17.5744057, 0., 42.1875
235, 17.5744057, 0., 39.1875
236, 20.5744057, 10.4399996, 30.3899994
237, 20.5744057, 10.4399996, 39.1875
238, 20.5744057, 10.4399996, 42.1875
239, 17.5744057, 10.4399996, 39.1875
240, 17.5744057, 10.4399996, 42.1875
241, 27.934, 10.4399996, 42.2693863
242, 27.934, 10.4399996, 48.1875
243, 27.184, 9.43999958, 26.1248264
244, 27.184, 0., 26.1248264
245, 27.184, 9.43999958, 30.8648262
246, 27.184, 0., 30.8648262
247, 18.5744057, 10.4399996, 28.1248264
248, 18.5744057, 10.4399996, 26.1248264
```

```
      249, 18.5744057, 9.43999958, 26.1248264
      250, 18.5744057, 0., 26.1248264
      251, 18.5744057, 9.43999958, 30.8648262
      252, 18.5744057, 0., 30.8648262
      8888888, 150.0, 0., 34.5
      253, 22.2162247, 59.3531151, 60.0625
      254, 167.942993, 61.6300011, 116.002502
      255, 167.942993, 61.6300011, 130.942505
      256, 167.942993, 61.6300011, 133.942505
      257, 161.143005, 37.8079987, 178.462494
      258, 161.143005, 33.6899986, 179.5625
      259, 161.143005, 0., 179.5625
      260, 56.3731041, 9.4654789, 162.199432
      261, 57.0013237, 11.2475662, 162.22496
      262, 67.0327148, 39.7239189, 162.592499
      263, 65.5448227, 35.4830818, 162.57222
      264, 23.8785725, 23.25, 132.651215
      265, 20.7586231, 7.75, 133.370941
*Element, type=R3D4
1, 87, 96, 97, 88
2, 91, 26, 25, 90
3, 28, 91, 90, 29
4, 30, 28, 29, 31
6, 13, 42, 40, 10
7, 47, 45, 20, 19
8, 44, 46, 2, 1
11, 201, 188, 225, 226
12, 202, 215, 221, 220
13, 233, 238, 242, 193
14, 197, 213, 209, 210
15, 212, 207, 208, 213
16, 213, 208, 51, 209
17, 234, 240, 238, 233
18, 239, 240, 234, 235
19, 239, 237, 238, 240
20, 226, 225, 227, 232
21, 197, 231, 229, 184
22, 231, 226, 194, 229
23, 215, 194, 229, 205
24, 202, 215, 205, 206
25, 206, 205, 242, 193
26, 205, 229, 184, 242
27, 203, 204, 217, 198
28, 203, 214, 196, 198
29, 204, 203, 230, 195
30, 195, 230, 232, 227
31, 230, 203, 214, 192
32, 232, 230, 192, 199
33, 232, 227, 218, 200
34, 199, 232, 200, 49
35, 218, 227, 228, 50
36, 228, 227, 195, 216
37, 195, 204, 189, 216
38, 204, 217, 190, 189
39, 220, 190, 189, 221
40, 228, 225, 221, 189
41, 6, 31, 99, 23
43, 31, 29, 178, 179
44, 23, 99, 98, 24
47, 98, 103, 27, 37
48, 30, 28, 37, 99
50, 16, 47, 41, 15
51, 21, 20, 19, 100
52, 100, 19, 11, 32
53, 34, 35, 88, 97
54, 35, 101, 102, 36
```

55, 11, 12, 16, 19
57, 10, 9, 12, 11
58, 101, 10, 11, 102
59, 41, 43, 42, 40
60, 15, 41, 40, 9
61, 33, 14, 13, 101
64, 13, 14, 89, 18
65, 89, 86, 43, 18
66, 89, 17, 46, 86
67, 89, 104, 4, 14
68, 104, 3, 1, 2
69, 4, 14, 33, 85
71, 185, 186, 191, 48
73, 187, 186, 228, 50
74, 225, 228, 50, 188
75, 34, 183, 181, 97
76, 97, 181, 180, 96
77, 84, 183, 181, 185
79, 96, 180, 182, 177
80, 48, 185, 180, 182
81, 251, 245, 243, 249
82, 249, 243, 244, 250
83, 252, 250, 249, 251
84, 246, 245, 251, 252
85, 46, 44, 254, 86
86, 86, 254, 255, 43
87, 43, 255, 256, 41
88, 41, 256, 45, 47
89, 100, 21, 22, 257
90, 257, 22, 8, 258
91, 258, 8, 5, 259
92, 23, 258, 259, 6
93, 24, 257, 258, 23
94, 32, 100, 257, 24
95, 33, 101, 35, 34
96, 42, 13, 18, 43
97, 85, 33, 187, 188
99, 96, 177, 38, 87
100, 7, 39, 38, 177
101, 26, 261, 260, 25
102, 7, 25, 260, 39
103, 261, 263, 27, 26
104, 27, 263, 262, 103
105, 262, 36, 32, 103
107, 204, 203, 215, 221
109, 50, 188, 201, 253
110, 50, 253, 200, 218
112, 75, 76, 57, 59
113, 76, 70, 58, 57
114, 70, 71, 54, 58
115, 71, 67, 56, 54
116, 141, 140, 160, 161
117, 137, 127, 164, 158
118, 127, 117, 162, 164
119, 117, 112, 163, 162
120, 112, 135, 121, 163
121, 135, 141, 161, 121
122, 81, 132, 130, 105
123, 136, 80, 79, 119
124, 119, 118, 129, 136
125, 81, 93, 80, 79
126, 146, 147, 118, 113
127, 140, 125, 157, 160
128, 125, 124, 156, 157
129, 124, 134, 120, 156
130, 107, 106, 166, 170

131, 106, 149, 167, 166
132, 149, 153, 174, 167
133, 153, 155, 131, 174
134, 142, 82, 66, 173
135, 66, 62, 77, 82
136, 77, 73, 63, 62
137, 125, 140, 141, 135
138, 60, 68, 74, 65
141, 153, 155, 154, 151
142, 154, 142, 152, 151
143, 151, 153, 149, 148
144, 149, 106, 145, 148
145, 148, 151, 152, 108
146, 108, 109, 145, 148
147, 145, 109, 150, 144
148, 118, 128, 143, 147
149, 82, 142, 76, 75
151, 152, 142, 67, 83
152, 108, 78, 83, 152
153, 128, 119, 138, 126
154, 116, 114, 150, 109
155, 109, 116, 123, 108
156, 108, 123, 111, 78
157, 78, 111, 137, 83
158, 126, 138, 134, 114
159, 123, 124, 134, 116
160, 123, 111, 125, 124
163, 117, 127, 137, 125
164, 125, 135, 112, 117
165, 174, 171, 165, 131
166, 133, 167, 174, 171
167, 176, 166, 167, 133
168, 81, 95, 175, 132
169, 61, 64, 65, 63
170, 72, 69, 73, 74
171, 63, 73, 74, 65
172, 75, 69, 73, 77
174, 62, 59, 61, 63
176, 59, 57, 173, 66
180, 160, 157, 121, 161
181, 157, 162, 163, 121
182, 157, 158, 164, 162
183, 79, 159, 110, 95
184, 159, 120, 139, 110
186, 175, 110, 139, 172
187, 139, 122, 176, 172
188, 176, 122, 115, 133
189, 133, 115, 168, 171
190, 171, 168, 169, 173
192, 156, 122, 139, 120
195, 158, 55, 173, 169
197, 145, 107, 146, 144
198, 143, 144, 146, 147
199, 142, 71, 70, 76
200, 120, 134, 138, 159
201, 159, 138, 119, 79
202, 172, 170, 166, 176
203, 175, 130, 170, 172
205, 67, 137, 158, 56
210, 158, 168, 156, 157
211, 93, 94, 92, 81
212, 53, 118, 129, 52
215, 170, 107, 113, 105
216, 105, 92, 53, 113
221, 155, 142, 173, 131
222, 61, 64, 60, 59

```
223, 72, 69, 75, 68
224, 68, 60, 59, 75
226, 143, 126, 150, 144
228, 231, 211, 210, 197
229, 226, 231, 211, 201
230, 221, 215, 194, 225
233, 231, 229, 230, 232
235, 183, 187, 33, 34
236, 212, 248, 247, 236
237, 241, 212, 236, 237
240, 197, 184, 212, 213
242, 190, 189, 265, 191
243, 189, 216, 264, 265
244, 216, 228, 186, 264
*Element, type=R3D3
5, 16, 47, 19
9, 2, 17, 46
10, 10, 40, 9
42, 31, 179, 6
45, 24, 32, 98
46, 98, 103, 32
49, 99, 98, 37
56, 11, 32, 102
62, 13, 10, 101
63, 242, 238, 241
70, 84, 185, 186
72, 187, 84, 186
78, 181, 180, 185
98, 50, 188, 187
106, 32, 102, 36
108, 215, 203, 214
111, 200, 253, 49
139, 65, 64, 60
140, 68, 72, 74
150, 142, 71, 67
161, 114, 116, 134
162, 111, 137, 125
173, 75, 77, 82
175, 66, 59, 62
177, 173, 58, 57
178, 173, 54, 58
179, 173, 56, 54
185, 175, 110, 95
191, 165, 173, 171
193, 173, 56, 55
194, 115, 122, 156
196, 106, 107, 145
204, 175, 132, 130
206, 56, 158, 55
207, 137, 67, 83
208, 169, 168, 158
209, 168, 115, 156
213, 81, 92, 105
214, 53, 118, 113
217, 130, 105, 170
218, 113, 146, 107
219, 131, 165, 173
220, 142, 155, 154
225, 126, 114, 150
227, 128, 126, 143
231, 225, 194, 226
232, 231, 226, 232
234, 84, 187, 183
238, 241, 237, 238
239, 184, 242, 241
241, 184, 241, 212
```

```
*Nset, nset=PART-1-RefPt_, internal
8888888,
*Elset, elset=PART-1, generate
1, 244, 1
*End Part
**
**
** ASSEMBLY
**
*Assembly, name=Assembly
**
*Instance, name=PART-1-1, part=PART-1
*End Instance
**
*Nset, nset=_Ref-Pt_PART-1-1_8888888, internal, instance=PART-1-1
8888888,
*Nset, nset=LOCO_MASS, instance=PART-1-1
8888888,
*Nset, nset=LOCO-NODES, instance=PART-1-1, generate
1, 265, 1
*Elset, elset=LOCO-ELEMENTS, instance=PART-1-1, generate
1, 244, 1
*Rigid Body, ref node=PART-1-1.PART-1-RefPt_, elset=PART-1-1.PART-1
*Element, type=MASS, elset=LOCO_MASS_LOCO_MASS_X_
1, PART-1-1.8888888
*Mass, elset=LOCO_MASS_LOCO_MASS_X_
336.439,
*End AssemblyEXTRACT>
******************************END INPUT FILE*************************
```

Figure 1 to Appendix H—Side and Front Views of Rigid Locomotive Model

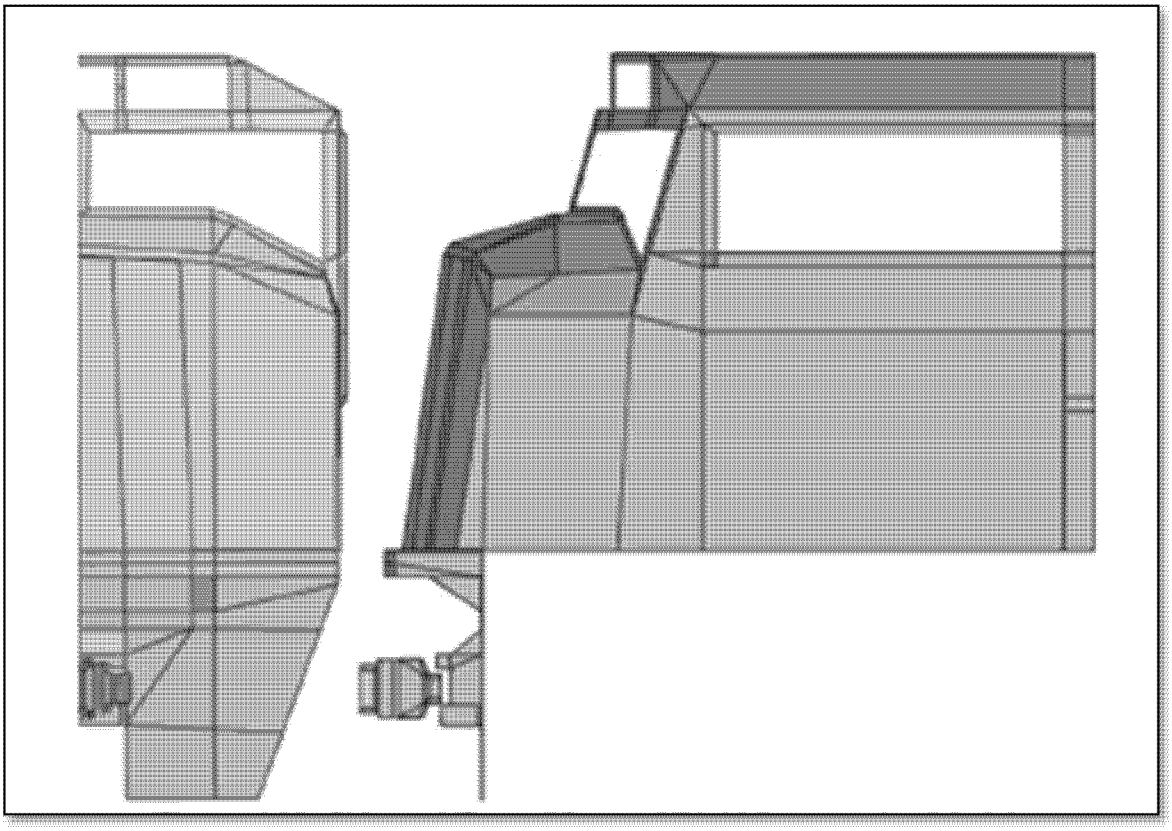

Sarah Feinberg,
Administrator.

[FR Doc. 2016–28280 Filed 12–5–16; 8:45 am]
BILLING CODE 4910–06–C

FEDERAL REGISTER

Vol. 81 Tuesday,

No. 234 December 6, 2016

Part III

Department of Defense

General Services Administration

National Aeronautics and Space Administration

48 CFR Parts 2, 4, 7, et al.

Federal Acquisition Regulation: Set-Asides Under Multiple-Award Contracts; Proposed Rule

DEPARTMENT OF DEFENSE

GENERAL SERVICES ADMINISTRATION

NATIONAL AERONAUTICS AND SPACE ADMINISTRATION

48 CFR Parts 2, 4, 7, 8, 9, 10, 13, 15, 16, 19, 42, and 52

[FAR Case 2014–002; Docket No. 2014–0002, Sequence No. 1]

RIN 9000–AM93

Federal Acquisition Regulation: Set-Asides Under Multiple-Award Contracts

AGENCY: Department of Defense (DoD), General Services Administration (GSA), and the National Aeronautics and Space Administration (NASA).

ACTION: Proposed rule.

SUMMARY: DoD, GSA, and NASA are proposing to amend the Federal Acquisition Regulation (FAR) to implement regulatory changes made by the Small Business Administration, which provide Government-wide policy for partial set-asides and reserves, and setting aside orders for small business concerns under multiple-award contracts.

DATES: Interested parties should submit written comments to the Regulatory Secretariat Division at one of the addresses shown below on or before February 6, 2017 to be considered in the formation of the final rule.

ADDRESSES: Submit comments in response to FAR case 2014–002 by any of the following methods:

- *Regulations.gov: http://www.regulations.gov.* Submit comments via the Federal eRulemaking portal by searching for ''FAR Case 2014–002.'' Select the link ''Comment Now'' that corresponds with ''FAR Case 2014–002.'' Follow the instructions provided on the screen. Please include your name, company name (if any), and ''FAR Case 2014–002'' on your attached document.
- *Mail:* General Services Administration, Regulatory Secretariat Division (MVCB), ATTN: Ms. Flowers, 1800 F Street NW., 2nd Floor, Washington, DC 20405.

Instructions: Please submit comments only and cite FAR Case 2014–002, in all correspondence related to this case. All comments received will be posted without change to *http://www.regulations.gov,* including any personal and/or business confidential information provided.

To confirm receipt of your comment(s), please check *www.regulations.gov,* approximately two to three days after submission to verify posting (except allow 30 days for posting of comments submitted by mail).

FOR FURTHER INFORMATION CONTACT: Ms. Mahruba Uddowla, Procurement Analyst, at 703–605–2868 or by email at *mahruba.uddowla@gsa.gov* for clarification of content. For information pertaining to status or publication schedules, contact the Regulatory Secretariat Division at 202–501–4755. Please cite FAR Case 2014–002.

SUPPLEMENTARY INFORMATION:

I. Background

DoD, GSA, and NASA are proposing to revise the FAR to implement regulatory changes made by the Small Business Administration (SBA) in its final rule at 78 FR 61114, dated October 2, 2013, regarding the use of small business partial set-asides, reserves, and orders placed under multiple-award contracts. SBA's final rule implements the statutory requirements set forth at section 1331 of the Small Business Jobs Act of 2010 (15 U.S.C. 644(r)), (Jobs Act).

The Jobs Act, signed into law by President Obama on September 27, 2010, was a landmark event aimed at reenergizing small business entrepreneurship. It provided an array of tools to enhance small business participation in Federal procurement. In particular, section 1331 of the Jobs Act, the focus of this rule, provided authority for three acquisition techniques to facilitate contracting with small businesses on multiple-award contracts:

(1) Setting aside part or parts of the requirement for small businesses.

(2) Reserving one or more contract awards for small business concerns under full and open multiple-award procurements.

(3) Setting aside orders placed against multiple-award contracts, notwithstanding the fair opportunity requirements of 10 U.S.C. 2304c(b) and 41 U.S.C. 4106(c).

Multiple-award contracts, due to their inherent flexibility, competitive nature, and administrative efficiency, are commonly used in Federal procurement. They have proven to be an effective means of contracting for large quantities of supplies and services for which the quantity and delivery requirements cannot be definitively determined at contract award. However, prior to 2011, the FAR was largely silent on the use of acquisition strategies to promote small business participation in conjunction with multiple-award contracts.

DoD, GSA, and NASA published an interim rule in the **Federal Register**, at 76 FR 68032, on November 2, 2011, under FAR Case 2011–024, so that Federal agencies could begin taking advantage of the authorities set forth in section 1331 while SBA developed rules with additional detail on the use of these tools. DoD, GSA, and NASA intended to provide more complete guidance after publication of SBA's final rule.

This proposed rule provides additional guidance on the use of partial set-asides, reserves, and set-asides of orders under multiple-award contracts, based on SBA's final rule published in the **Federal Register** at 78 FR 61114, dated October 2, 2013. It also clarifies agencies' and small business contractors' responsibilities with respect to performance of work requirements, *i.e.,* the limitations on subcontracting and the nonmanufacturer rule. Inasmuch as small businesses have this preference, compliance with the limitations on subcontracting and the nonmanufacturer rule is essential to assure that the small business contractor performs the appropriate percentage of requirements in contracts or orders that have been set aside, in total or in part, and is not acting as a pass-through.

Because the interim rule described above to implement section 1331 of the Jobs Act has already authorized agencies to use partial set-asides, reserves, and order set-asides under multiple award contracts, agencies are encouraged to provide feedback on their use of these tools to date and how their use of the tools compares to the guidance and procedures outlined in this proposed rule.

II. Discussion and Analysis

A. Analysis of Public Comments

DoD, GSA, and NASA reviewed the comments to the FAR interim rule in development of this proposed rule. Many of the public comments submitted in response to the interim rule have been overcome by events, primarily the issuance of SBA's final rule. A discussion of the comments is as follows:

- *Clarification of new multiple-award contract procedures.*

Comment: Many respondents indicated that the guidance provided in the interim rule lacked clarity.

Response: The intent of the interim rule was to provide authority to Federal agencies for using the new acquisition tools established by section 1331 (15 U.S.C. 644(r)) as quickly as possible,

allowing time for SBA to complete the drafting, coordination, and publication process for its forthcoming, more explicit, regulatory guidance. SBA has since completed these efforts and published the requisite regulatory changes in its final rule (78 FR 61114, dated October 2, 2013). This proposed rule implements the regulatory changes in SBA's final rule and provides more in-depth guidance in the FAR.

One respondent pointed out that the prescription for new FAR clause 52.219–13, Notice of Set-Aside of Orders, states the purpose of including the clause but not the types of solicitations and contracts in which inclusion of 52.219–13 is required. Language has been added in the proposed rule clarifying the circumstances under which clause 52.219–13 should be used.

• *Updating of Federal data systems.*

Comment: A few respondents mentioned that Federal data systems such as the Federal Procurement Data System (FPDS) and FedBizOpps do not presently have the capability to accept the new data inputs associated with the implementation of section 1331 (15 U.S.C. 644(r)).

Response: This concern is duly noted. The system enhancements needed to accommodate the new data requirements are in process.

• *Application of the limitations on subcontracting to multiple-award contracts.*

Comment: A number of respondents pointed out that the limitations on subcontracting requirements only come into play when a small business receives a contract award under a small business set-aside and should not apply when a small business receives a contract award under a full and open solicitation, even when the award was made pursuant to a reserve under a full and open, multiple-award solicitation.

Response: The interim rule did not change the basic requirements for the application of the limitations on subcontracting, *i.e.,* the limitations on subcontracting restrictions only apply when the small business contractor received the award as the result of a solicitation that limited the field of potential offerors to small businesses. SBA, in its final rule, further clarified that the limitations on subcontracting do not apply to contract reserves but will apply to orders that are set aside under such contracts.

• *Written justifications for small business set-asides.*

Comment: One respondent stated that a written justification should be required for order set-asides under multiple-award contracts.

Response: The interim rule did not change FAR subpart 6.2, which provides that a written justification is not required for small business set-asides or set-asides to any small business concern participating in the socioeconomic programs identified at FAR 19.000(a). In addition, section 1331 (15 U.S.C. 644(r)) established an exception to the fair opportunity requirements for set-asides of orders under multiple-award contracts, which was incorporated into FAR subparts 8.4 and 16.5 under the interim rule. However, contracting officers are required to adhere to the criteria at FAR 19.502–2 to determine whether or not a small business set-aside is feasible before proceeding with this acquisition strategy.

• *Mandatory set aside of orders below the simplified acquisition threshold.*

Comment: A number of respondents stated that 15 U.S.C. 644(j) requires orders between the micropurchase threshold and the simplified acquisition threshold to be automatically set aside for small business, and recommended amendments to the FAR to ensure this.

Response: The interim FAR rule was published in advance of SBA's own rulemaking to provide authority for contracting officers to use the new acquisition tools established in section 1331 (15 U.S.C. 644(r)) as quickly as possible. The proposed FAR rule implements the regulatory changes provided in SBA's final rule, including clarification of the procedures for setting aside task and delivery orders under multiple-award contracts. SBA's rule does not require orders to be set aside.

• *Out-of-scope comments.*

Comment: A number of respondents submitted comments that are out of scope of both the interim rule and this proposed rule. These comments ranged from updating the clause matrix for clauses other than those prescribed in FAR part 19 to providing guidance on contractor team arrangements under Federal Supply Schedules to concerns associated with the bundling of requirements.

Response: No changes were made for the out-of-scope comments.

B. Summary of Significant Changes

• *Partial set-asides.*

The proposed rule clarifies the distinction between the use of partial set-asides on multiple-award contracts and partial set-asides on all other contracts. Section 1331 only addresses multiple-award contracts and provides that partial set-asides should be considered when market research indicates a total set-aside is not feasible, and the acquisition can be divided into smaller discrete portions or categories which can then be set aside with the reasonable expectation of obtaining adequate competition from small business, and a fair market price. For all other contracts, the Small Business Act already mandated that partial set-asides be considered when market research indicates a total set-aside is not feasible, and the acquisition can be divided into smaller discrete portions or categories which can then be set aside with the reasonable expectation of obtaining adequate competition from small business, and a fair market price. The proposed rule expands on the current guidance provided in the FAR for the use of partial small business set-asides and initiates changes to improve the overall process. Most significantly, small businesses will no longer be required to submit an offer on the non-set-aside portion of a solicitation in order to be considered for the set-aside portion of the solicitation.

• *Reserves.*

The proposed rule adds substantial coverage for the new concept of a ''reserve''. Reserves are used in solicitations for a multiple-award contract when a total or a partial set-aside of the work is not feasible, but the agency wants to be sure that small businesses participate at the prime contract level.

• *Orders under multiple-award contracts.*

The proposed rule builds on the guidance provided in the FAR interim rule, published in the **Federal Register** at 76 FR 68032, on November 2, 2011, for setting aside orders under multiple-award contracts and provides several new methodologies to complement various acquisition conditions. For example, in solicitations employing a partial set-aside of a multiple-award contract, the contracting officer may establish terms and conditions in the solicitation and resultant contract providing that all subsequent task or delivery orders are set aside for any of the small businesses awarded contracts under the set-aside portion. Or, the contracting officer may state in the solicitation and resultant contract that the determination to set aside an order will be made on a case-by-case basis. This flexibility allows the contracting officer to employ the ordering technique that is best suited to the surrounding acquisition environment.

• *Assignment of NAICS codes and size standards.*

The proposed rule provides new guidance for assigning North American Industry Category System (NAICS) codes in solicitations that will result in

multiple-award contracts. Contracting officers have the discretion to—

(1) Assign one NAICS code (and corresponding size standard) to the entire solicitation; or

(2) When the procurement can be divided into portions or categories, assign each a NAICS code and corresponding size standard which best describes the principal purpose attributed to the part or category.

• *Application of the limitations on subcontracting and the nonmanufacturer rule.*

The proposed rule moves the nonmanufacturer rule coverage and limitations on subcontracting together in FAR part 19. Collectively referred to as the ''performance of work'' requirements, these restrictions set forth the contractual obligations of small business concerns awarded contracts or orders by virtue of their small business status. Limitations on subcontracting are the minimum percentages of work the prime small business contractor must itself perform. The limitations currently appear in the clauses; the proposed rule also places them in FAR part 19 for easier reference by contracting officers. In addition, the proposed rule clarifies that compliance with the limitations on subcontracting may be determined by measuring the minimum percentage of work performed at the aggregate contract level or order level. The proposed rule also clarifies that the performance of work requirements do not apply when full and open competition procurement methods are used, including reserves.

C. Other Changes

FAR part 2—Definitions of Words and Terms.

• FAR 2.101, Definitions. The proposed rule revises the definition of ''HUBZone contract'' to add awards to HUBZone concerns under a reserve in a solicitation for a multiple-award contract. The proposed rule also adds a definition for the term ''HUBZone order''.

FAR part 4—Administrative Matters.

• FAR 4.803, Contents of contract files. The proposed rule adds a reference to the documentation requirements in new FAR section 19.506.

• FAR 4.1202, Solicitation provision and contract clause. The proposed rule adds the prescription for use of new Alternate I to FAR provision 52.204–8.

FAR part 7—Acquisition Planning.

• FAR 7.105(b)(1), Sources. The proposed rule makes editorial changes.

FAR part 8—Required Sources of Supplies and Services.

• FAR 8.405–5(b), Small business. The change references the discretionary authority that ordering contracting officers have to require a contractor to rerepresent its small business size and socioeconomic status for an individual task or delivery order.

FAR part 9—Contractor Qualifications.

• FAR 9.104–3, Application of standards. The proposed rule revises this subsection to clarify when compliance with the limitations on subcontracting factors into the determination of small business offerors' responsiveness.

FAR part 10—Market Research.

• FAR 10.001, Policy. The proposed rule revises this section to clarify that the results of market research are to be used to determine whether small business programs should be utilized for the acquisition.

• FAR 10.002, Procedures.

○ FAR 10.002(b)(1)(vii). This paragraph has been revised to more clearly require contracting officers to consider small business.

○ FAR 10.002(b)(2)(ix), Procedures. The proposed rule revises the paragraph to include the review of databases such as the System for Award Management database and SBA's Dynamic Small Business Search as another technique for conducting market research.

FAR part 13—Simplified Acquisition Procedures.

• FAR 13.003, Policy. The proposed rule makes revisions to this section to remove an obsolete use of the term ''reserve''.

FAR part 15—Contracting by Negotiation.

• FAR 15.101–3, Tiered evaluation of small business offers. The proposed rule advises that agencies cannot use a tiered evaluation approach during source selection of a multiple-award contract unless the agency has statutory authority to do so.

FAR part 16—Types of Contracts.

• FAR 16.500, Scope of subpart. A reference has been added for set-asides and reserves.

• FAR 16.505, Ordering. References have been added for protests of order set-asides and for the rerepresentation authority.

FAR part 19—Small Business Programs.

• FAR 19.000, Scope of part. Language has been added to specify that part 19 now includes coverage on reserves.

• FAR 19.001, Definitions. The definition of ''nonmanufacturer rule'' is removed, and a definition of ''nonmanufacturer'' is added.

• FAR 19.102, Assignment of North American Industry Classification System codes and small business size standards. The previous coverage regarding the nonmanufacturer rule has been moved from FAR 19.102(f) to FAR 19.505(c) (for HUBZones, see FAR 19.1308). The revisions in this section reflect a combination of guidance that is currently in the FAR and new guidance that has been added to accommodate the assignment of NAICS codes in solicitations that will result in multiple-award contracts, including guidance for assigning NAICS codes in the subsequent task or delivery orders. Contracting officers have the discretion to—

(1) Assign one North American Industry Category System (NAICS) code (and corresponding size standard), to the entire solicitation; or

(2) When the procurement can be divided into portions or categories, assign each a NAICS code and corresponding size standard which best describes the principal purpose attributed to the portion or category. This is authorized for solicitations issued after January 31, 2017.

• FAR 19.103, Appealing the contracting officer's North American Industry Classification. This information has been moved from FAR 19.303.

• FAR subpart 19.2, Policies. Guidance is added on duties of the agency small business specialist.

• FAR subpart 19.3, Representations and rerepresentations.

○ 19.301–1, Representation by the offeror. Paragraph (a) of this subsection has been revised to implement SBA's regulations. These changes underscore SBA's requirements for representing small business size and socioeconomic status by clarifying that the offeror shall represent at the time of its initial offer, which includes price, that—

(1) It meets the size standard for the NAICS code identified in the solicitation; or

(2) It meets the size standard identified in the solicitation for the specific portion or category on which it intends to make an offer. This direction corresponds to FAR 19.101.

Paragraph (c) of this subsection has been revised to clarify that for awards under the HUBZone program, the offeror must also represent its HUBZone status at time of contract award.

Paragraph (d) adds new language to clarify that a business that represents itself as small at the time of its initial offer, either for the entire contract or for each portion or category it submits an offer on, will then be small for each order issued under the contract, or relevant portion or category.

○ FAR 19.301–2, Rerepresentation by a contractor that represented itself as a

small business concern. The following revisions are proposed by this rule:

(1) Clarification of the requirement for a contractor to rerepresent its size and socioeconomic status for an order issued under a multiple-award contract when the contracting officer specifically requires it to do so.

(2) In the case of a multiple-award contract with more than one assigned NAICS code, clarification that the contractor shall rerepresent that it meets the size standard set forth in each relevant category.

(3) Clarification that an order-level rerepresentation does not change the size representation made to the contract.

(4) Clarification that when a contractor rerepresents as a different type of small business than it represented for award (*e.g.,* a HUBZone small business concern rerepresents as a women-owned small business), an agency may take credit for that contract going forward in its small business prime contracting goal achievements consistent with the rerepresentation (*e.g.,* women-owned small business goal instead of HUBZone small business goal).

○ FAR 19.303, Determining North American Industry Classification System codes and size standards. The language currently in this section has been moved to FAR 19.102 and FAR 19.103.

○ FAR 19.307, Protesting a firm's status as a service-disabled veteran-owned small business concern. The proposed language in paragraph (b)(1) was added to bring the FAR into alignment with SBA's regulations at 13 CFR 125.8(b). It clarifies that only the contracting officer or SBA may protest the apparently successful offeror's status as a service-disabled veteran-owned small business when award will be made on a sole-source basis.

○ FAR 19.309, Solicitation provisions and contract clauses. The proposed rule adds the prescription for use of new Alternate II to FAR provision 52.219–1.

• FAR subpart 19.4, Cooperation with the Small Business Administration.

○ FAR 19.401, General. The proposed rule adds language clarifying the appropriate point of contact at the Office of Small Business Programs for DoD.

○ FAR 19.402, Small Business Administration procurement center representatives. The proposed rule adds a reference to SBA's regulations for a complete description of the responsibilities of SBA's procurement center representatives.

• FAR subpart 19.5, Small Business Total Set-Asides, Partial Set-Asides and Reserves. The title of this subpart has been changed to reflect the addition of guidance regarding reserves.

○ FAR 19.501, General. The proposed rule clarifies that reserves may only be used in solicitations that will result in multiple-award contracts and provides the name of the appropriate office in agencies that have cognizance over the agency's small business programs. Paragraph (h) clarifies that small businesses that receive a contract or order as a result of a set-aside or that receive a sole-source award pursuant to the socioeconomic programs identified at FAR subparts 19.8, 19.13, 19.14, or 19.15 shall comply with the limitations on subcontracting and nonmanufacturing rule requirements set forth in the contract. This material previously appeared in the clauses, and now is also being shown in FAR part 19.

○ FAR 19.502, Setting aside acquisitions. Sections have been moved to place all text related to set-asides in one location: FAR 19.502–6 is moved to FAR 19.502–5; FAR 19.503 through FAR 19.507 have been moved to FAR 19.502–6 through FAR 19.502–10, respectively.

○ FAR 19.502–1, Requirements for setting aside acquisitions. The proposed rule updates the text to reflect that Federal Supply Schedule contracts are not ''required sources'' under FAR part 8.

○ FAR 19.502–2, Total small business set-asides. The FAR currently requires that the contracting officer expect offers to be received from two small business concerns offering products of different small business concerns before setting aside an acquisition. This requirement has been revised to remove the expectation that the products of different small businesses will be offered.

The proposed rule moves paragraph (c) of this subsection regarding the nonmanufacturer rule. This guidance is now located in FAR 19.505.

○ FAR 19.502–3, Partial set-asides of contracts other than multiple-award contracts.

(1) The proposed rule clarifies that the contracting officer shall specify in the solicitation how offers will be submitted.

(2) The proposed rule removes cumbersome requirements for awarding and evaluating offers for partial set-asides, such as the requirement for awarding the non-set-aside portion of the solicitation prior to awarding the set-aside portion, and the requirement that the contracting officer will conduct negotiations only with those small business offerors that submitted offers on both the non-set-aside and the set-aside portion of the solicitation.

(3) The proposed rule clarifies that the requirements in this subsection apply to contracts other than multiple-award contracts.

○ FAR 19.502–4. Most of the previous coverage at FAR 19.502–4 has been moved to the different sections which now provide guidance on reserves and order set-asides: FAR sections 19.503 and 19.504. New coverage has been added for partial set-asides of multiple-award contracts.

○ FAR 19.502–5. The previous coverage at FAR 19.502–5(b) has been moved to FAR 19.502–3.

○ FAR 19.503, Reserves. The proposed rule implements the policies and procedures provided in SBA's final rule regarding the use of reserves:

(1) The use of a reserve under a multiple-award contract is discretionary. Nevertheless, the contracting officer should consider using a reserve when neither a total set-aside nor partial set-aside is feasible because—

• There is no reasonable expectation of receiving offers from at least two responsible small business concerns, at a fair market price, for the entire requirement; or

• The requirement cannot be divided into discrete portions or categories, or even if it were possible to divide the requirement, there is still no reasonable expectation of receiving offers from at least two responsible small business concerns able to perform any portion of the requirement at a fair market price.

(2) Paragraph (b) of the proposed rule describes the possible outcomes resulting from solicitations using reserves:

• One or more contract awards to any one or more types of small business.

• In the case of a bundled requirement, an award to one or more Small Business Teaming Arrangements.

○ FAR 19.504, Setting aside orders under multiple-award contracts. The proposed rule revises the FAR to provide guidance for using set-asides of task or delivery orders under a multiple-award contract.

(1) Partial set-asides. Only small business concerns awarded contracts under the partial set-aside may compete for orders for those portions that have been set aside.

(2) Reserves. The contracting officer may set aside orders for small business concerns or, when only one small business award was made under the reserve, may issue orders directly to that contractor.

(3) Orders under full and open, multiple-award contracts. The contracting officer is required to specify in the solicitation whether order set-

asides will be discretionary or mandatory. When setting aside orders under a full and open multiple-award contract, the contracting officer has to comply with the requirements of 19.203(b) and (c).

○ FAR 19.505, Performance of work requirements. The proposed rule consolidates guidance from other areas of the FAR regarding the application of the limitations on subcontracting and the nonmanufacturer rule for contracts and orders. It also clarifies the compliance period for the limitation on subcontracting for contracts that are set aside, in total or in part, and for orders that are set aside. Similar guidance is provided for 8(a), HUBZones, SDVOSBs, and women-owned small businesses in their respective subparts.

○ FAR 19.506, Documentation Requirements. The proposed rule consolidates guidance from other areas of the FAR regarding the documentation requirements that are necessary when a contracting officer does not use a set-aside or reserve.

○ FAR 19.507, Solicitation provisions and contract clauses. The revisions proposed for this section have been made to accommodate the new text in FAR 52.219–14(d), a new alternate for FAR 52.219–13 for multiple-award contracts under which order set-asides will be mandatory, a new clause for reserves under multiple-award contracts, and a new clause for the requirements of the nonmanufacturer rule. In addition, the prescription for the use of the basic clause at FAR 52.219–13 is revised to clarify that it is to be used when orders may be set aside under a multiple-award contract, and a prescription is added for the use of Alternate I of FAR 52.219–13.

• FAR subpart 19.6, Certificates of Competency and Determinations of Responsibility. The proposed rule explains that, for the purposes of receiving a Certificate of Competency (COC) as a nonmanufacturer, the small business may furnish any domestically produced or manufactured product. Language has been added to clarify that a contracting officer is not required to issue an award to a contractor that receives a COC if the reason for not doing so is unrelated to responsibility.

• FAR subpart 19.8, Contracting with the Small Business Administration (The 8(a) Program).

○ FAR 19.804–2, Agency offering. The proposed rule clarifies that agencies are required to notify SBA of multiple-award contracts that are reserved under the 8(a) program.

○ FAR 19.804–6, Indefinite delivery contracts. The proposed rule clarifies that under the 8(a) program, a contracting officer may issue a sole-source task or delivery order as long as the value of the order is equal to or less than the thresholds at FAR 19.805–1(a)(2), the contract was set aside for exclusive competition among 8(a) participants, and the agency goes through offer and acceptance for the order.

○ FAR 19.809–2, Performance of work requirements. The proposed rule clarifies the compliance period for the limitation on subcontracting requirement. In addition, the applicable SBA District Director may permit the 8(a) contractor to exceed the limitations on subcontracting, if it is essential to do so during certain stages of contract performance.

• FAR subpart 19.13, Historically Underutilized Business Zone (HUBZone) Program.

○ FAR 19.1307, Price evaluation preference for HUBZone small business concerns. The proposed rule clarifies that the price evaluation preference for HUBZone small business concerns shall not be used when the solicitation for the multiple-award contract has been reserved for a HUBZone small business concern.

○ FAR 19.1308, Performance of work requirements. The proposed rule clarifies the compliance period for the limitation on subcontracting requirement. In addition, this section includes the HUBZone nonmanufacturer rule, which currently appears within the HUBZone clause.

○ FAR 19.1309 has been amended to consolidate the language regarding the Alternate I version of FAR clauses 52.219–3 and 52.219–4. Language has also been added to direct the contracting workforce to the prescription for the new nonmanufacturer rule clause.

• FAR subpart 19.14, Service-Disabled Veteran-Owned Small Business Procurement Program.

○ FAR 19.1407 Performance of work requirements. The proposed rule clarifies the compliance period for the limitation on subcontracting requirement. In addition, the proposed rule now provides information pertaining to the nonmanufacturer rule in this new location.

• FAR subpart 19.15, Women-Owned Small Business (WOSB) Program.

○ FAR 19.1506, Performance of work requirements. The proposed rule clarifies the compliance period for the limitation on subcontracting requirement. In addition, the proposed rule provides information regarding the nonmanufacturer rule in this location.

FAR part 42—Contract Administration and Audit Services.

• FAR 42.1503, Procedures. The proposed rule clarifies that contractor past performance evaluations are to include compliance with the limitations on subcontracting, as applicable.

FAR part 52—Solicitation Provisions and Contract Clauses.

• FAR 52.204–8, Annual Representations and Certifications. A new Alternate I has been added to allow small businesses to represent their status as a small business for solicitations of multiple-award contracts that have more than one NAICS code assigned.

• FAR 52.212–1, Instructions to Offerors-Commercial Items. Revises the language to refer offerors to the solicitation for the NAICS code(s) and corresponding size standard(s) assigned to the acquisition instead of limiting the location to the Standard Form 1449.

• FAR 52.212–5, Contract Terms and Conditions Required to Implement Statutes or Executive Orders—Commercial Items. Conforming changes have been made to accommodate changes made to existing clauses and the incorporation of two new clauses.

• FAR 52.219–1, Small Business Program Representations. A new Alternate II has been added to allow small businesses to represent their status as a small business for solicitations of multiple-award contracts that have more than one NAICS code assigned.

• FAR 52.219–3, Notice of HUBZone Set-aside or Sole Source Award. Adds a new paragraph (e) to allow contracting officers to identify the appropriate compliance period for the limitation on subcontracting requirement.

• FAR 52.219–4, Notice of Price Evaluation Preference for HUBZone Small Business Concerns. The clause has been revised to exempt solicitations containing a reserve for HUBZone small business concerns from using the price evaluation preference.

• FAR 52.219–6, Notice of Total Small Business Set-Aside. Language relating to the nonmanufacturer rule has been removed, since it will now reside in 52.219–YY.

• FAR 52.219–7, Notice of Partial Small Business Set-Aside. The proposed rule replaces the existing, cumbersome procedures for awarding contracts under the set-aside and non-set-aside portions with the new, more simplified approach. New language has been added for multiple-award contracts to clarify the requirements issuing orders against the set-aside and non-set-aside portions.

• FAR 52.219–13, Notice of Set-Aside of Orders. The clause has been revised to clarify that the basic version is for use when orders may be set aside. In

addition, Alternate I has been created for use when orders will be set aside.

• FAR 52.219–14, Limitations on Subcontracting. The clause has been revised to reflect the changes made at FAR 19.505 to clarify the compliance period for the limitation on subcontracting.

• FAR 52.219–18, Notification Of Competition Limited To Eligible 8(a) Concerns. Language relating to the nonmanufacturer rule has been removed, since it will now reside in FAR 52.219–YY.

• FAR 52.219–27, Notice of Service-Disabled Veteran-Owned Small Business Set-Aside. The clause has been revised to reflect the changes made at FAR 19.1407 to clarify the compliance period for the limitation on subcontracting.

• FAR 52.219–28, Post-Award Small Business Program Rerepresentation. New language has been added to advise small businesses they shall rerepresent their size and socioeconomic status for an order issued under a multiple-award contract when explicitly required by the contracting officer. New language has also been added to allow for small businesses to rerepresent their socioeconomic status (*i.e.,* 8(a), small disadvantaged, HUBZone, service-disabled veteran-owned, women-owned) in addition to size.

• FAR 52.219–29, Notice of Set-Aside for Economically Disadvantaged Women-Owned Small Business Concerns. The clause has been revised to reflect the changes made at FAR 19.1506 to clarify the compliance period for the limitation on subcontracting.

• FAR 52.219–30, Notice of Set-Aside for Women-Owned Small Business Concerns Eligible Under the Women-Owned Small Business Program. The clause has been revised to reflect the changes made at FAR 19.1506 to clarify the compliance period for the limitation on subcontracting.

• In addition, language relating to the nonmanufacturer rule in FAR sections 52.219–3, 52,219–4, 52.219–6, 52.219–7, 52.219–27, 52.219–29, and 52.219–30 has been removed, since it will now reside in the new clause at FAR 52.219–YY.

• FAR 52.219–XX, Notice of Small Business Reserve. This is a new clause to provide notification and guidance to offerors when a solicitation that will result in the award of a multiple-award contract is solicited under full and open procedures, and the contracting officer has provided for a reserve or reserves. The proposed clause provides guidance—

(1) For submitting offers on a reserve to offerors eligible to participate in the reserve; and

(2) Clarifying that the contracting officer may set-aside orders for the small businesses that received awards pursuant to the reserve for small business; or

(3) Clarifying when only one small business concern has received a contract pursuant to a reserve, that the contracting officer may issue orders directly to that small business.

• FAR 52.219–YY, Nonmanufacturer Rule. This new clause is added to provide guidance to offerors regarding the application and requirements of the nonmanufacturer rule.

III. Applicability to Acquisitions Not Greater Than the Simplified Acquisition Threshold, Commercial Items, and Commercial Off-the-Shelf Items

The Federal Acquisition Regulatory Council has made preliminary determinations, in accordance with 41 U.S.C. 1905 and 41 U.S.C. 1906, that the rule will apply to acquisitions under the simplified acquisition threshold (SAT) and acquisitions of commercial items. Discussion of these preliminary determinations is set forth below. The FAR Council will consider public feedback before making a final determination on the scope of the final rule.

The rule will also apply to acquisitions for commercial off-the-shelf (COTS) items. As explained below, no determination is necessary by the FAR Council in connection with applicability to COTS items, because 41 U.S.C. 1907 requires that a law be applied to the acquisition of COTS if the law concerns authorities or responsibilities under the Small Business Act.

A. Applicability to Contracts at or Below the Simplified Acquisition Threshold (SAT)

41 U.S.C. 1905 governs the applicability of laws to acquisitions at or below the SAT. Section 1905 generally limits the applicability of new laws when agencies are making acquisitions at or below the SAT, but provides that such acquisitions will not be exempt from a provision of law if—

• The law contains criminal or civil penalties,

• The law specifically refers to 41 U.S.C. 1905 and states that the law applies to contracts and subcontracts in amounts not greater than the SAT, or

• The Federal Acquisition Regulatory Council makes a written determination and finding that it would not be in the best interest of the Federal Government to exempt contracts and subcontracts in amounts not greater that the SAT from the provision of law.

Section 1331 of the Small Business Jobs Act of 2010 is silent on the applicability of the requirements set forth above to acquisitions at or below the SAT and does not provide for criminal or civil penalties. Therefore, under 41 U.S.C. 1905, section 1331 does not apply to SAT acquisitions unless the FAR Council makes a written determination that such application is in the best interest of the Federal Government.

The FAR Council has made a preliminary determination that applicability of the proposed rule to SAT acquisitions is in the best interest of the government for the following reasons. SAT acquisitions are often well suited for performance by small businesses. While few, if any, multiple-award contracts are likely to be in values under the SAT, a very significant portion of orders made under multiple-award contracts could fall below the SAT. In addition, as a result of current legal and regulatory requirements applicable to contracts other than multiple-award contracts, which call for work below the SAT to be set aside for small businesses, most agency practices are already geared towards taking advantage of this important tool in connection with small dollar purchases to maximize small business participation.

B. Applicability to Contracts for the Acquisition of Commercial Items

41 U.S.C. 1906 governs the applicability of laws to the acquisition of commercial items (other than COTS items). Section 1906 generally limits the applicability of new laws when agencies are acquiring commercial items, but provides that such acquisitions will not be exempt from a provision of law if—

• The law contains criminal or civil penalties;

• The law specifically refers to 41 U.S.C. 1906 and states that the law applies to the acquisition of commercial items; or

• The FAR Council makes a written determination that it is not in the best interest of the Federal Government to exempt the acquisition of commercial items from the provision of law.

Section 1331 of the Small Business Jobs Act of 2010 is silent on the applicability of the requirements set forth above to contracts for commercial items and does not provide for criminal or civil penalties. Therefore, under 41 U.S.C. 1906, section 1331 does not apply to acquisitions for commercial

items unless the FAR Council makes a written determination that such application is in the best interest of the Federal Government.

In making its initial determination of whether application of section 1331 to commercial items is in the best interest of the Federal Government, the FAR Council considered the following factors: (i) The benefits of the policy in furthering Administration goals, (ii) the extent to which the benefits of the policy would be reduced if an exemption is provided for commercial items, and (iii) the burden on contractors if the policy is applied to acquisitions for commercial items.

With respect to the first factor, this Administration has long recognized the important nexus between maximizing small business participation in federal contracting and having effective tools to promote such participation under multiple-award contracts, including the Federal Supply Schedules, through which a significant portion of federal contract spending flows. The Interagency Task Force on Small Business Contracting, created by the President in 2010 to identify meaningful ways to strengthen small business contracting, recommended that rules on set-asides for multiple-award contracts be clarified. In support of its recommendation, the Task Force noted that set-asides accounted for a substantial portion of all small business contract awards yet ''there has been no attempt to create a comprehensive policy for orders placed under either general task-and-delivery-order contracts or schedule contracts that rationalizes and appropriately balances the need for efficiency with the need to maximize opportunities for small businesses.'' Shortly after the Task Force released its recommendations, the President signed the Jobs Act to protect the interests of small businesses and expand their opportunities in the Federal marketplace. In addition, as explained in the Background section of this notice, DOD, GSA, and NASA published an interim rule, with SBA's concurrence, to provide general guidance ahead of SBA providing more specific guidance in its regulations. This action allowed agencies to begin taking advantage of these impactful tools instead of having to wait until more detailed changes were promulgated. In short, the FAR Council believes these tools provide an important benefit in helping agencies to carry out the purposes of the Small Business Act and in helping the government meet its small business contracting goals.

With respect to the second factor (the impact of excluding commercial item acquisitions on the overall benefits of the underlying policy), the FAR Council believes based on an analysis of FPDS data that a significant amount of spending on new contracts is for commercial item acquisitions and a substantial amount of these activities (including all the transactions through the Federal Supply Schedules) are for commercial items, many of which can be performed by small businesses. Denying agencies the ability to apply the authorities in section 1331 to commercial item acquisitions could result in many missed opportunities for capable small business contractors seeking work in the federal marketplace. For these reasons, the FAR Council believes exclusion could have a material negative impact.

With respect to the third factor, burden on contractors selling commercial items, there are no specific systems costs imposed by the rule and reporting costs are minimal (see discussion on the Paperwork Reduction Act under section VI).

Accordingly, for the reasons set forth above, the FAR Council has made a preliminary determination that it is in the best interest of the government to apply section 1331 to commercial item acquisitions.

C. Applicability to Contracts for the Acquisition of COTS Items

41 U.S.C. 1907 governs the applicability of laws to the acquisition of COTS items. Section 1907 generally limits the applicability of new laws when agencies are acquiring COTS items, but provides that such acquisitions will not be exempt from a provision of law if—

- The law contains criminal or civil penalties;
- The law specifically refers to 41 U.S.C. 1907 and states that the law applies to the acquisition of COTS items;
- The law concerns authorities or responsibilities under the Small Business Act or bid procedures; or
- The Administrator for Federal Procurement Policy makes a written determination that it is not in the best interest of the Federal Government to exempt the acquisition of COTS items from the provision of law.

Section 1331 amends section 15 of the Small Business Act (15 U.S.C. 644) to address the use of partial set-asides, order set-asides, and reserves under multiple-award contracts. For this reason, the rule applies to acquisitions of COTS items.

IV. Executive Orders 12866 and 13563

Executive Orders (E.O.s) 12866 and 13563 direct agencies to assess all costs and benefits of available regulatory alternatives and, if regulation is necessary, to select regulatory approaches that maximize net benefits (including potential economic, environmental, public health and safety effects, distributive impacts, and equity). E.O. 13563 emphasizes the importance of quantifying both costs and benefits, of reducing costs, of harmonizing rules, and of promoting flexibility. This is a significant regulatory action and, therefore, was subject to review under Section 6(b) of E.O. 12866, Regulatory Planning and Review, dated September 30, 1993. This rule is not a major rule under 5 U.S.C. 804.

V. Regulatory Flexibility Act

These changes may have a significant economic impact on a substantial number of small entities within the meaning of the Regulatory Flexibility Act 5 U.S.C. 601, *et seq.* The Initial Regulatory Flexibility Analysis (IRFA) is summarized as follows:

DoD, GSA, and NASA are proposing to amend the FAR to provide uniform guidance consistent with SBA's final rule at 78 FR 61114, dated October 2, 2013, which implements section 1331 of the Small Business Jobs Act of 2010 (15 U.S.C. 644(r)). Specifically, this rule proposes to provide regulatory guidance by which Federal agencies may—

(1) Set aside part or parts of multiple-award contracts for small business;

(2) Reserve one or more awards when conducting multiple-award procurements using full and open competition; and

(3) Set aside orders under multiple-award contracts, notwithstanding the fair opportunity requirements.

This rule may have a positive economic impact on any small business entity that wishes to participate in the Federal procurement arena. By providing clarification and additional guidance on the use of the Section 1331 authorities, small businesses are expected to have greater access to multiple-award contracts, including orders issued against such contracts. Analysis of the System for Award Management (SAM) database indicates there are over 304,980 small business registrants that can potentially benefit from this rule.

This rule does not impose any new reporting, recordkeeping or other compliance requirements for small businesses. This rule does not duplicate, overlap, or conflict with any other Federal rules.

The Regulatory Secretariat Division has submitted a copy of the IRFA to the Chief Counsel for Advocacy of the Small Business Administration. A copy of the IRFA may be obtained from the Regulatory Secretariat Division. DoD,

GSA, and NASA invite comments from small business concerns and other interested parties on the expected impact of this rule on small entities.

DoD, GSA, and NASA will also consider comments from small entities concerning the existing regulations in subparts affected by the rule consistent with 5 U.S.C. 610. Interested parties must submit such comments separately and should cite 5 U.S.C. 610 (FAR Case 2014–002), in correspondence.

VI. Paperwork Reduction Act

The Paperwork Reduction Act (44 U.S.C. chapter 35) applies. The proposed rule contains information collection requirements. Accordingly, the Regulatory Secretariat Division has submitted a request for approval to revise existing information collection requirements, in connection with FAR Case 2014–002, Set-Asides under Multiple-Award Contracts, to the Office of Management and Budget.

Based on the proposed revisions to the FAR, an upward adjustment is being made to the number of respondents, responses per respondent, total annual responses, total hours, and the total cost. As a result, the estimated annual reporting burden is being adjusted upward from the estimate in the notice regarding the extension of OMB Clearance 9000–0163, published in the **Federal Register** at 80 FR 25293, on May 4, 2015.

The annual reporting burden is estimated as follows:

(1) Rerepresentation on long-term contracts, and other contracts as a result of acquisitions, mergers, and novations:

Respondents: 1,700.
Responses per respondent: 1.
Total annual responses: 1,700.
Preparation hours per response: .5.
Total response burden hours: 850.
Cost per hour: $31.
Total annual burden: $26,350.

(2) Adjustment to OMB Clearance 9000–0163 for rerepresentation for individual task or delivery orders under multiple-award contracts:

Respondents: 530.
Responses per respondent: 3.
Total annual responses: 1,590.
Preparation hours per response: .5.
Total response burden hours: 795.
Cost per hour: $31.
Total annual burden: $24,645.
Total combined annual burden:
Burden hours: 1,645.
Total Cost: $50,995.

B. Request for Comments Regarding Paperwork Burden

Submit comments, including suggestions for reducing this burden, no later than February 6, 2017 to: FAR Desk Officer, OMB, Room 10102, NEOB, Washington, DC 20503, and a copy to the General Services Administration, Regulatory Secretariat Division (MVCB), ATTN: Ms. Flowers, 1800 F Street NW., 2nd Floor, Washington, DC 20405.

Public comments are particularly invited on: Whether this collection of information is necessary for the proper performance of functions of the FAR, and will have practical utility; whether our estimate of the public burden of this collection of information is accurate, and based on valid assumptions and methodology; ways to enhance the quality, utility, or clarity of the information to be collected; and ways in which we can minimize the burden of the collection of information on those who are to respond, through the use of appropriate technological collection techniques or other forms of information technology.

Requesters may obtain a copy of the supporting statements from the General Services Administration, Regulatory Secretariat Division (MVCB), ATTN: Ms. Flowers, 1800 F Street NW., 2nd Floor, Washington, DC 20405. Please cite OMB Control Number 9000–0163, Small Business Size Representation, in all correspondence.

List of Subjects in 48 CFR Parts 2, 4, 7, 8, 9, 10, 13, 15, 16, 19, 42, and 52

Government procurement.

Dated: November 21, 2016.

William F. Clark,

Director, Office of Governmentwide Acquisition Policy, Office of Acquisition Policy, Office of Governmentwide Policy.

Therefore, DoD, GSA, and NASA are proposing to amend 48 CFR parts 2, 4, 7, 8, 9, 10, 13, 15, 16, 19, 42, and 52 as set forth below:

■ 1. The authority citation for 48 CFR parts 2, 4, 7, 8, 9, 10, 13, 15, 16, 19, 42, and 52 continues to read as follows:

Authority: 40 U.S.C. 121(c); 10 U.S.C. chapter 137; and 51 U.S.C. 20113.

PART 2—DEFINITIONS OF WORDS AND TERMS

■ 2. In section 2.101 amend paragraph (b)(2) by adding to the definition ''HUBZone contract'' paragraph (4); and adding, in alphabetical order, the definition ''HUBZone order'' to read as follows:

2.101 Definitions.

* * * * *

(b) * * *

(2) * * *

HUBZone contract * * *

(4) Awards based on a reserve for HUBZone small business concerns in a solicitation for a multiple-award contract.

HUBZone order means an order set aside for a *HUBZone small business concern* under a multiple-award contract, which had been awarded under full and open competition.

* * * * *

PART 4—ADMINISTRATIVE MATTERS

4.803 [Amended]

■ 3. Amend section 4.803 by removing from paragraph (a)(6) ''decision'' and adding ''decision (see 19.506)'' in its place.

■ 4. Amend section 4.1202 by revising the introductory text of paragraph (a) and paragraph (a)(12) to read as follows:

4.1202 Solicitation provision and contract clause.

(a) Except for commercial item solicitations issued under FAR part 12, insert in solicitations the provision at 52.204–8, Annual Representations and Certifications. The contracting officer shall check the applicable provisions at 52.204–8(c)(2). Use the provision with its Alternate I in solicitations that will result in a multiple-award contract with more than one North American Industry Classification System code assigned; this is authorized for solicitations issued after January 1, 2017 (see 19.102(b)). When the provision at 52.204–7, System for Award Management, is included in the solicitation, do not include the following representations and certifications:

* * *

(12) 52.219–1, Small Business Program Representation (Basic, Alternates I, and II).

PART 7—ACQUISITION PLANNING

■ 5. Amend section 7.104 by revising the first sentence of paragraph (d)(1) to read as follows:

7.104 General procedures.

* * * * *

(d)(1) The planner shall coordinate the acquisition plan or strategy with the cognizant small business specialist when the strategy contemplates an acquisition meeting the dollar amounts in paragraph (d)(2) of this section unless the contract or order is set-aside, in total or in part, for small business under part 19. * * *

■ 6. Amend section 7.105 by revising the introductory text of paragraph (b) and paragraph (b)(1) to read as follows:

7.105 Contents of written acquisition plans

* * * * *

(b) *Plan of action.* (1) *Sources.* Indicate the prospective sources of

supplies or services that can meet the need. Consider required sources of supplies or services (see Part 8) and sources identifiable through databases including the Governmentwide database of contracts and other procurement instruments intended for use by multiple agencies available at *https://www.contractdirectory.gov/contractdirectory/*. Include consideration of small business, veteran-owned small business, service-disabled veteran-owned small business, HUBZone small business, small disadvantaged business, and women-owned small business concerns (see part 19). Also, include consideration of the impact of any bundling that might affect small business participation in the acquisition (see 7.107) (15 U.S.C. 644(e)). When the proposed acquisition strategy involves bundling, identify the incumbent contractors and contracts affected by the bundling. Address the extent and results of the market research and indicate their impact on the various elements of the plan (see part 10).

* * * * *

PART 8—REQUIRED SOURCES OF SUPPLIES AND SERVICES

■ 7. Amend section 8.405–5 by removing from paragraph (b) ''against'' and adding ''under'' in its place and revising the last sentence to read as follows:

8.405–5 Small business.

* * * * *

(b) * * * Ordering activities should rely on the small business representations made by schedule contractors at the contract level (but see section 19.301–2(b)(4) concerning re-representation for an order).

* * * * *

PART 9—CONTRACTOR QUALIFICATIONS

■ 8. Amend section 9.104–3 by revising paragraph (d)(2) to read as follows:

9.104–3 Application of standards.

* * * * *

(d) * * *

(2) A small business that is unable to comply with the limitations on subcontracting may be considered nonresponsible (see 52.219–3 Notice of HUBZone Set-Aside or Sole Source Award, 52.219–4 Notice of Price Evaluation Preference for HUBZone Small Business Concerns, 52.219–14 Limitations on Subcontracting, 52.219–27 Notice of Service-Disabled Veteran-Owned Small Business Set-Aside, 52.219–29 Notice of Set-Aside for, or Sole Source Award to, Economically Disadvantaged Women-Owned Small Business Concerns, 52.219–30 Notice of Set-Aside for, or Sole Source Award to, Women-Owned Small Business Concerns Eligible Under the Women-Owned Small Business Program). A small business that has not agreed to comply with the limitations on subcontracting may be considered nonresponsive.

PART 10—MARKET RESEARCH

■ 9. Amend section 10.001 by—

■ a. Removing from paragraph (a)(3)(v) ''and'';

■ b. Removing the period from paragraph (a)(3)(vi) and adding a semicolon in its place;

■ c. Redesignating paragraph (a)(3)(vii) as paragraph (a)(3)(viii);

■ d. Adding paragraph (a)(3)(vii); and

■ e. Removing from newly designated paragraph (a)(3)(viii) ''Subpart 39.2'' and adding ''subpart 39.2'' in its place.

The addition to read as follows:

10.001 Policy.

(a) * * *

(3) * * *

(vii) Determine whether the acquisition should utilize any of the small business programs in accordance with part 19; and

* * * * *

■ 10. Amend section 10.002 by revising paragraph (b)(1)(vii); and adding paragraph (b)(2)(ix).

The addition and revision to read as follows:

10.002 Procedures.

* * * * *

(b) * * *

(1) * * *

(vii) Whether the Government's needs can be met by small business concerns that will likely submit a competitive offer at fair market prices (see part 19).

(2) * * *

(ix) Reviewing databases such as the System for Award Management (SAM) and the SBA's Dynamic Small Business Search (DSBS).

* * * * *

PART 13—SIMPLIFIED ACQUISITION PROCEDURES

■ 11. Amend section 13.003 by revising paragraph (b)(1) to read as follows:

13.003 Policy.

* * * * *

(b)(1) Acquisitions of supplies or services that have an anticipated dollar value exceeding $3,500 ($20,000 for acquisitions as described in 13.201(g)(1)) but not exceeding $150,000 ($300,000 for acquisitions described in paragraph (1)(i) of the simplified acquisition threshold definition at 2.101) shall be set aside for small business concerns (see 19.000, 19.203, and subpart 19.5).

* * * * *

PART 15—CONTRACTING BY NEGOTIATION

15.101–3 [Added]

■ 12. Add section 15.101–3 to read as follows:

15.101–3 Tiered evaluation of small business offers.

An agency cannot create a tiered (or ''cascading'') evaluation of offers, as described in 13 CFR 125.2, for multiple-award contracts unless an agency has statutory authority.

PART 16—TYPES OF CONTRACTS

■ 13. Amend section 16.500 by adding paragraph (e) to read as follows:

16.500 Scope of subpart.

* * * * *

(e) See subpart 19.5 for procedures to set aside part or parts of multiple-award contracts for small business; to reserve one or more awards for small business on multiple-award contracts; and to set aside orders for small businesses under multiple-award contracts.

■ 14. Amend section 16.505 by

■ a. Adding paragraph (a)(10)(iii);

■ b. Removing from the end of the introductory text of paragraph (b) ''contracts—'' and adding ''contracts.'' in its place;

■ c. Revising paragraph (b)(4);

■ d. Revising the heading of paragraph (b)(6); and

■ e. Adding paragraph (b)(9).

The addition and revisions to read as follows:

16.505 Ordering.

(a) * * *

(10) * * *

(iii) For protests of small business size status for set-aside orders, see 19.302.

* * * * *

(b) * * *

(4) For additional requirements for cost-reimbursement orders, see 16.301–3.

* * * * *

(6) *Postaward notices and debriefing of awardees for orders exceeding $5 million.* * * *

* * * * *

(9) *Small business.* The contracting officer should rely on the small business representations at the contract level (but see section 19.301–2(b)(4) for order rerepresentations).

* * * * *

PART 19—SMALL BUSINESS PROGRAMS

■ 15. Amend section 19.000 by—
■ a. Removing from paragraph (a)(3) ''aside'' and adding ''aside, in total or in part,'' in its place;
■ b. Removing from paragraph (a)(8) ''and'';
■ c. Removing from paragraph (a)(9) ''Program.'' and adding ''Program; and'' in its place; and
■ d. Adding paragraph (a)(10).
The addition to read as follows:

19.000 Scope of part.

(a) * * *

(10) The use of reserves.

* * * * *

■ 16. Amend section 19.001 by removing the definition ''Nonmanufacturer rule'' and adding, in alphabetical order, the definition ''Nonmanufacturer'' to read as follows:

19.001 Definitions.

* * * * *

Nonmanufacturer means a concern that furnishes a product it did not manufacture or produce (see 13 CFR 121.406).

■ 17. Revise section 19.102 to read as follows:

19.102 Small business size standards and North American Industry Classification System codes.

(a) *Locating size standards and North American Industry Classification System codes.* (1) SBA establishes small business size standards on an industry-by-industry basis. Small business size standards and corresponding North American Industry Classification System (NAICS) codes are provided at 13 CFR 121.201. They are also available at *http://www.sba.gov/content/table-small-business-size-standards.*

(2) NAICS codes are updated by the Office of Management and Budget through its Economic Classification Policy Committee every five years. New NAICS codes are not available for use in Federal contracting until SBA publishes corresponding size standards. NAICS codes are available from the U.S. Census Bureau at *http://www.census.gov/eos/www/naics/.*

(b) *Determining the appropriate NAICS codes for the solicitation.* (1) The contracting officer shall determine the appropriate NAICS code by classifying the product or service being acquired in the one industry which best describes the principal purpose of the supply or service being acquired. Primary consideration is given to the industry descriptions in the U.S. NAICS Manual, the product or service descriptions in the solicitation, the relative value and importance of the components of the requirement making up the end item being procured, and the function of the goods or services being purchased. A procurement is usually classified according to the component which accounts for the greatest percentage of contract value.

(2)(i) For solicitations issued on or before January 31, 2017 that will result in multiple-award contracts, the contracting officer shall assign a NAICS code in accordance with paragraph (b)(1) of this section.

(ii) For solicitations issued after January 31, 2017 that will result in multiple-award contracts, the contracting officer shall—

(A) Assign a single NAICS code (and corresponding size standard) which best describes the principal purpose of the acquisition and will also best describe the principal purpose of each subsequent order; or

(B) Divide the acquisition into distinct portions or categories (*e.g.,* Line Item Numbers (LINs), Special Item Numbers (SINs), Sectors, Functional Areas (FAs), or equivalent) and assign each portion or category a single NAICS code and size standard which best describes the principal purpose of the supplies or services to be acquired under that distinct portion or category.

(3)(i) When placing orders under multiple-award contracts whose solicitations were issued on or before January 31, 2017, the contracting officer shall assign the order the same NAICS code and corresponding size standard designated in the contract.

(ii) When placing orders under multiple-award contracts whose solicitations were issued after January 31, 2017, the contracting officer shall—

(A) Assign the order the same NAICS code and corresponding size standard designated in the contract when conditions in (b)(2)(ii)(A) are met; or

(B) Assign the order the NAICS code and corresponding size standard designated for the distinct portion or category designated in the contract when conditions in (b)(2)(ii)(B) are met. If an order covers multiple portions or categories, select the NAICS code and corresponding size standard which best represents the principal purpose of the order.

(4) The contracting officer's designation is final. Appeal procedures can be found in 19.103.

(c) *Application of small business size standards to solicitations.*

(1) The contracting officer shall apply the size standard in effect on the date the solicitation is issued.

(2) The contracting officer may amend the solicitation and use the new size standard if SBA amends the size standard and it becomes effective before the due date for receipt of initial offers.

■ 18. Add section 19.103 to read as follows:

19.103 Appealing the contracting officer's North American Industry Classification System code and size standard determination.

(a) The contracting officer's determination is final unless appealed as follows:

(1) An appeal from a contracting officer's NAICS code designation and the applicable size standard shall be served and filed within 10 calendar days after the issuance of the initial solicitation or any amendment affecting the NAICS code or size standard. However, SBA may file a NAICS code appeal at any time before offers are due.

(2) Appeals from a contracting officer's NAICS code designation or applicable size standard may be filed with SBA's Office of Hearings and Appeals (OHA) by—

(i) Any person adversely affected by a NAICS code designation or applicable size standard. However, with respect to a particular sole source 8(a) contract, only the SBA Associate Administrator for Business Development may appeal a NAICS code designation; or

(ii) The Associate or Assistant Director for the SBA program involved, through SBA's Office of General Counsel.

(3) Contracting officers shall advise the public, by amendment to the solicitation, of the existence of a NAICS code appeal (see 5.102(a)(1)). Such notices shall include the procedures and the deadline for interested parties to file and serve arguments concerning the appeal.

(4) SBA's OHA will dismiss summarily an untimely NAICS code appeal.

(5)(i) The appeal petition must be in writing and must be addressed to the Office of Hearings and Appeals, Small Business Administration, Suite 5900, 409 3rd Street SW., Washington, DC 20416.

(ii) There is no required format for the appeal; however, the appeal must include—

(A) The solicitation or contract number and the name, address, email address, and telephone number of the contracting officer;

(B) A full and specific statement as to why the NAICS code designation is allegedly erroneous and argument supporting the allegation; and

(C) The name, address, telephone number, and signature of the appellant or its attorney.

(6) The appellant must serve the appeal petition upon—

(i) The contracting officer who assigned the NAICS code to the acquisition; and

(ii) SBA's Office of General Counsel, Associate General Counsel for Procurement Law, 409 3rd Street SW., Washington, DC 20416, facsimile 202–205–6873, or email at *OPLService@sba.gov.*

(7) Upon receipt of a NAICS code appeal, OHA will notify the contracting officer by a notice and order of the date OHA received the appeal, the docket number, and the Administrative Judge assigned to the case. The contracting officer's response to the appeal, if any, must include argument and evidence (see 13 CFR part 134), and must be received by OHA within 15 calendar days from the date of the docketing notice and order, unless otherwise specified by the Administrative Judge. Upon receipt of OHA's docketing notice and order, the contracting officer must withhold award, unless withholding award is not in the best interests of the Government, and immediately send to OHA an electronic link to or a paper copy of both the original solicitation and all amendments relating to the NAICS code appeal. The contracting officer shall inform OHA of any amendments, actions, or developments concerning the procurement in question.

(8) After close of record, OHA will issue a decision and inform the contracting officer. If OHA's decision is received by the contracting officer before the date the offers are due, the decision shall be final and the solicitation must be amended to reflect the decision, if appropriate. OHA's decision received after the due date of the initial offers shall not apply to the pending solicitation but shall apply to future solicitations of the same products or services.

(b) SBA's regulations concerning appeals of NAICS code designations are found at 13 CFR 121.1101 to 121.1103 and 13 CFR part 134.

■ 19. Amend section 19.201 by—

■ a. In paragraph (c), revising the second sentence of the introductory text of the paragraph;

■ b. Removing from paragraph (c)(1) ''Director of'' wherever it appears and adding ''Director of the Office of'' in its place;

■ c. Revising paragraph (c)(3) and the introductory text of (c)(5); and

■ d. Revising paragraph (d).

The revised text reads as follows:

19.201 General policy.

* * * * *

(c) * * * For the Department of Defense, in accordance with 10 U.S.C. 144 note, the Office of Small and Disadvantaged Business Utilization has been redesignated as the Office of Small Business Programs. * * *

(3) Be responsible to and report directly to the agency head or the deputy to the agency head (except that for the Department of Defense, the Director of the Office of Small Business Programs reports to the Secretary or the Secretary's designee);

* * * * *

(5) Work with the SBA procurement center representative (PCR) (or, if a PCR is not assigned, see 19.402(a)) to—

* * * * *

(d) Small business specialists shall be appointed and act in accordance with agency regulations.

(1) The contracting activity shall coordinate with the small business specialist as early in the acquisition planning process as practicable, but no later than 30 days before the issuance of a solicitation, or prior to placing an order without a solicitation when the acquisition meets the dollar thresholds set forth at 7.104(d)(2).

(2) The small business specialist shall notify the agency's Director of the Office of Small and Disadvantaged Utilization, and for the Department of Defense, the Director of the Office of Small Business Programs, when the criteria relating to substantial bundling at 7.104(d)(2) are met.

(3) The small business specialist shall coordinate with the contracting activity and the SBA PCR on all determinations and findings required by 7.107 for consolidation or bundling of contract requirements.

■ 20. Revise section 19.202 to read as follows:

19.202 Specific policies.

In order to further the policy in 19.201(a), contracting officers shall comply with the specific policies listed in this section and shall consider recommendations of the agency Director of the Office of Small and Disadvantaged Business Utilization, or for the Department of Defense, the Director of the Office of Small Business Programs, or the Director's designee, as to whether a particular acquisition should be awarded under subpart 19.5, 19.8, 19.13, 19.14, or 19.15. Agencies shall establish procedures including dollar thresholds for review of acquisitions by the Director or the Director's designee for the purpose of making these recommendations. The contracting officer shall document the contract file whenever the Director's recommendations are not accepted, in accordance with 19.506.

■ 21. Amend section 19.202–1 by revising the introductory text of paragraph (e)(1) and removing from paragraph (e)(4) ''19.505'' and adding ''19.502–8'' in its place. The revision reads as follows:

19.202–1 Encouraging small business participation in acquisitions.

* * * * *

(e)(1) Provide a copy of the proposed acquisition package and other reasonably obtainable information related to the acquisition, to the SBA PCR (or, if a PCR is not assigned, see 19.402(a)) at least 30 days prior to the issuance of the solicitation if—

* * * * *

■ 22. Amend section 19.202–2 by removing from the introductory paragraph ''must'' and adding ''shall'' in its place and revising paragraph (a) to read as follows:

19.202–2 Locating small business sources.

* * * * *

(a) Before issuing solicitations, make every reasonable effort to find additional small business concerns (see 10.002(b)(2)). This effort should include contacting the agency small business specialist and SBA PCR (or, if a PCR is not assigned, see 19.402(a))

* * * * *

19.202–4 [Amended]

■ 23. Amend section 19.202–4 by removing from the introductory paragraph ''must'' and adding ''shall'' in its place; and removing from paragraph (c) ''bid sets and specifications'' and adding ''solicitations'' in its place.

■ 24. Amend section 19.202–5 by removing from the introductory paragraph ''must'' and adding ''shall'' in its place and revising paragraph (c)(1) to read as follows:

19.202–5 Data collection and reporting requirements.

* * * * *

(c) * * *

(1) Require a contractor that represented itself as any of the small business concerns identified in 19.000(a)(3) prior to award of the contract to rerepresent its size and socioeconomic status (*i.e.,* 8(a), small disadvantaged business, HUBZone small business, service-disabled veteran-owned small business, or women-owned small business status); and

* * * * *

19.202–6 [Amended]

■ 25. Amend section 19.202–6 by removing from paragraph (a)(1) ''set-asides'' and adding ''set-asides, and reserves''.

19.203 [Amended]

■ 26. Amend section 19.203 by removing from paragraph (b) ''exclusively reserve'' and adding ''set aside'' in its place.

■ 27. Amend section 19.301–1 by—

■ a. Revising paragraph (a);

■ b. Redesignating paragraphs (b) through (d) as paragraphs (e) through (g); and

■ c. Adding new paragraphs (b) through (d).

The revision and additions read as follows:

19.301–1 Representation by the offeror.

(a) To be eligible for award as a small business concern identified in 19.000(a)(3), an offeror is required to represent in good faith—

(1)(i) That it meets the small business size standard corresponding to the North American Industry Classification Systems (NAICS) code identified in the solicitation; or

(ii) For a multiple-award contract where there is more than one NAICS code assigned, that it meets the small business size standard set forth for each distinct portion or category (*e.g.* Line Item Numbers (LINs), Special Item Numbers (SINs), Sectors, Functional Areas (FAs), or the equivalent) for which it submits an offer. If the small business concern submits an offer for the entire multiple-award contract, it must meet the size standard for each distinct portion or category (*e.g.* LIN, SIN, Sector, FA, or equivalent); and

(2) The Small Business Administration (SBA) has not issued a written determination stating otherwise pursuant to 13 CFR 121.1009.

(b) An offeror is required to represent its size and socioeconomic status in writing to the contracting officer at the time of initial offer, including offers for Basic Ordering Agreements, and Blanket Purchase Agreements (BPAs), except for BPAs issued under a multiple award schedule contract pursuant to subpart 8.4.

(c) To be eligible for an award under the HUBZone Program (see subpart 19.13), a HUBZone small business concern must represent its size and socioeconomic status at the time of initial offer and at the time of contract award.

(d) *Multiple-award contract representations.*

(1) A business that represents as a small business concern at the time of its initial offer for the contract is considered a small business concern for each order issued under the contract (but see 19.301–2 for rerepresentations).

(2) A business that represents as a small business concern at the time of its initial offer for a distinct portion or category as set forth in paragraph (a)(2) is considered a small business concern for each order issued under that distinct portion or category (but see 19.301–2 for rerepresentations).

* * * * *

■ 28. Amend section 19.301–2 by—

■ a. Revising the introductory text of paragraph (b);

■ b. Removing the period from the end of paragraph (b)(1) and adding a semicolon in its place;

■ c. Revising paragraph (b)(2);

■ d. Removing from paragraph (b)(3)(ii) ''thereafter.'' and adding ''thereafter; or'' in its place;

■ e. Adding paragraph (b)(4); and

■ f. Revising paragraphs (c) and (d).

The revisions and addition read as follows:

19.301–2 Rerepresentation by a contractor that represented itself as a small business concern.

* * * * *

(b) A contractor that represented itself as any of the small business concerns identified in 19.000(a)(3) before contract award is required to rerepresent its size and socioeconomic status for the NAICS code in the contract—

* * * * *

(2) Within 30 days after a merger or acquisition (whether the contractor acquires or is acquired by another company) of the contractor that does not require novation or within 30 days after modification of the contract to include the clause at FAR 52.219–28, Post-Award Small Business Program Rerepresentation, if the merger or acquisition occurred prior to inclusion of this clause in the contract;

* * * * *

(4) If the contracting officer requires contractors to rerepresent their size and socioeconomic status for an order issued under a multiple-award contract.

(c) A contractor is required to rerepresent its size status in accordance with the size standard in effect at the time of its rerepresentation that corresponds to the NAICS code that was initially assigned to the contract. For multiple-award contracts where there is more than one NAICS code assigned, the contractor is required to rerepresent whether it meets the small business size standard set forth for each distinct category or portion (*e.g.,* LINs, SINS, Sectors, FAs, or the equivalent) for which the contractor had previously represented.

(d)(1) *Contract rerepresentation.* When a contractor rerepresents for a contract that it no longer qualifies as a small business concern identified in 19.000(a)(3) in accordance with FAR 52.219–28, the agency may no longer include the value of options exercised, modifications issued, orders issued, or purchases made under BPAs on that contract in its small business prime contracting goal achievements. When a contractor's rerepresentation for a contract qualifies it as a different small business concern identified in 19.000(a)(3) than what it represented for award, the agency may include the value of options exercised, modifications issued, orders issued, or purchases made under BPAs on that contract in its small business prime contracting goal achievements, consistent with the rerepresentation. Agencies should issue a modification to the contract capturing the rerepresentation and report it to FPDS within 30 days after notification of the rerepresentation.

(2) *Rerepresentation for an order.* When a contractor rerepresents for an order that it no longer qualifies as a small business concern identified in 19.000(a)(3), the agency cannot include the value of the order in its small business prime contracting goal achievements. When a contractor's rerepresentation for an order qualifies it as a different small business concern identified in 19.000(a)(3) than what it represented for contract award, the agency can include the value of the order in its small business prime contracting goal achievement, consistent with the rerepresentation. A rerepresentation for an order does not change the size or socioeconomic status representation for the contract.

* * * * *

■ 29. Amend section 19.302 by revising paragraphs (a), (b), and (d)(1)(ii) to read as follows:

19.302 Protesting a small business representation or rerepresentation.

(a)(1) The SBA regulations on small business size and size protests are found at 13 CFR part 121.

(2) An offeror, the contracting officer, SBA, or another interested party may protest the small business representation of an offeror in a specific offer for a contract. However, for competitive 8(a) contracts, the filing of a protest is limited to an offeror, the contracting officer, or the SBA.

(b) Any time after offers are received by the contracting officer, or in the case of bids, opened, the contracting officer

may question the small business representation of any offeror in a specific offer by filing a contracting officer's protest (see paragraph (c) of this section).

* * * * *

(d) * * *

(1) * * *

(ii) A protest may be made in writing if it is delivered to the contracting officer by hand, telegram, mail, facsimile, email, express or overnight delivery service or letter postmarked within the 5-day period.

* * * * *

19.303 [Reserved]

■ 30. Remove and reserve section 19.303.

■ 31. Amend section 19.307 by revising paragraph (b)(1) to read as follows:

19.307 Protesting a firm's status as a service-disabled veteran-owned small business concern.

* * * * *

(b)(1) For sole source acquisitions, the contracting officer or SBA may protest the apparently successful offeror's service-disabled veteran-owned small business status. For all other acquisitions, any interested party (see 13 CFR 125.8(b)) may protest the apparently successful offeror's service-disabled veteran-owned small business status.

* * * * *

■ 32. Amend section 19.309 by adding paragraph (a)(3) to read as follows:

19.309 Solicitation provisions and contract clauses.

(a)(1) * * *

(3) Use the provision with its Alternate II in solicitations that will result in a multiple-award contract with more than one NAICS code assigned. This is authorized for solicitations issued after January 31, 2017 (see 19.102(b)).

■ 33. Amend section 19.401 by revising paragraph (b) to read as follows:

19.401 General.

* * * * *

(b) The Director of the Office of Small and Disadvantaged Business Utilization serves as the agency focal point for interfacing with SBA. The Director of the Office of Small Business Programs is the agency focal point for the Department of Defense.

■ 34. Amend section 19.402 by revising paragraphs (a)(1), (a)(2), (b), and the introductory text to paragraph (c) to read as follows:

19.402 Small Business Administration procurement center representatives.

(a)(1) The SBA may assign one or more procurement center representatives (PCR) to any contracting activity or contract administration office to carry out SBA policies and programs. Assigned SBA PCRs are required to comply with the contracting agency's directives governing the conduct of contracting personnel and the release of contract information. The SBA must obtain for its PCRs security clearances required by the contracting agency.

(2) If an SBA PCR is not assigned to the procuring activity or contract administration office, contact the SBA Office of Government Contracting Area Office serving the area in which the procuring activity is located for assistance in carrying out SBA policies and programs. See *http://www.sba.gov/content/procurement-center-representatives* for the location of the SBA office servicing the activity.

(b) Upon their request and subject to applicable acquisition and security regulations, contracting officers shall give SBA PCRs (or, if a PCR is not assigned, see paragraph (a) of this section) access to all reasonably obtainable contract information that is directly pertinent to their official duties.

(c) The duties assigned by SBA to its PCR are set forth at 13 CFR 125.2(b) and include but are not limited to the following:

* * * * *

19.403 [Amended]

■ 35. Amend section 19.403 by removing from paragraph (c)(8) ''at 19.505'' and adding ''at 19.502–8'' in its place.

■ 36. Revise the heading of subpart 19.5 to read as follows:

Subpart 19.5 Small Business Total Set-Asides, Partial Set-Asides, and Reserves

■ 37. Revise section 19.501 to read as follows:

19.501 General.

(a)(1) The purpose of small business set-asides is to award certain acquisitions exclusively to small business concerns. A ''set-aside for small business'' is the limiting of an acquisition exclusively for participation by small business concerns. A small business set-aside may be open to any of the small business concerns identified at 19.000(a)(3). A small business set-aside of a single acquisition or a class of acquisitions may be total or partial.

(2) The purpose of a small business reserve is to award one or more contracts to any of the small business concerns identified at 19.000(a)(3), under a full and open competition that will result in a multiple-award contract. A small business reserve shall not be used when the acquisition can be set aside, in total or in part.

(b) The contracting officer makes the determination to make a small business set-aside, in total or in part, or a reserve. The Small Business Administration (SBA) PCR (or, if a PCR is not assigned, see 19.402(a)) may make a recommendation to the contracting officer.

(c) The contracting officer shall review acquisitions to determine if they can be set aside, in total or in part, or reserved, for small business, giving consideration to the recommendations of agency personnel in the Office of Small and Disadvantaged Business Utilization, or for the Department of Defense, in the Office of Small Business Programs. Agencies may establish threshold levels for this review depending upon their needs.

(d) At the request of an SBA PCR, (or, if a PCR is not assigned, see 19.402(a)) the contracting officer shall make available for review at the contracting office (to the extent of the SBA representative's security clearance) all proposed acquisitions in excess of the micro-purchase threshold that have not been unilaterally set aside for small business.

(e) To the extent practicable, unilateral determinations initiated by a contracting officer shall be used as the basis for small business set-asides, in total or in part, or reserves, rather than joint determinations by an SBA PCR and a contracting officer.

(f) All solicitations involving set-asides, in total or in part, or reserves, shall] specify the NAICS code(s) and corresponding size standard(s) (see 19.102).

(g) Except as authorized by law, a contract may not be awarded as a result of a small business set-aside if the cost to the awarding agency exceeds the fair market price.

(h) The performance of work requirements (*i.e.,* limitations on subcontracting and the nonmanufacturer rule) apply to small business set-asides, in total or in part, sole source awards made pursuant to subparts 19.8, 19.13, 19.14, and 19.15, and orders that are set aside (see 19.505).

■ 38. Amend section 19.502–1 by removing from paragraph (a)(2) ''industry category'' and adding ''industry'' in its place; and revising paragraph (b) to read as follows:

19.502–1 Requirements for setting aside acquisitions.

* * * * *

(b) This requirement does not apply to purchases of $3,500 or less ($20,000 or less for acquisitions as described in 13.201(g)(1)), or purchases from required sources under part 8 (*e.g.,* Committee for Purchase From People Who are Blind or Severely Disabled).

■ 39. Amend section 19.502–2 by revising paragraphs (a), (b)(1), and (b)(2); and removing paragraph (c) to read as follows:

19.502–2 Total small business set-asides.

(a) Before setting aside an acquisition under this paragraph, refer to 19.203(b). Each acquisition of supplies or services that has an anticipated dollar value exceeding $3,500 ($20,000 for acquisitions as described in 13.201(g)(1)), but not over $150,000 ($300,000 for acquisitions described in paragraph (1)(i) of the Simplified Acquisition Threshold definition at 2.101), shall be set aside for small business unless the contracting officer determines there is not a reasonable expectation of obtaining offers from two or more responsible small business concerns that are competitive in terms of fair market prices, quality, and delivery. If the contracting officer receives only one acceptable offer from a responsible small business concern in response to a set-aside, the contracting officer should make an award to that firm. If the contracting officer receives no acceptable offers from responsible small business concerns, the set-aside shall be withdrawn and the requirement, if still valid, shall be resolicited on an unrestricted basis. The small business set-aside does not preclude the award of a contract as described in 19.203.

(b) * * *

(1) Offers will be obtained from at least two responsible small business concerns; and

(2) Award will be made at fair market prices. Total small business set-asides shall not be made unless such a reasonable expectation exists (see 19.502–3 for partial set-asides). Although past acquisition history and market research of an item or similar items are always important, these are not the only factors to be considered in determining whether a reasonable expectation exists. In making R&D small business set-asides, there must also be a reasonable expectation of obtaining from small businesses the best scientific and technological sources consistent with the demands of the proposed acquisition for the best mix of cost, performances, and schedules.

■ 40. Revise section 19.502–3 to read as follows:

19.502–3 Partial set-asides of contracts other than multiple-award contracts.

(a) The contracting officer shall set aside a portion or portions of an acquisition, except for construction, for exclusive small business participation when—

(1) Market research indicates that a total set-aside is not appropriate (see 19.502–2);

(2) The requirement can be divided into distinct portions or categories (*e.g.,* Line Item Numbers (LINs), Special Item Numbers (SINs), Sectors, Functional Areas (FAs), or equivalent);

(3) The acquisition is not subject to simplified acquisition procedures;

(4) Two or more responsible small business concerns are expected to submit an offer on the set-aside portion or portions of the acquisition at a fair market price;

(5) The specific program eligibility requirements identified in this part apply; and

(6) The solicitation will result in a contract other than a multiple-award contract (see 2.101 for definition of multiple-award contract.

(b) When the contracting officer determines that a requirement is to be partially set aside, the solicitation shall identify which portion or portions are set aside and not set aside.

(c) The contracting officer shall specify in the solicitation how offers shall be submitted with regards to the set-aside and non-set-aside portions.

(d) Offers received from concerns that do not qualify as small business concerns shall be considered nonresponsive and shall be rejected on the set-aside portion of partial set-asides. However, before rejecting an offer otherwise eligible for award because of questions concerning the size representation, an SBA determination must be obtained (see subpart 19.3).

■ 41. Revise section 19.502–4 to read as follows:

19.502–4 Partial set-asides of multiple-award contracts.

(a) In accordance with section 1331 of Public Law 111–240 (15 U.S.C. 644(r)(1)), the contracting officer may set aside a portion or portions of a multiple-award contract, except for construction, for any of the small business concerns identified at 19.000(a)(3) when—

(1) Market research indicates that a total set-aside is not appropriate (see 19.502–2);

(2) The requirement can be divided into distinct portions or categories (*e.g.,* Line Item Numbers (LINs), Special Item Numbers (SINs), Sectors, Functional Areas (FAs), or equivalent);

(3) The acquisition is not subject to simplified acquisition procedures;

(4) Two or more responsible small business concerns are expected to submit an offer on the set-aside portion or portions of the acquisition at a fair market price; and

(5) The specific program eligibility requirements identified in this part apply.

(b) When the contracting officer determines that a requirement is to be partially set aside, the solicitation shall identify which portion or portions are set aside and not set aside.

(c) The contracting officer shall specify in the solicitation how offers shall be submitted with regards to the set-aside and non-set-aside portions.

(d) Offers received from concerns that do not qualify as small business concerns shall be considered nonresponsive and shall be rejected on the set-aside portion of partial set-asides. However, before rejecting an offer otherwise eligible for award because of questions concerning the size representation, an SBA determination must be obtained (see subpart 19.3).

19.502–5 [Removed]

■ 42. Remove section 19.502–5.

19.502–6 [Redesignated as 19.502–5]

■ 43. Redesignate section 19.502–6 as section 19.502–5 and revise the heading to read as follows:

19.502–5 Insufficient reasons for not setting aside an acquisition.

19.503 thru 19.507 [Redesignated as 19.502–6 thru 19.502–10]

■ 44. Redesignate sections 19.503 through 19.507 as sections 19.502–6 through 19.502–10.

■ 45. Amend newly designated section 19.502–8 by—

■ a. Revising paragraph (a); and

■ b. Removing from paragraph (b) ''procurement center representative'' wherever it appears and adding ''PCR'' in its place.

The revision to read as follows:

19.502–8 Rejecting Small Business Administration recommendations.

(a) If the contracting officer rejects a recommendation of the SBA, written notice shall be furnished to the appropriate SBA representative within 5 working days of the contracting officer's receipt of the recommendation.

■ 46. Amend newly designated section 19.502–9 by revising paragraph (a); and removing from paragraph (b) ''SBA representative'' and ''procurement

center representative'' and adding ''SBA PCR'' and ''PCR'' in their places, respectively to read as follows:

19.502–9 Withdrawing or modifying small business set-asides.

(a) If, before award of a contract involving a total or partial small business set-aside, the contracting officer considers that award would be detrimental to the public interest (*e.g.,* payment of more than a fair market price), the contracting officer may withdraw the small business set-aside, whether it was unilateral or joint. The contracting officer shall initiate a withdrawal of an individual small business set-aside in total or in part, by giving written notice to the agency small business specialist and the SBA PCR (or, if a PCR is not assigned, see 19.402(a)) stating the reasons. In a similar manner, the contracting officer may modify a unilateral or joint class small business set-aside to withdraw one or more individual acquisitions.

■ 47. Add new section 19.503 to read as follows:

19.503 Reserves.

(a) In accordance with section 1331 of Public Law 111–240 (15 U.S.C. 644(r)(3)) and 13 CFR 125.2(e)(4), contracting officers may, at their discretion when conducting multiple-award procurements using full and open competition, reserve one or more contract awards for any of the small business concerns identified in 19.000(a)(3), when market research indicates—

(1) A total set-aside is not feasible because there is no reasonable expectation of receiving offers from at least two responsible small business concerns identified in 19.000(a)(3), at a fair market price that can perform the entire requirement; and

(2) A partial set-aside is not feasible because—

(i) The contracting officer is unable to divide the requirement into distinct portions or categories (*e.g.* Line Item Numbers (LINs), Special Item Numbers (SINs), Functional Areas (FAs), or other equivalent); or

(ii) There is no reasonable expectation that at least two responsible small business concerns identified in 19.000(a)(3) can perform any portion of the requirement at a fair market price.

(b) A reserve will result in one of the following—

(1) One or more contract awards to any one or more types of small business concerns identified in 19.000(a)(3); or

(2) In the case of a solicitation of a bundled requirement that will result in a multiple-award contract, an award to one or more small businesses with a Small Business Teaming Arrangement.

(c) The specific program eligibility requirements identified in this part apply.

(d) The limitation on subcontracting and the nonmanufacturer rule do not apply to reserves at the contract level, but shall apply to orders that are set aside (see 19.505).

■ 48. Add new section 19.504 to read as follows:

19.504 Setting aside orders under multiple-award contracts.

(a) In accordance with section 1331 of Public Law 111–240 (15 U.S.C. 644(r)(2)), contracting officers may, at their discretion, set aside orders placed under multiple-award contracts for any of the small business concerns identified in 19.000(a)(3).

(b) *Orders under partial set-aside contracts.*

(1) Only small business concerns awarded contracts for the portion(s) or category(s) that were set aside under the solicitation for the multiple-award contract may compete for orders issued under those portion(s) or category(s).

(2) Small business awardees may compete against other-than-small business awardees for an order issued under the portion of the multiple-award contract that was not set aside, if the small business received a contract award for the non-set-aside portion.

(c) *Orders under reserves.*

(1) The contracting officer may set aside orders for any of the small business concerns identified in 19.000(a)(3) when there are two or more contract awards for that type of small business concern; or

(2) The contracting officer may issue orders directly to one small business concern for work that it can perform when there is only one contract award to any one type of small business concern identified in 19.000(a)(3).

(3) Small business awardees may compete against other-than-small business awardees for an order that is not set aside if the small business received a contract award for the supplies or services being ordered.

(d) *Orders under Full and Open contracts.*

(1) The contracting officer shall state in the solicitation and resulting contract whether order set-asides will be discretionary or mandatory when the conditions in 19.502–2 are met at the time of order set-aside, and the specific program eligibility requirements, as applicable, are also then met.

(2) *Below $150,000.* When setting aside an order below $150,000, the contracting officer may set aside for any of the small businesses identified in 19.000(a)(3).

(3) *Above $150,000.* When setting aside an order above $150,000, the contracting officer shall first consider setting aside the order for the small business socioeconomic programs (*i.e.,* 8(a), HUBZone, service-disabled veteran-owned small business (SDVOSB), and Women-Owned Small Business (WOSB)) before considering a small business set-aside.

(4) The contracting officer shall comply with the specific program eligibility requirements identified in this part in addition to the ordering procedures for a multiple-award contract. For orders placed under the Federal Supply Schedules Program, see 8.405–5. For orders placed under all other multiple-award contracts, see 16.505.

■ 49. Add new section 19.505 to read as follows:

19.505 Performance of work requirements.

(a) *Limitation on subcontracting.* To be awarded a contract or order under a set-aside, the small business concern is required to perform:

(1) For services (except construction), at least 50 percent of the cost incurred for personnel with its own employees.

(2) For supplies or products (other than a procurement from a nonmanufacturer of such supplies or products), at least 50 percent of the cost of manufacturing the supplies or products (not including the costs of materials).

(3) For general construction, at least 15 percent of the cost (not including the costs of materials) with its own employees.

(4) For construction by special trade contractors, at least 25 percent of the cost (not including the cost of materials) with its own employees.

(b) *Compliance period.* A small business contractor is required to comply with the limitation on subcontracting—

(1) For a contract that has been set aside, by the end of the base term and then by the end of each subsequent option period. However, the contracting officer may instead require the contractor to comply with the limitation on subcontracting by the end of the performance period for each order issued under the contract; and

(2) For an order set aside under a contract as described in 8.405–5 and 16.505(b)(2)(i)(F), by the end of the performance period for the order.

(c) *Nonmanufacturer Rule.* (1) To be awarded a set-aside contract or order for supplies as a nonmanufacturer, a contractor is required—

(i) To provide the end item of a small business manufacturer, that has been manufactured or produced in the United States or its outlying areas (but see 19.1308(e)(1)(i) for HUBZone contracts and HUBZone orders);

(ii) To not exceed 500 employees;

(iii) To be primarily engaged in the retail or wholesale trade and normally sell the type of item being supplied; and

(iv) To take ownership or possession of the item(s) with its personnel, equipment or facilities in a manner consistent with industry practice.

(2) In addition to the requirements set forth in (c)(1) of this section, when the end item being acquired is a kit of supplies or other goods, 50 percent of the total value of the components of the kit shall be manufactured in the United States or its outlying areas by small business concerns. Where the Government has specified an item for the kit which is not produced by U.S. small business concerns, such items shall be excluded from the 50 percent calculation. See 13 CFR 121.406(c) for further information regarding nonmanufacturer kit assemblers.

(3) For size determination purposes, there can be only one manufacturer of the end product being acquired. For the purposes of the nonmanufacturer rule, the manufacturer of the end product being acquired is the concern that transforms raw materials and/or miscellaneous parts or components into the end product. Firms which only minimally alter the item being procured do not qualify as manufacturers of the end item, such as firms that add substances, parts, or components to an existing end item to modify its performance will not be considered the end item manufacturer, where those identical modifications can be performed by and are available from the manufacturer of the existing end item. See 13 CFR 121.406 for further information regarding manufacturers.

(4) *Waiver of nonmanufacturer rule.* (i) The SBA may grant an individual or a class waiver so that a nonmanufacturer does not have to furnish the product of a small business (but see 19.1308(e)(2)).

(A) *Class waiver.* SBA may waive the performance of work requirement for nonmanufacturers when SBA has determined that there are no small business manufacturers or processors in the Federal market for a particular class of products. This type of waiver is known as a class waiver and would apply to an acquisition for a specific product (or a product in a class of products). Contracting officers and other interested parties may request that the SBA issue a waiver of the nonmanufacturer rule, for a particular class of products.

(B) *Individual waiver.* The contracting officer may also request a waiver for an individual acquisition because no known domestic small business manufacturers or processors can reasonably be expected to offer a product meeting the requirements of the solicitation. The type of waiver is known as an individual waiver and would apply only to a specific acquisition.

(ii) Requests for waivers shall be sent via email to *nmrwaivers@sba.gov* or by mail to the—

Director for Government Contracting
United States Small Business Administration
Mail Code 6700
409 Third Street SW.
Washington, DC 20416.

(iii) For the most current listing of class waivers, contact the SBA Office of Government Contracting or go to *http://www.sba.gov/content/class-waivers.*

(5) *Exception to the nonmanufacturer rule.* The SBA provides for an exception to the nonmanufacturer rule when—

(i) The procurement of supplies or a manufactured end product—

(A) Is processed under simplified acquisition procedures (see part 13); or

(B) Is for an order set aside for any of the small business concerns identified in 19.000(a)(3), placed under a full and openly competed multiple-award contract;

(ii) The cost is not anticipated to exceed $25,000; and

(iii) The offeror supplies an end product that is manufactured or produced in the United States.

(d) The contracting officer shall document a small business contractor's compliance with the limitation on subcontracting as part of its performance evaluation in accordance with the procedures set forth in 42.1502.

■ 50. Add section 19.506 to read as follows:

19.506 Documentation requirements

(a)(1) The contracting officer shall document the rationale when a contract is not set aside for small business in accordance with 19.502–2.

(2) The contracting officer shall document the rationale when a multiple-award contract is not partially set aside, not reserved, and does not allow for setting aside of orders, when these authorities could have been used.

(b) If applicable, the documentation shall include the rationale for not accepting the recommendations made by the agency Director of Small and Disadvantaged Business Utilization, or, for the Department of Defense, the Director of the Office of Small Business Programs, or the Director's designee, as to whether a particular acquisition should be awarded under subparts 19.5, 19.8, 19.13, 19.14, or 19.15.

(c) Documentation is not required if a contract award is anticipated to a small business under subparts 19.5, 19.8, 19.13, 19.14, or 19.15.

19.508 [Redesignated as 19.507]

■ 51. Redesignate section 19.508 as section 19.507 and amend newly designated section 19.507 by revising paragraphs (c) through (f); and adding new paragraphs (g) and (h) to read as follows:

19.507 Solicitation provisions and contract clauses.

* * * * *

(c) The contracting officer shall insert the clause at 52.219–6, Notice of Total Small Business Set-Aside, in solicitations and contracts involving total small business set-asides. This includes multiple-award contracts when orders may be set aside for any of the small business concerns identified in 19.000(a)(3), as described in 8.405–5 and 16.505(b)(2)(i)(F). Use the clause at 52.219–6 with its Alternate I when including FPI in the competition in accordance with 19.502–7.

(d) The contracting officer shall insert the clause at 52.219–7, Notice of Partial Small Business Set-Aside, in solicitations and contracts involving partial small business set-asides. This includes part or parts of multiple-award contracts, including those described in 38.101. Use the clause at 52.219–7 with its Alternate I when including FPI in the competition in accordance with 19.502–7.

(e) The contracting officer shall insert the clause at 52.219–14, Limitations on Subcontracting, in solicitations and contracts for supplies, services, and construction, if any portion of the requirement is to be set aside for small business and the contract amount is expected to exceed $150,000. This includes multiple-award contracts when orders may be set aside for small business concerns, as described in 8.405–5 and 16.505(b)(2)(i)(F). For contracts that are set aside, the contracting officer shall indicate in paragraph (d) of the clause whether compliance with the limitations on subcontracting is required at the contract or order level.

(f)(1) The contracting officer shall insert the clause at 52.219–13, Notice of Set-Aside of Orders, in all solicitations for multiple-award contracts under which orders may be set aside for any

of the small business concerns identified in 19.000(a)(3), and all contracts awarded from such solicitations.

(2) The contracting officer shall insert the clause at 52.219–13 with its Alternate I in all full and open solicitations and contracts for multiple-award contracts without reserves, under which orders will be set aside for any of the small business concerns identified in 19.000(a)(3) if the conditions in 19.502–2 are met at the time of order set-aside, and the specific program eligibility requirements, as applicable, are also then met.

(g) The contracting officer shall insert the clause at 52.219–XX Notice of Small Business Reserve, in solicitations and contracts involving multiple-award contracts that have reserves.

(h)(1) The contracting officer shall insert the clause at 52.219–YY, Nonmanufacturer Rule, in solicitations and contracts when the item being acquired has been assigned a manufacturing or supply NAICS code, and any portion of the requirement is set-aside for any of the small business concerns identified in 19.000(a)(3) (with the exception of HUBZone small business concerns) including multiple-award contracts that provide for the set-aside of orders to small business concerns, or is awarded on a sole-source basis in accordance with subparts 19.8 and 19.14. The clause shall not be used when the Small Business Administration has determined that there are no small business manufacturers of the product or end items and has waived the nonmanufacturer rule (see 19.505(c)(4)).

(2) The clause at 52.219–YY with its Alternate I shall be used in solicitations and contracts that have been set-aside or awarded on a sole-source basis to HUBZone small business concerns, including multiple-award contracts that provide for the set-aside of orders as described in 8.405–5 and 16.505(b)(2)(i)(F).

■ 52. Amend section 19.601 by adding paragraph (f) to read as follows:

19.601 General.

* * * * *

(f) For the purpose of receiving a COC on an unrestricted acquisition, a small business nonmanufacturer may furnish any domestically produced or manufactured product.

19.602–3 [Amended]

■ 53. Amend section 19.602–3 by removing from paragraph (a)(2) ''Director,'' and adding ''Director of the'' in its place.

■ 54. Amend section 19.602–4 by adding a sentence to the end of paragraph (b) to read as follows:

19.602–4 Awarding the contract.

* * * * *

(b) * * * Where SBA issues a COC, the contracting officer may decide not to award to that offeror for reasons unrelated to responsibility.

■ 55. Amend section 19.804–2 by revising paragraph (a) to read as follows:

19.804–2 Agency offering.

(a) After completing its evaluation, the agency shall notify the SBA of the extent of its plans to place 8(a) contracts with the SBA for specific quantities of items or work, including 8(a) contracts that are reserved in accordance with 19.503.

* * * * *

■ 56. Amend section 19.804–6 by revising paragraphs (a) and (b) to read as follows:

19.804–6 Indefinite delivery contracts.

(a) Separate offers and acceptances are not required for individual orders under multiple-award contracts that have been set aside for exclusive competition among 8(a) contractors, and the individual order is to be competed among all 8(a) contract holders. SBA's acceptance of the original contract is valid for the term of the contract.

(b) *Sole source orders.* The contracting officer may issue an order as a sole source when—

(1) The multiple-award contract was set aside for exclusive competition among 8(a) participants;

(2) The order has an estimated value less than or equal to the dollar thresholds set forth at 19.805–1(a)(2);

(3) The offering and acceptance procedures at 19.804–2 and 19.804–3 are followed.

* * * * *

19.805–2 [Amended]

■ 57. Amend section 19.805–2 by removing from paragraph (b)(2) ''under 19.809'' and adding ''under 19.809–1'' in its place.

■ 58. Revise section 19.809 to read as follows:

19.809 Preaward considerations.

19.809–1 Preaward survey.

The contracting officer should request a preaward survey of the 8(a) contractor whenever considered useful. If the results of the preaward survey or other information available to the contracting officer raise substantial doubt as to the firm's ability to perform, the contracting officer shall refer the matter to SBA for Certificate of Competency consideration under subpart 19.6.

19.809–2 Performance of work requirements.

(a) *Limitation on subcontracting.* To be awarded a contract or order under the 8(a) program, the 8(a) participant is required to perform—

(1) For services (except construction), at least 50 percent of the cost incurred for personnel with its own employees;

(2) For supplies or products (other than a procurement from a nonmanufacturer of such supplies or products), at least 50 percent of the cost of manufacturing the supplies or products (not including the costs of materials);

(3) For general construction, at least 15 percent of the cost with its own employees (not including the costs of materials); and

(4) For construction by special trade contractors, at least 25 percent of the cost with its own employees (not including the cost of materials).

(b) *Compliance period.* An 8(a) contractor is required to comply with the limitation on subcontracting—

(1) For a contract under the 8(a) program, by the end of the base term and then by the end of each subsequent option period. However, the contracting officer may instead require the contractor to comply with the limitation on subcontracting by the end of the performance period for each order issued under the contract; and

(2) For an order set aside under the 8(a) program as described in 8.405–5 and 16.505(b)(2)(i)(F), by the end of the performance period for the order.

(c) The applicable SBA District Director may waive the provisions in paragraph (b)(1) requiring a participant to comply with the limitation on subcontracting for each period of performance or for each order. Instead, the District Director may permit the participant to subcontract in excess of the limitations on subcontracting where the District Director makes a written determination that larger amounts of subcontracting are essential during certain stages of performance.

(1) The 8(a) participant is required to provide the SBA District Director written assurance that the participant will ultimately comply with the requirements of this section prior to contract completion. The contracting officer shall review and concur with the written assurance before submission to the SBA District Director.

(2) The contracting officer does not have the authority to waive the provisions of this section requiring a participant to comply with the

limitation on subcontracting for each period of performance or order, even if the agency has a Partnership Agreement with SBA.

(3) Where the participant does not ultimately comply with the performance of work requirements by the end of the contract, SBA will not grant future waivers for the participant.

(d) *Nonmanufacturer Rule.* See 19.505(c) for application of the nonmanufacturer rule, inclusive of waivers and exceptions to the nonmanufacturer rule.

(e) The contracting officer shall document an 8(a) participant's compliance with the limitation on subcontracting as part of its performance evaluation in accordance with the procedures set forth in 42.1502.

19.810 [Amended]

■ 59. Amend section 19.810 by removing from paragraph (b) ''for Small'' and adding ''for the Office of Small'' in its place.

■ 60. Amend section 19.811–3 by revising paragraphs (d) and (e) to read as follows:

19.811–3 Contract clauses.

* * * * *

(d) The contracting officer shall insert the clause at 52.219–18, Notification of Competition Limited to Eligible 8(a) Concerns, in competitive solicitations and contracts when the acquisition is accomplished using the procedures of 19.805. The clause at 52.219–18 with its Alternate I shall be used when competition is to be limited to 8(a) concerns within one or more specific SBA districts pursuant to 19.804–2.

(e) See 19.507(e) regarding the limitations on subcontracting and 19.507(h) regarding the nonmanufacturer rule to any contract or order resulting from this subpart.

19.1303 [Amended]

■ 61. Amend section 19.1303 by removing paragraph (e).

■ 62. Amend section 19.1307 by—

■ a. Removing from paragraph (a)(1) ''or'';

■ b. Removing from paragraph (a)(2) ''contracts).'' and adding ''contracts); or'' in its place; and

■ c. Adding paragraph (a)(3).

The addition to read as follows:

19.1307 Price evaluation preference for HUBZone small business concerns.

(a) * * *

(3) Where the solicitation has been reserved for any of the small business concerns identified in 19.000(a)(3).

* * * * *

■ 63. Revise section 19.1308 to read as follows:

19.1308 Performance of work requirements.

(a) See 13 CFR 125.1 for definitions of terms used in paragraph (b) of this section.

(b) *Limitation on subcontracting.* To be awarded a contract or order that was set aside or awarded on a sole source basis to a HUBZone small business concern, the HUBZone small business concern is required—

(1) For services (except construction), to spend at least 50 percent of the cost of performance incurred for personnel on its own employees or on the employees of other HUBZone small business concerns;

(2) For supplies or products (other than a procurement from a nonmanufacturer of such supplies or products), to spend at least 50 percent of the cost of manufacturing, excluding the cost of materials, on performing the contract in a HUBZone.

(3) For general construction—

(i) To spend at least 15 percent of the cost of performance incurred for personnel on its own employees; and

(ii) To spend at least 50 percent of the cost of performance incurred for personnel on its own employees or on a combination of its own employees and employees of HUBZone small business concern subcontractors.

(4) For construction by special trade contractors—

(i) To spend at least 25 percent of the cost of contract performance incurred for personnel on its own employees; and

(ii) To spend at least 50 percent of the cost of the contract incurred for personnel on its own employees or on a combination of its own employees and employees of HUBZone small business concern subcontractors.

(c) Before issuing a solicitation for general construction or construction by special trade contractors, the contracting officer shall determine if at least two HUBZone small business concerns can spend at least 50 percent of the cost of contract performance to be incurred for personnel on their own employees or subcontract employees of other HUBZone small business concerns. If the contracting officer is unable to make this determination, he or she may waive the 50 percent requirement; however, the HUBzone small business concern is still required to meet the cost incurred for personnel requirements in paragraphs (b)(3)(i) and (b)(4)(i).

(d) *Compliance period.* A HUBZone small business contractor is required to comply with the limitation on subcontracting—

(1) For a contract that has been set aside or awarded on a sole source basis to a HUBZone small business concern, by the end of the base term and then by the end of each subsequent option period. However, the contracting officer may instead require the contractor to comply with the limitation on subcontracting by the end of the performance period for each order issued under the contract; and

(2) For an order set aside for HUBZone small business concerns as described in 8.405–5 and 16.505(b)(2)(i)(F), by the end of the performance period for the order.

(e) *Nonmanufacturer rule.* (1) To be awarded a set-aside contract or order for supplies as a nonmanufacturer, a contractor is required—

(i) To provide the end item of a HUBZone small business manufacturer, that has been manufactured or produced in the United States or its outlying areas;

(ii) Not to exceed 500 employees;

(iii) To be primarily engaged in the retail or wholesale trade and normally sell the type of item being supplied; and

(iv) To take ownership or possession of the item(s) with its personnel, equipment or facilities in a manner consistent with industry practice.

(2) There are no class waivers or waivers to the nonmanufacturer rule for individual solicitations for HUBZone contracts and HUBZone orders.

(3) For HUBZone contracts and HUBZone orders at or below $25,000 in total value, a HUBZone small business concern may supply the end item of any manufacturer, including a large business, so long as the product acquired is manufactured or produced in the United States.

(f) The contracting officer shall document a HUBZone contractor's compliance with the limitation on subcontracting as part of its performance evaluation in accordance with the procedures set forth in 42.1502.

■ 64. Revise section 19.1309 to read as follows:

19.1309 Contract clauses.

(a)(1) The contracting officer shall insert the clause 52.219–3, Notice of HUBZone Set-Aside or Sole Source Award, in solicitations and contracts for acquisitions that are set aside or awarded on a sole source basis to, HUBZone small business concerns under 19.1305 or 19.1306. This includes multiple-award contracts when orders may be set aside for HUBZone small business concerns as described in 8.405–5 and 16.505(b)(2)(i)(F).

(2) The contracting officer shall use the clause with its Alternate I to waive the 50 percent requirement if the conditions at 19.1308(c) apply.

(b)(1) The contracting officer shall insert the clause at FAR 52.219–4,

Notice of Price Evaluation Preference for HUBZone Small Business Concerns, in solicitations and contracts for acquisitions conducted using full and open competition.

(2) The contracting officer shall use the clause with its Alternate I to waive the 50 percent requirement if the conditions at 19.1308(c) apply.

(c) For use of clause 52.219–YY, Nonmanufacturer Rule, see the prescription at 19.507(h)(2).

■ 65. Amend section 19.403 by revising paragraph (d) to read as follows:

19.1403 Status as a service-disabled veteran-owned small business concern.

* * * * *

(d) Any service-disabled veteran-owned small business concern (nonmanufacturer) is required to meet the requirements in 19.1407(c) to receive a benefit under this program.

19.1407 [Redesignated as 19.1408]

■ 66. Redesignate section 19.1407 as section 19.1408.

■ 67. Add new section 19.1407 to read as follows:

19.1407 Performance of work requirements.

(a) *Limitation on subcontracting.* To be awarded a contract or order under an SDVOSB set-aside or a contract as an SDVOSB sole source, the SDVOSB concern is required to—

(1) For services (except construction), spend at least 50 percent of the cost incurred for personnel on its own employees or the employees of other SDVOSBs;

(2) For supplies or products (other than a procurement from a nonmanufacturer of such supplies or products), spend at least 50 percent of the cost of manufacturing the supplies or products (not including the costs of materials) on itself or by other SDVOSBs;

(3) For general construction, spend at least 15 percent of the cost (not including the costs of materials) incurred for personnel on its own employees or the employees of other SDVOSBs; or

(4) For construction by special trade contractors, incur at least 25 percent of the cost (not including the cost of materials) incurred for personnel on its own employees or the employees of other SDVOSBs.

(b) *Compliance period.* An SDVOSB contractor is required to comply with the limitation on subcontracting—

(1) For a contract that has been set aside or awarded on a sole source basis to an SDVOSB concern, by the end of the base term and then by the end of each subsequent option period. However, the contracting officer may instead require the contractor to comply with the limitation on subcontracting by the end of the performance period for each order issued under the contract; and

(2) For an order set aside for SDVOSB contractor as described in 8.405–5 and 16.505(b)(2)(i)(F), by the end of the performance period for the order.

(c) *Nonmanufacturer rule.* See 19.505(c) for application of the nonmanufacturer rule, inclusive of waivers and exceptions to the nonmanufacturer rule.

(d) The contracting officer shall document an SDVOSB contractor's compliance with the limitation on subcontracting as part of its performance evaluation in accordance with the procedures set forth in 42.1502.

■ 68. Amend the newly designated section 19.1408 by removing from the body paragraph ''or reserved for,'' and adding a sentence to the end of the paragraph to read as follows:

19.1408 Contract clauses.

* * * For contracts that are set-aside, the contracting officer shall indicate in paragraph (e) of the clause whether compliance with the limitations on subcontracting is required at the contract level or order level.

19.1503 [Amended]

■ 69. Amend section 19.1503 by removing paragraph (g).

19.1507 [Redesignated as 19.1508]

■ 70. Redesignate section 19.1507 as section 19.1508.

■ 71. Add new section 19.1507 to read as follows:

19.1507 Performance of work requirements.

(a) *Limitation on subcontracting.* To be awarded a contract or order that is set aside for an EDWOSB or for a WOSB eligible under the WOSB Program, the contractor is required to perform—

(1) For services (except construction), at least 50 percent of the cost incurred for personnel with its own employees;

(2) For supplies or products (other than a procurement from a nonmanufacturer of such supplies or products), at least 50 percent of the cost of manufacturing the supplies or products (not including the costs of materials);

(3) For general construction, at least 15 percent of the cost with its own employees (not including the costs of materials); or

(4) For construction by special trade contractors, at least 25 percent of the cost with its own employees (not including the cost of materials).

(b) *Compliance period.* An EDWOSB or WOSB is required to comply with the limitation on subcontracting—

(1) For a contract that has been set aside, by the end of the base term and then by the end of each subsequent option period. However, the contracting officer may instead require the contractor to comply with the limitation on subcontracting by the end of the performance period for each order issued under the contract; and

(2) For an order set aside as described in 8.405–5 and 16.505(b)(2)(i)(F), by the end of the performance period for the order.

(c) *Nonmanufacturer rule.* See 19.505(c) for application of the nonmanufacturer rule, inclusive of waivers and exceptions to the nonmanufacturer rule.

(d) The contracting officer shall document an EDWOSB or WOSB contractor's compliance with the limitation on subcontracting as part of its performance evaluation in accordance with the procedures set forth in 42.1502.

■ 72. Revise section 19.1508 by—

■ a. Redesignating paragraph (a) as paragraph (a)(1);

■ b. Removing from the newly designated paragraph (a)(1) ''or reserved'';

■ c. Adding paragraph (a)(2);

■ d. Redesignating paragraph (b) as paragraph (b)(1);

■ e. Removing from the newly designated paragraph (b)(1) ''or reserved''; and

■ f. Adding paragraph (b)(2).

The additions to read as follows:

19.1508 Contract clauses.

(a) * * *

(2) For contracts that are set aside, the contracting officer shall indicate in paragraph (e) of the clause whether compliance with the limitations on subcontracting is required at the contract level or order level.

(b) * * *

(2) For contracts that are set aside, the contracting officer shall indicate in paragraph (e) of the clause whether compliance with the limitations on subcontracting is required at the contract level or order level.

Part 42—Contract Administration and Audit Services

■ 73. Amend section 42.1503 by revising paragraph (b)(2)(vi) to read as follows:

42.1503 Procedures.

* * * * *

(b) * * *

(2) * * *

(vi) Other (as applicable) (*e.g.,* compliance with limitation on subcontracting, late or nonpayment to subcontractors, trafficking violations, tax delinquency, failure to report in accordance with contract terms and conditions, defective cost or pricing data, terminations, suspension and debarments).

* * * * *

Part 52—Solicitation Provisions and Contract Clauses

■ 74. Amend section 52.204–8 by—

■ a. Revising the date of the clause;

■ b. Revising paragraph (c)(1)(x);

■ c. Adding paragraph (c)(1)(x)(C); and

■ d. Adding Alternate I.

The revisions and additions to read as follows:

52.204–8 Annual Representations and Certifications.

* * * * *

Annual Representations and Certifications (Date)

* * * * *

(c)(1) * * *

(x) 52.219–1, Small Business Program Representations (Basic, Alternates I and II). This provision applies to solicitations when the contract will be performed in the United States or its outlying areas.

* * * * *

(C) The provision with its Alternate II applies to solicitations that will result in a multiple-award contract with more than one NAICS code assigned.

* * * * *

Alternate I (DATE). As prescribed in 4.1202(a), substitute the following paragraph (a) for paragraph (a) of the basic provision:

(a)(1) The North American Industry Classification System (NAICS) codes and corresponding size standards for this acquisition are as follows; the categories or portions these NAICS codes are assigned to are specified elsewhere in the solicitation:

NAICS code	Size standard
____	____
____	____
____	____

[*Contracting Officer to insert NAICS codes and size standards*].

(2) The small business size standard for a concern which submits an offer in its own name, other than on a construction or service contract, but which proposes to furnish a product which it did not itself manufacture (*i.e.* nonmanufacturer), is 500 employees.

■ 75. Amend section 52.212–1 by revising the date of the provision and paragraph (a) to read as follows:

52.212–1 Instructions to Offerors—Commercial Items.

* * * * *

Instructions to Offerors—Commercial Items (Date)

(a) *North American Industry Classification System (NAICS) code and small business size standard.* The NAICS code(s) and small business size standard(s) for this acquisition appear elsewhere in the solicitation. However, the small business size standard for a concern which submits an offer in its own name, but which proposes to furnish an item which it did not itself manufacture, is 500 employees.

* * * * *

■ 76. Amend section 52.212–5 by—

■ a. Revising the date of the clause;

■ b. Revising paragraphs (b)(11), (b)(12), (b)(14), (b)(15), (b)(19), and (b)(21) through (b)(24);

■ c. Redesignating paragraphs (b)(25) through (b)(58) as paragraphs (b)(27) through (b)(59), respectively; and

■ d. Adding new paragraphs (b)(25) and (b)(26).

The additions and revisions to read as follows:

52.212–5 Contract Terms and Conditions Required to Implement Statutes or Executive Orders—Commercial Items.

* * * * *

Contract Terms and Conditions Required to Implement Statutes or Executive Orders—Commercial Items (Date)

* * * * *

(b) * * *

__(11)(i) 52.219–3, Notice of HUBZone Set-Aside or Sole-Source Award (DATE) (15 U.S.C. 657a).

__(ii) Alternate I (DATE) of 52.219–3.

__(12)(i) 52.219–4, Notice of Price Evaluation Preference for HUBZone Small Business Concerns (DATE) (if the offeror elects to waive the preference, it shall so indicate in its offer) (15 U.S.C. 657a).

__(ii) Alternate I (DATE) of 52.219–4.

* * * * *

__(14)(i) 52.219–6, Notice of Total Small Business Set-Aside (DATE) (15 U.S.C. 644).

__(ii) Alternate I (DATE).

__(15)(i) 52.219–7, Notice of Partial Small Business Set-Aside (DATE) (15 U.S.C. 644).

__(ii) Alternate I (DATE) of 52.219–7.

* * * * *

__(19) 52.219–14, Limitations on Subcontracting (DATE) (15 U.S.C. 637(a)(14)).

* * * * *

__(21) 52.219–27, Notice of Service-Disabled Veteran-Owned Small Business Set-Aside (DATE) (15 U.S.C. 657 f).

__(22) 52.219–28, Post Award Small Business Program Rerepresentation (DATE) (15 U.S.C. 632(a)(2)).

__(23) 52.219–29, Notice of Set-Aside for, or Sole Source Award to, Economically Disadvantaged Women-Owned Small Business (EDWOSB) Concerns (DATE) (15 U.S.C. 637(m)).

__(24) 52.219–30, Notice of Set-Aside for, or Sole Source Award to, Women-Owned Small Business Concerns Eligible Under the Women-Owned Small Business Program (DATE) (15 U.S.C. 637(m)).

__(25) 52.219–XX, Notice of Small Business Reserve (DATE) (15 U.S.C. 644(r)).

__(26) 52.219–YY, Nonmanufacturer Rule (DATE) (15 U.S.C. 637(a)(17)).

__(i) Alternate I (DATE) of 52.219–YY.

* * * * *

■ 77. Amend section 52.219–1 by—

■ a. Revising the date of the clause and paragraph (b)(3);

■ b. Removing the heading from paragraph (d) and paragraph (d)(1);

■ c. Redesignating paragraph (d)(2) as the introductory text of paragraph (d);

■ d. Redesignating paragraphs (d)(2)(i) through (iii) as paragraphs (d)(1) through (3);

■ e. Removing from the newly designated introductory paragraph (d) ''Under'' and adding ''*Notice.* Under'' in its place; and

■ f. Adding Alternate II to read as follows:

52.219–1 Small Business Program Representations.

* * * * *

Small Business Program Rerepresentations (Date)

* * * * *

(b) * * *

(3) The small business size standard for a concern which submits an offer in its own name, other than on a construction or service contract, but which proposes to furnish a product which it did not itself manufacture *i.e.* nonmanufacturer, is 500 employees.

* * * * *

Alternate II (DATE). As prescribed in 19.309(a)(3), substitute the following paragraphs (b) and (c)(1) for paragraphs (b) and (c)(1) of the basic provision:

(b)(1) The North American Industry Classification System (NAICS) codes and corresponding size standards for this acquisition are as follows; the categories or portions these NAICS codes are assigned to are specified elsewhere in the solicitation:

NAICS code	Size standard
____	____
____	____
____	____

[*Contracting Officer to insert NAICS codes and size standards*].

(2) The small business size standard for a concern which submits an offer in its own name, other than on a construction or service contract, but which proposes to furnish a product which it did not itself manufacture (*i.e.* nonmanufacturer), is 500 employees.

(c) *Representations.*

(1) The offeror shall represent its small business size status for each one of the NAICS codes assigned to this acquisition under which it is submitting an offer.

NAICS code	Small business concern (yes/no)
____	____
____	____
____	____

■ 78. Amend section 52.219–3 by—
■ a. Revising the introductory paragraph, the date of the clause, and paragraph (a);
■ b. Removing from paragraph (b)(1) ''or reserved for,''
■ c. Revising paragraphs (d), (e), and (f); and
■ d. Revising Alternate I.

The revised text to read as follows:

52.219–3 Notice of HUBZone Set-Aside or Sole Source Award.

As prescribed in 19.1309(a)(1), insert the following clause:

Notice of HUBZone Set-Aside or Sole Source Award (Date)

(a) *Definition.* See 13 CFR 125.1 and 126.103 for definitions of terms used in the clause.

* * * * *

(d) *Limitation on subcontracting.* The Contractor shall spend—

(1) For services (except construction), at least 50 percent of the cost of contract performance incurred for personnel on its own employees or employees of other HUBZone small business concerns;

(2) For supplies (other than acquisition from a nonmanufacturer of the supplies), at least 50 percent of the cost of manufacturing, excluding the cost of materials, in a HUBZone;

(3) For general construction—

(i) At least 15 percent of the cost of contract performance incurred for personnel on its own employees;

(ii) At least 50 percent of the cost of the contract performance incurred for personnel on its own employees or on a combination of its own employees and employees of HUBZone small business concern subcontractors; and

(iii) No more than 50 percent of the cost of contract performance incurred for personnel on concerns that are not HUBZone small business concerns; or

(4) For construction by special trade contractors—

(i) At least 25 percent of the cost of contract performance incurred for personnel on its own employees;

(ii) At least 50 percent of the cost of the contract performance incurred for personnel on its own employees or on a combination of its own employees and employees of HUBZone small business concern subcontractors;

(iii) No more than 50 percent of the cost of contract performance to be incurred for personnel on concerns that are not HUBZone small business concerns.

(e) A HUBZone small business contractor shall comply with the limitation on subcontracting as follows:

(1) For contracts, in accordance with (b)(1) and (2) of this clause—

[*Contracting Officer check as appropriate.*]

__By the end of the base term of the contract and then by the end of each subsequent option period; or

__By the end of the performance period for each order issued under the contract.

(2) For set-aside orders, in accordance with (b)(3) of this clause, by the end of the performance period for the order.

(f) A HUBZone joint venture agrees that, in the performance of the contract, the applicable percentage specified in paragraph (c) of this clause shall be performed by the aggregate of the HUBZone small business participants.

* * * * *

Alternate I (DATE). As prescribed in 19.1309(a)(2), substitute the following paragraphs (d)(3) and (d)(4) for paragraphs (d)(3) and (d)(4) of the basic clause:

(3) For general construction, at least 15 percent of the cost of the contract performance to be incurred for personnel shall be spent on the concern's employees; or

(4) For specialty trade construction, at least 25 percent of the cost of the contract performance to be incurred for personnel shall be spent on the concern's employees.

* * * * *

■ 79. Amend section 52.219–4 by—
■ a. Revising the introductory paragraph, date, and paragraph (a) of the clause;
■ b. Removing from paragraph (b)(1)(i) ''preference; and'' and adding ''preference;'' in its place;
■ c. Removing from paragraph (b)(1)(ii) ''concerns.'' and adding ''concerns; and'' in its place;
■ d. Adding paragraph (b)(1)(iii);
■ e. Revising paragraph (d);
■ f. Removing paragraph (f);
■ g. Redesignating paragraph (g) as paragraph (f); and
■ h. Revising Alternate I.

The additions and revisions to read as follows:

52.219–4 Notice of Price Evaluation Preference for HUBZone Small Business Concerns.

As prescribed in 19.1309(b)(1), insert the following clause:

Notice of Price Evaluation for HUBZone Small Business Concerns (Date)

(a) *Definition.* See 13 CFR 126.103 for definition of HUBZone.

(b) * * *

(1) * * *

(iii) Where the solicitation has been reserved for a HUBZone small business concern.

* * * * *

(d) *Limitation on subcontracting.* The Contractor shall spend—

(1) For services (except construction), at least 50 percent of the cost of personnel for contract performance on its own employees or employees of other HUBZone small business concerns;

(2) For supplies (other than acquisition from a nonmanufacturer of the supplies), at least 50 percent of the cost of manufacturing, excluding the cost of materials, in a HUBZone;

(3) For general construction—

(i) At least 15 percent of the cost of contract performance to be incurred for personnel on its own employees;

(ii) At least 50 percent of the cost of the contract performance to be incurred for personnel on its own employees or on a combination of its own employees and employees of HUBZone small business concern subcontractors; and

(iii) No more than 50 percent of the cost of contract performance to be incurred for personnel on concerns that are not HUBZone small business concerns; or

(4) For construction by special trade contractors—

(i) At least 25 percent of the cost of contract performance to be incurred for on its own employees;

(ii) At least 50 percent of the cost of the contract performance to be incurred for personnel on its own employees or on a combination of its own employees and employees of HUBZone small business concern subcontractors;

(iii) No more than 50 percent of the cost of contract performance to be incurred for personnel on concerns that are not HUBZone small business concerns.

* * * * *

(End of clause)

Alternate I (DATE). As prescribed in 19.1309(b)(2), substitute the following paragraphs (d)(3) and (d)(4) for paragraphs (d)(3) and (d)(4) of the basic clause:

(3) For general construction, at least 15 percent of the cost of the contract performance to be incurred for personnel on its own employees; or

(4) For construction by special trade contractors, at least 25 percent of the cost of the contract performance to be incurred for personnel on its own employees.

* * * * *

■ 80. Amend section 52.219–6 by—
■ a. Revising the introductory text and the date of the clause;
■ b. Removing from paragraph (b)(1) ''or reserved'';
■ c. Removing paragraph (d) and Alternate I;
■ d. Redesignating Alternate II as Alternate I; and
■ e. Revising the date and the introductory text of the newly designated Alternate I.

The revisions to read as follows:

52.219–6 Notice of Total Small Business Set-Aside.

As prescribed in 19.507(c), insert the following clause:

Notice of Total Business Set-Aside (Date)

* * * * *

Alternate I (DATE). As prescribed in 19.507(c), substitute the following paragraph (c) for paragraph (c) of the basic clause:

* * *

■ 81. Amend section 52.219–7 by—
■ a. Revising the introductory text and the date of the clause;
■ b. Revising paragraphs (b) and (c);
■ c. Adding paragraphs (d) and (e);
■ d. Removing Alternate I; and
■ e. Redesignating Alternate II as Alternate I and revising the alternate.

The addition and revisions to read as follows:

52.219–7 Notice of Partial Small Business Set-Aside.

As prescribed in 19.507(d), insert the following clause:

Notice of Partial Small Business Set-Aside (Date)

* * * * *

(b) *Applicability.* This clause applies only to contracts that have been partially set aside for small business concerns.

(c) *General.* (1) A portion of this requirement, identified elsewhere in this solicitation, has been set aside for award to one or more small business concerns identified in 19.000(a)(3). Offers received from concerns that do not qualify as small business concerns shall be considered nonresponsive and shall be rejected on the set-aside portion of the requirement.

(2) Small business concerns may submit offers and compete for the non-set-aside portion and the set-aside portion.

(d) The Offeror shall—

[*Contracting Officer check as appropriate.*]

__Submit a separate offer for each portion of the solicitation for which it wants to compete (*i.e.* set-aside portion, non-set-aside portion, or both); or

__Submit one offer to include all portions for which it wants to compete.

(e) *Partial set-asides of multiple-award contracts.*

(1) Small business concerns will not compete against other-than-small business concerns for any order issued under the part or parts of the multiple-award contract that are set aside.

(2) Small business concerns may compete for orders issued under the part or parts of the multiple-award contract that are not set aside, if the small business concern received a contract award for the non-set-aside portion.

(End of Clause)

Alternate I (DATE). As prescribed in 19.507(d), add the following paragraph (f) to the basic clause:

(f) Notwithstanding paragraph (c) of this clause, offers from Federal Prison Industries, Inc., will be solicited and considered for both the set-aside and non-set-aside portion of this requirement.

■ 82. Amend section 52.219–13 by—
■ a. Revising the introductory text and the date of the clause;
■ b. Redesignating the body paragraph as paragraph (b);
■ c. Adding paragraph (a); and
■ d. Adding Alternate I.

The revised and added text reads as follows:

52.219–13 Notice of Set-Aside of Orders.

As prescribed in 19.507(f)(1), insert the following clause:

Notice of Set-Aside of Orders (Date)

(a) The contracting officer may set aside orders to the small business concerns identified in 19.000(a)(3).

* * * * *

Alternate I (Date). As prescribed in 19.507(f)(2), substitute the following paragraph (a) for paragraph (a) of the basic clause:

(a) The contracting officer will set aside orders to the small business concerns identified in 19.000(a)(3) when the conditions of FAR 19.502–2 and the specific program eligibility requirements are met, as applicable.

■ 83. Amend section 52.219–14 by—
■ a. Revising the introductory text and the date of the clause;
■ b. Removing from paragraph (b)(1) ''or reserved'';
■ c. Revising the introductory text of paragraph (c); and
■ d. Adding paragraph (d).

The addition and revision to read as follows:

52.219–14 Limitations on Subcontracting.

As prescribed in 19.507(e), insert the following clause:

Limitations on Subcontracting (Date)

* * * * *

(c) *Limitation on subcontracting.* By submission of an offer and execution of a contract, the Offeror/Contractor agrees that in performance of the contract in the case of a contract for—

* * * * *

(d) The Contractor shall comply with the limitation on subcontracting as follows:

(1) For contracts, in accordance with (b)(1) and (2) of this clause—

[*Contracting Officer check as appropriate.*]

__By the end of the base term of the contract and then by the end of each subsequent option period; or

__By the end of the performance period for each order issued under the contract.

(2) For set-aside orders, in accordance with (b)(3) of this clause, by the end of the performance period for the order.

(End of clause)

■ 84. Amend section 52.219–18 by revising the date of the clause and paragraph (d); and removing Alternate II to read as follows:

52.219–18 Notification of Competition Limited to Eligible 8(a) Concerns.

* * * * *

Notification of Competition Limited to Eligible 8(a) Concerns (Date)

* * * * *

(d) The_____[*insert name of SBA's contractor*] shall notify the_____ [*insert name of contracting agency*] Contracting Officer in writing immediately upon entering an agreement (either oral or written) to transfer all or part of its stock.

(End of clause)

* * * * *

■ 85. Amend section 52.219–27 by—
■ a. Revising the introductory text and the date of the clause;
■ b. Removing from paragraph (b)(1) ''or reserved'';
■ c. Revising the heading of paragraph (d);
■ d. Removing paragraph (f);
■ e. Redesignating paragraph (e) as paragraph (f); and
■ f. Adding new paragraph (e).

The addition and revisions to read as follows:

52.219–27 Notice of Service-Disabled Veteran-Owned Small Business Set-Aside.

As prescribed in 19.1408, insert the following clause:

Notice of Service-Disabled Veteran-Owned Small Business Set-Aside (Date)

* * * * *

(d) *Limitation on subcontracting.* * * *

(e) A service-disabled veteran-owned small business concern shall comply with the limitation on subcontracting as follows:

(1) For contracts, in accordance with (b)(1) and (2) of this clause—

[*Contracting Officer check as appropriate.*]

__By the end of the base term of the contract and then by the end of each subsequent option period; or

__By the end of the performance period for each order issued under the contract.

(2) For set-aside orders, in accordance with (b)(3) of this clause, by the end of the performance period for the order.

* * * * *

■ 86. Amend section 52.219–28 by—
■ a. Revising the date of the clause;
■ b. Removing from paragraph (b) ''status'' and adding ''and socioeconomic status'' in its place;
■ c. Removing from paragraph (c) ''code'' and adding ''code(s)'' in its place, twice;
■ d. Revising paragraph (g); and
■ e. Adding paragraph (h).

The addition and revision to read as follows:

52.219–28 Post-Award Small Business Program Rerepresentation.

* * * * *

Post-Award Small Business Program Rerepesentation (Date)

* * * * *

(g) If the Contractor does not have representations and certifications in SAM, or does not have a representation in SAM for the NAICS code applicable to this contract, the Contractor is required to complete the following rerepresentation and submit it to the contracting office, along with the contract number and the date on which the rerepresentation was completed:

(1) The Contractor represents that it □ is, □ is not a small business concern under NAICS Code_____assigned to contract number_____.

(2) [Complete only if the Contractor rerepresented itself as a small business concern in paragraph (g)(1) of this clause.] The Contractor rerepresents that it □ is, □ is not, a small disadvantaged business concern as defined in 13 CFR 124.1002.

(3) [Complete only if the Contractor rerepresented itself as a small business concern in paragraph (g)(1) of this clause.] The Contractor rerepresents that it □ is, □ is not a women-owned small business concern.

(4) Women-owned small business (WOSB) concern eligible under the WOSB Program. [*Complete only if the Contractor rerepresented itself as a women-owned small business concern in paragraph (g)(3) of this clause.*] The Contractor rerepresents that—

(i) It □ is, □ is not a WOSB concern eligible under the WOSB Program, has provided all the required documents to the WOSB Repository, and no change in circumstances or adverse decisions have been issued that affects its eligibility; and

(ii) It □ is, □ is not a joint venture that complies with the requirements of 13 CFR part 127, and the rerepresentation in paragraph (g)(4)(i) of this clause is accurate for each WOSB concern eligible under the WOSB Program participating in the joint venture. [*The Contractor shall enter the name or names of the WOSB concern eligible under the WOSB Program and other small businesses that are participating in the joint venture:* _____] Each WOSB concern eligible under the WOSB Program participating in the joint venture shall submit a separate signed copy of the WOSB rerepresentation.

(5) Economically disadvantaged women-owned small business (EDWOSB) concern. [*Complete only if the Contractor rerepresented itself as a women-owned small business concern eligible under the WOSB Program in (g)(4) of this clause.*] The Contractor represents that—

(i) It □ is, □ is not an EDWOSB concern eligible under the WOSB Program, has provided all the required documents to the WOSB Repository, and no change in circumstances or adverse decisions have been issued that affects its eligibility; and

(ii) It □ is, □ is not a joint venture that complies with the requirements of 13 CFR part 127, and the rerepresentation in paragraph (g)(5)(i) of this clause is accurate for each EDWOSB concern participating in the joint venture. [The Contractor shall enter the name or names of the EDWOSB concern and other small businesses that are participating in the joint venture:_____.] Each EDWOSB concern participating in the joint venture shall submit a separate signed copy of the EDWOSB rerepresentation.

(6) [Complete only if the Contractor rerepresented itself as a small business concern in paragraph (g)(1) of this provision.] The Contractor rerepresents as part of its offer that it □ is, □ is not a veteran-owned small business concern.

(7) [Complete only if the Contractor rerepresented itself as a veteran-owned small business concern in paragraph (g)(6) of this clause.] The Contractor rerepresents that it □ is, □ is not a service-disabled veteran-owned small business concern.

(8) [Complete only if the Contractor rerepresented itself as a small business concern in paragraph (g)(1) of this clause.] The Contractor represents that—

(i) It □ is, □ is not a HUBZone small business concern listed, on the date of this rerepresentation, on the List of Qualified HUBZone Small Business Concerns maintained by the Small Business Administration, and no material changes in ownership and control, principal office, or HUBZone employee percentage have occurred since it was certified in accordance with 13 CFR part 126; and

(ii) It □ is, □ is not a HUBZone joint venture that complies with the requirements of 13 CFR part 126, and the rerepresentation in paragraph (g)(8)(i) of this clause is accurate for each HUBZone small business concern participating in the HUBZone joint venture. [*The Contractor shall enter the names of each of the HUBZone small business concerns participating in the HUBZone joint venture:* _____] Each HUBZone small business concern participating in the HUBZone joint venture shall submit a separate signed copy of the HUBZone rerepresentation.

[*Contractor to sign and date and insert authorized signer's name and title.*]

(h) If the Contractor represented that it was a small business concern prior to award of this contract, the Contractor shall rerepresent its size and socioeconomic status according to paragraph (e) of this clause or, if applicable, paragraph (g) of this clause, when the contracting officer explicitly requires it for an order issued under a multiple-award contract.

(End of clause)

■ 87. Amend section 52.219–29 by—

■ a. Revising the introductory text and the date of the clause;

■ b. Removing from paragraph (b)(1) ''or reserved'';

■ c. Revising the heading of paragraph (d);

■ d. Removing paragraph (f);

■ e. Redesignating paragraph (e) as paragraph (f); and

■ f. Adding new paragraph (e).

The addition and revisions to read as follows:

52.219–29 Notice of Set-Aside for, or Sole Source Award to, Economically Disadvantaged Women-Owned Small Business Concerns.

As prescribed in 19.1508(a), insert the following clause:

Notice of Set-Aside for, or Sole Source Award to, Economically Disadvantaged Women-Owned Small Business Concerns (Date)

* * * * *

(d) *Limitation on subcontracting.* * * *

(e) An EDWOSB concern shall comply with the limitation on subcontracting as follows:

(1) For contracts, in accordance with (b)(1) and (2) of this clause—

[*Contracting Officer check as appropriate.*]

_By the end of the base term of the contract and then by the end of each subsequent option period; or

_By the end of the performance period for each order issued under the contract.

(2) For set-aside orders, in accordance with (b)(3) of this clause, by the end of the performance period for the order.

* * * * *

■ 88. Amend section 52.219–30 by—

■ a. Revising the introductory text and the date of the clause;

■ b. Removing from paragraph (b)(1) ''or reserved'';

■ c. Revising the heading of paragraph (d);

■ d. Removing paragraph (f);

■ e. Redesignating paragraph (e) as paragraph (f); and

■ f. Adding new paragraph (e).

The additions and revisions to read as follows:

52.219–30 Notice of Set-Aside for, or Sole Source Award to, Women-Owned Small Business Concerns Eligible Under the Women-Owned Small Business Program.

As prescribed in 19.1508(b), insert the following clause:

Notice of Set-Aside for, or Sole Source Award to, Economically Disadvantaged Women-Owned Small Business Concerns Eligible Under The Women-Owned Small Business Program (Date)

* * * * *

(d) *Limitation on subcontracting.* * * *

(e) A WOSB concern eligible under the WOSB Program shall comply with the limitation on subcontracting as follows:

(1) For contracts, in accordance with (b)(1) and (2) of this clause—

[*Contracting Officer check as appropriate.*]

_By the end of the base term of the contract and then by the end of each subsequent option period; or

_By the end of the performance period for each order issued under the contract.

(2) For set-aside orders, in accordance with (b)(3) of this clause, by the end of the performance period for the order.

* * * * *

■ 89. Add section 52.219–XX to read as follows:

52.219–XX Notice of Small Business Reserve.

As prescribed in 19.507(g), insert the following clause:

Notice of Small Business Reserve (Date)

(a) *Applicability.* This clause applies only to contracts that have been reserved for any of the small business concerns identified at 19.000(a)(3). The small business program eligibility requirements apply.

(b) *General.* (1) This solicitation contains a reserve for one or more small business concerns identified at 19.000(a)(3) and the applicable small business program.

(2) The small business concern(s) eligible for participation in the reserve shall submit one offer to include all portions of the solicitation for which consideration for award is wanted. Award of the contract will be based on criteria identified elsewhere in the solicitation.

(c) If there are two or more contract awards to small businesses as a result of the reserve, the Contracting Officer may, at his or her discretion, set aside an order or orders for the small business concerns identified in 19.000(a)(3) and the applicable small business program, that were awarded contracts under a reserve, provided the requirements of 19.502–2(b) are met.

(d) If there is only one contract award to a small business as a result of the reserve, the Contracting Officer may, at his or her discretion, issue an order or orders directly to the small business concern.

(End of clause)

■ 90. Add section 52.219–YY to read as follows:

52.219–YY Nonmanufacturer Rule.

As prescribed in 19.507(h)(1), insert the following clause:

Nonmanufacturer Rule (DATE)

(a) This clause does not apply to the unrestricted portion of a partial set-aside.

(b) *Applicability.* This clause applies to contracts that have been set aside, in total or in part, or orders under multiple-award contracts as described in 8.405–5 and 16.505(b)(2)(i)(F) that have been set aside, for any of the small business concerns identified in 19.000(a)(3).

(c)(1) The contractor shall—

(i)(A) Provide the end item of a small business manufacturer, that has been manufactured or produced in the United States or its outlying areas; or

(B) If this procurement is an order as described in 8.405–5 or 16.505(b)(2)(i)(F) or processed under simplified acquisition procedures (see part 13), and the total amount does not exceed $25,000, provide the end item of any domestic manufacturer;

(ii) Not exceed 500 employees;

(iii) Be primarily engaged in the retail or wholesale trade and normally sell the type of item being supplied; and

(iv) Take ownership or possession of the item(s) with its personnel, equipment or facilities in a manner consistent with industry practice.

(2) In addition to the requirements set forth in (c)(1) of this clause, when the end item being acquired is a kit of supplies or other goods, 50 percent of the total value of the components of the kit shall be manufactured in the United States or its outlying areas by small business concerns. Where the Government has specified an item for the kit which is not produced by U.S. small business concerns, such items shall be excluded from the 50 percent calculation. See 13 CFR 121.406(c) for further information regarding nonmanufacturers.

(3) For size determination purposes, there can be only one manufacturer of the end product being acquired. For the purposes of the nonmanufacturer rule, the manufacturer of the end product being acquired is the concern that transforms raw materials and/or miscellaneous parts or components into the end product. Firms which only minimally alter the item being procured do not qualify as manufacturers of the end item, such as firms that add substances, parts, or components to an existing end item to modify its performance will not be considered the end item manufacturer, where those identical modifications can be performed by and are available from the manufacturer of the existing end item. See 13 CFR 121.406 for further information regarding manufacturers.

(End of clause)

Alternate I (DATE). As prescribed in 19.507(h)(2), substitute the following paragraph in place of paragraph (c)(1)(i)(A) of the basic clause:

(i)(A) Provide the end item of a HUBZone small business manufacturer, that has been manufactured or produced in the United States or its outlying areas; or

[FR Doc. 2016–28432 Filed 12–5–16; 8:45 am]

BILLING CODE 6820–EP–P

Reader Aids

Federal Register

Vol. 81, No. 234

Tuesday, December 6, 2016

CUSTOMER SERVICE AND INFORMATION

Federal Register/Code of Federal Regulations	
General Information, indexes and other finding aids	**202–741–6000**
Laws	**741–6000**
Presidential Documents	
Executive orders and proclamations	**741–6000**
The United States Government Manual	**741–6000**
Other Services	
Electronic and on-line services (voice)	**741–6020**
Privacy Act Compilation	**741–6050**
Public Laws Update Service (numbers, dates, etc.)	**741–6043**

ELECTRONIC RESEARCH

World Wide Web

Full text of the daily Federal Register, CFR and other publications is located at: **www.fdsys.gov.**

Federal Register information and research tools, including Public Inspection List, indexes, and Code of Federal Regulations are located at: **www.ofr.gov.**

E-mail

FEDREGTOC (Daily Federal Register Table of Contents Electronic Mailing List) is an open e-mail service that provides subscribers with a digital form of the Federal Register Table of Contents. The digital form of the Federal Register Table of Contents includes HTML and PDF links to the full text of each document.

To join or leave, go to **https://public.govdelivery.com/accounts/USGPOOFR/subscriber/new**, enter your email address, then follow the instructions to join, leave, or manage your subscription.

PENS (Public Law Electronic Notification Service) is an e-mail service that notifies subscribers of recently enacted laws.

To subscribe, go to **http://listserv.gsa.gov/archives/publaws-l.html** and select *Join or leave the list (or change settings);* then follow the instructions.

FEDREGTOC and **PENS** are mailing lists only. We cannot respond to specific inquiries.

Reference questions. Send questions and comments about the Federal Register system to: **fedreg.info@nara.gov**

The Federal Register staff cannot interpret specific documents or regulations.

CFR Checklist. Effective January 1, 2009, the CFR Checklist no longer appears in the Federal Register. This information can be found online at **http://bookstore.gpo.gov/.**

FEDERAL REGISTER PAGES AND DATE, DECEMBER

86555–86904 1
86905–87408 2
87409–87800 5
87801–88096 6

CFR PARTS AFFECTED DURING DECEMBER

At the end of each month the Office of the Federal Register publishes separately a List of CFR Sections Affected (LSA), which lists parts and sections affected by documents published since the revision date of each title.

3 CFR

Proclamations:
9547 87397
9548 87399
9549 87401
Executive Orders:
13749 87391
13750 87393

5 CFR

330 86555
532 86561
731 86555
890 86905
894 86905
9801 86563
Proposed Rules:
890 ..... 86898, 86902

7 CFR

6 87801
944 87409
980 87409
999 87409
Proposed Rules:
33 87486
35 87486
271 86614
272 86614
273 86614
944 87849
980 87849
999 87849

10 CFR

2 86906
10 86906
26 86906
30 86906
40 86906
50 86906
55 86906
61 86906
63 86906
70 86906
71 86906
72 86906
73 86906
74 86906
100 86906
Proposed Rules:
430 87493

12 CFR

370 87734

14 CFR

25 86910
39 ..... 86567, 86912, 87412, 87417, 87419, 87422
71 ..... 86570, 87802
Proposed Rules:
39 ..... 86627, 86630, 86975, 86977, 87494, 87496, 87499
71 ..... 86633, 87856

15 CFR

730 87424
740 86571
747 87424
748 ..... 87424, 87426
762 87424
774 87424
922 87803

16 CFR

306 86914

18 CFR

35 87770
375 86573
388 86573

19 CFR

12 ..... 87804, 87805
201 86575

20 CFR

404 ..... 86915, 86928
Proposed Rules:
401 86979

21 CFR

882 87810

22 CFR

120 87427
121 87427
122 87427
124 87427
126 87427
127 87427

23 CFR

630 86924
635 86924

24 CFR

5 87812
91 ..... 86947, 87812
92 ..... 86947, 87812
93 87812
200 87812
247 87812
574 87812
576 87812
578 87812
880 87812
882 87812
883 87812
884 87812
886 87812
891 87812
905 87812
960 87812

965 87430
966 ....87430, 87812
982 87812
983 87812

25 CFR

140 86953
141 86953
211 86953
213 86953
225 86953
226 86953
227 86953
243 86953
249 86953
Proposed Rules:
15 87501

26 CFR

1 ....86953, 87444
300 86955
602 87444
Proposed Rules:
1 87502

27 CFR

Proposed Rules:
9 86980

28 CFR

36 87348

29 CFR

38 87130
Proposed Rules:
1904 86987
1910 86987
1915 86987
1926 86987

31 CFR

1010 86577

32 CFR

208 87448

33 CFR

100 87454
117 ....86579, 87454, 87455, 87812
165 87813

37 CFR

380 87455
Proposed Rules:
201 ....86634, 86643, 86656
202 ....86634, 86643, 86656

40 CFR

52 ....87815, 87817, 87819
82 86778
180 ....86579, 86580, 86960, 87456, 87463
228 87820
Proposed Rules:
49 86988
52 ....86662, 86664, 87503, 87857
63 87003
81 86664
152 87509
153 87509
155 87509
156 87509
160 87509
165 87509
168 87509
170 87509
172 87509

43 CFR

Proposed Rules:
30 87501

44 CFR

64 ....87467, 87470

45 CFR

1302 87843

47 CFR

1 86586
25 86586
64 87274
73 86586
74 86586
Proposed Rules:
54 87861

48 CFR

Proposed Rules:
2 88072
4 88072
7 88072
8 88072
9 88072
10 88072
13 88072
15 88072
16 88072
19 88072
42 88072
52 88072

49 CFR

382 87686
383 87686
384 87686
391 87686
1250 87472
Proposed Rules:
172 87510
175 87510
236 88006
238 88006
390 86673
391 86673
571 86684

50 CFR

300 86966
622 ....86970, 86971, 86973
648 87844
660 87845
Proposed Rules:
17 ....87246, 87529
648 ....86687, 87862
679 ....87863, 87881

LIST OF PUBLIC LAWS

Note: No public bills which have become law were received by the Office of the Federal Register for inclusion in today's **List of Public Laws**.

Last List December 1, 2016

Public Laws Electronic Notification Service (PENS)

PENS is a free electronic mail notification service of newly enacted public laws. To subscribe, go to *http://listserv.gsa.gov/archives/publaws-l.html*

Note: This service is strictly for E-mail notification of new laws. The text of laws is not available through this service. **PENS** cannot respond to specific inquiries sent to this address.